2013

AIR CONDITIONING
CLIMATISATION
KLIMATECHNIK
CLIMATIZACIÓN
CLIMATIZAÇAO
CLIMATIZZAZIONE
AIR CONDITIONING
KLIMATYZACJA
Система
кондиционирования
воздуха
KLIMATIZACE
LÉGKONDÍCIONÁLÓ
BERENDEZÉS
CLIMATIZARE
KLIMA SISTEMI
Κλιματισμός

www.valeoservice.com

*WANT TO KNOW MORE?**

*en savoir plus

*La technologie automobile, naturellement

valeo added™

Automotive technology, naturally

Valeo

Air Quality Concept

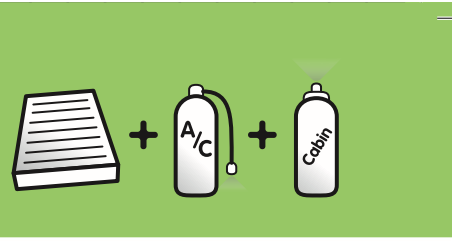

COMFORT

Particle filter

- FR Filtre à particules
- DE Partikelfilter
- SP Filtro de partículas
- PT Filtro de partículas
- IT Filtro particellare
- NL Deeltjesfilter
- PL Filtr przeciwpyłkowy
- RU Угольный фильтр
- CZ Částicový filtr
- RO Filtru de particule
- TU Parçacık filtresi
- GR Φίλτρα σωματιδίων

PROTECT

Combined filter with active carbon

- FR Filtre combiné avec charbon actif
- DE Kombifilter mit Aktivkohle
- SP Combinado con carbón activo
- PT Combinado com carvão activo
- IT Combinato con carboni attivi
- NL Gecombineerd filter met actieve koolstof
- PL Filtr przeciwpyłkowy z aktywnym węglem
- RU Комбинированный фильтр с активированным углем
- CZ Kombinovaný filtr s aktivním uhlím
- RO Filtru combinat cu carbon activ
- TU Aktif karbonlu birleşik filtre
- GR Φίλτρα ενεργού άνθρακα

SUPREME

Polyphenol with active carbon

- FR Polyphénol avec charbon actif
- DE Polyphenol mit Aktivkohle
- SP Polifenol con carbón activo
- PT Polifenol com carvão activo
- IT Polifenoli con carboni attivi
- NL Polyfenolfilter met actieve koolstof
- PL Polifenol z aktywnym węglem
- RU Полифенол с активированным углем
- CZ Polyfenol s aktivním uhlím
- RO Polifenol cu carbon activ
- TU Aktif karbonlu Polifenol
- GR Πολυφενόλη με ενεργό άνθρακα

2502 Produits / Products / Produkte / Riferimenti / Referenties / Referencias / Referências / Produkty / Produs

175 Nouveau / New / Neu / Nuovo / Nieuw / Nuevo / Novo / Novy / Nou

10

HUILE FRIGORIFIQUE
OIL REFRIGERANT
KOMPRESSORÖL
ACEITE DE CLIMATIZACION
OLEO DE CLIMATIZAÇÃO
OLIO DI REFRIGERAZIONE
KOELMIDDEL OLIE
OLEJ SPRĘŻARKOWY
ХЛАДОГЕНТ
PAG OLEJ
ULEI FRIGORIFIC
SOGUTUCU YAG
Ψυκτικό λάδι

201

BOUTEILLE DÉSHYDRATANTE
CARTOUCHE DÉSHYDRATANTE
ACCUMULATEUR
RECEIVER DRYER
CARTRIDGE DRYER
ACCUMULATOR
TROCKNER
TROCKNERKARTUSCHE
AKKUMULATOR
FILTRO DESHIDRATANTE
CARTUCHO DESHIDRATANTE
ACUMULADOR
FILTRO SECO
ACCUMULATOR
FILTRO DISIDRATATORE
CARTUCCIA DISIDRATANTE
ACCUMULATORE
VOCHTAFSCHEIDER
FILTER DROGER CARTRIDGE
ACCUMULATOR
OSUSZACZ
ZBIORNIK CZYNNIKA
CHŁODZACEGO
ОСУШИТЕЛЬ
НАКОПИТЕЛЬ
VYSOUŠEČ
KAZETOVÝ SUŠIČ
SBĚRAČ
RECIPIENT USCATOR
CARTUŞ USCATOR
ACUMULATOR
NEM ALICI
KURUTUCU FIŞEŇI
AKÜMÜLATÖR
Ξηραντήρας (φιλτρόυγρού)
Ξηραντήρας τύλου φυσιγγίου
(κασέτα)
Συσσωρευτής

226

JOINT D'ÉTANCHÉITÉ
O'RING AND GASKET SEAL
DICHTUNG
JUNTA DE ESTANQUEIDAD
JUNTA DE ESTANQUEIDADE
O'RING E GUARNIZIONI DI TENUTA
DICHTINGEN
ZESTAW USZCZELEK I PIERŚCIENI
КОМПЛЕКТ ЗАЖИМОВ И
ПРОКЛАДОК
TĚSNĚNÍ A TĚSNÍCÍ KROUŽKY
GARNITURĂ
ORING VE DÜZ CONTALAR
Στεγανοποιητικά

9

CANALISATIONS
AC HOSES ASSEMBLY
KÄLTEMITTELLEITUNGEN
TUBERIAS A/C
TUBOS DE AR
CONDICIONADO
CANALIZZAZIONI CLIM
AIRCO-LEIDINGEN
PRZEWODY UKŁADU KLIMATYZACJI
Набор соединительныхтрубок СКВ
KLIMATIZAČNÍ HADICE
CONDUCTA
KLIMA HORTUMLARI
Σωληνώσεις AC

453

45 new

CONDENSEUR
CONDENSER
KONDENSER
KONDENSATOR
CONDENSADOR
CONDENSADOR
CONDENSATORE
CONDENSOR
SKRAPLACZ
КОНДЕНСЕР
KONDENZÁTOR
CONDENSATOR
KONDENSER
Συμπυκνωτής

489

48 new

FILTRE A AIR D'HABITACLE
CABIN AIR FILTER
INNENRAUM-LUFTFILTER
FILTRO HABITACULO
FILTRO DE HABITÁCULO
FILTRO ABITACOLO
INTERIEUR LUCHTFILTER
FILTR KABINOWY
KABINOVÝ FILTR
САЛОННЫЙ ФИЛЬТР
FILTRU AER DE HABITACLU
KABIN FILTRESI
φίλτρο Καμπίνας

ROLL MEDIA

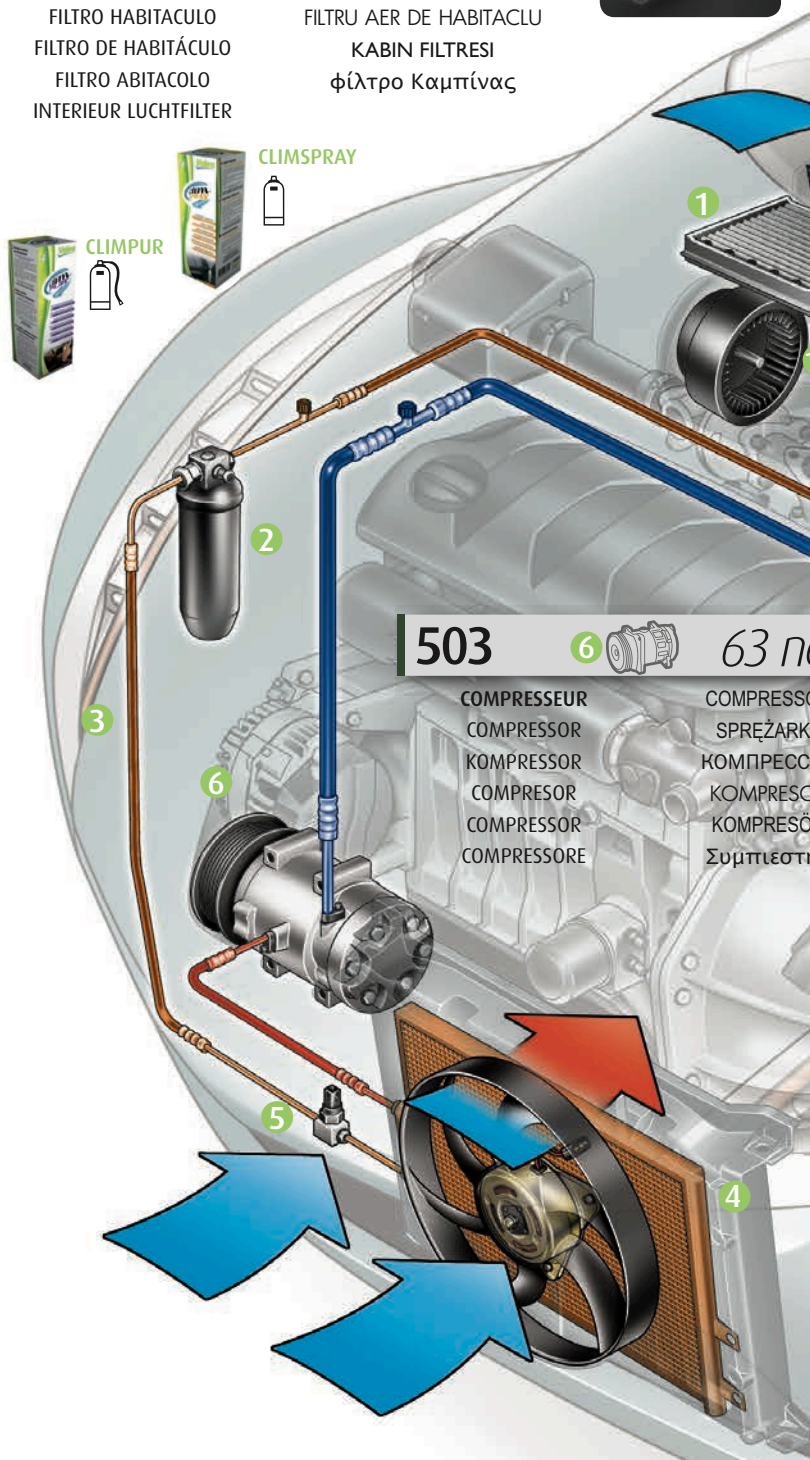

503

63 n

COMPRESSEUR
COMPRESSOR
KOMPRESSOR
COMPRESOR
COMPRESSOR
COMPRESSORE
COMPRESSO
SPRĘŻARK
КОМПРЕСС
KOMPRESO
KOMPRESÖ
Συμπιεστη

Réparation
Repair
Reparatur
Reparación
Reparar

Riparazione
Naprawa
Oprava
Reparație
Επισκευή

Crash
Crash

Choc avant
Front shock
Frontalschaden
Choque delantero
Choque dianteiro
Urto frontale

Uderzenie przednie
Přední náraz
Ciocnire față
Μετωπική σύγκρουση

Entretien
Maintenance

Maintenance
Maintenance
Mantenimiento
Manutenção
Wartung

Manutenzione
Konserwacja
Údržba
întreținere
Συντήρηση

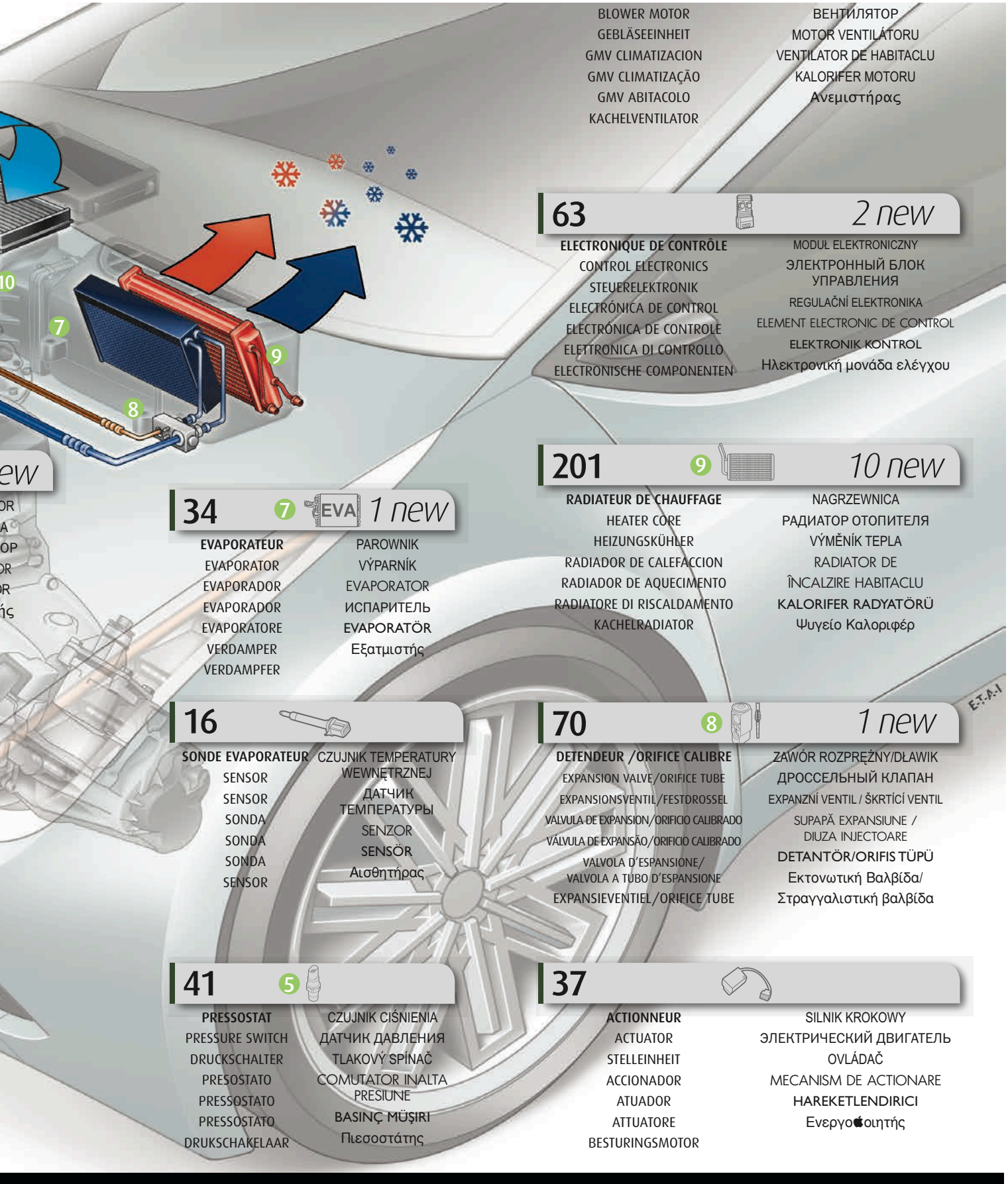

149 — 10 — 5 new

PULSEUR
BLOWER MOTOR
GEBLÄSEEINHEIT
GMV CLIMATIZACION
GMV CLIMATIZAÇÃO
GMV ABITACOLO
KACHELVENTILATOR

DMUCHAWA
ВЕНТИЛЯТОР
MOTOR VENTILÁTORU
VENTILATOR DE HABITACLU
KALORIFER MOTORU
Ανεμιστήρας

63 — 2 new

ELECTRONIQUE DE CONTRÔLE
CONTROL ELECTRONICS
STEUERELEKTRONIK
ELECTRÓNICA DE CONTROL
ELECTRÓNICA DE CONTROLE
ELETTRONICA DI CONTROLLO
ELECTRONISCHE COMPONENTEN

MODUŁ ELEKTRONICZNY
ЭЛЕКТРОННЫЙ БЛОК УПРАВЛЕНИЯ
REGULAČNÍ ELEKTRONIKA
ELEMENT ELECTRONIC DE CONTROL
ELEKTRONIK KONTROL
Ηλεκτρονική μονάδα ελέγχου

201 — 9 — 10 new

RADIATEUR DE CHAUFFAGE
HEATER CORE
HEIZUNGSKÜHLER
RADIADOR DE CALEFACCION
RADIADOR DE AQUECIMENTO
RADIATORE DI RISCALDAMENTO
KACHELRADIATOR

NAGRZEWNICA
РАДИАТОР ОТОПИТЕЛЯ
VÝMĚNÍK TEPLA
RADIATOR DE ÎNCALZIRE HABITACLU
KALORIFER RADYATÖRÜ
Ψυγείο Καλοριφέρ

34 — 7 — EVA — 1 new

EVAPORATEUR
EVAPORATOR
EVAPORADOR
EVAPORADOR
EVAPORATORE
VERDAMPER
VERDAMPFER

PAROWNIK
VÝPARNÍK
EVAPORATOR
ИСПАРИТЕЛЬ
EVAPORATÖR
Εξατμιστής

16

SONDE EVAPORATEUR
SENSOR
SENSOR
SONDA
SONDA
SONDA
SENSOR

CZUJNIK TEMPERATURY WEWNĘTRZNEJ
ДАТЧИК ТЕМПЕРАТУРЫ
SENZOR
SENSÖR
Αισθητήρας

70 — 8 — 1 new

DETENDEUR /ORIFICE CALIBRE
EXPANSION VALVE/ORIFICE TUBE
EXPANSIONSVENTIL/FESTDROSSEL
VALVULA DE EXPANSION/ORIFICIO CALIBRADO
VÁLVULA DE EXPANSÃO/ORIFICIO CALIBRADO
VALVOLA D'ESPANSIONE/ VALVOLA A TUBO D'ESPANSIONE
EXPANSIEVENTIEL/ORIFICE TUBE

ZAWÓR ROZPRĘŻNY/DŁAWIK
ДРОССЕЛЬНЫЙ КЛАПАН
EXPANZNÍ VENTIL / ŠKRTÍCÍ VENTIL
SUPAPĂ EXPANSIUNE / DIUZA INJECTOARE
DETANTÖR/ORIFIS TÜPÜ
Εκτονωτική Βαλβίδα/ Στραγγαλιστική βαλβίδα

41 — 5

PRESSOSTAT
PRESSURE SWITCH
DRUCKSCHALTER
PRESOSTATO
PRESSOSTATO
PRESSOSTATO
DRUKSCHAKELAAR

CZUJNIK CIŚNIENIA
ДАТЧИК ДАВЛЕНИЯ
TLAKOVÝ SPÍNAČ
COMUTATOR INALTA PRESIUNE
BASINÇ MÜŞIRI
Πιεσοστάτης

37

ACTIONNEUR
ACTUATOR
STELLEINHEIT
ACCIONADOR
ATUADOR
ATTUATORE
BESTURINGSMOTOR

SILNIK KROKOWY
ЭЛЕКТРИЧЕСКИЙ ДВИГАТЕЛЬ
OVLÁDAČ
MECANISM DE ACTIONARE
HAREKETLENDIRICI
Ενεργοποιητής

E.T.A.I

Valeo

	Vehicle Véhicule Fahrzeug Vehículo Viatura Veicolo Voertuig Pojazd Транспортное средство Vozidlo Gépjármű Vehicul **Araç** Οχημα	E	Petrol Essence Benzin Gasolina Gasolina Benzina Benzine Benzyna Бензин Benzín Benzin Benzină **Benzin** Βενζίνη	+/-	With / Without Avec / sans Mit / Ohne Con / Sin Com / Sim Con / Senza Met of zonder Z / Bez с/без S / Bez Vele együtt/nélküle Cu / fără **Var/Yok** με / χωρίς
	Date of vehicle Période de fabrication Baujahr Periodo de fabricación Periodo de fabricação Periodo di fabbricazione Bouwjaar Data produkcji Год производства Datum výroby Gyártási év Data de producţie **Araç üretim tarihi** Ημερομηνία κατασκευής	L x H	Dimensions Dimensions Abmessungen Dimensiones del Panal Dimençoes de panal Dimensioni Afmetingen Rozmiary Размеры Rozměry Hengerűrtartalom Dimensiuni **Ölçüler** Διαστάσεις	A+	Auto Air Conditionning Climatisation Automatique Fzg. mit Klimaautomatik Climatización Automática Climatização Automática AC automatica Automatische airconditioning Klimatyzacja automatyczna Климат контроль Automatická klimatizace Automata légkondícionáló Climatizare automata **Otomatik klima** Αυτόματος κλιματισμός
	Engine Moteur Motor Motor Motor Motore Motor Silnik Двигатель Motor Motor típus Motor **Motor** Κινητήρα	CC	Capacity Cylindrée Hubraum Cilindrada Cilindrada Cilindrata Cilinderinhoud Pojemność silnika Рабочий объем двигателя Objem Teljesítmény Putere **Silindir hacmı** Κυβικά	M+	Manual Air Conditionning Climatisation Manuelle Fzg. mit manueller Klimaanlage Climatización Manual Climatização Manual AC manuale Manuele airconditioning Klimatyzacja manualna Кондиционер с ручным управлением Mechanická klimatizace Manuális légkondícionáló Climatizare manuala **Manuel klima** Χειροκίνητος κλιματισμός
	Page number N° de page Seite Número de Página Número de página N° di pagina Pagina Numer strony Номер страницы Stránka Oldal szám Numar de pagină **Sayfa numarası** ΝΓ σελίδας	FACELIFT	Facelift Restylage Fzg. mit Facelift Restylinig Restyling Restyling Restyling Facelift Фейслифт Model Karosszéria változat Înnoire **Yeni tasarım** Restyling	▸ N°	Until chasis N° Jusqu'au Châssis N° Bis Fahrgestellnummer -> Hasta Nº de chasis Até nº de chasis Sino al telaio N° Tot chassisnummer Do numeru nadwozia До номера шасси Do čísla karoserie Alvázszámig Puna la ţasiul cu numarul **… şasi numarasına kadar** μέχρι σασί ΝΓ
	Images Images Abbildungen Foto / Esquemas Foto / Esquema Immagini Afbeeldingen Ilustracja Изображения Zobrazení Képek Imagini **Resim** Εικόνες	+	**A/C** With Avec Mit Con Com Con Met Z c S Vele együtt Cu **Var** με	N° ▸	From chasis N° A partir du Châssis N° Ab Fahrgestellnummer A partir del Nº de chasis ->
A partir de nº de chasis A partire dal telaio N° Vanaf chassisnummer Od numeru nadwozia С номера шасси Od čísla karoserie Alvázszámtól Pornind dela ţasiul numerul **… şasi numarasından sonra** Από σασί ΝΓ
D	Diesel Diesel Diesel Diesel Diesel Diesel Diesel Diesel Diesel Дизель Diesel Diesel **Dizel** Πετρέλαιο	-	Without Sans Ohne Sin Sim Senza Zonder Bez без Bez Nélküle Fără **Yok** χωρίς	(-)	Except Sauf Exklusive Excepto Excepto Ad eccezione di Zonder Z wyjątkiem Кроме S vyjímkou Kivéve Cu excepţia **Hariç** Εκτός από

(+)	With Y compris Inklusive Con Com Con Inclusief Zawiera c S Vele együtt Inclus **Dahil** Συμπεριλαμβανομένου		Left Hand Drive or Right Hand Conduite à droite ou à gauche Links- oder Rechtslenker Conducción a Derechas e Izquierdas Condução a direita e esquerda Guida a destra o a sinistra Links of rechts gestuurd Ruch lewo/prawo stronny Автомобили с рулем справа или слева Řízení v levo nebo v pravo Jobb- és balkormányos kivitelhez egyaránt Condurece la dreaptă sau la stânga **Sağ ya da soldan direksiyon** Δεξιοτίμονο η Αριστεροτίμονο	Main condenser	Main Condenser Condenseur principal Hauptkondensator Condensador principal Condensador principal Condensatore principale Hoofd condensor Skraplacz główny Основной конденсор Hlavní kondenzátor Fő légkondícionáló hűtő Condensatorul principal **Ana kondenser** Κύριος συμπυκνωτής
Rear	Rear Arrière Hinten Posterior Posterior Posteriore Achter Tylny Задний Zadní Hátsó Spate **Arka** Πίσω		Valeo New Part Number Nouvelles références Neuaufnahme Nuevas Referencias Novas referências Nuovi riferimenti Nieuwe referenties Nowa referencja Новые артикулы Nové katalogové číslo Új cikkszám Noile referinte **Yeni referans** Νέους κωδικούς	Dual A/C	Dual A/C Double système de climatisation Duales Klimasystem Sistema de climatización dual Sistema de climatização duplo Doppio sistema di climatizzazione Gescheiden airco systeem Podwójna klimatyzacja Двойная система кондиционирования Duální klimatizace Kétzónás légkondícionáló berendezés Dublu sistem de climatizare **Çift klima sistemi** Διπλό σύστημα κλιματισμού
HP	High Performance Haute Performance Hochleistung Altas prestaciones Altas Prestações Elevata prestazione High Performance Wysoka wydajność Высокая эффективность Vysoký výkon Nagyteljesítményű változat Mare performanță **Yüksek performans** Υψηλής απόδοσης	●	Soon available P/N Références disponibles prochainement Artikel in Kürze lieferbar Referencias disponibles próximamente Referências disponiveis próximamente Riferimenti disponibili nei prossimi mesi Binnenkort leverbaar Produkt wkrótce dostępny Артикулы скоро будут доступны Produkt brzy dostupny Hamarosan érkező termék Referințele disponibile în curând **Yakında sunulacak** Κωδικούς σύντομα διαθέσιμα	Rear condenser	Rear Condenseur Condenseur arrière Hinterer Kondensator Condensador trasero Condensador traseiro Condensatore posteriore Achter condensor Skraplacz tylny вспомогательный конденсор Zadní kondenzátor Hátsó légkondícionáló hűtő Condensatorul din spate **Arka Kondenser** Πίσω συμπυκνωτής
R12 ▸ R134a	R12->R134a = Retrofit operation R12->R134a = Opération Retrofit R12-> R134a Retrofit R12->R134a = Operación Retrofit R12->R134a = Operação de conversão R12->R134a = Operazione Retrofit R12->R134a = Retrofit R12->R134a = zamiana czynnika Операция замены хладагента R12 на R134A R12- R134a = Lepší účinek R12-R13 Retrofit változat R12->R134a = Operaţie Retrofit **R12->R134a = Retrofit işlemi** R12->R134a = λειτουργία Retrofit	▲	Cancelled Supprimée Nicht mehr lieferbar Suprimida Anulada Annullato Niet meer leverbaar Produkt niedostępny Выведены из ассортимента Vyřazeno Törölt cikk Radiat **İptal** Καταργήθηκε	Multi-Exchanger	Multi-Exchanger Multi-échangeur Multi-Wärmetauscher Multi-intercambiador Multi-permutador Multi-scambiatore Multi-Exchanger Multi-Exchanger Теплообменник Kombinovaný výměník Többfunkciós hőcserélő Multi schimbator **Çok amaçlı soğutucu** Πολυ-εναλλάκτης
	Right Hand Drive Conduite à droite Rechtslenker Conducción a Derechas Condução a direita Guida a destra Rechts gestuurd Kierownica z prawej strony Автомобили с рулем справа Volant v pravo Jobbkormányos kivitel Conducere dreaptă **Sağdan direksiyon** Δεξιοτίμονο	➜	Replaced Remplacée Ersetzt Sustituida Trocada Sostituito Vervangen Produkt zamieniony Заменены Nahrazeno Helyettesített cikk Inlocuit **Değişmiş** Αντικατεστημένος		With receiver drier Avec filtre déshydratant Mit Trockner Con filtro deshidratante Com Filtro Seco Con filtro disidratatore Met filter/droger Z osuszaczem С осушителем S vysoušecím filtrem Szárító szűrővel Cu uscator **Kurutucu ile birlikte** Με φίλτρο αφύγρανσης
	Left Hand Drive Conduite à gauche Linkslenker Circulación a Izquierdas Circulação a esquerda Guida a sinistra Links gestuurd Kierownica z lewej strony Автомобили с рулем слева Volant v levo Balkormányos kivitel Conducure stânga **Soldan direksiyon** Αριστεροτίμονο		Remanufactured Echange Standard Austauschteil Intercambiable Troca padrão Rigenerato Ruilsysteem Produkt zamienny Восстановленные детали Změněno Felújított cikk Renovat **Yenilenmiş** Ανακατασκευή	Kit	 Kit Kit Set Kit Kit Kit Kit Zestaw Комплект sada Szett Kit **Takım** Σετ

Cartridge Drier
Cartouche Déshydratante
Trocknereinsatz (Kartusche)
Cartucho Deshidratante
Cartucho Filtro Seco (desidratante)
Cartuccia disidratante
Filter Droger patroon
Wkład osuszacza
Картридж осушителя
Náplň vysoušeče
Szárító patron
Cartuț uscator
Kurutucu fişeği
Φίλτρο υγρού (κασέτα)

IN
Entrée
Eingang
Entrada
Entrada
Entrata
Ingang
Wlot
вход
do
Bemenet
Intrare
Giriş
Είσοδος

OUT
Sortie
Ausgang
Salida
Saída
Uscita
Uitgang
Wylot
выход
Z/Ven
Kimenet
Ieţire
Çıkış
Έξοδος

Male
Mâle
Männlich
Macho
Macho
Maschio
Mannelijk
Męski
Разъем типа "папа"
Zástrčka
Külső menet
Bărbătesc
Erkek
Αρσενικό

Female
Femelle
Weiblich
Hembra
Femea
Femmina
Vrouwelijk
Żeński
Разъем типа "мама"
Zásuvka
Belső menet/anyacsavar
Femelă
Dişi
Θηλυκό

Connector
Connecteur
Verbinder
Conector
Conector
Connettore
Connector
Złącze
соединитель
Konektor
Csatlakozó
Conector
Bağlantı
Συνδετήρας

Pressure switch port
Pressure Switch Connector
Connecteur Pressostat
Schalteranschluss
Toma de presostato
Tomada de pressostato
Connettore pressostato
Connector drukschakelaar
Gniazdo czujnika ciśnienia
Гнездо для установки датчика давления
Konektor snímače tlaku
Nyomáskapcsoló csatlakozó
Conector comutator inalta presiune
Basınç müşir bağlantısı
Συνδετήρας πιεσοστάτη

Pressure connector
Pressure connector
Connecteur de pression
Druckverbinder
Conector de presión
Conector de pressão
Connettore di pressione
Hogedruk connector
Złącze ciśnieniowe
Соединитель
tlakový konektor
Nyomáscsatlakozó
Conector de presiune
Basınç bağlantısı
Συνδετήρας πίεσης

Sight glass
Sightglass
Voyant Liquide
Schauglas
Testigo de fluido
Avisador de fluído
Spia liquido
Kijkglas
Okienko rewizyjne
Смотровое стекло
Skleněný průzor
Kémlelőablak
Indicator lichid
Gözetleme penceresi
Θυρίδα ελέγχου

AC Hoses assembly
Canalisations Clim
Kältemittelleitungen
Tuberias A/C
Tubos de Ar Condicionado
Canalizzazioni Clim
Airco-leidingen
Przewody układu klimatyzacji
Соединительных трубки кондиционера
komplet A/C hadic
Összeszerelt légkondícionáló cső
Conducta clima
Klima boruları
Σωληνώσεις κλιματισμού

Condenser inlet / Compressor outlet
Entrée Condenseur/ Sortie Compresseur
Ingang Condensor/Uitgang compressor
Entrada Condensador / Salida Compresor
Entrada condensador / Saída compressor
Ingresso Condensatore / Uscita Compressore
Kondensator Einlass / Kompressor Auslass
Wlot skraplacza / Wylot sprężarki
на входе в конденсор/ на выходе из компрессора
Vstup kondenzátoru / výstup kompresoru
Klímahűtő bemenet/kompresszor kimenet
Intrarea condensator / ieţirea compresor
Kondenser girişi/Kompresör çıkışı
Είσοδος Συμπυκνωτή / Εξοδος Συμπιεστή

Condensor outlet
Sortie Condenseur
Kondensator Auslass
Salida del Condensador
Saída Condensador
Uscita Condensatore
Uitgang condensor
Wylot skraplacza
на выходе из конденсора
Výstup kondenzátoru
Klímahűtő kimenet
Ieţirea condensator
Kondenser çıkışı
Εξοδος Συμπυκνωτή

Orifice Tube
Orifice Calibré
Festdrossel
Orificio Calibrado
Buraco calibrado
Valvola a tubo d'espansione
Orifice tube
Dławik
Капиллярная трубка
Pevný škrtící ventil
Áteresztő cső
Diuza injectoare
Orifis tüpü
Σωλήνα εκτονωτική βαλβίδα

Blue
Bleu
Blau
Azul
Azul
Blu
Blauw
Niebieski
Синий
Modrá
Kék
Albastru
Mavi
Μπλε

Green
Vert
Grün
Verde
Verde
Verde
Groen
Zielony
Зеленый
Zelená
Zöld
Verde
Yeşil
Πράσινο

Grey White
Gris Blanc
Grau/weiss
Gris Blanco
Gris Branco
Grigio Bianco
Grijs Wit
Szaro-biały
Серо-белый
Šedo / bílá
Szürke-fehér
Gri albă
Gri Beyaz
Γκρι Άσπρο

Orange
Orange
Orange
Naranja
Laranja
Arancione
Oranje
Pomarańczowy
Оранжевый
Oranžová
Narancssárga
Portocaliu
Turuncu
Πορτοκαλί

Orange White	Orange White Orange Blanc Orange/weiss Naranja Blanco Laranja Branco Arancione Bianco Oranje Wit Pomarańczowo-biały Оранжево-белый Oranžovo / bílá Narancssárga-fehér Portocaliu albă **Turuncu Beyaz** Πορτοκαλί Άσπρο	Connected strut	EVA Connected strut Entretoise Assemblée Verbindungsstrebe Casquillo Casquillo Connettore Tussenstuk Rozpórka mocująca С креплением Spojovací vzpěra Összekapcsolt felfüggesztőegység Support **Birleşik bağlantı** Σύνδεσμος		Number of pulley groves Nombre de gorges poulies Anzahl der Rillen der Riemenscheibe Número de canales de la polea Numero de estrias da polia Numero di gole della puleggia Aantal groeven op de riemschijf Ilość rowków na kole pasowym количество ручьев на шкиве Počet drážek řemenice Ékszíjtárcsa horonyszám Numar de striuri pe scripete **Kasnak kanal sayısı** Αριθμός δοντιών τροχαλίας
Purple	Purple Violet Violett Violeta Violeta Viola Paars Fioletowy Лиловый Fialová Lila Violet **Mor** **Μωβ**	Connecting adapter	Connecting Adapter Conduit de liaison Verbindung Adaptador para conexión Adaptador para conecção Adattatore di connessione Verbindingsslang Złączka Соединительный адаптер Spojovací adapter Csatlakozó közbetét Adaptator de conectare **Yönlendirme parçası** Προσαρμοστής για σύνδεση	MIN	MIN = Mineral Oil MIN = Huile Minérale MIN = Mineralisches Öl MIN = Aceite Mineral MIN = Óleo Mineral MIN = Olio Minerale MIN = Minerale olie MIN = olej mineralny минеральное масло MIN = Minerální olej MIN= ásványi olaj MIN = Ulei minerala **MIN = Mineral yağ** **MIN = Μεταλλικό λάδι**
Red	Red Rouge Rot Rojo Vermelho Rosso Rood Czerwony Красный Červená Vörös Roţu **Kırmızı** **Κόκκινο**	+	With Expansion Valve Avec Détendeur Inkl. Drosselventil Con Válvula de expansión Com Válvula de expanção Con valvola d'espansione Met ontspanner Z zaworem rozprężnym С расширительным клапаном S expanzním ventilem Táguló szeleppel Cu supapă de expansiune **Genleşme valfi ile birlikte** Με εκτονωτική βαλβίδα	PAG	PAG = PAG Oil PAG = Huile PAG PAG = PAG-Öl PAG = Aceite PAG PAG = Óleo PAG PAG = Olio PAG PAG = PAG olie PAG = olej PAG синтетическое масло PAG = PAG Olej PAG=PAG olaj PAG = Ulei PAG **PAG = PAG yağ** **PAG = λάδι PAG**
White	White Blanc Weiss Blanco Branco Bianco Wit Biały Белый Bílá Fehér Albă **Beyaz** **Άσπρο**	BF	With plastic housing Avec carter plastique Inkl. Kunststoffgehäuse Con Tapa de Plástico Com tapa de plástico Con protezione in plastica Met plastic huis Z plastikową obudową С пластиковым корпусом S plastovým krytem Műanyag házzal Cu o protecţie de plastic **Plastik gövdeli** **Με πλαστική επένδυση**	COMP. FIXE	Standard Compressor Compresseur Fixe Kompressor mit festem Hub Compresor de cilidrada fija Compresor de cilindrada fixa Compressore fisso Compressor met vaste cilinderinhoud Sprężarka standardowa Стандартный компрессор Kompresor s pevným zdvihem Normál kompresszor Compresor fix **Tek hızlı kompresör** **Συμπιεστής σταθερός**
White Black	White Black Blanc Noir Weiss/schwarz Blanco Negro Branco Preto Bianco Nero Wit Zwart Biało-czarny Черно-белый Bílo / černá Fekete-fehér Albă negru **Siyah Beyaz** **Άσπρο Μαύρο**	With diaphragm	With Diaphragm Avec Membrane Mit Membran Con membrana Membrana Membrana Met membraan Z membraną С мембраной S membránou Membránnal Cu membrană **Diyafram ile birlikte** **Με Μεμβράνη**	COMP. VAR.	Variable speed compressor Compresseur Variable Kompressor mit variablem Hub Compresor de cilindrada variable Compressor de cilindrada variavel Compressore variabile Compressor met variable cilinderinhoud Sprężarka ze zmienną wydajnością Компрессор с переменной скоростью Kompresor s variabilním zdvihem Változtatható sebességű kompresszor Compresor variabil **Değişken hızlı kompresör** **Συμπιεστής μεταβλητός**
Yellow White	Yellow White Jaune Blanc Gelb/weiss Amarillo Blanco Amarelo Branco Giallo Bianco Geel Wit Żółto-biały Желто-белый Žluto / bílá Sárga-fehér Galben albă **Sarı Beyaz** Κίτρινο Άσπρο	∅	Pulley Diameter (mm) Diamètre Poulie (mm) Durchmesser der Riemenscheibe (mm) Diametro de la Polea (mm) Diâmetro da polia Diametro puleggia Diameter Riemschijf (mm) Średnica koła pasowego (mm) диаметр шкива (мм) průměr řemenice (mm) Ékszíjtárcsa átmérő (mm) Diametru scripete (mm) **Kasnak çapı (mm)** διάμετρος τροχαλίας (mm)	FLANGE	Flange Bride Flansch Brida Rebordo Flangia Flens Kołnierz Фланец Příruba Perem Brida **Flanş** Φλάντζα

Valeo

+	With Auxiliary Heater Core Avec résistance additionnelle Mit Zusatzheizkörper Con resistencia de calefacción adicional Com resistência de sofagem adicional Con radiatore di riscaldamento ausiliare Met extra weerstand Z dodatkową nagrzewnicą С дополнительным отопителем S pomocným chladičem ohřevu Segéd fűtőradiátorral ellátott változat Cu rezistor adiţional **Harici kalorifer radyatörü ile** Με πρόσθετη αντίσταση	Middle pressure switch	Middle pressure switch Switch moyenne pression Schaltpunkt, mittlerer Druck Presostato de media presión Interruptor de média pressão Pressostato GMV Schakelaar midden druk Włącznik średniego ciśnienia Переключатель среднего давления Středotlaký spínač Közepes nyomású kapcsoló Comutator mediea presiune **Orta seviye basınç anahtarı** Διακόπτης μεσαίας πίεσης	100% activated carbon	100 % Activated Carbon Filter 100% Filtre à Charbon Actif 100% Aktivkohlefilter 100% Filtro de Carbón Activo 100% filtro de carvão activo 100% Filtro a carbone attivo 100% actieve koolstoffilter Filtr z aktywnym węglem Фильтр со 100% активированным углем Filtr se 100% aktivním uhlíkem Aktív szenes szűrő 100% Filtru cu cărbune activ **100% Karbon aktif filtre** Φίλτρο 100% ενεργού άνθρακα
+	Additional Fan Pulseur additionel Zusatzventilator GMV adicional GMV adicional Ventola addizionale Extra ventilator Dodatkowa dmuchawa дополнительный вентилятор přídavný větrák Segéd ventilátor Ventilator de habitaclu adiţional **İlave fan** Πρόσθετο ανεμιστήρας	High pressure switch	High pressure switch Switch haute pression Schaltpunkt, Maximaldruck Presostato de alta presión Interruptor de alta pressão Pressostato alta pressione Schakelaar hoge druk Włącznik wysokiego ciśnienia Переключатель высокого давления (ВД) Vysokotlaký spínač Magas nyomású kapcsoló Comutator inalta presiune **Yüksek basınç anahtarı** Διακόπτης υψηλής πίεσης	x2	2 Filters 2 Filtres 2 Innenraumluftfilter 2 Filtros 2 Filtros 2 Filtri 2 Filters Dwa filtry 2 фильтра 2 filtry 2 szűrő 2 Filtre **2 Filtre** 2 Φίλτρα
4 levels	4 levels 4 niveaux 4 Niveaus 4 niveles 4 níveis 4 livelli 4 niveaus 4 łopatki 4 уровня 4 úrovně 4 szint 4 nivele **4 seviye** 4 επίπεδα	Pressure sensor	Pressure sensor Sonde de pression Drucksensor Sensor de presión Sensor de pressão Pressostato Druk sensor Czujnik ciśnienia датчик давления Vysokotlaký senzor Nyomás érzékelő Senzor de presiune **Basınç müşiri** Αισθητήρας πίεσης	CENTRAL	Central Central Mittig Central Central Centrale Centraal Centralny Центральный Centrální Központi Central **Merkezi** Κεντρικό
Binary	Binary Binaire Zweipunkt Binario Binário Binary Binair Binarny двойной Duální Kettős Binar **İkili** Δυαδικός	PA	Particle Filter Filtre à Particules Pollenfilter Filtro de Partículas Filtro de Particulas Filtro particellare Interieurfilter Filtr przeciwpyłkowy Угольный фильтр Filtr pevných částic Részecske szűrő Filtru cu particule **Parçacık filtresi** Σωματιακό φίλτρο καμπίνας	LATERAL	Lateral Latéral Außen Lateral Lateral Laterale Lateraal Zewnętrzny/ Boczny Внешний Boczny Mellék Lateral **Yanal** Πλάγιο
Trinary	Trinary Trinaire Dreipunkt Trinario Trinário Trinary Trinair Trinarny тройной Trojný Háromszoros Trinar **Üçlü** Τριαδικός	CA	Combined Filter Filtre Combiné Aktivkohlefilter Filtro Combinado Filtro Combinado Filtro Combinato Gecombineerde filter Filtr przeciwpyłkowy kombinowany Комбинированный фильтр с активированным углем Kombinovaný filtr Kombinált szűrő Filtru combinat **Birleşik filtre** Συνδυασμένο φίλτρο καμπίνας	Ultrafine	Ultrafine ultrafin Ultrafein ultrafina ultrafina ultrafine ultrafijn ultrafine задержки сверхмелких частиц Ultrajemná Ultra fino ultrafinom ultrafin **Yüksek Filtreleme** υλερβολικά λεîτό
Low pressure switch	Low pressure switch Switch basse pression Schaltpunkt, Mindestdruck Presostato de baja presión Interruptor baixa pressão Pressostato bassa pressione Schakelaar lage druk Włącznik niskiego ciśnienia переключатель низкого давления (НД) Nízkotlaký spínač Alacsony nyomás kapcsoló Comutator scăzuta presiune **Düşük basınç anahtarı** Διακόπτης χαμηλής πίεσης	PCA	Polyphenol with active carbon Polyphénol avec charbon actif Polyphenol mit Aktivkohle Polifenol con carbón activo Polifenol com carvão activo Polifenoli con carboni attivi Polyfenolfilter met actieve koolstof Polifenol z aktywnym węglem Полифенол с активированным углем Polyfenol s aktivním uhlím Polifenol s aktivnim ugljenom Polyphenol aktív szénnel Polifenol cu carbon activ **Aktif karbonlu Polifenol** Πολυφενόλη με ενεργό άνθρακα		Additionnal resistance Résistance de Chauffage additionnelle Elektrischer Zusatzheizwiderstand Resistancia de Calefación Adicional Resistência de sofagem adicional Resistenza di riscaldamento addizionale Elek. Verwarmingsweerstand Dodatkowy rezystor grzejny Дополнительное электрическое сопротивление Dodatečný odpor Megnövelt ellenállóság Rezistor adiţional **İlave rezistant** Πρόσθετη αντίσταση θέρμανσης

Connecting hose	RAC Tubulure Stutzen Tobera Tubo Canalizzazioni Aanpassingskanaal Wąż łączący Соединительные трубки Spojovací hadice RAC Tub Bağlantı hortumu Σωληνώσεις
Mixage	Air mixing Mixage Luftmischer Mezcla Mistura Aria miscelata Warme / Koude lucht vermenging Mieszanie powietrza Смешивание воздуха Mísení vzduchu Levegő keverés Amestec de aer Hava karışımı Μείξη του αέρα
BIP	Bipolar Stepper Pas à Pas Bipolaire Zweipoliger Schrittmotor Paso a paso Bipolar Passo a passo Bipolar Motorino attuatore bipolare Tweepolig met trappen Silniczek krokowy dwustopniowy Электр. двухступенчатый двигатель Dvoukrokový spínač Kétpólusú léptető Puţin câte Puţin Bipolar Tek kutuplu Μότερ ενεργοποιητής δύο θέσεων
ELECTRONIC ON/OFF	Electronic On/Off Marche / Arrêt Ein / Aus (elektronisch) Electrónica On/Off Electrónica On/Off On/Off Elettronico Electronisch Aan/Uit Silniczek krokowy jednostopniowy Электр. одноступенный двигатель Spínač zapnuto/vypnuto Elektromos üzemi kapcsoló On/Off Electronic Elektronik Açma/Kapama Ηλεκτρονικό On/Off
ON/OFF	On/Off Marche/Arrêt Ein / Aus On/Off On/Off On/Off Aan/Uit Włączony / Wyłączony ВКЛ/ВЫКЛ Zapnuto / vypnuto Üzemi kapcsoló On/Off Açık/Kapalı On/Off
DIV	Other Autre Diverses Otro Outro Altro Andere Inny Другие Ostatní Más Alt Diğer Άλλο

RECYCLAGE	Recirculate air Recyclage Umluft Reciclaje Reciclagem Ricircolo Luchthercirculatie Recyrkulacja powietrza Рециркуляция воздуха Recirkulace vzduchu Levegőkeringetés Recirculaţie de aer İç hava dolaşımı Ανακύκλωση αέρας
MC	Control Module Module de Commande Steuereinheit Módulo de mando Módulo de comando Modulo di controllo Regel-eenheid Panel sterowania Контрольный модуль Kontrolní panel Vezérlő egység Modul de control Kumanda modülü Μονάδα ελέγχου
RESISTANCE	Resistance Résistance Widerstand Resistencia Resistência Resistenza Weerstand Rezystancja Сопротивление Odpor Ellenállás Rezistor Direnç Αντίσταση
A/C CALCULATOR	A/C Calculator Calculateur de climatisation Klimasteuergerät Calculador de Climatización Calculador de climatização Centralina Elettronica A/C Rekeneenheid A/C komputer Контрольная панель кондиционера Jednotka A/C Légkondicionáló mérő Calculator de climatizare Klima sayacı Υπολογιστής κλιματισμού
BLOWER SPEED REGULATOR	Blower speed regulator Régulateur de vitesse pulseur Gebläseregler Regulador de Velocidad del Impulsor Regulação de velocidade de impulsão Resistore Snelheidsregelaar Kachelmotor Regulator prędkości dmuchawy Регулятор скорости вращения вентилятора Regulátor rychlosti proudění vzduchu Levegősebesség állító Regulator de viteză ventilator de habitaclu Kalorifer motoru hız düzenleyicisi Ρυθμιστής ταχύτητας ανεμιστήρων
FRONT VENTILATION	Front Ventilation Aération frontale Ventilation vorn Ventilación Frontal Ventilação frontal Ventilazione frontale Ventilatie front Wentylacja przednia Фронтальная вентиляция Ventilace Első szellőzés Aerisire frontala Havalandırma Εμπρόσθιος εξαερισμός

3 P	3 positions 3 positions 3 Positionen 3 posiciones 3 posições 3 posizioni 3 posities 3 pozycje 3 положения 3-polohový 3 pozíció 3 poziţie 3 konum 3 θέσης
SINGLE POLE STEPPER	Single Pole Stepper Pas à pas unipolaire Einpoliger Schrittmotor Paso a paso unipolar Passo a passo unipolar Attuatore passo-passo unipolare Enkel polige stappenmotor Pojedyńczy biegun Однополюсный шаговый актуатор 1-polohový přepínač Egyszerű pólus léptető Puţin câte Puţin unipolar Tek kutuplu Βηματικό μοτέρ μίας κατευθύνσεως
SCALE 1:1	Scale 1:1, page xxx Echelle 1:1, pages xxx Skala 1:1 Escala 1:1, página xxx Escala 1:1, página xxx Scala 1:1, pagine xxx Schaal 1:1, pagina xxx Skala 1:1, strona xxxx масштаб 1:1, страница xxx Měřítko 1:1, strana xxx Arány 1:1, oldal xxx Scară 1:1, pagini xxx Ölçek 1:1, sayfa xxx Κλίμακα 1:1, σελίδα xxx
COUPLING KIT	Coupling kit Kit Raccord Kupplungskit Kit de herramientas para enchufes rápidos Kit de ferramentas para engates rápidos Kit raccordo Koppelingenset Zestaw do zarabiania комплект для соединения Spojovací sada Összekapcsoló készlet Kit de racordare Kapak seti Κιτ συνδέσεων
VALVE TOOL	Valve tool Outil pour valve Werkzeug für Ventil Herramientas para Válvulas Ferramentas para válvulas Strumento per valvole Ventiel gereedschap Przyrząd do zaworków Инструмент для снятия и установки клапана Přípravek pro ventil Szelep szerszám Scule pentru supapă Valf tamir takımı Εργαλείο για βαλβίδα
	Injection Gun Pistolet Injection Injektionswerkzeug Pistola de inyección Pistola de injecção Iniettore Injectie pistool Pistolet do wstrzykiwania Пистолет для впрыска Plnící pistole pro výměnu oleje Befecskendező pisztoly Pistol de injecţie Enjeksiyon tabancası Πιστόλι εγχύσεων

LEAK DETECTION FLUID	Leak Detection Fluid Fluide Traceur Kontrastmittel zur Lecksuche Líquido trazador Detector fugas Tracciante Lek detectie vloeistof Kontrast флюоресцентная жидкость Kapalina pro vyhledávání netěsností Szivárgás jelző folyadék Fluid detector de neetanșeitate Kaçak kontrol sıvısı Υγρό ανίχνευσης διαρροών				
ACCESSORIES	Accessories Accessoires Zubehör Accesorios Acessórios Accessori Accessoires Akcesoria аксессуары Příslušenství Kellékek Accesorii Aksesuarlar Εξαρτήματα				
U.V. LAMP KIT	U.V. Lamp Kit Kit Lampe U.V. UV-Lampen Kit Kit Lámpara Ultravioleta Kit Lâmpadas UV Kit lampada U.V. Kit U.V. lamp Zestaw z lampą UV набор для поиска утечек УФ лампой Sada U.V. lampy UV lámpa szett Kit lampă UV U.V. Lamba seti Σετ λάμπες υπεριώδεις ακτίνες				
ES	Exchange A/C compressor (ES) does not contain any lubricant Le compresseur Echange Standard (ES) ne contient pas de lubrifiant Die Standard -Austausch Klimakompressor (ES) enthält kein Schmiermittel El compresor de cambio estandar (ES) no contiene lubricante Este compressor troca -standard (ES) não contém lubrificante Compressore A/C rigenerato (ES) privo di lubrificante Deze ruilcompressor (ES) bevat geen smeermiddel				

New

Valeo

New Nouveau **Neu** Nuevo **Novo** Nuovo **Nieuw** Nowość **Новый** Novy **Nou** Yeni **Νέους**

63

813838	**AUDI**	A1 (2010>)
	AUDI	A3 (2003>2008)
	AUDI	A3 (2008>)
813400	**AUDI**	A3 (96>2003)
813838	**AUDI**	A3 Cabriolet (2008>)
699880	**AUDI**	A4 (2000>2004)
813650	**AUDI**	A4 (2000>2004)
813690	**AUDI**	A4 (2000>2004)
813837	**AUDI**	A4 (2000>2004)
813650	**AUDI**	A4 (2004>)
813835	**AUDI**	A4 (2007>)
699876	**AUDI**	A4 (94>2000)
813650	**AUDI**	A4 Cabriolet (2002>2005)
813690	**AUDI**	A4 Cabriolet (2002>2005)
813837	**AUDI**	A4 Cabriolet (2002>2005)
813835	**AUDI**	A5 (2007>2012)
	AUDI	A5 Cabriolet (2009>)
699876	**AUDI**	A6 (2001>2004)
699880	**AUDI**	A6 (2001>2004)
813836	**AUDI**	A6 (2001>2004)
813650	**AUDI**	A6 (2004>2008)
813835	**AUDI**	A6 (2004>2008)
	AUDI	A6 (2008>)
699876	**AUDI**	A6 (97>2001)
813650	**AUDI**	A8 (2002>2007)
699880	**AUDI**	A8 (94>2002)
813835	**AUDI**	Q5
813838	**AUDI**	S3 (2006>)
813400	**AUDI**	S3 (98>2003)
813690	**AUDI**	S4 (99>2001)
813400	**AUDI**	TT
813838	**AUDI**	TT (2006>)
813833	**BMW**	3 series E46
	BMW	X3 (2003>2006)
813373	**CHEVROLET**	Matiz
813831	**CHRYSLER**	Voyager (96>2001)
813317	**CITROËN**	Berlingo (2002>)
813223	**CITROËN**	Berlingo (2008>)
813317	**CITROËN**	C2
	CITROËN	C3 (2002>2005)
	CITROËN	C3 (2005>)
813223	**CITROËN**	C3 (2009>)
	CITROËN	C3 Picasso
813317	**CITROËN**	C3 Pluriel

63 (.../...)

813223	**CITROËN**	C4
	CITROËN	C5 (2008>)
813322	**CITROËN**	C8
813223	**CITROËN**	DS3
813317	**CITROËN**	Nemo
	CITROËN	Xsara (2000>)
	CITROËN	Xsara Picasso
699368	**FIAT**	Croma II (2005>)
813317	**FIAT**	Fiorino (2008>)
813711	**FORD**	Fiiesta, Fusion
813400	**FORD**	Galaxy (95>2000)
813359	**HYUNDAI**	Elantra (2006>)
813350	**HYUNDAI**	Getz (2002>2005)
813353	**HYUNDAI**	Getz (2002>2005)
	HYUNDAI	Getz (2005>2006)
813358	**HYUNDAI**	Getz (2005>2006)
813353	**HYUNDAI**	Getz (2006>)
813358	**HYUNDAI**	Getz (2006>)
813361	**HYUNDAI**	Grandeur
813368	**HYUNDAI**	i10
813369	**HYUNDAI**	i10
813379	**HYUNDAI**	i10
813356	**HYUNDAI**	i30
813359	**HYUNDAI**	i30
813366	**HYUNDAI**	i30
813364	**HYUNDAI**	ix55
813377	**HYUNDAI**	Santa Fé (2006>)
813361	**HYUNDAI**	Sonata (2005>)
813357	**HYUNDAI**	Tucson (2004>)
813374	**HYUNDAI**	Solaris (Rus)
813356	**KIA**	Ceed
813359	**KIA**	Ceed
813366	**KIA**	Ceed
813360	**KIA**	Cerato
813362	**KIA**	Cerato
813361	**KIA**	Magentis II
813367	**KIA**	Picanto (2004>2007)
813375	**KIA**	Picanto (2004>2007)
	KIA	Picanto (2006>2007)
813367	**KIA**	Picanto (2007>)
813370	**KIA**	Sorento
813371	**KIA**	Sorento
813372	**KIA**	Soul (2008>)
813357	**KIA**	Sportage
813372	**KIA**	Venga (2009>)

New

New Nouveau **Neu** Nuevo **Novo** Nuovo **Nieuw** Nowość **Новый** Novy **Nou** Yeni **Νέους**

Valeo			
	63 (.../...)		
813832	**LAND ROVER**	Freelander	
813695	**MERCEDES**	C Class (203) (2000>2003)	
	MERCEDES	C Class (203) (2004>)	
	MERCEDES	CLK (209) (2002>)	
	MERCEDES	S Class (220)	
699800	**MERCEDES**	Vaneo (414)	
813832	**MG**	MG ZS	
	MG	MG ZT	
813834	**NISSAN**	Almera (2000>2006)	
	NISSAN	Almera Tino (2000>)	
813343	**NISSAN**	Micra (K12)	
	NISSAN	Note (2005>)	
813765	**NISSAN**	Primastar (2006>)	
813834	**NISSAN**	Primera (P11) (96>2001)	
	NISSAN	Primera (P12) (2001>)	
813343	**NISSAN**	Tiida (C11X) (2007>)	
813101	**OPEL**	Astra H (2004>)	
699368	**OPEL**	Signum	
	OPEL	Vectra C (2002>2005)	
813688	**OPEL**	Vectra C (2005>)	
813317	**PEUGEOT**	1007	
	PEUGEOT	206	
	PEUGEOT	206+ (2009>)	
813223	**PEUGEOT**	207	
813749	**PEUGEOT**	208	
813223	**PEUGEOT**	307 (2001>2005)	
813317	**PEUGEOT**	307 (2001>2005)	
813223	**PEUGEOT**	307 (2005>)	
	PEUGEOT	308	
	PEUGEOT	508	
813322	**PEUGEOT**	807	
813317	**PEUGEOT**	Bipper	
	PEUGEOT	Partner (2002>)	
813223	**PEUGEOT**	Partner (2008>)	
813749	**PEUGEOT**	Partner (2008>)	
813317	**PEUGEOT**	Ranch (2002>)	
813665	**RENAULT**	Clio III (2005>)	
813381	**RENAULT**	Clio IV 1.2	
813382	**RENAULT**	Clio IV 0.9 Tce	
813383	**RENAULT**	Clio IV 1.5 dci	
813384	**RENAULT**	Clio IV 1.6 turbo	
813665	**RENAULT**	Kangoo (2007>)	
813339	**RENAULT**	Koleos	
813764	**RENAULT**	Latitude	

Valeo			
	63 (.../...)		
813765	**RENAULT**	Latitude	
	RENAULT	Master (2010>)	
813705	**RENAULT**	Mégane II	
813763	**RENAULT**	Mégane III (2008>)	
813665	**RENAULT**	Modus (2004>2007)	
	RENAULT	Modus (2008>)	
813705	**RENAULT**	Scénic II	
813763	**RENAULT**	Scénic III	
813665	**RENAULT**	Twingo (2007>)	
813832	**ROVER**	45 (2000>2004)	
	ROVER	75	
813400	**SEAT**	Alhambra	
813838	**SEAT**	Altea	
699803	**SEAT**	Arosa	
699883	**SEAT**	Cordoba (2002>)	
699803	**SEAT**	Cordoba (99>2002)	
813400	**SEAT**	Cordoba (99>2002)	
699883	**SEAT**	Ibiza (2001>)	
	SEAT	Ibiza (2008>)	
699803	**SEAT**	Ibiza (99>2001)	
813400	**SEAT**	Ibiza (99>2001)	
	SEAT	Inca	
	SEAT	Leon	
813838	**SEAT**	Leon II (2005>)	
	SEAT	Toledo (2004>)	
813400	**SEAT**	Toledo (98>2004)	
699883	**SKODA**	Fabia	
813400	**SKODA**	Octavia (2000>2004)	
813838	**SKODA**	Octavia (2004>)	
813400	**SKODA**	Octavia (96>2000)	
699883	**SKODA**	Roomster (2006>)	
699876	**SKODA**	Superb (2001>2008)	
813769	**SUZUKI**	Grand Vitara (YT4)	
813842	**TOYOTA**	Avensis (97>2000)	
	TOYOTA	Corolla (90) (87>92)	
813101	**VAUXHALL**	Astra V (2004>)	
699368	**VAUXHALL**	Signum	
	VAUXHALL	Vectra (2002>2005)	
699883	**VOLKSWAGEN**	Bora	
813400	**VOLKSWAGEN**	Bora	
	VOLKSWAGEN	Caddy (95>2004)	
699883	**VOLKSWAGEN**	Fox	
	VOLKSWAGEN	Golf IV (97>2003)	
813400	**VOLKSWAGEN**	Golf IV (97>2003)	

New

Valeo

New Nouveau **Neu** Nuevo **Novo** Nuovo **Nieuw** Nowość **Новый** Novy **Nou** Yeni **Νέους**

Valeo		
	63 (.../...)	
813838	**VOLKSWAGEN**	Golf VI (2008>)
	VOLKSWAGEN	Golf VI Plus (2009>)
	VOLKSWAGEN	Jetta (2010>)
699803	**VOLKSWAGEN**	Lupo
813400	**VOLKSWAGEN**	New Beetle (2001>2005)
	VOLKSWAGEN	New Beetle (2005>)
813838	**VOLKSWAGEN**	New Beetle (2011>)
813400	**VOLKSWAGEN**	New Beetle (98>2001)
699876	**VOLKSWAGEN**	Passat (2000>2005)
	VOLKSWAGEN	Passat (96>2000)
813829	**VOLKSWAGEN**	Phaeton (2002>2007)
699883	**VOLKSWAGEN**	Polo (2001>2004)
	VOLKSWAGEN	Polo (2005>)
699803	**VOLKSWAGEN**	Polo (99>2001)
813400	**VOLKSWAGEN**	Polo (99>2001)
813838	**VOLKSWAGEN**	Scirocco (2008>)
813400	**VOLKSWAGEN**	Sharan (2000>2003)
	VOLKSWAGEN	Sharan (2003>)
	VOLKSWAGEN	Sharan (95>2000)
813838	**VOLKSWAGEN**	Tiguan
813829	**VOLKSWAGEN**	Touareg (2002>)
	VOLKSWAGEN	Transporter (7J/7H)(2003>2009)
813323	**VOLVO**	C30
	VOLVO	S40 (2004>)
813640	**VOLVO**	S60 (2010>)
	VOLVO	S80 (2006>)
813323	**VOLVO**	V50
813640	**VOLVO**	V60 (2010>)
	VOLVO	V70 (2000>)
	VOLVO	V70 (2007>)
	VOLVO	XC70 (2000>2007)
	VOLVO	XC70 (2007>)
	45	
814364	**AUDI**	A1 (2010>)
814370	**AUDI**	A4 (2007>)
	AUDI	A5 (2007>2012)
	AUDI	A5 Cabriolet (2009>)
	AUDI	Q5
817838	**AUDI**	Q7
814370	**AUDI**	S4 (2008>)
	AUDI	S5 (2007>2012)
	AUDI	S5 Cabriolet (2009>2012)

Valeo		
	45 (.../...)	
814367	**BMW**	X5 E70 (12/2006>)
	BMW	X5 LCI E70 (2010>)
	BMW	X6 E71
814358	**CHEVROLET**	Matiz
814363	**CITROËN**	C5 (2008>)
814366	**CITROËN**	C8
	CITROËN	Dispatch (2007>)
	CITROËN	Jumpy (2007>)
814344	**DAEWOO**	Kalos
818061	**DAEWOO**	Kalos
818060	**DAEWOO**	Matiz (2000>)
	DAEWOO	Matiz (98>2000)
814366	**FIAT**	Scudo (2007>)
	FIAT	Ulysse (2002>)
814360	**FORD**	Mondeo III (2007>)
814326	**HONDA**	Civic (EJ/EK)
814333	**HONDA**	Civic (FK/FD) (2006>)
814350	**HYUNDAI**	Accent (2003>2004)
	HYUNDAI	Accent (2005>)
814351	**HYUNDAI**	Elantra (2006>)
814341	**HYUNDAI**	Getz (2002>2005)
818074	**HYUNDAI**	Getz (2002>2005)
814341	**HYUNDAI**	Getz (2005>2006)
818074	**HYUNDAI**	Getz (2005>2006)
	HYUNDAI	Getz (2006>)
814341	**HYUNDAI**	Getz (TB) (India) (2007>)
818074	**HYUNDAI**	Getz (TB) (India) (2007>)
814341	**HYUNDAI**	i10
814354	**HYUNDAI**	i10
814351	**HYUNDAI**	i30
818075	**HYUNDAI**	Matrix
814353	**HYUNDAI**	Santa Fé (2000>2006)
	HYUNDAI	Santa Fé (2006>)
814362	**HYUNDAI**	Solaris
814347	**HYUNDAI**	Sonata (2005>2008)
	HYUNDAI	Tucson (2004>)
814345	**KIA**	Cerato
814346	**KIA**	Picanto
	KIA	Picanto (2004>2007)
	KIA	Picanto (2006>2007)
814352	**KIA**	Sorento (2002>2006)
818080	**KIA**	Sorento (2002>2006)
	KIA	Sorento (2006>)
814347	**KIA**	Sportage
814366	**LANCIA**	Phedra

New

New Nouveau **Neu** Nuevo **Novo** Nuovo **Nieuw** Nowość **Новый** Novy **Nou** Yeni **Νέους**

45 (.../...)

818200	**MERCEDES**	C Class (203) (2000>2003)
814368	**MERCEDES**	C Class (203) (2004>)
818200	**MERCEDES**	C Class (203) (2004>)
	MERCEDES	CLK (209)
817789	**MITSUBISHI**	Carisma (95>99)
	MITSUBISHI	Carisma (99>)
817791	**MITSUBISHI**	Pajero Pinin (99>2005)
817789	**MITSUBISHI**	Space Star
814328	**NISSAN**	Almera (2000>2003)
817836	**NISSAN**	Juke
	NISSAN	Micra (2005>)
	NISSAN	Micra (K12) (2003>2005)
	NISSAN	Note (2005>)
814328	**NISSAN**	Primera (P12) (2001>)
814331	**NISSAN**	X-Trail (2001>2007)
814359	**OPEL**	Antara
814014	**OPEL**	Meriva
817798	**OPEL**	Meriva
814363	**PEUGEOT**	407
	PEUGEOT	508
814365	**PEUGEOT**	508
814366	**PEUGEOT**	807
	PEUGEOT	Expert II (2007>)
817838	**PORSCHE**	Cayenne (2003>2006)
818992	**SCANIA**	Series-4
814364	**SEAT**	Ibiza (2008>)
814357	**SEAT**	Leon (99>2005)
	SEAT	Toledo (98>2004)
814330	**SUZUKI**	Liana
814327	**SUZUKI**	Swift (2005>)
814359	**VAUXHALL**	Antara (2006>)
814014	**VAUXHALL**	Meriva
817798	**VAUXHALL**	Meriva
814357	**VOLKSWAGEN**	Bora
	VOLKSWAGEN	Golf IV (97>2003)
814369	**VOLKSWAGEN**	Jetta (2010>)
817838	**VOLKSWAGEN**	Touareg (2002>2006)
	VOLKSWAGEN	Touareg (2006>2010)
	VOLKSWAGEN	Touareg (2010>)
818990	**VOLVO TRUCKS**	FH12-Series
818991	**VOLVO TRUCKS**	FH12-Series
818989	**VOLVO TRUCKS**	FH16-Series
818991	**VOLVO TRUCKS**	FH16-Series

01

515140	**PEUGEOT**	508

EVA

01

515138	**RENAULT**	Trafic

48

701003	**ABARTH**	Grande Punto
	ABARTH	Punto Evo
701017	**ALFA ROMEO**	147 (2000>)
	ALFA ROMEO	156 (2003>)
715705	**ALFA ROMEO**	Giulietta (2010>)
701017	**ALFA ROMEO**	GT
701003	**ALFA ROMEO**	MiTo
715727	**AUDI**	A1 (2010>)
715737	**AUDI**	A1 (2010>)
701009	**AUDI**	A2
701001	**AUDI**	A3 (2003>)
701020	**AUDI**	A3 (2012>)
701023	**AUDI**	A4 (2000>2007)
	AUDI	A4 Cabriolet (2002>)
	AUDI	A4 Cabriolet II (2006>)
	AUDI	A6 (2001>2004)
715733	**AUDI**	A6 (2010>)
701023	**AUDI**	A6 (97>2001)
	AUDI	A6 (97>2001)
	AUDI	A6 Allroad (2000>2006)
715733	**AUDI**	A6 Allroad (2012>)
	AUDI	A7 (2010>)
	AUDI	A8 (2009>)
701001	**AUDI**	Q3
701023	**AUDI**	RS4 Quattro V8 FSi (2005>)
	AUDI	RS6 Quattro
701001	**AUDI**	S3 (2006>)
701016	**AUDI**	S3 (98>2003)
701023	**AUDI**	S4 Cabriolet II (2004>)
	AUDI	S4 V8 (2003>)
	AUDI	S6 (2001>2005)
	AUDI	S6 (99>2001)
715733	**AUDI**	S7
	AUDI	S8 (2012>)
701016	**AUDI**	TT (98>2006)
701001	**AUDI**	TT II (2006>)
715733	**BENTLEY**	Mulsanne
701019	**BMW**	1 Serie (2012>)
	BMW	3 Serie (2012)

New

Valeo

New Nouveau **Neu** Nuevo **Novo** Nuovo **Nieuw** Nowość **Новый** Novy **Nou** Yeni **Νέους**

Valeo		
	48 (.../...)	
701010	**CADILLAC**	BLS
715731	**CHEVROLET**	Captiva (2011>)
715711	**CHRYSLER**	Grand Voyager (2008>)
715735	**CHRYSLER**	Sebring (2006>)
701014	**CITROËN**	C2
	CITROËN	C3
701007	**CITROËN**	C3 (2009>)
701014	**CITROËN**	C3 Picasso (2009>)
	CITROËN	C3 Pluriel
	CITROËN	C4
	CITROËN	C4 II
701002	**CITROËN**	C5 (2004>2008)
	CITROËN	C6 (2005>2008)
701013	**CITROËN**	C8
701007	**CITROËN**	DS3
701014	**CITROËN**	DS4
701013	**CITROËN**	Jumpy I (Facelift)
701021	**DAIHATSU**	Charade
715730	**DAIHATSU**	Charade
715735	**DODGE**	Avenger
	DODGE	Caliber
	DODGE	Journey
701010	**FIAT**	Croma II (2005>)
701003	**FIAT**	Fiorino
715735	**FIAT**	Freemont
701003	**FIAT**	Grande Punto
	FIAT	Punto Evo (2009>)
	FIAT	Qubo
701013	**FIAT**	Scudo (2004>2006)
	FIAT	Ulysse (2002>)
701004	**FORD**	Fiesta (2002>2008)
701005	**FORD**	Focus (98>2004)
701011	**FORD**	Focus II (2004>2011)
701004	**FORD**	Fusion
715745	**FORD**	Ranger
701005	**FORD**	Tourneo Connect
715742	**FORD**	Transit (2006>)
701005	**FORD**	Transit Connect
701011	**FORD**	Turnier
715738	**HYUNDAI**	H1 (2000>2006)
	HYUNDAI	H1 Mini Bus (2001>2006)
715741	**HYUNDAI**	ix20
715740	**HYUNDAI**	ix35
	HYUNDAI	Tucson

Valeo		
	48 (.../...)	
715735	**JEEP**	Compass
	JEEP	Patriot
715740	**KIA**	Sportage III
715741	**KIA**	Venga (2010>)
715739	**LADA**	Kalina 1118
	LADA	Kalina 1119
715735	**LANCIA**	Flavia
701013	**LANCIA**	Phedra
701021	**LEXUS**	CT 200h (2010>)
715730	**LEXUS**	CT 200h (2010>)
701021	**LEXUS**	GS (2005>)
715730	**LEXUS**	GS (2005>)
715729	**LEXUS**	GS (97>2000)
701021	**LEXUS**	GX 460
715730	**LEXUS**	GX 460
701021	**LEXUS**	IS (2005>)
715730	**LEXUS**	IS (2005>)
715729	**LEXUS**	IS (99>2005)
701021	**LEXUS**	LFA
715730	**LEXUS**	LFA
715729	**LEXUS**	LS (94>2000)
701021	**LEXUS**	LS 460 (2006>)
715730	**LEXUS**	LS 460 (2006>)
701021	**LEXUS**	LX 570
715730	**LEXUS**	LX 570
715729	**LEXUS**	RX (97>2003)
701021	**LEXUS**	RX350/450H
715730	**LEXUS**	RX350/450H
715726	**MAZDA**	3 (2008>)
715745	**MAZDA**	BT-50 II
715728	**MAZDA**	MPV
	MAZDA	RX-8
715736	**SMART**	Fortwo
701009	**MERCEDES**	G Class (W461/463)
716065	**MERCEDES TRUCKS**	Actros II
716066	**MERCEDES TRUCKS**	Actros II
701018	**NISSAN**	Kubistar
715732	**NISSAN**	Qashqai (2007>2010)
701008	**OPEL**	Astra G (98>2004)
701010	**OPEL**	Combo (2001>)
	OPEL	Corsa C (2000>2003)
	OPEL	Corsa C (2003>2006)
701003	**OPEL**	Corsa D (2006>)

New

New Nouveau **Neu** Nuevo **Novo** Nuovo **Nieuw** Nowość **Новый** Novy **Nou** Yeni **Νέους**

Valeo		
	48 (.../...)	
701010	**OPEL**	Signum
	OPEL	Tigra Twin Top (2004>)
	OPEL	Vectra C (2002>)
701008	**OPEL**	Zafira (98>)
701014	**PEUGEOT**	308
701000	**PEUGEOT**	508
701014	**PEUGEOT**	1007
701007	**PEUGEOT**	207, 208
701014	**PEUGEOT**	307 (2001>2004)
	PEUGEOT	307 (2005>)
	PEUGEOT	307 (2005>)
701002	**PEUGEOT**	407
	PEUGEOT	407 Coupé
701013	**PEUGEOT**	807
	PEUGEOT	Expert (2004>2006)
701014	**PEUGEOT**	RCZ
701018	**RENAULT**	Clio Campus Evolution
	RENAULT	Clio I
	RENAULT	Clio II
715725	**RENAULT**	Clio IV
701012	**RENAULT**	Grand Scenic
701018	**RENAULT**	Kangoo (2003>2007)
	RENAULT	Kangoo (97>2003)
701015	**RENAULT**	Laguna II
715734	**RENAULT**	Latitude
701018	**RENAULT**	Mégane (95>99)
	RENAULT	Mégane (98>2002)
701006	**RENAULT**	Mégane III
701012	**RENAULT**	Scénic III
701018	**RENAULT**	Thalia
701015	**RENAULT**	Vel Satis
701010	**SAAB**	9-3 (2002>)
	SAAB	9-3 Cabriolet
701001	**SEAT**	Alhambra III
	SEAT	Altea
701016	**SEAT**	Arosa
701009	**SEAT**	Cordoba (2002>)
701023	**SEAT**	Exeo
701009	**SEAT**	Ibiza (2001>2011)
715737	**SEAT**	Ibiza (2012>)
701001	**SEAT**	Leon (2005>)
701016	**SEAT**	Leon (99>2005)
715744	**SEAT**	Mii
	SKODA	Citigo
715727	**SKODA**	Fabia (2010>)

Valeo		
	48 (.../...)	
715737	**SKODA**	Fabia (2010>)
701009	**SKODA**	Fabia (99>2010)
	SKODA	Felicia (94>2001)
701016	**SKODA**	Octavia
701001	**SKODA**	Octavia (2004>)
701009	**SKODA**	Roomster
701001	**SKODA**	Superb (2008>)
	SKODA	Yeti
701021	**SUBARU**	Legacy
715730	**SUBARU**	Legacy
701021	**SUBARU**	Outback
715730	**SUBARU**	Outback
701021	**SUBARU**	Trezia
715730	**SUBARU**	Trezia
715743	**SUZUKI**	Kizashi Sport
701021	**TOYOTA**	Alphard II
715730	**TOYOTA**	Alphard II
701021	**TOYOTA**	Auris
715730	**TOYOTA**	Auris
701021	**TOYOTA**	Avalon
715730	**TOYOTA**	Avalon
701021	**TOYOTA**	Avensis (T27)
715730	**TOYOTA**	Avensis (T27)
701021	**TOYOTA**	Camry
715730	**TOYOTA**	Camry
701021	**TOYOTA**	Corolla X
715730	**TOYOTA**	Corolla X
715729	**TOYOTA**	Harrier
	TOYOTA	Highlander I
701021	**TOYOTA**	Highlander II
715730	**TOYOTA**	Highlander II
701021	**TOYOTA**	Hilux
715730	**TOYOTA**	Hilux
701021	**TOYOTA**	Land Cruiser
715730	**TOYOTA**	Land Cruiser
701021	**TOYOTA**	Land Cruiser Prado
715730	**TOYOTA**	Land Cruiser Prado
701021	**TOYOTA**	RAV4 II (2006>)
715730	**TOYOTA**	RAV4 II (2006>)
701021	**TOYOTA**	Tundra
715730	**TOYOTA**	Tundra
701021	**TOYOTA**	Urban Cruiser
715730	**TOYOTA**	Urban Cruiser
701021	**TOYOTA**	Verso
715730	**TOYOTA**	Verso

New

Valeo

New Nouveau **Neu** Nuevo **Novo** Nuovo **Nieuw** Nowość **Новый** Novy **Nou** Yeni **Νέους**

Valeo		
	48 (.../...)	
701021	**TOYOTA**	Verso-S
715730	**TOYOTA**	Verso-S
701021	**TOYOTA**	Yaris II
715730	**TOYOTA**	Yaris II
701021	**TOYOTA**	Yaris III
715730	**TOYOTA**	Yaris III
701008	**VAUXHALL**	Astra IV (98>2004)
701010	**VAUXHALL**	Combo (2001>)
	VAUXHALL	Corsa II (2000>2003)
	VAUXHALL	Corsa II (2003>2006)
701003	**VAUXHALL**	Corsa III (2006>)
701010	**VAUXHALL**	Signum
	VAUXHALL	Tigra Twin Top
	VAUXHALL	Vectra (2002>)
701008	**VAUXHALL**	Zafira
701016	**VOLKSWAGEN**	Bora
701001	**VOLKSWAGEN**	Caddy (2004>)
	VOLKSWAGEN	Caddy IV (2010>)
	VOLKSWAGEN	Eos
701009	**VOLKSWAGEN**	Fox
701016	**VOLKSWAGEN**	Golf IV
701001	**VOLKSWAGEN**	Golf Plus
	VOLKSWAGEN	Golf V
	VOLKSWAGEN	Golf VI
	VOLKSWAGEN	Golf VI Cabriolet
701020	**VOLKSWAGEN**	Golf VII
701001	**VOLKSWAGEN**	Jetta (2005>)
701016	**VOLKSWAGEN**	Lupo
	VOLKSWAGEN	New Beetle (2001>2005)
	VOLKSWAGEN	New Beetle (2005>)
701001	**VOLKSWAGEN**	New Beetle (2011>)
701016	**VOLKSWAGEN**	New Beetle (98>2001)
701001	**VOLKSWAGEN**	Passat (2005>)
	VOLKSWAGEN	Passat CC
701009	**VOLKSWAGEN**	Polo (2001>)
701016	**VOLKSWAGEN**	Polo (99>2001)
701001	**VOLKSWAGEN**	Scirocco
	VOLKSWAGEN	Sharan (2010>)
	VOLKSWAGEN	Tiguan
	VOLKSWAGEN	Touran
	VOLKSWAGEN	Touran Heros
715744	**VOLKSWAGEN**	UP

Valeo		
	05	
715262	**HYUNDAI**	Accent (2005>)
715261	**HYUNDAI**	Accent/Getz
715260	**HYUNDAI**	i30
715263	**KIA**	Picanto
715264	**KIA**	Picanto
	02	
515136	**RENAULT**	Clio II (98>2001)
515137	**RENAULT**	Kangoo (97>2003)
	01	
515139	**PEUGEOT**	208, 508
	09	
812442	**DAEWOO**	Kalos
812430	**HYUNDAI**	i30
812441	**HYUNDAI**	i30
812431	**HYUNDAI**	Matrix
812440	**HYUNDAI**	Tucson
812435	**HYUNDAI**	XG (99>2002)
812444	**KIA**	Carnival
812430	**KIA**	Ceed
812436	**KIA**	Picanto (2006>2007)
812438	**KIA**	Picanto (2007>)

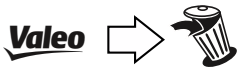

	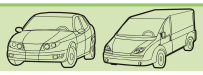		
	2 ✘		
515044	**KIA**	Clarus	
515054	**VOLVO**	C30,V50	
	3 ✘		
509574	**AUDI**	A3,A4	
509657	**LAND ROVER**	Range Rover	
509357	**PEUGEOT**	406,607	
515125	**SAAB**	9-5 (97>2001)	
	10 ✘		
509942	**HONDA**	Accord VIII (2003>)	
515040	**KIA**	Shuma	
515042	**MITSUBISHI**	Grandis	
515043	**MITSUBISHI**	Lancer (CS) (2003>)	
515053	**OPEL**	Insignia	
515045	**SUBARU**	Impreza	
515046	**SUZUKI**	SUZUKI	
515047	**SUZUKI**	Liana	
509932	**VOLKSWAGEN**	Touareg (2002>2006)	
515048	**VOLVO**	S60,S80,V70	
	1 ✘		
818498	**OPEL**	Zafira (98>2003)	
	70 ✘ 14		
813156	**ALFA ROMEO**	159	
813680	**ALFA ROMEO**	155,GTV,Spider	
699725	**AUDI**	A4 (94>2000)	
699728	**AUDI**	100,80,A6	
699729	**AUDI**	80,Coupe	
699730	**AUDI**	100	
699731	**AUDI**	A8 (94>2002)	
699822	**BMW**	Serie 3 E36	
813192	**BMW**	1 series E81,3 series E90,X1	
699020	**CITROËN**	Jumper	**➜699520**
699023	**CITROËN**	XM,205,605	**➜699523**
699025	**CITROËN**	XM	**➜699525**
699026	**CITROËN**	Berlingo,Saxo,Xsara	**➜699526**
699028	**CITROËN**	Jumper,Boxer	**➜699528**
699106	**CITROËN**	C5,C8,Xantia	**➜699606**
699352	**CITROËN**	C5,407	**➜813225**
699353	**CITROËN**	C5,407	
813158	**CITROËN**	C5,C8	

	70 ✘ 14		
813727	**CITROËN**	C4 Picasso	
813729	**CITROËN**	C4	
813730	**CITROËN**	C5 (2008>)	
813731	**CITROËN**	C4	
813805	**CITROËN**	Xsara Picasso	
813821	**CITROËN**	Jumpy (2007>)	
813822	**CITROËN**	C8	
699414	**DACIA**	Logan	
699335	**FORD**	Fiesta,Ka,StreetKa	
699220	**HONDA**	Accord VI ,Civic V	**➜699720**
699297	**HONDA**	Accord V,Accord VI	
699312	**HONDA**	Accord Aerodeck	
699313	**HONDA**	Civic V (EJ*)	
699825	**HONDA**	Accord Aerodeck	
813257	**INFINITI**	FX	
699339	**JAGUAR**	X-Type	
813176	**MAZDA**	3, 5, 6	
699569	**MERCEDES**	190 (201),200/300 (124)	
813654	**MERCEDES**	S Class (140)	
813655	**MERCEDES**	S Class (140)	
813259	**NISSAN**	350 Z	
813260	**NISSAN**	X-Trail (T31>)	
813261	**NISSAN**	X-Trail (T31>)	
699869	**OPEL**	Meriva	
699902	**OPEL**	Vectra B (95>99)	
699903	**OPEL**	Frontera (91>98)	
699904	**OPEL**	Frontera (91>98)	
699905	**OPEL**	Astra G	
699909	**OPEL**	Omega A (86>94) , Senator B (87>93)	
699324	**OPEL**	Zafira (98>2005)	
699359	**PEUGEOT**	307	**➜699859**
813728	**PEUGEOT**	Expert (2007>)	
813807	**PEUGEOT**	307(2001>2005)	
813653	**PORSCHE**	944	
699157	**RENAULT**	Mégane	
699659	**RENAULT**	Safrane	
699861	**RENAULT**	Master,trafic	
813629	**RENAULT**	Mascott ,Master (2003>)	
813721	**RENAULT**	Laguna II	
813677	**SAAB**	9-5,900	
699015	**SEAT**	Arosa,Felicia,Polo	**➜699515**
699305	**SEAT**	Alhambra,Sharan	
813266	**SUBARU**	Forester (2002>2005)	
813267	**SUBARU**	Forester (97>2002)	
813626	**VAUXHALL**	Combo (2002>)	

✘ **Canceled** Supprimée **Nicht mehr lieferbar** Suprimida **Suprimida** Annullato **Uitgeput** Wycofany **Недотупны** Nahrazeno **Radiat** Iptal **Καταργήθηκε**

➜ **Replaced** Remplacée **Ersetzt** Remplazada **Trocada** Sostituito **Vervangen** Zastąpiony **Заменены** Vyžazeno **înlocuit** Değişmiş **Αντικατεστημένος**

Valeo

Valeo

	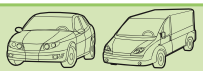		
	70 ✘ 14		
699324	**VAUXHALL**	Zafira (98>2005)	
699012	**VOLKSWAGEN**	Transporter (F70)	**➜699512**
699016	**VOLKSWAGEN**	Passat	**➜699516**
699152	**VOLKSWAGEN**	Transporter (F7D)	**➜699652**
699372	**VOLKSWAGEN**	Polo	
699516	**VOLKSWAGEN**	Passat	
699516	**VOLKSWAGEN**	Passat	
699613	**VOLKSWAGEN**	145,146	
699617	**VOLKSWAGEN**	LT II,LT III	**➜699661**
	12 ✘		
818187	**ALFA ROMEO**	159,Brera,GT,Spider II	
814113	**BMW**	5,6,7 Series	
816945	**CHRYSLER**	Voyager (96>2001)	
817022	**JEEP**	Cherokee	
817580	**LANCIA**	Thesis	
816835	**PEUGEOT**	'405 (92>96)	
816984	**PEUGEOT**	'Partner (96>2002)	
814188	**RENAULT**	Fluence électrique	
816756	**RENAULT**	Safrane	
816987	**RENAULT**	Safrane	
817061	**RENAULT**	Safrane	
816996	**VOLKSWAGEN**	LT II,LT III	
	5 ✘		
509965	**CITROËN**	C4	
509966	**CITROËN**	C4 Picasso (2006>),Berlingo (2008>)	
509958	**RENAULT**	Clio III,Modus,Twingo II	
509970	**TOYOTA**	Dyna 100,MR 2,Paseo	
509972	**TOYOTA**	Yaris	
	2 ✘		
817433	**BMW**	5 series E39	
817108	**RENAULT**	Premium,Kerax,Midlum	
	1 ✘		
698172	**SAAB**	9000	
	5 ✘		
715241	**AUDI**	A2 (2000>2005)	
715234	**PEUGEOT**	206,206+	
698251	**RENAULT**	Master (97>2003)	
715225	**RENAULT**	Modus (2008>)	

	5 ✘		
698209	**SEAT**	Arosa,Cordoba	
	1 ✘		
699939		O'RING KIT	
	6 ✘		
515037	**CITROËN**	C1	
515095	**MG**	MG F,MG TF	
509279	**RENAULT**	21	
509284	**RENAULT**	Laguna (94>)	
509285	**RENAULT**	Super 5,R9,R11,Express	
515073	**VAUXHALL**	Vectra (95>2002)	
	3 ✘		
508638	**RENAULT**	Espace III,Laguna	
508661	**RENAULT**	Twingo	
508662	**RENAULT**	Clio	
	13 ✘		
812279	**ALFA ROMEO**	156 (97>2003),GTV (95>2003)	
812278	**ALFA ROMEO**	147 (2000>),156 (2003>)	
812381	**CITROËN**	C1	
812383	**FIAT**	Seicento	
812273	**FORD**	Focus (98>2004)	
812276	**FORD**	Transit (95>99)	
812367	**FORD**	Focus (2004>),Kuga	
812047	**IVECO TRUCKS**	115,135,175,190	
812380	**PEUGEOT**	107	
812414	**PEUGEOT**	107	
812035	**RENAULT TRUCKS**	R-Major	
812379	**TOYOTA**	Aygo	
812415	**TOYOTA**	Aygo	
	1 ✘		
508790	**RENAULT**	Safrane	

✘ **Canceled** Supprimée **Nicht mehr lieferbar** Suprimida **Suprimida** Annullato **Uitgeput** Wycofany **Недотупны** Nahrazeno **Radiat** Iptal **Καταργήθηκε**

➜ **Replaced** Remplacée **Ersetzt** Remplazada **Trocada** Sostituito **Vervangen** Zastąpiony **Заменены** Vyžazeno **înlocuit** Değişmiş **Αντικατεστημένος**

1

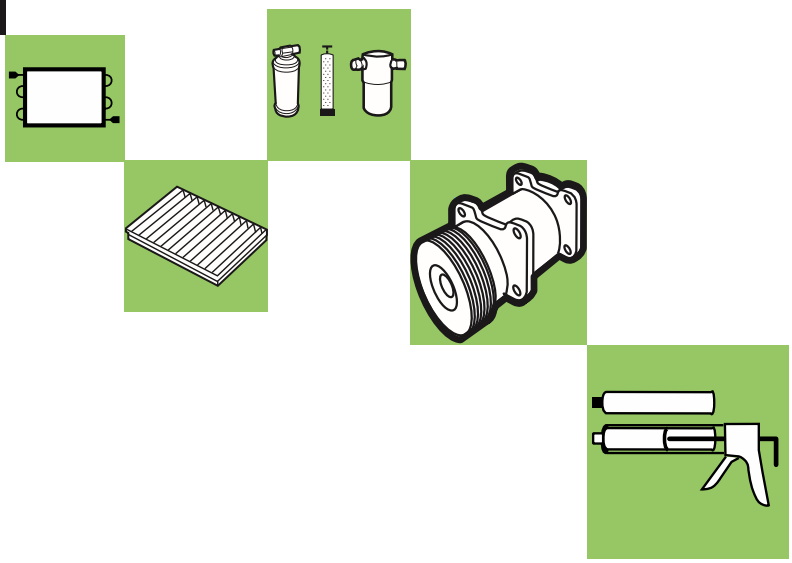

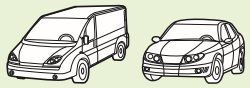

PA

CA

NEW ES

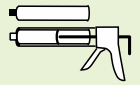

ALFA ROMEO

147 (2000>2004)	1.6 i Twin Spark 16V	AR32104, AR37203	10/2000 ► 09/2004	**817463**	+	**509920**		**698747**	**699175**	**699675**	135 CC	**699935**	
147 (2000>2004)	2.0 i Twin Spark 16V	AR32310	10/2000 ► 09/2004	**817463**	+	**509920**		**698747**	**699175**	**699675**	135 CC	**699935**	
147 (2000>2004)	1.9 JTD	937A2.000	10/2000 ► 09/2004	**817527**		**508805**		**698747**	**699175**	**699675**	135 CC	**699935**	>ch 3283179
147 (2000>2004)	1.9 JTD 16V	192B1.000, 937A4.000	12/2002 ► 09/2004	**817818**	+	**509920**		**698747**	**699175**	**699675**	135 CC	**699935**	
147 (2004>)	1.6 i Twin Spark 16V	AR32104, AR37203	10/2004 ►	**817463**	+	**509920**		**698747**	**699175**	**699675**	135 CC	**699935**	
147 (2004>)	2.0 i Twin Spark 16V	AR32310	10/2004 ►	**817463**	+	**509920**		**698747**	**699175**	**699675**	135 CC	**699935**	
147 (2004>)	1.9 JTD	937A2.000	10/2004 ►	**817527**		**508805**		**698747**	**699175**	**699675**	135 CC	**699935**	
147 (2004>)	1.9 JTD 16V	937A4.000, 937A5.000	10/2004 ►	**817818**	+	**509920**		**698747**	**699175**	**699675**	135 CC	**699935**	

AUDI

A3 (96>2003)	1.6 i	AEH, AKL, APF	09/1996 ► 05/1999	**817244**		**508811**	**698159**	**698686**	**813200**	**813700**	135 CC	**699935**	>ch 8L-X-085218, ch 8L-Y-036 429
A3 (96>2003)	1.6 i	AEH, AKL, APF, AVU	06/1999 ► 08/2000	**817244**		**508811**	**698159**	**698686**	**813200**	**813700**	135 CC	**699935**	ch 8L-Y-036 430>
A3 (96>2003)	1.6 i	AEH, AKL, AVU, BFQ	09/2000 ► 06/2003	**817244**		**508811**	**698159**	**698686**	**813200**	**813700**	135 CC	**699935**	
A3 (96>2003)	1.8 i 20V	AGN, APG	09/1996 ► 05/1999	**817244**		**508811**	**698159**	**698686**	**813200**	**813700**	135 CC	**699935**	>ch 8L-Y-036 429
A3 (96>2003)	1.8 i 20V	AGN, APG	06/1999 ► 08/2000	**817244**		**508811**	**698159**	**698686**	**813200**	**813700**	135 CC	**699935**	ch 8L-Y-036 430>
A3 (96>2003)	1.8 i 20V	AGN, APG	09/2000 ► 06/2003	**817244**		**508811**	**698159**	**698686**	**813200**	**813700**	135 CC	**699935**	
A3 (96>2003)	1.8 i Turbo 20V	AGU, AJQ, AQA	12/1996 ► 05/1999	**817244**		**508811**	**698159**	**698686**	**813200**	**813700**	135 CC	**699935**	>ch 8L-Y-036 429
A3 (96>2003)	1.8 i Turbo 20V	AJQ, APP, AGU, AQA	09/1999 ► 06/2003	**817244**		**508811**	**698159**	**698686**	**813200**	**813700**	135 CC	**699935**	ch 8L-Y-036 430, ch 8L-Y-036430>
A3 (96>2003)	1.8 i Turbo 20V	AGU, AQA, ARX/Y/Z, AUM, AUQ	07/1999 ► 06/2003	**817244**		**508811**	**698159**	**698686**	**813200**	**813700**	135 CC	**699935**	ch 8L-Y-036 430>
A3 (96>2003)	1.9 TDi	AGR, AHF, ALH, ASV/Z, ATD	09/1996 ► 09/1999	**817244**		**508811**	**698159**	**698686**	**813200**	**813700**	135 CC	**699935**	>ch 8L-Y-036429
A3 (96>2003)	1.9 TDi	AGR, AHF, ALH, ASV	10/1999 ► 08/2000	**817244**		**508811**	**698159**	**698686**	**813200**	**813700**	135 CC	**699935**	
A3 (96>2003)	1.9 TDi	AHF, ALH, ASV	09/2000 ► 04/2002	**817244**		**508811**	**698159**	**698686**	**813200**	**813700**	135 CC	**699935**	
A3 (96>2003)	1.9 TDi	ASZ, ATD, AXR	10/1999 ► 06/2003	**817244**		**508811**	**698159**	**698686**	**813200**	**813700**	135 CC	**699935**	ch 8L-Y-036430>
A3 (2003>)	1.6 FSi	BAG, BLF, BLP	08/2003 ► 09/2006	**817777**	+	**509790**		**715665**	**699357**		120 CC	**699935**	ch 8P-6A000 001>ch 8P-4-119 607 / RHD
A3 (2003>)	1.6 FSi	BAG, BLF, BLP	08/2003 ► 09/2006	**817777**	+	**509790**	**698800**	**698801**	**699357**		120 CC	**699935**	ch 8P-6A000 001>ch 8P-4-119 607
A3 (2003>)	1.6 i	BGU, BSE, BSF	05/2003 ►	**817777**	+	**509790**		**715665**	**699357**		120 CC	**699935**	ch 8P-4-119 608> / RHD
A3 (2003>)	1.6 i	BGU, BSE, BSF	05/2003 ►	**817777**	+	**509790**	**698800**	**698801**	**699357**		120 CC	**699935**	ch 8P-4-119 608>
A3 (2003>)	1.8 TFSi	BYT	08/2006 ►	**817777**	+	**509790**		**715665**	**699357**		120 CC	**699935**	>ch 8E-7-069 491 / RHD

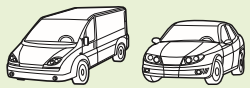

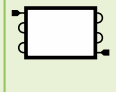

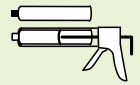

AUDI (.../...)

							PA	CA	NEW	ES			
A3 (2003>)	1.8 TFSi	BYT	08/2006 ►	**817777**	+	**509790**	**698800**	**698801**	**699357**		120 CC	**699935**	>ch 8E-7-069 491
A3 (2003>)	1.9 TDi	BKC, BLS, BXE	01/2004 ► 09/2006	**817777**	+	**509790**		**715665**	**699357**		120 CC	**699935**	RHD
A3 (2003>)	1.9 TDi	BKC, BLS, BXE	01/2004 ► 09/2006	**817777**	+	**509790**	**698800**	**698801**	**699357**		120 CC	**699935**	
A3 (2003>)	2.0 FSi 16V	AXW, BLR, BLX/Y, BMB, BVY/Z	05/2003 ► 01/2005	**817777**	+	**509790**		**715665**	**699357**		120 CC	**699935**	ch 8P-4-119 608> / RHD
A3 (2003>)	2.0 FSi 16V	AXW, BLR, BLX/Y, BMB, BVY/Z	05/2003 ► 01/2005	**817777**	+	**509790**	**698800**	**698801**	**699357**		120 CC	**699935**	ch 8P-4-119 608>
A3 (2003>)	2.0 TDi 16V	AZV, BKD, BMM	01/2004 ►	**817777**	+	**509790**		**715665**	**813174**		120 CC	**699935**	ch 8P-4-119 608>ch 8P-6A112 109 / RHD
A3 (2003>)	2.0 TDi 16V	BMM, BMN, BUY, BMN	06/2005 ► 09/2006	**817777**	+	**509790**		**715665**	**699357**		120 CC	**699935**	>ch 8E-7-069 491 / RHD
A3 (2003>)	2.0 TDi 16V	AZV, BKD, BMM	01/2004 ►	**817777**	+	**509790**	**698800**	**698801**	**813174**		120 CC	**699935**	ch 8P-4-119 608>ch 8P-6A112 109
A3 (2003>)	2.0 TDi 16V	BMM, BMN, BUY, BMN	06/2005 ► 09/2006	**817777**	+	**509790**	**698800**	**698801**	**699357**		120 CC	**699935**	>ch 8E-7-069 491
A3 (2003>)	2.0 TFSi 16V	AXX, BWA	09/2004 ►	**817777**	+	**509790**		**715665**	**699357**		120 CC	**699935**	>ch 8E-7-069 491 / RHD
A3 (2003>)	2.0 TFSi 16V	AXX, BWA	09/2004 ►	**817777**	+	**509790**	**698800**	**698801**	**699357**		120 CC	**699935**	>ch 8E-7-069 491
A4 (94>2000)	1.6 i	ADP	11/1994 ► 09/1996	**816967**			**698164**	**715578**	**699222**	**699722**	250 CC	**699935**	
A4 (94>2000)	1.6 i	AHL	10/1996 ► 12/1998	**816967**		**508881**	**698164**	**715578**	**699376**				
A4 (94>2000)	1.6 i	AHL, ARM, ANA	01/1999 ► 11/2000	**816967**		**509733**	**698164**	**715578**	**699376**				
A4 (94>2000)	1.8 i 20V	ADR, AFY, ARG	11/1994 ► 07/1997	**816967**			**698164**	**715578**	**699222**	**699722**	250 CC	**699935**	
A4 (94>2000)	1.8 i 20V	ADR, AFY	08/1997 ► 12/1998	**816967**		**508881**	**698164**	**715578**	**699222**	**699722**	250 CC	**699935**	ch 8D-W-000 001>ch 8D-T-200000
A4 (94>2000)	1.8 i 20V	ADR, AFY, APT, ARG	02/1999 ► 11/2000	**816967**		**509733**	**698164**	**715578**	**699222**	**699722**	250 CC	**699935**	
A4 (94>2000)	1.8 i Turbo 20V	AEB, AJL, APU, ARK	11/1994 ► 07/1997	**816967**			**698164**	**715578**	**699222**	**699722**	250 CC	**699935**	
A4 (94>2000)	1.8 i Turbo 20V	APU, ARK	08/1997 ► 12/1998	**816967**		**508881**	**698164**	**715578**	**699222**	**699722**	250 CC	**699935**	ch 8D-V-006772>
A4 (94>2000)	1.8 i Turbo 20V	AEB, AJL, ANB, APU, ARK, AWT	01/1999 ► 11/2000	**816967**		**509733**	**698164**	**715578**	**699222**	**699722**	250 CC	**699935**	
A4 (94>2000)	2.4 i V6	AFM	07/1995 ► 01/1996	**816967**			**698164**	**715578**		**699725**	115 CC	**699935**	>ch 8D-T-127954, ch 8DT160000
A4 (94>2000)	2.4 i V6	AFM	02/1996 ► 07/1997	**816967**			**698164**	**715578**		**699725**	115 CC	**699935**	>ch 8D-T-200000
A4 (94>2000)	2.4 i V6	AGA, AJG, ALF, AML, APS/Z, ARJ	08/1997 ► 12/1998	**816967**		**508881**	**698164**	**715578**	**813166**		245 CC		
A4 (94>2000)	2.4 i V6	AML, APS, APZ, ARJ	02/1999 ► 11/2000	**816967**		**509733**	**698164**	**715578**	**813166**		245 CC		
A4 (94>2000)	2.6 i V6	ABC, ACZ	11/1994 ► 07/1998	**816967**		**508881**	**698164**	**715578**		**699725**	115 CC	**699935**	>ch 8D-T-100 000, ch 8D-T-127954
A4 (94>2000)	2.6 i V6	ACZ	08/1997 ► 12/1998	**816967**		**508881**	**698164**	**715578**		**699725**	115 CC	**699935**	>ch 8D-V-400 000
A4 (94>2000)	1.9 TDi	1Z, AFF, AFN, AHH, AHU	11/1994 ► 07/1997	**816967**			**698164**	**715578**	**699222**	**699722**	250 CC	**699935**	

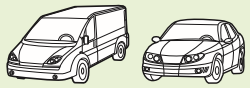

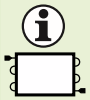

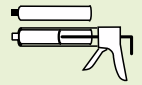

AUDI (.../...)

							PA	CA	NEW	ES			
A4 (94>2000)	1.9 TDi	AFN, AHU, AHH, AFF	08/1997 ► 12/1998	**816967**		**508881**	**698164**	**715578**	**699222**	**699722**	250 CC	**699935**	ch 8D-V-006772>
A4 (94>2000)	1.9 TDi	AJM	08/1998 ► 12/1998	**816967**		**508881**	**698164**	**715578**	**813166**		245 CC		
A4 (94>2000)	1.9 TDi	AFN, AHH, AHU	01/1999 ► 11/2000	**816967**		**509733**	**698164**	**715578**	**699222**	**699722**	250 CC	**699935**	
A4 (94>2000)	1.9 TDi	AJM	01/2000 ► 10/2000	**817840**		**509501**	**698164**	**715578**					
A4 (94>2000)	1.9 TDi Quattro	AFN, AVG	08/1997 ► 11/2000	**816967**		**509501**	**698164**	**715578**	**699222**	**699722**	250 CC	**699935**	
A4 (94>2000)	2.5 TDi V6 24V	AFB, AKN	11/1997 ► 01/1999	**817840**		**509501**	**698164**	**715578**	**699275**	**699775**	250 CC	**699935**	
A4 (94>2000)	2.5 TDi V6 24V	AKN	02/1999 ► 10/2000	**817840**		**509501**	**698164**	**715578**	**699275**	**699775**	250 CC	**699935**	
A4 (2000>2004)	1.6 i	AHL, ARM, ANA	11/2000 ► 01/2003	**817569**		**509907**	**698606**	**698683**	**813190**				
A4 (2000>2004)	1.6 i	AHL, ARM, ANA	02/2003 ► 12/2004	**817741**		**509907**	**698606**	**698683**	**813150**		100 CC		
A4 (2000>2004)	1.8 i Turbo 20V	AMB, AVJ, BEX, BFB	11/2000 ► 01/2003	**817569**		**509907**	**698606**	**698683**	**813190**				
A4 (2000>2004)	1.8 i Turbo 20V	AMB, AVJ, BEX, BFB	02/2003 ► 12/2004	**817741**		**509907**	**698606**	**698683**	**813150**		100 CC		
A4 (2000>2004)	2.0 i 20V, 2.0 FSi	ALT, AWA	11/2000 ► 01/2003	**817569**		**509907**	**698606**	**698683**	**813190**				
A4 (2000>2004)	2.0 i 20V, 2.0 FSi	ALT, AWA	02/2003 ► 12/2004	**817741**		**509907**	**698606**	**698683**	**813150**		100 CC		
A4 (2000>2004)	1.9 TDi	AVB, AVF, AWX	12/2000 ► 01/2003	**817569**			**698606**	**698683**	**699380**		180 CC	**699935**	>ch 8E-3-285 000
A4 (2000>2004)	1.9 TDi	AVF, AVB, BKE	06/2003 ► 12/2004	**817741**		**509907**	**698606**	**698683**	**813150**		100 CC		
A4 (2000>2004)	2.5 TDi V6 24V	AKE, AYM, BFC	12/2000 ► 01/2003	**817569**			**698606**	**698683**	**699381**		180 CC	**699935**	>ch 8E-3-285 000
A4 (2004>)	1.6 i	ALZ	11/2004 ► 03/2006	**818190**		**509907**	**698606**	**698683**	**813150**		100 CC		
A4 (2004>)	1.8 i Turbo 20V	BFB	11/2004 ►	**818190**		**509907**	**698606**	**698683**	**813150**		100 CC		
A4 (2004>)	2.0 i 20V	ALT	11/2004 ►	**818190**		**509907**	**698606**	**698683**	**813150**		100 CC		
A4 (2004>)	2.0 TDi, 2.0 TDi 16V	BLB, BNA, BPW, BRE/F, BVF/G	11/2004 ►	**818190**		**509907**	**698606**	**698683**	**813150**		100 CC		
A4 (2004>)	2.0 TFSi 16V	BUL, BGB	11/2004 ► 03/2006	**818190**		**509907**	**698606**	**698683**	**813150**		100 CC		
A4 (2004>)	1.9 TDi	BKE, BRB	11/2004 ►	**818190**		**509907**	**698606**	**698683**	**813150**		100 CC		
A6 (97>2001)	ALL	ALL	04/1997 ► 11/1998					**698682 (+)**					> 4B-X-045 000
A6 (97>2001)	ALL	ALL	11/1998 ► 04/1999					**698683 (-)**					>4B-X-045 001
A6 (97>2001)	ALL	ALL	11/1998 ► 05/2001				**698606 (+)**	**698683 (+)**					>4B-X-045 000
A6 (97>2001)	1.8 i 20V	AFY, AJP, AQE, ARH	04/1997 ► 03/1999	**817666**		**508881**			**699222**	**699722**	250 CC	**699935**	
A6 (97>2001)	1.8 i Turbo 20V	AEB, AJL, APU	04/1997 ► 03/1999	**817666**		**508881**			**699222**	**699722**	250 CC	**699935**	>ch 4B-1-068 908

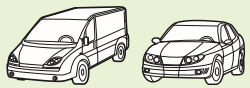

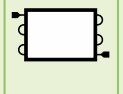

PA

CA

NEW

ES

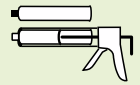

AUDI (.../...)

A6 (97>2001)	1.8 i 20V, Turbo	AEB, AJL, APU	04/1999 ► 10/2000	**817666**					**699222**	**699722**	250 CC	**699935**	>ch 4B-1-068 908
A6 (97>2001)	1.8 i Turbo 20V	AFY, AJP, ANB, ARH/K, AWT	04/1999 ► 10/2000	**817666**					**699222**	**699722**	250 CC	**699935**	>ch 4B-1-068 908
A6 (97>2001)	1.8 i 20V, Turbo	AFY, AJP, ANB, ARH/K, AWT	11/2000 ► 05/2001	**817666**		**509501**							ch 4B-X-090 001>
A6 (97>2001)	1.8 i Turbo 20V	AJL, APU	11/2000 ► 05/2001	**817666**		**509501**							ch 4B-X-090 001>
A6 (97>2001)	1.8 i 20V, Turbo	AFY, AJP, AQE, ARH	11/2000 ► 05/2001	**817666**		**509733**							ch 4B-X-090 001>
A6 (97>2001)	1.8 i Turbo 20V	AJL, APU, ARK, AWT, ANB	11/2000 ► 05/2001	**817666**		**509733**							ch 4B-X-090 001>
A6 (97>2001)	2.4 i V6, 2.4 V6 30V	AJG, ALF/W, APC/S/Z, ARJ/N	04/1997 ► 03/1999	**817666**		**508881**			**813166**		245 CC		>ch 4B-X-090 000
A6 (97>2001)	2.4 i V6, 2.4 V6 30V	AMM/L, APC/S/Z, ARJ/N	03/1999 ► 05/2001	**817666**		**509733**			**813166**		245 CC		ch 4B-X-090 001>
A6 (97>2001)	2.4 i V6, 2.4 V6 30V	AMM/L, APC/S/Z, ARJ/N	03/1999 ► 05/2001	**817666**		**509501**			**813166**		245 CC		ch 4B-X-090 001>
A6 (97>2001)	1.9 TDi	AFN, AVG	04/1997 ► 10/2000	**817666**		**508881**			**699222**	**699722**	250 CC	**699935**	>ch 4B-X-090 000
A6 (97>2001)	1.9 TDi	AFN, AVG	11/2000 ► 05/2001	**817666**		**509733**			**699376**				ch 4B-X-090 001>
A6 (97>2001)	1.9 TDi	AFN, AVG	11/2000 ► 05/2001	**817666**		**509501**			**699376**				ch 4B-X-090 001>
A6 (97>2001)	1.9 TDi	AJM	01/1998 ► 07/1998	**817997**		**508881**			**699222**	**699722**	250 CC	**699935**	
A6 (97>2001)	1.9 TDi	AJM	08/1998 ► 04/2000	**817997**		**509501**			**699222**	**699722**	250 CC	**699935**	>ch 4B-1-068 908
A6 (97>2001)	1.9 TDi	AJM	05/2000 ► 05/2001	**817997**		**509704**			**699222**	**699722**	250 CC	**699935**	>ch 4B-1-068 908
A6 (97>2001)	2.5 TDi V6 24V	AFB, AKE, AKN	04/1997 ► 03/1999	**817665**		**508881**			**699275**	**699775**	250 CC	**699935**	>ch X-200000
A6 (97>2001)	2.5 TDi V6 24V	AFB, AKE, AKN	03/1999 ► 05/2001	**817665**		**509501**			**699275**	**699775**	250 CC	**699935**	>ch X-200000
A6 (97>2001)	2.5 TDi V6 24V	AFB, AKN	03/1999 ► 05/2001	**817665**		**509733**			**699275**	**699775**	250 CC	**699935**	>ch X-200000
A6 (97>2001)	2.5 TDi V6 24V	AKE	05/2000 ► 05/2001	**817665**		**509704**			**699275**	**699775**	250 CC	**699935**	ch 4B-1-000 001>

BMW

3 SERIES E46	1.8 i	N42B18VVT	05/2001 ►	**817383**		**509558**	**698489**	**698750**					
3 SERIES E46	1.9 i	M43B19-E46	03/1998 ► 09/2001	**817383**		**509558**	**698489**	**698750**					
3 SERIES E46	2.0 i	M43B20, M52B20-EU3, N42B20	03/1998 ►	**817383**		**509558**	**698489**	**698750**	**813151**		160 CC		
3 SERIES E46	2.2 i 24V	M54B22	07/2000 ►	**817383**		**509558**	**698489**	**698750**	**813151**		160 CC		
3 SERIES E46	2.5 i	M52B25-EU3, M54B25	03/1998 ► 12/2000	**817383**		**509558**	**698489**	**698750**	**813151**		160 CC		
3 SERIES E46	2.5 ti	M54B25	05/2001 ► 12/2002	**817383**		**509558**	**698489**	**698750**					
3 SERIES E46	2.5 i 24V	M54B25, M54B25-6S5	01/2003 ►	**817383**		**509558**	**698489**	**698750**					

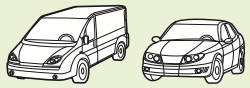

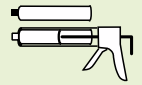

							PA	CA	NEW	ES			
BMW (.../...)													
3 SERIES E46	2.8 i	M52B28-EU3	03/1998 ► 12/2000	**817383**		**509558**	**698489**	**698750**					
3 SERIES E46	3.0 i 24V	M54B30, M54B30-231	01/1999 ►	**817383**		**509558**	**698489**	**698750**					
3 SERIES E46	2.0 TD	M47D20, M47D20TU, M47D20TUUL	03/1998 ►	**817405**		**509558**	**698489**	**698750**					
3 SERIES E46	2.0 TD	M47D20UL	09/2001 ►	**817405**		**509558**	**698489**	**698750**					
3 SERIES E46	3.0 TD	M57D30-183, M57D30-204 M57D30TU	09/1999 ► 02/2003	**817405**		**509558**	**698489**	**698750**					
5 SERIES E39	2.0 i 24V	M52B20	07/1996 ► 09/1997	**817607**		**509392**		**698246**					
5 SERIES E39	2.0 i 24V	M52B20	07/1996 ► 09/1997	**817248**		**509392**		**698246**					
5 SERIES E39	2.0 i 24V	M52B20, M52B20-EU3	09/1998 ► 04/2003	**817607**		**509558**		**698246**					
5 SERIES E39	2.2 i	M54B22	07/2000 ► 04/2003	**817607**		**509558**		**698246**					
5 SERIES E39	2.5 i	M52B25	09/1995 ► 09/1997	**817607**		**509392**		**698246**		**699823**	160 CC	**699935**	
5 SERIES E39	2.5 i	M52B25	09/1995 ► 09/1997	**817248**		**509392**		**698246**		**699823**	160 CC	**699935**	
5 SERIES E39	2.5 i	M52B25	10/1997 ► 04/2003	**817607**		**509392**		**698246**	**813151**		160 CC		
5 SERIES E39	2.5 i	M52B25-EU3, M54B25	07/1999 ► 04/2003	**817607**		**509558**		**698246**					
5 SERIES E39	2.8 i	M52B28-EU3	07/1999 ► 04/2003	**817607**		**509558**		**698246**					
5 SERIES E39	3.0 i 24V	M54B30-231	07/2000 ► 04/2003	**817607**		**509558**		**698246**					
5 SERIES E39	3.5 i	M62B35	07/1996 ► 09/1997	**817248**		**509558**		**698246**	**699321**		160 CC	**699935**	
5 SERIES E39	3.5 i	M62B35, M62B35-245	07/1996 ► 04/2003	**817607**		**509558**		**698246**	**699321**		160 CC	**699935**	
5 SERIES E39	2.0 d	M47D20	01/2000 ► 04/2003	**817561**		**509558**		**698246**					
5 SERIES E39	2.5 TDs	M51D25	10/1995 ► 09/1997	**817248**		**509393**		**698246**	**699320**		160 CC	**699935**	
5 SERIES E39	2.5 TDs	M51D25	10/1995 ► 09/1997	**817607**		**509393**		**698246**	**699320**		160 CC	**699935**	
5 SERIES E39	2.5 TD	M51D25	09/1997 ► 09/1997	**817248**		**509393**		**698246**					
5 SERIES E39	2.5 TD, TDS	M51D25	09/1997 ► 04/2003	**817607**		**509393**		**698246**	**699320**		160 CC	**699935**	
5 SERIES E39	2.5 D	M57D25	01/2000 ► 04/2003	**817561**		**509558**		**698246**					
5 SERIES E39	3.0 D	M57D30-183	09/1998 ► 09/2000	**817561**		**509558**		**698246**					
CITROËN													
C3	1.1 i	TU1JP	04/2002 ► 07/2004	**814095**		**509705**	**698664 (-/M+)**	**698714 (A+)**	**813189**	**813689**	135 CC	**699935**	ch 10163 >

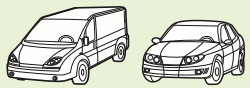

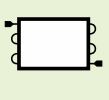

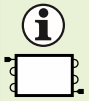

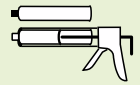

CITROËN (.../...)

								PA	CA	NEW	ES			
C3	1.4 i, 1.4 i 16V	ET3J4, TU3JP	04/2002 ► 07/2004	**814095**	+	**509705**	**698664 (-/M+)**	**698714 (A+)**	**813189**	**813689**	135 CC	**699935**	ch 10163 >
C3	1.6 i 16V	TU5JP4	04/2002 ► 07/2004	**814095**	+	**509705**	**698664 (-/M+)**	**698714 (A+)**	**813189**	**813689**	135 CC	**699935**	ch 10163 >
C3	1.4 HDi 16V	DV4TED4	04/2002 ► 07/2004	**814095**	+	**509705**	**698664 (-/M+)**	**698714 (A+)**	**813189**	**813689**	135 CC	**699935**	ch 10163 >
C3	1.4 HDi	DV4TD	04/2002 ► 07/2004	**814095**	+	**509705**	**698664 (-/M+)**	**698714 (A+)**	**813189**	**813689**	135 CC	**699935**	ch 10163 >
C3 PLURIEL	1.4 i	TU3JP	05/2003 ► 05/2004	**814095**	+	**509705**	**698664 (-/M+)**	**698714 (A+)**	**813189**	**813689**	135 CC	**699935**	ch 10072 >
C3 PLURIEL	1.6 i 16V	TU5JP4	05/2003 ► 05/2004	**814095**	+	**509705**	**698664 (-/M+)**	**698714 (A+)**	**813189**	**813689**	135 CC	**699935**	ch 10072 >
C3 PLURIEL	1.4 HDi	DV4TD	02/2004 ► 05/2004	**814095**	+	**509705**	**698664 (-/M+)**	**698714 (A+)**	**813189**	**813689**	135 CC	**699935**	ch 10072 >
C4	1.4 i 16V	ET3J4	11/2004 ►	**818171**	+	**515097**	**698664 (M+)**	**698714 (A+)**			135 CC	**699935**	
C4	1.6 i 16V	TU5JP4	11/2004 ►	**818171**	+	**515097**	**698664 (M+)**	**698714 (A+)**			135 CC	**699935**	
C4	2.0 i 16V	EW10A, EW10J4S	11/2004 ►	**818170**	+	**515097**	**698664 (M+)**	**698714 (A+)**	**813162**		135 CC	**699935**	
C4	2.0 i 16V	EW10J4	11/2004 ►	**818171**	+	**515097**	**698664 (M+)**	**698714 (A+)**	**813162**		135 CC	**699935**	
C4	1.6 HDi 16V	DV6ATED4, DV6TED4	11/2004 ►	**818170**	+	**515097**	**698664 (M+)**	**698714 (A+)**	**813162**		135 CC	**699935**	
C4	2.0 HDi 16V	DW10BTED4	11/2004 ►	**818170**	+	**515097**	**698664 (M+)**	**698714 (A+)**	**813164**		135 CC	**699935**	
C4 PICASSO (2006>)	1.6 HDi 16V	DV6TED4	09/2006 ► 01/2008	**818171**	+		**715554**	**715555 (A+)**	**813162**		135 CC	**699935**	
C4 PICASSO (2006>)	1.8 i 16V	EW7A	09/2006 ► 01/2008	**818171**	+		**715554**	**715555 (A+)**	**813162**		135 CC	**699935**	
C4 PICASSO (2006>)	2.0 i 16V	EW10A	09/2006 ► 01/2008	**818171**	+		**715554**	**715555 (A+)**	**813162**		135 CC	**699935**	
C4 PICASSO (2006>)	2.0 HDi 16V	DW10BTED4	09/2006 ► 01/2008	**818171**	+		**715554**	**715555 (A+)**	**813161**		135 CC	**699935**	
C5 (2001>2004)	1.8 i 16V	EW7J4	07/2002 ► 08/2004	**817464**	+	**509525**	**698540**	**698541**	**813158**				
C5 (2001>2004)	2.0 i 16V, 2.0 HPI	EW10J4, EW10D	07/2002 ► 08/2004	**817464**	+	**509525**	**698540**	**698541**	**813158**				
C5 (2001>2004)	2.0 HDi	DW10TD, DW10ATED	02/2001 ► 12/2001	**817464**	+	**509525**	**698540**	**698541**	**699155**	**699655**	265 CC	**699937**	
C5 (2001>2004)	2.0 HDi	DW10TD, DW10ATED	01/2002 ► 05/2002	**817464**	+	**509525**	**698540**	**698541**					
C5 (2001>2004)	2.0 HDi	DW10TD, DW10ATED	06/2002 ► 08/2004	**817464**	+	**509525**	**698540**	**698541**	**699272**	**699772**	135 CC	**699935**	ch 9338>
C5 (2001>2004)	2.2 HDi 16V	DW12TED4	02/2001 ► 06/2002	**817464**	+	**509525**	**698540**	**698541**	**699236**	**699736**	135 CC	**699935**	>ch 9337
C5 (2001>2004)	2.2 HDi 16V	DW12TED4	06/2002 ► 08/2004	**817464**	+	**509525**	**698540**	**698541**	**699272**	**699772**	135 CC	**699935**	ch 9338>
XANTIA (97>2002)	1.6 i	XU5JP	12/1997 ► 05/2002	**816803**			**698146 (+)**		**699236**	**699736**	135 CC	**699935**	
XANTIA (97>2002)	1.8 i, 1.8 i 16V	XU7JB, XU7JP	12/1997 ► 05/2002	**816803**			**698146 (+)**		**699236**	**699736**	135 CC	**699935**	
XANTIA (97>2002)	2.0 i Turbo CT	XU10J2CTEL3	12/1997 ► 05/2002	**816803**		**508835**	**698146 (+)**		**699236**	**699736**	135 CC	**699935**	

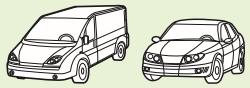						PA	CA	NEW	ES	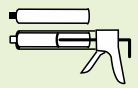		
CITROËN (.../...)												
XANTIA (97>2002)	2.0 i, 2.0 i 16V	XU10J2C, XU10J4R	12/1997 ► 05/2002	**816803**			**698146 (+)**		**699236**	**699736**	135 CC	**699935**	
XANTIA (97>2002)	1.9 SD, TD	XUD9BTF, XUD9SD	12/1997 ► 05/2002	**816803**		**508836**	**698146 (+)**		**699155**	**699655**	265 CC	**699937**	
XANTIA (97>2002)	1.9 SD, TD	XUD9BTF, XUD9SD	10/1999 ► 05/2002	**816803**		**508835**	**698146 (+)**		**699155**	**699655**	265 CC	**699937**	
XANTIA (97>2002)	2.0 HDi	DW10ATED	10/1998 ► 05/2002	**816803**		**508835**	**698146 (+)**		**699155**	**699655**	265 CC	**699937**	
XANTIA (97>2002)	2.0 HDi	DW10ATED	10/1998 ► 05/2002	**816803**		**508836**	**698146 (+)**		**699155**	**699655**	265 CC	**699937**	
XANTIA (97>2002)	2.1 TD 12V	XUD11BTE	12/1997 ► 05/2002	**816803**		**508835**	**698146 (+)**		**699155**	**699655**	265 CC	**699937**	
XSARA (97>2000)	1.4 i	TU3JP	07/1997 ► 12/1999	**817230**		**508837**	**698146 (+)**		**699026**	**699526**	135 CC	**699935**	>ch 8434 / RHD
XSARA (97>2000)	1.4 i	TU3JP	07/1997 ► 12/1999	**817230**		**508837**	**698146 (-)**		**699026**	**699526**	135 CC	**699935**	>ch 8434
XSARA (97>2000)	1.4 i	TU3JP	12/1999 ► 08/2000	**817230**		**509401**	**698146 (+)**		**699026**	**699526**	135 CC	**699935**	ch 8435> / RHD
XSARA (97>2000)	1.4 i	TU3JP	12/1999 ► 08/2000	**817230**		**509401**	**698146 (-)**		**699026**	**699526**	135 CC	**699935**	ch 8435>
XSARA (97>2000)	1.6 i	TU5JP	07/1997 ► 12/1999	**817230**		**508837**	**698146 (+)**		**699026**	**699526**	135 CC	**699935**	>ch 8434 / RHD
XSARA (97>2000)	1.6 i	TU5JP	07/1997 ► 12/1999	**817230**		**508837**	**698146 (-)**		**699026**	**699526**	135 CC	**699935**	>ch 8434
XSARA (97>2000)	1.6 i	TU5JP	12/1999 ► 08/2000	**817230**		**509401**	**698146 (+)**		**699026**	**699526**	135 CC	**699935**	ch 8435> / RHD
XSARA (97>2000)	1.6 i	TU5JP	12/1999 ► 08/2000	**817230**		**509401**	**698146 (-)**		**699026**	**699526**	135 CC	**699935**	ch 8435>
XSARA (97>2000)	1.8 i, 1.8 i 16V	XU7	07/1997 ► 12/1999	**817230**		**508837**	**698146 (+)**		**699236**	**699736**	135 CC	**699935**	>ch 8434 / RHD
XSARA (97>2000)	1.8 i, 1.8 i 16V	XU7	07/1997 ► 12/1999	**817230**		**508837**	**698146 (-)**		**699236**	**699736**	135 CC	**699935**	>ch 8434
XSARA (97>2000)	1.8 i, 1.8 i 16V	XU7	12/1999 ► 08/2000	**817230**		**509401**	**698146 (+)**		**699236**	**699736**	135 CC	**699935**	ch 8435> / RHD
XSARA (97>2000)	1.8 i, 1.8 i 16V	XU7	12/1999 ► 08/2000	**817230**		**509401**	**698146 (-)**		**699236**	**699736**	135 CC	**699935**	ch 8435>
XSARA (97>2000)	2.0 i 16V	XU10J4	01/1998 ► 12/1999	**817230**		**508837**	**698146 (+)**		**699236**	**699736**	135 CC	**699935**	>ch 8434 / RHD
XSARA (97>2000)	2.0 i 16V	XU10J4	01/1998 ► 12/1999	**817230**		**508837**	**698146 (-)**		**699236**	**699736**	135 CC	**699935**	>ch 8434
XSARA (97>2000)	2.0 i 16V	XU10J4	12/1999 ► 08/2000	**817230**		**509401**	**698146 (+)**		**699236**	**699736**	135 CC	**699935**	ch 8435> / RHD
XSARA (97>2000)	2.0 i 16V	XU10J4	12/1999 ► 08/2000	**817230**		**509401**	**698146 (-)**		**699236**	**699736**	135 CC	**699935**	ch 8435>
XSARA (97>2000)	1.5 D	TUD5	03/1998 ► 08/2000	**817229**		**508873**	**698146 (+)**		**699026**	**699526**	135 CC	**699935**	RHD
XSARA (97>2000)	1.5 D	TUD5	03/1998 ► 08/2000	**817229**		**508873**	**698146 (-)**		**699026**	**699526**	135 CC	**699935**	
XSARA (97>2000)	1.8 D	XUD7	03/1998 ► 12/1999	**817042**		**508837**	**698146 (+)**		**699236**	**699736**	135 CC	**699935**	>ch 8434 / RHD
XSARA (97>2000)	1.8 D	XUD7	03/1998 ► 12/1999	**817042**		**508837**	**698146 (-)**		**699236**	**699736**	135 CC	**699935**	>ch 8434
XSARA (97>2000)	1.8 D	XUD7	01/2000 ► 08/2000	**817042**			**698146 (+)**		**699236**	**699736**	135 CC	**699935**	RHD

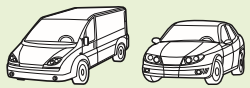

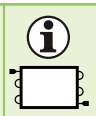

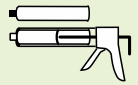

CITROËN (.../...)

XSARA (97>2000)	1.8 D	XUD7	01/2000 ► 08/2000	**817042**			**698146 (-)**		**699236**	**699736**	135 CC	**699935**	
XSARA (97>2000)	1.9 D	DW8	09/1998 ► 08/2000	**817042**		**508873**	**698146 (+)**		**699236**	**699736**	135 CC	**699935**	RHD
XSARA (97>2000)	1.9 D	DW8	09/1998 ► 08/2000	**817042**		**508873**	**698146 (-)**		**699236**	**699736**	135 CC	**699935**	
XSARA (97>2000)	1.9 SD	XUD9BSD, XUD9SD, XUD9TE	03/1998 ► 12/1999	**817042**		**508837**	**698146 (+)**		**699236**	**699736**	135 CC	**699935**	>ch 8434 / RHD
XSARA (97>2000)	1.9 SD	XUD9BSD, XUD9SD, XUD9TE	03/1998 ► 12/1999	**817042**		**508837**	**698146 (-)**		**699236**	**699736**	135 CC	**699935**	>ch 8434
XSARA (97>2000)	1.9 TD	XUD9TE	07/1997 ► 02/1998	**817042**		**508837**	**698146 (+)**		**699236**	**699736**	135 CC	**699935**	>ch 8434 / RHD
XSARA (97>2000)	1.9 TD	XUD9TE	07/1997 ► 02/1998	**817042**		**508837**	**698146 (-)**		**699236**	**699736**	135 CC	**699935**	>ch 8434
XSARA (97>2000)	2.0 HDi	DW10TD	03/1999 ► 12/1999	**817042**		**508837**	**698146 (+)**		**699236**	**699736**	135 CC	**699935**	>ch 8434 / RHD
XSARA (97>2000)	2.0 HDi	DW10TD	03/1999 ► 12/1999	**817042**		**508837**	**698146 (-)**		**699236**	**699736**	135 CC	**699935**	>ch 8434
XSARA (97>2000)	2.0 HDi	DW10TD	01/2000 ► 08/2000	**817042**			**698146 (+)**		**699236**	**699736**	135 CC	**699935**	RHD
XSARA (97>2000)	2.0 HDi	DW10TD	01/2000 ► 08/2000	**817042**			**698146 (-)**		**699236**	**699736**	135 CC	**699935**	
XSARA (2000>)	1.4 i	TU3JP	09/2000 ►	**817508**	+	**509791**	**698657 (A+)**	**715629 (A+)**	**813189**	**813689**	135 CC	**699935**	
XSARA (2000>)	1.4 i	TU3JP	09/2000 ►	**817508**	+	**509791**	**698731 (M+)**	**715629 (A+)**	**813189**	**813689**	135 CC	**699935**	
XSARA (2000>)	1.6 i 16V	TU5JP4	09/2000 ► 11/2001	**817508**	+	**509791**	**698657 (A+)**	**715629 (A+)**	**813189**	**813689**	135 CC	**699935**	>ch 9155
XSARA (2000>)	1.6 i 16V	TU5JP4	09/2000 ► 11/2001	**817508**	+	**509791**	**698657 (A+)**	**715629 (A+)**	**813189**	**813689**	135 CC	**699935**	>ch 9155
XSARA (2000>)	1.6 i 16V	TU5JP4	09/2000 ► 11/2001	**817508**	+	**509791**	**698731 (M+)**	**715629 (A+)**	**813189**	**813689**	135 CC	**699935**	>ch 9155
XSARA (2000>)	1.6 i 16V	TU5JP4	09/2000 ► 11/2001	**817508**	+	**509791**	**698731 (M+)**	**715629 (A+)**	**813189**	**813689**	135 CC	**699935**	>ch 9155
XSARA (2000>)	1.6 i 16V	TU5JP4	12/2001 ►	**817508**	+	**509791**	**698657 (A+)**	**715629 (A+)**	**813189**	**813689**	135 CC	**699935**	ch 9156>
XSARA (2000>)	1.6 i 16V	TU5JP4	12/2001 ►	**817508**	+	**509791**	**698657 (A+)**	**715629 (A+)**	**813189**	**813689**	135 CC	**699935**	ch 9156>
XSARA (2000>)	1.6 i 16V	TU5JP4	12/2001 ►	**817508**	+	**509791**	**698731 (M+)**	**715629 (A+)**	**813189**	**813689**	135 CC	**699935**	ch 9156>
XSARA (2000>)	1.6 i 16V	TU5JP4	12/2001 ►	**817508**	+	**509791**	**698731 (M+)**	**715629 (A+)**	**813189**	**813689**	135 CC	**699935**	ch 9156>
XSARA (2000>)	2.0 i 16V	EW10J4	09/2000 ►	**817508**	+	**509791**	**698657 (A+)**	**715629 (A+)**	**699216**	**699716**	135 CC	**699935**	
XSARA (2000>)	2.0 i 16V	XU10J4RS	09/2000 ►	**817230**			**698657 (A+)**	**715629 (A+)**	**699236**	**699736**	135 CC	**699935**	
XSARA (2000>)	2.0 i 16V	EW10J4	09/2000 ►	**817508**	+	**509791**	**698731 (M+)**	**715629 (A+)**	**699216**	**699716**	135 CC	**699935**	
XSARA (2000>)	2.0 i 16V	XU10J4RS	09/2000 ►	**817230**			**698731 (M+)**	**715629 (A+)**	**699236**	**699736**	135 CC	**699935**	
XSARA (2000>)	1.4 HDi	DV4TD	01/2003 ►	**817508**	+	**509791**	**698731 (M+)**	**715629 (A+)**	**813158**				
XSARA (2000>)	1.4 HDi	DV4TD	01/2003 ►	**817508**	+	**509791**	**698657 (A+)**	**715629 (A+)**	**813158**				

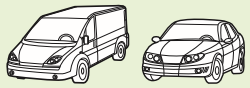

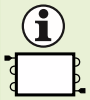

PA | CA | NEW | ES

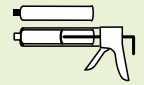

CITROËN (.../...)

XSARA (2000>)	1.9 D	DW8B	09/2000 ► 03/2001	**817508**		**509791**	**698731 (M+)**	**715629 (A+)**	**699236**	**699736**	135 CC	**699935**	>ch 8987
XSARA (2000>)	1.9 D	DW8B	09/2000 ► 11/2001	**817508**		**509791**	**698731 (M+)**	**715629 (A+)**	**699236**	**699736**	135 CC	**699935**	>ch 8987
XSARA (2000>)	1.9 D	DW8B	09/2000 ► 03/2001	**817508**		**509791**	**698657 (A+)**	**715629 (A+)**	**699236**	**699736**	135 CC	**699935**	>ch 8987
XSARA (2000>)	1.9 D	DW8B	09/2000 ► 11/2001	**817508**		**509791**	**698657 (A+)**	**715629 (A+)**	**699236**	**699736**	135 CC	**699935**	>ch 8987
XSARA (2000>)	1.9 D	DW8B	03/2001 ► 11/2001	**817508**		**509791**	**698731 (M+)**	**715629 (A+)**					>ch 8882
XSARA (2000>)	1.9 D	DW8B	03/2001 ► 11/2001	**817508**		**509791**	**698657 (A+)**	**715629 (A+)**					>ch 8882
XSARA (2000>)	1.9 D	DW8B	12/2001 ►	**817508**		**509791**	**698731 (M+)**	**715629 (A+)**	**699272**	**699772**	135 CC	**699935**	ch 9156>
XSARA (2000>)	1.9 D	DW8B	12/2001 ►	**817667**		**509791**	**698731 (M+)**	**715629 (A+)**	**699236**	**699736**	135 CC	**699935**	>ch 8987
XSARA (2000>)	1.9 D	DW8B	12/2001 ►	**817508**		**509791**	**698657 (A+)**	**715629 (A+)**	**699272**	**699772**	135 CC	**699935**	ch 9156>
XSARA (2000>)	1.9 D	DW8B	12/2001 ►	**817667**		**509791**	**698657 (A+)**	**715629 (A+)**	**699236**	**699736**	135 CC	**699935**	>ch 8987
XSARA (2000>)	2.0 HDi	DW10TD	09/2000 ► 03/2001	**817667**		**509791**	**698731 (M+)**	**715629 (A+)**	**699236**	**699736**	135 CC	**699935**	>ch 8987
XSARA (2000>)	2.0 HDi	DW10TD	09/2000 ► 03/2001	**817667**		**509791**	**698657 (A+)**	**715629 (A+)**	**699236**	**699736**	135 CC	**699935**	>ch 8987
XSARA (2000>)	2.0 HDi	DW10TD	12/2001 ►	**817667**		**509791**	**698731 (M+)**	**715629 (A+)**	**699272**	**699772**	135 CC	**699935**	ch 9156>
XSARA (2000>)	2.0 HDi	DW10ATED	12/2001 ►	**817508**		**509791**	**698731 (M+)**	**715629 (A+)**	**699272**	**699772**	135 CC	**699935**	ch 9156>
XSARA (2000>)	2.0 HDi	DW10TD	12/2001 ►	**817667**		**509791**	**698657 (A+)**	**715629 (A+)**	**699272**	**699772**	135 CC	**699935**	ch 9156>
XSARA (2000>)	2.0 HDi	DW10ATED	12/2001 ►	**817508**		**509791**	**698657 (A+)**	**715629 (A+)**	**699272**	**699772**	135 CC	**699935**	ch 9156>
XSARA PICASSO	1.6 i	TU5JP	12/1999 ► 12/2001	**817508**		**509791**	**698680**	**715612**	**699190**	**699690**	135 CC	**699935**	>ch 9162
XSARA PICASSO	1.6 i	TU5JP	01/2002 ► 11/2002	**817508**		**509791**	**698680**	**715612**	**813189**	**813689**	135 CC	**699935**	ch 9163>ch 9491
XSARA PICASSO	1.6 i	TU5JP	12/2002 ►	**817508**		**509791**	**698680**	**715612**	**813189**	**813689**			>ch 10527
XSARA PICASSO	1.8 i 16V	EW7J4, EW7J4	12/1999 ► 11/2002	**817508**		**509791**	**698680**	**715612**	**699216**	**699716**	135 CC	**699935**	>ch 9491
XSARA PICASSO	1.8 i 16V	EW7J4, EW7J4	12/2002 ►	**817508**		**509791**	**698680**	**715612**	**813189**	**813689**	135 CC	**699935**	ch 9492>ch 10047
XSARA PICASSO	2.0 i 16V	EW10J4	01/2003 ► 05/2004	**817508**		**509791**	**698680**	**715612**	**813189**	**813689**	135 CC	**699935**	>ch 10047
XSARA PICASSO	2.0 i 16V	EW10J4	06/2004 ►	**817508**		**509791**	**698680**	**715612**					>ch 10375
XSARA PICASSO	1.6 HDi	DV6TED4	03/2004 ►	**814080**		**509791**	**698680**	**715612**	**813158**				
XSARA PICASSO	2.0 HDi	DW10TD	12/1999 ► 10/2002	**817508**		**509791**	**698680**	**715612**	**699236**	**699736**	135 CC	**699935**	>ch 9027/78, ch 9491/FV
XSARA PICASSO	2.0 HDi	DW10TD	11/2002 ► 10/2003	**817508**		**509791**	**698680**	**715612**	**699272**	**699772**	135 CC	**699935**	ch 9492/FV>
XSARA PICASSO	2.0 HDi	DW10TD	11/2003 ►	**814080**		**509791**	**698680**	**715612**					

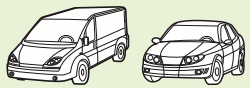

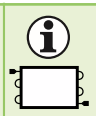

PA

CA

NEW

ES

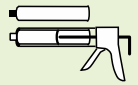

FIAT

BRAVA	1.2 i 16V	182B2.000	10/1998 ► 02/2001	**818009**		**508805**	**698689**		**699280**		80 CC	**699935**	RHD
BRAVA	1.2 i 16V	182B2.000	10/1998 ► 02/2001	**818009**		**508805**	**698197**	**698687**	**699280**		80 CC	**699935**	
BRAVA	1.4 i 12V	182A3.000, 182A5.000	06/1995 ► 10/1996	-		**508805**	**698689**		**699290**		150 CC	**699936**	>ch 4300174 / RHD
BRAVA	1.4 i 12V	182A3.000, 182A5.000	06/1995 ► 10/1996	-		**508805**	**698197**	**698687**	**699290**		150 CC	**699936**	>ch 4300174
BRAVA	1.4 i 12V	182A3.000, 182A5.000	11/1997 ► 09/1998	**818009**		**508805**	**698689**		**699290**		150 CC	**699936**	ch 4540396> / RHD
BRAVA	1.4 i 12V	182A3.000, 182A5.000	11/1997 ► 09/1998	**818009**		**508805**	**698197**	**698687**	**699290**		150 CC	**699936**	ch 4540396>
BRAVA	1.6 i 16V	182A4.000, 182A6.000	06/1995 ► 10/1997	-		**508805**	**698689**		**699289**		150 CC	**699936**	>ch 4540395 / RHD
BRAVA	1.6 i 16V	182A4.000, 182A6.000	06/1995 ► 10/1997	-		**508805**	**698197**	**698687**	**699289**		150 CC	**699936**	>ch 4540395
BRAVA	1.6 i 16V	182A4.000, 182A6.000	11/1997 ► 09/1998	**818009**		**508805**	**698689**		**699289**		150 CC	**699936**	ch 4540396> / RHD
BRAVA	1.6 i 16V	182A4.000, 182A6.000	11/1997 ► 09/1998	**818009**		**508805**	**698197**	**698687**	**699289**		150 CC	**699936**	ch 4540396>
BRAVA	1.8 i 16V	182A2.000	06/1995 ► 09/1998			**508805**	**698689**		**699290**		150 CC	**699936**	RHD
BRAVA	1.8 i 16V	182A2.000	06/1995 ► 09/1998			**508805**	**698197**	**698687**	**699290**		150 CC	**699936**	
BRAVA	1.8 i 16V	182A2.000	10/1998 ►	**818019**		**508805**	**698689**		**699290**		150 CC	**699936**	>ch 4873621 / RHD
BRAVA	1.8 i 16V	182A2.000	10/1998 ►	**818019**		**508805**	**698197**	**698687**	**699290**		150 CC	**699936**	>ch 4873621
BRAVA	1.9 TD	160A7.000, 182A7/A8.000	03/1996 ► 09/1998			**508805**	**698689**		**699290**		150 CC	**699936**	RHD
BRAVA	1.9 TD	160A7.000, 182A7/A8.000	03/1996 ► 09/1998			**508805**	**698197**	**698687**	**699290**		150 CC	**699936**	
BRAVO	1.2 i 16V	182B2.000	10/1998 ► 02/2001	**818009**		**508805**	**698689**		**699280**		80 CC	**699935**	RHD
BRAVO	1.2 i 16V	182B2.000	10/1998 ► 02/2001	**818009**		**508805**	**698197**	**698687**	**699280**		80 CC	**699935**	
BRAVO	1.4 i 12V	182A3.000, 182A5.000	06/1995 ► 10/1996			**508805**	**698689**		**699290**		150 CC	**699936**	>ch 4300174 / RHD
BRAVO	1.4 i 12V	182A3.000, 182A5.000	06/1995 ► 10/1996			**508805**	**698197**	**698687**	**699290**		150 CC	**699936**	>ch 4300174
BRAVO	1.4 i 12V	182A3.000, 182A5.000	11/1997 ► 09/1998	**818009**		**508805**	**698689**		**699290**		150 CC	**699936**	ch 4540396> / RHD
BRAVO	1.4 i 12V	182A3.000, 182A5.000	11/1997 ► 09/1998	**818009**		**508805**	**698197**	**698687**	**699290**		150 CC	**699936**	ch 4540396>
BRAVO	1.6 i 16V	182A4.000, 182A6.000	06/1995 ► 10/1997			**508805**	**698689**		**699289**		150 CC	**699936**	>ch 4540395 / RHD
BRAVO	1.6 i 16V	182A4.000, 182A6.000	06/1995 ► 10/1997			**508805**	**698197**	**698687**	**699289**		150 CC	**699936**	>ch 4540395
BRAVO	1.6 i 16V	182A4.000, 182A6.000	11/1997 ► 09/1998	**818009**		**508805**	**698689**		**699289**		150 CC	**699936**	ch 4540396> / RHD
BRAVO	1.6 i 16V	182A4.000, 182A6.000	11/1997 ► 09/1998	**818009**		**508805**	**698197**	**698687**	**699289**		150 CC	**699936**	ch 4540396>
BRAVO	1.8 i 16V	182A2.000	06/1995 ► 09/1998			**508805**	**698689**		**699290**		150 CC	**699936**	RHD

							PA	CA	NEW	ES			
FIAT (.../...)													
BRAVO	1.8 i 16V	182A2.000	06/1995 ► 09/1998			**508805**	**698197**	**698687**	**699290**		150 CC	**699936**	
BRAVO	1.8 i 16V	182A2.000	10/1998 ►	**818019**		**508805**	**698689**		**699290**		150 CC	**699936**	>ch 4873621 / RHD
BRAVO	1.8 i 16V	182A2.000	10/1998 ►	**818019**		**508805**	**698197**	**698687**	**699290**		150 CC	**699936**	>ch 4873621
BRAVO	1.9 TD	160A7.000, 182A7/A8.000	03/1996 ► 09/1998			**508805**	**698689**		**699290**		150 CC	**699936**	RHD
BRAVO	1.9 TD	160A7.000, 182A7/A8.000	03/1996 ► 09/1998			**508805**	**698197**	**698687**	**699290**		150 CC	**699936**	
PUNTO II (99>2003)	1.2 i, 1.2 i 16V	188A4.000, 188A5.000	07/1999 ► 01/2001	**817684**		**508291**	**698535 (+)**	**698839 (+)**	**699283**		100 CC	**699935**	type M Marelli
PUNTO II (99>2003)	1.2 i, 1.2 i 16V	188A4.000, 188A5.000	07/1999 ► 01/2001	**817684**		**509589**	**698535 (+)**	**698839 (+)**	**699283**		100 CC	**699935**	type M Marelli
PUNTO II (99>2003)	1.2 i, 1.2 i 16V	188A4.000, 188A5.000	07/1999 ► 11/2001	**817385**		**508291**	**698535 (+)**	**698839 (+)**	**699283**		100 CC	**699935**	type Valeo
PUNTO II (99>2003)	1.2 i, 1.2 i 16V	188A4.000, 188A5.000	07/1999 ► 11/2001	**817385**		**509589**	**698535 (+)**	**698839 (+)**	**699283**		100 CC	**699935**	type Valeo
PUNTO II (99>2003)	1.2 i, 1.2 i 16V	188A4.000, 188A5.000	12/2001 ► 06/2002	**818006**	+	**509592**	**698535 (+)**	**698839 (+)**	**699283**		100 CC	**699935**	type M Marelli
PUNTO II (99>2003)	1.2 i, 1.2 i 16V	188A4.000, 188A5.000	10/2002 ► 06/2003	**817385**			**698535 (+)**	**698839 (+)**	**699283**		100 CC	**699935**	type Valeo
PUNTO II (99>2003)	1.8 i 16V	183A1.000	07/1999 ► 06/2003	**817685**		**509714**	**698535 (+)**	**698839 (+)**	**699290**		150 CC	**699936**	type M Marelli
PUNTO II (99>2003)	1.8 i 16V	183A1.000	10/2002 ► 06/2003		+	**509592**	**698535 (+)**	**698839 (+)**	**699290**		150 CC	**699936**	type M Marelli
PUNTO II (99>2003)	1.9 D	188A3.000	07/1999 ► 04/2003	**817685**		**509714**	**698535 (+)**	**698839 (+)**	**699284**		100 CC	**699935**	type M Marelli
PUNTO II (99>2003)	1.9 JTD	188A2.000, 188A7.000	07/1999 ► 06/2003	**817685**		**509714**	**698535 (+)**	**698839 (+)**	**699284**		100 CC	**699935**	type M Marelli
PUNTO II (2003>)	1.2 i, 1.2 i Bipower	188A4.000	07/2003 ►	**818021**	+	**509592**	**698535**	**698839**	**813171**		50 CC		type M Marelli
PUNTO II (2003>)	1.2 i, 1.2 i Bipower	188A4.000	07/2003 ►	**817703**	+	**509592**	**698535**	**698839**	**813171**		50 CC		ch 8589>. Type Valeo
PUNTO II (2003>)	1.2 i 16V	188A5.000	07/2003 ►	**818021**	+	**509592**	**698535**	**698839**	**813171**		50 CC		type M Marelli
PUNTO II (2003>)	1.2 i 16V	188A5.000	07/2003 ► 07/2005	**817703**	+	**509592**	**698535**	**698839**	**813171**		50 CC		ch 8589>. Type Valeo
PUNTO II (2003>)	1.4 i 16V	843A1.000	07/2003 ►	**818021**	+	**509592**	**698535**	**698839**	**813171**		50 CC		type M Marelli
PUNTO II (2003>)	1.8 i 16V	188A6.000	07/2003 ►	**817685**		**509714**	**698535**	**698839**	**813167**		65 CC		type M Marelli
PUNTO II (2003>)	1.3 JTD 16V	188A9.000	07/2003 ►	**818021**	+	**509592**	**698535**	**698839**	**813167**		65 CC		type M Marelli
PUNTO II (2003>)	1.9 JTD	188A7.000	07/2003 ►	**817685**		**509714**	**698535**	**698839**	**813167**		65 CC		type M Marelli
FORD													
ESCORT (95>2001)	1.8 D	RTH	01/1995 ► 09/2001						**699119**	**699619**	200 CC	**699935**	
ESCORT (95>2001)	1.8 TD	RFD, RFS, RV	01/1995 ► 09/2001						**699119**	**699619**	200 CC	**699935**	
FIESTA (95>99)	1.2 i 16V	DHA	08/1995 ► 09/1999	**816992**		**509706**	**698201**	**715617**	**699330**	**699830**	207 CC	**699935**	

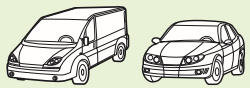			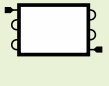			PA	CA	NEW	ES	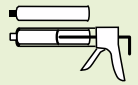	

FORD (.../...)

FIESTA (95>99)	1.3 i	J4C, JJA	08/1995 ► 08/1999	**816992**		**509706**	**698201**	**715617**	**699330**	**699830**	207 CC	**699935**	
FIESTA (95>99)	1.4 i 16V	FHA	01/1996 ► 08/1999	**816992**		**509706**	**698201**	**715617**	**699330**	**699830**	207 CC	**699935**	
FIESTA (95>99)	1.8 D	RTJ, RTK	08/1995 ► 08/1999	**816992**		**509706**	**698201**	**715617**					
FIESTA (99>2002)	1.2 i 16V	DHB, DHC, DHD	08/1999 ► 03/2002	**816992**		**509706**	**698201**	**715617**	**699330**	**699830**	207 CC	**699935**	
FIESTA (99>2002)	1.3 i	J4J, J4L, JJC, JJE	08/1999 ► 03/2002	**816992**		**509706**	**698201**	**715617**		**699834**			
FIESTA (99>2002)	1.4 i 16V	FHA, FHE	08/1999 ► 04/2000	**816992**		**509706**	**698201**	**715617**	**699330**	**699830**	207 CC	**699935**	
FIESTA (99>2002)	1.4 i 16V	FHA, FHE	05/2000 ► 03/2002	**816992**		**509706**	**698201**	**715617**	**699330**	**699830**	207 CC	**699935**	
FIESTA (99>2002)	1.6 i	L1T	02/2000 ► 01/2002	**816992**		**509706**	**698201**	**715617**					
FIESTA (99>2002)	1.8 D	RTJ	09/1999 ► 03/2000	**816992**		**509706**	**698201**	**715617**			200 CC	**699935**	
FIESTA (99>2002)	1.8 D	RTJ	03/2000 ► 03/2002	**816992**		**509706**	**698201**	**715617**	**699326**	**699826**	220 CC	**699935**	
FIESTA (99>2002)	1.8 TDdi	DI-TD	02/2000 ► 03/2000	**816992**		**509706**	**698201**	**715617**			200 CC	**699935**	
FIESTA (99>2002)	1.8 TDdi	DI-TD	04/2000 ► 03/2002	**816992**		**509706**	**698201**	**715617**	**699326**	**699826**	220 CC	**699935**	
FIESTA (2002>)	1.3 i	A9JA, BAJA	03/2002 ►	**817664**		**509934**	**698694**	**698693**	**699335**		200 CC	**699935**	
FIESTA (2002>)	1.4 i 16V	FXJA	03/2002 ►	**817664**		**509934**	**698694**	**698693**	**699326**	**699826**	220 CC	**699935**	
FIESTA (2002>)	1.6 i 16V	FYJA	03/2002 ►	**817664**		**509934**	**698694**	**698693**	**699326**	**699826**	220 CC	**699935**	
FIESTA (2002>)	1.4 TDCi	DURATQ14	03/2002 ►	**817664**		**509934**	**698694**	**698693**		**813638**			
FOCUS (98>2001)	1.4 i 16V	FXDA, FXDC	10/1998 ► 06/1999	**817493**		**509502**	**698487**	**698695**	**699326**	**699826**	220 CC	**699935**	
FOCUS (98>2001)	1.4 i 16V	FXDA, FXDC	07/1999 ► 10/2001	**817493**			**698487**	**698695**	**699326**	**699826**	220 CC	**699935**	
FOCUS (98>2001)	1.6 i 16V	FYDA, FYDC	10/1998 ► 06/1999	**817493**		**509502**	**698487**	**698695**	**699326**	**699826**	220 CC	**699935**	
FOCUS (98>2001)	1.6 i 16V	FYDA, FYDC	07/1999 ► 10/2001	**817493**			**698487**	**698695**	**699326**	**699826**	220 CC	**699935**	
FOCUS (98>2001)	1.8 i 16V	EYDA, EYDC	10/1998 ► 06/1999	**817493**		**509502**	**698487**	**698695**	**699326**	**699826**	220 CC	**699935**	
FOCUS (98>2001)	1.8 i 16V	EYDA, EYDC	07/1999 ► 10/2001	**817493**			**698487**	**698695**	**699326**	**699826**	220 CC	**699935**	
FOCUS (98>2001)	2.0 i 16V	EDDA, EDDC	10/1998 ► 06/1999	**817493**		**509502**	**698487**	**698695**	**699326**	**699826**	220 CC	**699935**	
FOCUS (98>2001)	2.0 i 16V	EDDA, EDDC	07/1999 ► 10/2001	**817493**			**698487**	**698695**	**699326**	**699826**	220 CC	**699935**	
FOCUS (98>2001)	1.8 TDi	C9D, C9DC	10/1998 ► 06/1999	**817493**		**509502**	**698487**	**698695**	**699326**	**699826**	220 CC	**699935**	
FOCUS (98>2001)	1.8 TDi	C9D, C9DC	07/1999 ► 10/2001	**817493**			**698487**	**698695**	**699326**	**699826**	220 CC	**699935**	
FOCUS (98>2001)	1.8 TDCi	LD18TC	05/2001 ► 10/2001	**817493**			**698487**	**698695**	**699326**	**699826**	220 CC	**699935**	

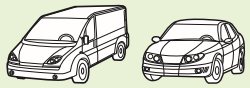

PA | CA | NEW | ES

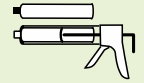

FORD (.../...)

FOCUS (2001>2004)	1.4 i 16V	FXDA, FXDC	11/2001 ► 12/2002	**817493**		**509502**	**698487**	**698695**	**699326**	**699826**	220 CC	**699935**	
FOCUS (2001>2004)	1.4 i 16V	FXDA, FXDC	01/2003 ► 01/2004			**509502**	**698487**	**698695**	**699326**	**699826**	220 CC	**699935**	
FOCUS (2001>2004)	1.6 i 16V	FYDA, FYDC	11/2001 ► 12/2002	**817493**		**509502**	**698487**	**698695**	**699326**	**699826**	220 CC	**699935**	
FOCUS (2001>2004)	1.8 i 16V	EYDA, EYDC	11/2001 ► 12/2002	**817493**		**509502**	**698487**	**698695**	**699326**	**699826**	220 CC	**699935**	
FOCUS (2001>2004)	1.8 i 16V	EYDA, EYDC	01/2003 ► 01/2004			**509502**	**698487**	**698695**	**699326**	**699826**	220 CC	**699935**	
FOCUS (2001>2004)	2.0 i 16V	EDDA, EDDC, ZH20EST	11/2001 ► 12/2002	**817493**		**509502**	**698487**	**698695**	**699326**	**699826**	220 CC	**699935**	
FOCUS (2001>2004)	2.0 i 16V	EDDA, EDDC, ZH20EST	01/2003 ► 01/2004			**509502**	**698487**	**698695**	**699326**	**699826**	220 CC	**699935**	
FOCUS (2001>2004)	2.0 i Turbo 16V	D20RS	09/2002 ► 12/2002	**817493**		**509502**	**698487**	**698695**	**699326**	**699826**	220 CC	**699935**	
FOCUS (2001>2004)	2.0 i Turbo 16V	D20RS	01/2003 ► 01/2004			**509502**	**698487**	**698695**	**699326**	**699826**	220 CC	**699935**	
FOCUS (2001>2004)	1.8 TDCi	LD18TC	11/2001 ► 12/2002	**817493**		**509502**	**698487**	**698695**					
FOCUS (2001>2004)	1.8 TDdi	C9D, C9DC	11/2001 ► 12/2002	**817493**		**509502**	**698487**	**698695**					
GALAXY (95>2000)	2.0 i	NSE	05/1995 ► 08/1996			**508807**	**698247**	**698696**	**699127**	**699627**	200 CC	**699935**	
GALAXY (95>2000)	2.0 i	NSE	09/1996 ► 03/2000	**816948**		**508807**	**698247**	**698696**	**699127**	**699627**	200 CC	**699935**	
GALAXY (95>2000)	1.9 TDi	MF	11/1995 ► 08/1996			**508807**	**698247**	**698696**	**813200**	**813700**	135 CC	**699935**	
GALAXY (95>2000)	1.9 TDi	MF	09/1996 ► 03/2000	**816948**		**508807**	**698247**	**698696**	**813200**	**813700**	135 CC	**699935**	
GALAXY (2000>)	2.0 i	NSE	01/2001 ► 10/2001	**818004**	+	**509593**	**698247 (+)**	**698696 (+)**	**699127**	**699627**	200 CC	**699935**	
GALAXY (2000>)	2.0 i	NSE	11/2001 ► 05/2003		+	**509593**	**698247 (+)**	**698696 (+)**	**699127**	**699627**	200 CC	**699935**	
GALAXY (2000>)	2.3 i 16V	Y5	04/2000 ► 08/2001	**818004**	+	**509593**	**698247 (+)**	**698696 (+)**	**699127**	**699627**	200 CC	**699935**	
GALAXY (2000>)	2.3 i	Y5B	09/2001 ► 10/2001	**818004**	+	**509593**	**698247 (+)**	**698696 (+)**		**813627**			
GALAXY (2000>)	1.9 TDi	AUY1, MF	04/2000 ► 10/2001	**818004**	+	**509593**	**698247 (+)**	**698696 (+)**					
MONDEO (93>2000)	1.6 i	L1F	06/1996 ► 08/1996			**508888**	**698168**		**699209**		200 CC	**699935**	- 145 mm
MONDEO (93>2000)	1.6 i	L1, L1J-90	08/1996 ► 08/2000	**817232**		**508888**	**698168**		**699209**		200 CC	**699935**	- 145 mm
MONDEO (93>2000)	1.6 i	L1, L1J-90	05/1999 ► 08/2000	**817232**		**508888**	**698168**			**699840**	200 CC	**699935**	
MONDEO (93>2000)	1.8 i	RKA	06/1996 ► 08/1996			**508888**	**698168**		**699047**	**699547**	200 CC	**699935**	- 127 mm
MONDEO (93>2000)	1.8 i	RKA	06/1996 ► 08/1996			**508888**	**698168**		**699209**		200 CC	**699935**	- 145 mm
MONDEO (93>2000)	1.8 i	RKJ	08/1996 ► 05/1999	**817232**		**508888**	**698168**		**699047**	**699547**	200 CC	**699935**	- 127 mm
MONDEO (93>2000)	1.8 i	RKJ	05/1999 ► 08/2000	**817232**		**508888**	**698168**			**699840**	200 CC	**699935**	

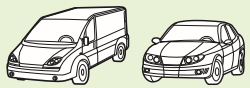			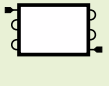	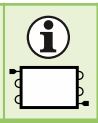		PA	CA		NEW	ES	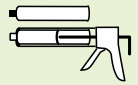		
FORD (.../...)													
MONDEO (93>2000)	2.0 i	NGA	06/1996 ► 08/1996	**817232**		**508888**	**698168**		**699209**		200 CC	**699935**	- 145 mm
MONDEO (93>2000)	2.0 i	NGA	06/1996 ► 08/1996	**817232**		**508888**	**698168**		**699047**	**699547**	200 CC	**699935**	- 127 mm
MONDEO (93>2000)	2.0 i	NGA	08/1996 ► 05/1999	**817232**		**508888**	**698168**		**699047**	**699547**	200 CC	**699935**	- 127 mm
MONDEO (93>2000)	2.0 i	NGA	08/1996 ► 05/1999	**817232**		**508888**	**698168**		**699209**		200 CC	**699935**	- 145 mm
MONDEO (93>2000)	2.0 i	NGA	05/1999 ► 08/2000	**817232**		**508888**	**698168**			**699840**	200 CC	**699935**	
MONDEO (93>2000)	1.8 TD	RFN	08/1996 ► 08/2000	**817232**		**509695**	**698168**		**699048**	**699548**	200 CC	**699935**	
MONDEO (2000>)	1.8 i 16V	CGBA, CGBB, CHBA, CHBB	10/2000 ► 12/2001	**817567**		**509696**	**698779 (-/M+)**	**698745 (A+)**	**699328**	**699828**	200 CC	**699935**	
MONDEO (2000>)	1.8 i 16V	CGBA, CGBB, CHBA, CHBB	12/2001 ► 05/2003	**817657**		**509696**	**698779 (-/M+)**	**698745 (A+)**	**699328**	**699828**	200 CC	**699935**	
MONDEO (2000>)	1.8 SCi 16V	ZH18	06/2003 ►	**817657**			**698779 (-/M+)**	**698745 (A+)**	**699328**	**699828**	200 CC	**699935**	
MONDEO (2000>)	2.0 i 16V	CJBA, CJBB	10/2000 ► 08/2002	**817567**		**509696**	**698779 (-/M+)**	**698745 (A+)**	**699328**	**699828**	200 CC	**699935**	
MONDEO (2000>)	2.0 i 16V	CJBA, CJBB	09/2002 ► 05/2003	**817657**			**698779 (-/M+)**	**698745 (A+)**	**699328**	**699828**	200 CC	**699935**	
MONDEO (2000>)	2.0 Di 16V	D5BA, D6BA	10/2000 ► 09/2001	**817567**		**509696**	**698779 (-/M+)**	**698745 (A+)**	**699327**	**699827**	170 CC	**699935**	
MONDEO (2000>)	2.0 Di 16V	D5BA, D6BA	10/2001 ► 05/2003	**817567**			**698779 (-/M+)**	**698745 (A+)**	**699327**	**699827**	170 CC	**699935**	
MONDEO (2000>)	2.0 TDCi	D5BA, D6BA, PD	10/2000 ► 12/2001	**817567**		**509696**	**698779 (-/M+)**	**698745 (A+)**	**699327**	**699827**	170 CC	**699935**	
	2.0 TDDi 16V												
MONDEO (2000>)	2.0 TDCi	D5BA, D6BA, PD	12/2001 ► 05/2003	**817657**			**698779 (-/M+)**	**698745 (A+)**	**699327**	**699827**	170 CC	**699935**	
	2.0 TDDi 16V												
MERCEDES													
A CLASS (168)	1.4 i	166.940	05/1997 ►	**817659**	+	**509396**	**698475**	**698744**	**699300**		100 CC	**699935**	
A CLASS (168)	1.4 i	166.940	05/1997 ►	**817659**	+	**509411**	**698475**	**698744**	**699300**		100 CC	**699935**	
A CLASS (168)	1.6 i	166.960	05/1997 ►	**817659**	+	**509411**	**698475**	**698744**	**699300**		100 CC	**699935**	
A CLASS (168)	1.6 i	166.960	05/1997 ►	**817659**	+	**509396**	**698475**	**698744**	**699300**		100 CC	**699935**	
A CLASS (168)	1.9 i	166.990	04/1999 ►	**817659**	+	**509411**	**698475**	**698744**	**699300**		100 CC	**699935**	
A CLASS (168)	1.9 i	166.990	04/1999 ►	**817659**	+	**509396**	**698475**	**698744**	**699300**		100 CC	**699935**	
A CLASS (168)	2.1 i	166.995	01/2002 ►	**817659**	+	**509396**	**698475**	**698744**	**699300**		100 CC	**699935**	
A CLASS (168)	2.1 i	166.995	01/2002 ►	**817659**	+	**509411**	**698475**	**698744**	**699300**		100 CC	**699935**	
A CLASS (168)	1.7 CDI	668.940, 668.941, 668.942	05/1998 ►	**817659**	+	**509411**	**698475**	**698744**	**699300**		100 CC	**699935**	

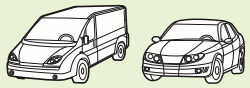

PA | CA | NEW | ES

MERCEDES (.../...)

A CLASS (168)	1.7 CDI	668.940, 668.941, 668.942	05/1998 ►	**817659**	+▯	**509396**	**698475**	**698744**	**699300**		100 CC	**699935**	
C CLASS (202)	1.8 i	111.920	03/1993 ► 02/1996	**817562**			**698169**	**698697**	**699299**		155 CC	**699935**	ch A436436, ch F483848>
C CLASS (202)	1.8 i	111.920	03/1996 ► 03/2000	**817562**		**508909**	**698169**	**698697**	**699299**		155 CC	**699935**	ch A436436, ch F483848>
C CLASS (202)	1.8 i	111.920, 111.921	03/1993 ► 02/1996	**816900**			**698169**	**698697**	**699299**		155 CC	**699935**	>ch A436435, ch F483847
C CLASS (202)	1.8 i	111.920, 111.921	03/1996 ► 02/2001	**816900**		**508909**	**698169**	**698697**	**699299**		155 CC	**699935**	>ch A436435, ch F483847
C CLASS (202)	2.0 i	111.941	01/1994 ► 03/2000	**817562**		**508909**	**698169**	**698697**	**699299**		155 CC	**699935**	ch A436436, ch F483848>
C CLASS (202)	2.0 i	111.941, 111.944, 111.945	01/1994 ► 02/2001	**816900**		**508909**	**698169**	**698697**	**699299**		155 CC	**699935**	>ch A436435, ch F483847
C CLASS (202)	2.2 i	111.961	03/1993 ► 03/2000	**816900**		**508909**	**698169**	**698697**	**699299**		155 CC	**699935**	ch A344661, ch F331441>
C CLASS (202)	2.3 i	111.974	03/1996 ► 02/2001	**816900**		**508909**	**698169**	**698697**	**699299**		155 CC	**699935**	>ch A436435, ch F483847
C CLASS (202)	2.3 i	111.974	08/1995 ► 03/2000	**817562**		**508909**	**698169**	**698697**	**699299**		155 CC	**699935**	ch A436436, ch F483848>
C CLASS (202)	2.3 i	111.975	09/1995 ► 03/2000	**817492**		**508909**	**698169**	**698697**	**699299**		155 CC	**699935**	ch A344661, ch F331441>
C CLASS (202)	2.4 i	112.910	06/1997 ► 06/1998	**816900**		**508909**	**698169**	**698697**	**699299**		155 CC	**699935**	
C CLASS (202)	2.4 i	112.910	06/1998 ► 03/2000	**817562**		**508909**	**698169**	**698697**	**699299**		155 CC	**699935**	
C CLASS (202)	2.8 i	104.941	05/1993 ► 03/2000	**816900**		**508909**	**698169**	**698697**	**699299**		155 CC	**699935**	ch A344661, ch F331441>
C CLASS (202)	2.0 D	601.913, 604.915	03/1993 ► 02/1996	**816900**			**698169**	**698697**	**699299**		155 CC	**699935**	
C CLASS (202)	2.0 D	601.913, 604.915	03/1996 ► 02/2001	**816900**		**508909**	**698169**	**698697**	**699299**		155 CC	**699935**	ch A344661, ch F331441>
C CLASS (202)	2.2 D	604.910	08/1993 ► 02/2001	**816900**		**508909**	**698169**	**698697**	**699299**		155 CC	**699935**	ch A344661, ch F331441>
C CLASS (202)	2.2 CDI	611.960	03/1998 ► 02/2001	**817563**		**508909**	**698169**	**698697**	**699299**		155 CC	**699935**	
C CLASS (202)	2.2 CDI	611.960A	07/1998 ► 03/2000	**817492**		**508909**	**698169**	**698697**	**699299**		155 CC	**699935**	
C CLASS (202)	2.5 D	605.910	05/1993 ► 03/2000	**816900**		**508909**	**698169**	**698697**	**699299**		155 CC	**699935**	ch A344661, ch F331441>
C CLASS (202)	2.5 TD	605.960	09/1995 ► 02/1996	**817492**			**698169**	**698697**	**699299**		155 CC	**699935**	
C CLASS (202)	2.5 TD	605.960	03/1996 ► 02/2001	**817492**		**508909**	**698169**	**698697**	**699299**		155 CC	**699935**	ch A344661, ch F331441>
C CLASS (203)	1.8 Kompressor	271.940/2, 271.946/8	06/2002 ► 12/2003	**817848**	+▯	**509893**	**698701**						RHD
C CLASS (203)	1.8 Kompressor	271.940/2, 271.946/8	06/2002 ► 12/2003	**817848**	+▯	**509893**	**698700**	**698743**					
C CLASS (203)	2.0 i, Kompressor	111.951, 111.955	04/2000 ► 12/2003	**817848**	+▯	**509893**	**698701**		**813157**		160 CC	**699935**	RHD
C CLASS (203)	2.0 i, Kompressor	111.951, 111.955	04/2000 ► 12/2003	**817848**	+▯	**509893**	**698700**	**698743**	**813157**		160 CC	**699935**	
C CLASS (203)	2.3 i Kompressor	111.981	09/2000 ► 12/2003	**817848**	+▯	**509893**	**698701**		**813157**		160 CC	**699935**	RHD

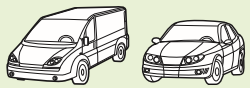

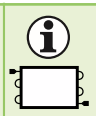

PA

CA

NEW ES

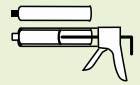

MERCEDES (.../...)

C CLASS (203)	2.3 i Kompressor	111.981	09/2000 ► 12/2003	**817848**	+	**509893**	**698700**	**698743**	**813157**		160 CC	**699935**	
C CLASS (203)	2.1 CDI	611.962	04/2000 ► 12/2003	**817849**	+	**509893**	**698701**		**813157**		160 CC	**699935**	RHD
C CLASS (203)	2.1 CDI	611.962	04/2000 ► 12/2003	**817849**	+	**509893**	**698700**	**698743**	**813157**		160 CC	**699935**	
C CLASS (203)	2.1 CDI 16V	646.962, 646.963	01/2003 ► 12/2003	**817849**	+	**509893**	**698701**						RHD
C CLASS (203)	2.1 CDI 16V	646.962, 646.963	01/2003 ► 12/2003	**817849**	+	**509893**	**698700**	**698743**					
C CLASS (203)	2.7 CDI	612.962	08/2000 ► 07/2005	**817849**	+	**509893**	**698701**		**813157**		160 CC	**699935**	RHD
C CLASS (203)	2.7 CDI	612.962	08/2000 ► 07/2005	**817849**	+	**509893**	**698700**	**698743**	**813157**		160 CC	**699935**	
E CLASS (210)	2.0 i	111.942	04/1995 ► 06/1999	**817562**		**509716**	**698169**	**698697**	**699298**	**699798**	155 CC	**699935**	ch 394036>
E CLASS (210)	2.0 i	111.942	04/1995 ► 06/1999	**817562**		**508911**	**698169**	**698697**					
E CLASS (210)	2.0 i	111.942	04/1995 ► 06/1999	**816900**		**508911**	**698169**	**698697**	**699298**	**699798**	155 CC	**699935**	>ch 394035
E CLASS (210)	2.0 i	111.942	04/1995 ► 06/1999	**816900**		**509716**	**698169**	**698697**	**699298**	**699798**	155 CC	**699935**	>ch 394035
E CLASS (210)	2.0 i	111.942	04/1995 ► 06/1999	**817562**		**509716**	**715531 (A+)**	**698772 (A+)**	**699298**	**699798**	155 CC	**699935**	ch 394036>
E CLASS (210)	2.0 i	111.942	04/1995 ► 06/1999	**817562**		**508911**	**715531 (A+)**	**698772 (A+)**					
E CLASS (210)	2.0 i	111.942	04/1995 ► 06/1999	**816900**		**508911**	**715531 (A+)**	**698772 (A+)**	**699298**	**699798**	155 CC	**699935**	>ch 394035
E CLASS (210)	2.0 i	111.942	04/1995 ► 06/1999	**816900**		**509716**	**715531 (A+)**	**698772 (A+)**	**699298**	**699798**	155 CC	**699935**	>ch 394035
E CLASS (210)	2.3 i	111.970	04/1995 ► 06/1999	**816900**		**509716**	**698169**	**698697**	**699298**	**699798**	155 CC	**699935**	>ch 394035
E CLASS (210)	2.3 i	111.970	04/1995 ► 06/1999	**816900**		**508911**	**698169**	**698697**	**699298**	**699798**	155 CC	**699935**	>ch 394035
E CLASS (210)	2.3 i	111.970	04/1995 ► 06/1999	**817252**		**509716**	**698169**	**698697**	**699298**	**699798**	155 CC	**699935**	ch A160166, ch J023681>
E CLASS (210)	2.3 i	111.970	04/1995 ► 06/1999	**817252**		**508911**	**698169**	**698697**	**699298**	**699798**	155 CC	**699935**	ch 394036>
E CLASS (210)	2.3 i	111.970	04/1995 ► 06/1999	**817562**		**509716**	**698169**	**698697**	**699298**	**699798**	155 CC	**699935**	ch 394036>
E CLASS (210)	2.3 i	111.970	04/1995 ► 06/1999	**817562**		**508911**	**698169**	**698697**	**699298**	**699798**	155 CC	**699935**	ch 394036>
E CLASS (210)	2.3 i	111.970	04/1995 ► 06/1999	**816900**		**509716**	**715531 (A+)**	**698772 (A+)**	**699298**	**699798**	155 CC	**699935**	>ch 394035
E CLASS (210)	2.3 i	111.970	04/1995 ► 06/1999	**816900**		**508911**	**715531 (A+)**	**698772 (A+)**	**699298**	**699798**	155 CC	**699935**	>ch 394035
E CLASS (210)	2.3 i	111.970	04/1995 ► 06/1999	**817252**		**509716**	**715531 (A+)**	**698772 (A+)**	**699298**	**699798**	155 CC	**699935**	ch A160166, ch J023681>
E CLASS (210)	2.3 i	111.970	04/1995 ► 06/1999	**817252**		**508911**	**715531 (A+)**	**698772 (A+)**	**699298**	**699798**	155 CC	**699935**	ch 394036>
E CLASS (210)	2.3 i	111.970	04/1995 ► 06/1999	**817562**		**509716**	**715531 (A+)**	**698772 (A+)**	**699298**	**699798**	155 CC	**699935**	ch 394036>
E CLASS (210)	2.3 i	111.970	04/1995 ► 06/1999	**817562**		**508911**	**715531 (A+)**	**698772 (A+)**	**699298**	**699798**	155 CC	**699935**	ch 394036>

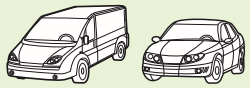

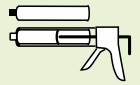

MERCEDES (.../...)

							PA	CA	NEW	ES			
E CLASS (210)	2.4 i	112.911	04/1995 ► 03/2003	**817252**		**508911**	**698169**	**698697**					
E CLASS (210)	2.4 i	112.911	04/1995 ► 03/2003	**817252**		**508911**	**715531 (A+)**	**698772 (A+)**					
E CLASS (210)	2.6 i	112.914	05/2000 ► 03/2003	**817252**		**508911**	**698169**	**698697**					
E CLASS (210)	2.6 i	112.914	05/2000 ► 03/2003	**817252**		**508911**	**715531 (A+)**	**698772 (A+)**					
E CLASS (210)	2.8 i	104.945, 112.921	04/1995 ► 06/1999	**817252**		**509716**	**698169**	**698697**	**699298**	**699798**	155 CC	**699935**	ch A160166, ch J023681>
E CLASS (210)	2.8 i	104.945, 112.921	04/1995 ► 01/1997	**817252**		**508911**	**698169**	**698697**					
E CLASS (210)	2.8 i	104.945, 112.921	04/1995 ► 06/1999	**817252**		**509716**	**715531 (A+)**	**698772 (A+)**	**699298**	**699798**	155 CC	**699935**	ch A160166, ch J023681>
E CLASS (210)	2.8 i	104.945, 112.921	04/1995 ► 01/1997	**817252**		**508911**	**715531 (A+)**	**698772 (A+)**					
E CLASS (210)	2.8 i	104.945, 112.921	02/1997 ► 06/1999	**817252**		**508911**	**698169**	**698697**	**699298**	**699798**	155 CC	**699935**	ch J023681>ch A160165
E CLASS (210)	2.8 i	104.945, 112.921	02/1997 ► 06/1999	**817252**		**508911**	**715531 (A+)**	**698772 (A+)**	**699298**	**699798**	155 CC	**699935**	ch J023681>ch A160165
E CLASS (210)	2.8 i	104.945, 112.921	07/1999 ► 03/2003	**817252**		**508911**	**698169**	**698697**					
E CLASS (210)	2.8 i	104.945, 112.921	07/1999 ► 03/2003	**817252**		**508911**	**715531 (A+)**	**698772 (A+)**					
E CLASS (210)	3.2 i	104.995, 112.941	04/1995 ► 06/1999	**817252**		**509716**	**698169**	**698697**	**699298**	**699798**	155 CC	**699935**	ch A160166, ch J023681>
E CLASS (210)	3.2 i	104.995, 112.941	04/1995 ► 06/1999	**817252**		**508911**	**698169**	**698697**	**699298**	**699798**	155 CC	**699935**	ch J023681>ch A160165
E CLASS (210)	3.2 i	104.995, 112.941	04/1995 ► 06/1999	**817252**		**509716**	**715531 (A+)**	**698772 (A+)**	**699298**	**699798**	155 CC	**699935**	ch A160166, ch J023681>
E CLASS (210)	3.2 i	104.995, 112.941	04/1995 ► 06/1999	**817252**		**508911**	**715531 (A+)**	**698772 (A+)**	**699298**	**699798**	155 CC	**699935**	ch J023681>ch A160165
E CLASS (210)	2.0 D	604.917	04/1995 ► 06/1999	**817252**		**509716**	**698169**	**698697**	**699298**	**699798**	155 CC	**699935**	ch J023681>
E CLASS (210)	2.0 D	604.917	04/1995 ► 06/1999	**817252**		**508911**	**698169**	**698697**	**699298**	**699798**	155 CC	**699935**	ch J023681>ch A160165
E CLASS (210)	2.0 D	604.917	04/1995 ► 06/1999	**817252**		**509716**	**715531 (A+)**	**698772 (A+)**	**699298**	**699798**	155 CC	**699935**	ch J023681>
E CLASS (210)	2.0 D	604.917	04/1995 ► 06/1999	**817252**		**508911**	**715531 (A+)**	**698772 (A+)**	**699298**	**699798**	155 CC	**699935**	ch J023681>ch A160165
E CLASS (210)	2.1 CDI	611.961	03/1996 ► 03/2003	**816949**		**508911**	**698169**	**698697**					
E CLASS (210)	2.1 CDI	611.961	03/1996 ► 03/2003	**816949**		**508911**	**715531 (A+)**	**698772 (A+)**					
E CLASS (210)	2.2 D	604.912	04/1995 ► 06/1999	**817252**		**509716**	**698169**	**698697**	**699298**	**699798**	155 CC	**699935**	ch J023681>
E CLASS (210)	2.2 D	604.912	04/1995 ► 06/1999	**817252**		**508911**	**698169**	**698697**	**699298**	**699798**	155 CC	**699935**	ch J023681>ch A160165
E CLASS (210)	2.2 D	604.912	04/1995 ► 06/1999	**817252**		**509716**	**715531 (A+)**	**698772 (A+)**	**699298**	**699798**	155 CC	**699935**	ch J023681>
E CLASS (210)	2.2 D	604.912	04/1995 ► 06/1999	**817252**		**508911**	**715531 (A+)**	**698772 (A+)**	**699298**	**699798**	155 CC	**699935**	ch J023681>ch A160165
E CLASS (210)	2.5 D	605.912	04/1995 ► 06/1999	**817252**		**509716**	**698169**	**698697**	**699298**	**699798**	155 CC	**699935**	ch A160166, ch J023681>

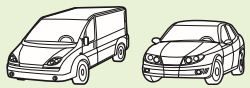			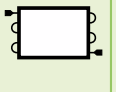	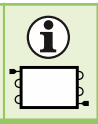		PA	CA		NEW	ES	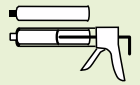		
MERCEDES (.../...)															
E CLASS (210)	2.5 D	605.912	04/1995 ► 06/1999	**817252**		**509716**	**715531 (A+)**	**698772 (A+)**	**699298**	**699798**	155 CC	**699935**	ch A160166, ch J023681>
E CLASS (210)	2.5 D	605.912	03/1996 ► 06/1999	**817252**		**508911**	**698169**	**698697**	**699298**	**699798**	155 CC	**699935**	ch J023681>ch A160165
E CLASS (210)	2.5 D	605.912	03/1996 ► 06/1999	**817252**		**508911**	**715531 (A+)**	**698772 (A+)**	**699298**	**699798**	155 CC	**699935**	ch J023681>ch A160165
E CLASS (210)	2.5 TD	605.962	04/1995 ► 06/1999	**817235**		**508911**	**698169**	**698697**					
E CLASS (210)	2.5 TD	605.962	04/1995 ► 06/1999	**817235**		**508911**	**715531 (A+)**	**698772 (A+)**					
E CLASS (210)	2.7 CDI	612.961	06/1999 ► 03/2003	**817235**		**508911**	**698169**	**698697**					
E CLASS (210)	2.7 CDI	612.961	06/1999 ► 03/2003	**817235**		**508911**	**715531 (A+)**	**698772 (A+)**					
E CLASS (210)	2.9 TD	602.982	04/1995 ► 06/1999	**816949**		**509716**	**698169**	**698697**	**699298**	**699798**	155 CC	**699935**	ch A160166, ch J023681>
E CLASS (210)	2.9 TD	602.982	04/1995 ► 06/1999	**816949**		**509716**	**715531 (A+)**	**698772 (A+)**	**699298**	**699798**	155 CC	**699935**	ch A160166, ch J023681>
E CLASS (210)	2.9 TD	602.982	03/1996 ► 06/1999	**816949**		**508911**	**698169**	**698697**	**699298**	**699798**	155 CC	**699935**	ch J023681>ch A160165
E CLASS (210)	2.9 TD	602.982	03/1996 ► 06/1999	**816949**		**508911**	**715531 (A+)**	**698772 (A+)**	**699298**	**699798**	155 CC	**699935**	ch J023681>ch A160165
E CLASS (210)	3.0 D	606.912	04/1995 ► 06/1999	**817252**		**508911**	**698169**	**698697**	**699298**	**699798**	155 CC	**699935**	ch J023681>
E CLASS (210)	3.0 D	606.912	04/1995 ► 06/1999	**817252**		**509716**	**698169**	**698697**	**699298**	**699798**	155 CC	**699935**	ch J023681>
E CLASS (210)	3.0 D	606.912	04/1995 ► 06/1999	**817252**		**508911**	**715531 (A+)**	**698772 (A+)**	**699298**	**699798**	155 CC	**699935**	ch J023681>
E CLASS (210)	3.0 D	606.912	04/1995 ► 06/1999	**817252**		**509716**	**715531 (A+)**	**698772 (A+)**	**699298**	**699798**	155 CC	**699935**	ch J023681>
E CLASS (210)	3.0 TD	606.962	04/1995 ► 06/1999	**817235**		**509716**	**698169**	**698697**	**699298**	**699798**	155 CC	**699935**	ch A160166, ch J023681>
E CLASS (210)	3.0 TD	606.962	04/1995 ► 06/1999	**817235**		**509716**	**715531 (A+)**	**698772 (A+)**	**699298**	**699798**	155 CC	**699935**	ch A160166, ch J023681>
E CLASS (210)	3.0 TD	606.962	03/1996 ► 06/1999	**817235**		**508911**	**698169**	**698697**	**699298**	**699798**	155 CC	**699935**	ch J023681>ch A160165
E CLASS (210)	3.0 TD	606.962	03/1996 ► 06/1999	**817235**		**508911**	**715531 (A+)**	**698772 (A+)**	**699298**	**699798**	155 CC	**699935**	ch J023681>ch A160165
E CLASS (210)	3.2 CDI	613.961	06/1999 ► 03/2003	**817235**		**508911**	**698169**	**698697**					
E CLASS (210)	3.2 CDI	613.961	06/1999 ► 03/2003	**817235**		**508911**	**715531 (A+)**	**698772 (A+)**					
OPEL															
ASTRA G (98>)	1.2 i 16V	X12XE	02/1998 ► 12/2001	**817505**	+▯		**698663**	**698708**		**699749**			>ch 12999999
ASTRA G (98>)	1.2 i 16V	X12XE	02/1998 ► 12/2001	**817505**	+▯		**698662**	**698709**		**699749**			>ch 12999999
ASTRA G (98>)	1.2 i 16V	X12XE	01/2002 ► 02/2004	**818047**	+▯		**698663**	**698708**					>ch W6116025
ASTRA G (98>)	1.2 i 16V	Z12XE	01/2002 ►	**818047**	+▯	**509691**	**698663**	**698708**		**699898**			ch 22000001>
ASTRA G (98>)	1.2 i 16V	X12XE	01/2002 ► 02/2004	**818047**	+▯		**698662**	**698709**					>ch W6116025

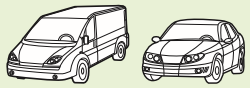

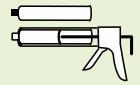

OPEL (.../...)

							PA	CA	NEW	ES			
ASTRA G (98>)	1.2 i 16V	Z12XE	01/2002 ►	**818047**	+	**509691**	**698662**	**698709**		**699898**			ch 22000001>
ASTRA G (98>)	1.4 i 16V	Z14XE	02/1998 ► 12/2001	**817505**	+		**698663**	**698708**	**699270**	**699770**	150 CC	**699937**	>ch 12999999
ASTRA G (98>)	1.4 i 16V	X14XE	02/1998 ► 12/2001	**817505**	+		**698663**	**698708**	**699250**	**699750**	150 CC	**699937**	>ch 12999999
ASTRA G (98>)	1.4 i 16V	Z14XE	02/1998 ► 12/2001	**817505**	+		**698662**	**698709**	**699270**	**699770**	150 CC	**699937**	>ch 12999999
ASTRA G (98>)	1.4 i 16V	X14XE	02/1998 ► 12/2001	**817505**	+		**698662**	**698709**	**699250**	**699750**	150 CC	**699937**	>ch 12999999
ASTRA G (98>)	1.4 i 16V	Z14XE	01/2002 ►		+	**509691**	**698663**	**698708**	**699270**	**699770**	150 CC	**699937**	ch 22000001>
ASTRA G (98>)	1.4 i 16V	X14XE	01/2002 ►	**818047**	+		**698663**	**698708**	**699250**	**699750**	150 CC	**699937**	>ch 12999999
ASTRA G (98>)	1.4 i 16V	Z14XE	01/2002 ►		+	**509691**	**698662**	**698709**	**699270**	**699770**	150 CC	**699937**	ch 22000001>
ASTRA G (98>)	1.4 i 16V	X14XE	01/2002 ►	**818047**	+		**698662**	**698709**	**699250**	**699750**	150 CC	**699937**	>ch 12999999
ASTRA G (98>)	1.6 i	X16SZR	02/1998 ► 09/2000	**817505**	+		**698663**	**698708**	**699250**	**699750**	150 CC	**699937**	>ch 12999999
ASTRA G (98>)	1.6 i	X16SZR	02/1998 ► 09/2000	**817505**	+		**698662**	**698709**	**699250**	**699750**	150 CC	**699937**	>ch 12999999
ASTRA G (98>)	1.6 i	Z16SE/E4	09/2000 ► 12/2001	**817505**	+		**698663**	**698708**	**699270**	**699770**	150 CC	**699937**	>ch 22271936
ASTRA G (98>)	1.6 i	Z16SE/E4	09/2000 ► 12/2001	**817505**	+		**698662**	**698709**	**699270**	**699770**	150 CC	**699937**	>ch 22271936
ASTRA G (98>)	1.6 i	X16SZR	10/2000 ► 12/2001	**817505**	+		**698663**	**698708**					>ch 12999999
ASTRA G (98>)	1.6 i	X16SZR	10/2000 ► 12/2001	**817505**	+		**698662**	**698709**					>ch 12999999
ASTRA G (98>)	1.6 i	Z16SE/E4	01/2002 ►		+	**509691**	**698663**	**698708**	**699270**	**699770**	150 CC	**699937**	>ch 22271936
ASTRA G (98>)	1.6 i	Z16SE/E4	01/2002 ►	**818047**	+		**698662**	**698709**	**699270**	**699770**	150 CC	**699937**	>ch 22271936
ASTRA G (98>)	1.6 i	C16SEL	12/2002 ►		+	**509691**	**698663**	**698708**	**699250**	**699750**	150 CC	**699937**	
ASTRA G (98>)	1.6 i	C16SEL	12/2002 ►	**818047**	+		**698662**	**698709**	**699250**	**699750**	150 CC	**699937**	
ASTRA G (98>)	1.6 i 16V	X16XEL	02/1998 ► 12/2001	**817505**	+		**698663**	**698708**	**699250**	**699750**	150 CC	**699937**	>ch 12999999
ASTRA G (98>)	1.6 i 16V	Z16XE	02/1998 ► 12/2001	**817505**	+		**698663**	**698708**	**699270**	**699770**	150 CC	**699937**	>ch 12999999
ASTRA G (98>)	1.6 i 16V	X16XEL	02/1998 ► 12/2001	**817505**	+		**698662**	**698709**	**699250**	**699750**	150 CC	**699937**	>ch 12999999
ASTRA G (98>)	1.6 i 16V	Z16XE	02/1998 ► 12/2001	**817505**	+		**698662**	**698709**	**699270**	**699770**	150 CC	**699937**	>ch 12999999
ASTRA G (98>)	1.6 i 16V	Z16XE	01/2002 ►	**818047**	+	**509691**	**698663**	**698708**	**699270**	**699770**	150 CC	**699937**	ch 22000001>
ASTRA G (98>)	1.6 i 16V	Z16XE	01/2002 ►	**818047**	+	**509691**	**698662**	**698709**	**699270**	**699770**	150 CC	**699937**	ch 22000001>
ASTRA G (98>)	1.8 i 16V	X18XE1	02/1998 ► 12/2001	**817505**	+		**698663**	**698708**	**699250**	**699750**	150 CC	**699937**	>ch 12999999
ASTRA G (98>)	1.8 i 16V	X18XE1	02/1998 ► 12/2001	**817505**	+		**698662**	**698709**	**699250**	**699750**	150 CC	**699937**	>ch 12999999

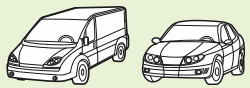

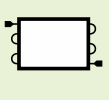

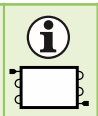

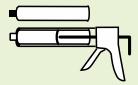

OPEL (.../...)

								PA	CA	NEW	ES			
ASTRA G (98>)	1.8 i 16V	Z18XE	09/2000 ► 12/2001	**817505**	+			**698663**	**698708**	**699270**	**699770**	150 CC	**699937**	>ch 12999999
ASTRA G (98>)	1.8 i 16V	Z18XE	09/2000 ► 12/2001	**817505**	+			**698662**	**698709**	**699270**	**699770**	150 CC	**699937**	>ch 12999999
ASTRA G (98>)	1.8 i 16V	X18XE1	01/2002 ►	**818047**	+			**698663**	**698708**	**699250**	**699750**	150 CC	**699937**	>ch 12999999
ASTRA G (98>)	1.8 i 16V	Z18XE	01/2002 ►	**818047**	+			**698663**	**698708**	**699270**	**699770**	150 CC	**699937**	>ch 42009015
ASTRA G (98>)	1.8 i 16V	X18XE1	01/2002 ►	**818047**	+			**698662**	**698709**	**699250**	**699750**	150 CC	**699937**	>ch 12999999
ASTRA G (98>)	1.8 i 16V	Z18XE	01/2002 ►	**818047**	+			**698662**	**698709**	**699270**	**699770**	150 CC	**699937**	>ch 42009015
ASTRA G (98>)	2.0 i 16V	X20XEV	02/1998 ► 12/1999	**817505**	+			**698663**	**698708**	**699250**	**699750**	150 CC	**699937**	>ch W6116025
ASTRA G (98>)	2.0 i 16V	X20XEV	02/1998 ► 12/1999	**817505**	+			**698662**	**698709**	**699250**	**699750**	150 CC	**699937**	>ch W6116025
ASTRA G (98>)	2.0 i Turbo 16V	Z20LER	01/2002 ►	**817505**	+			**698663**	**698708**	**699270**	**699770**	150 CC	**699937**	ch 22007680>
ASTRA G (98>)	2.0 i Turbo 16V	Z20LER	01/2002 ►	**817505**	+			**698662**	**698709**	**699270**	**699770**	150 CC	**699937**	ch 22007680>
ASTRA G (98>)	2.2 i 16V	Z22SE	10/1999 ► 12/2001	**817505**	+			**698663**	**698708**	**699307**	**699807**	120 CC	**699935**	>ch 12999999
ASTRA G (98>)	2.2 i 16V	Z22SE	10/1999 ► 12/2001	**817505**	+			**698662**	**698709**	**699307**	**699807**	120 CC	**699935**	>ch 12999999
ASTRA G (98>)	2.2 i 16V	Z22SE	01/2002 ►	**818047**	+		**509691**	**698663**	**698708**	**699307**	**699807**	120 CC	**699935**	ch 22000001>
ASTRA G (98>)	2.2 i 16V	Z22SE	01/2002 ►	**818047**	+		**509691**	**698662**	**698709**	**699307**	**699807**	120 CC	**699935**	ch 22000001>
ASTRA G (98>)	1.7 TD	X17DTL	02/1998 ► 08/2000	**817506**			**509400**	**698663**	**698708**	**699251**	**699751**	150 CC	**699937**	
ASTRA G (98>)	1.7 TD	X17DTL	02/1998 ► 08/2000	**817506**			**509400**	**698662**	**698709**	**699251**	**699751**	150 CC	**699937**	
ASTRA G (98>)	1.7 TD	X17DTL	09/2000 ► 01/2002	**817506**			**509400**	**698663**	**698708**					
ASTRA G (98>)	1.7 TD	X17DTL	09/2000 ► 01/2002	**817506**			**509400**	**698662**	**698709**					
ASTRA G (98>)	1.7 DTI 16V	Y17DT	02/2000 ► 02/2004	**817506**			**509400**	**698663**	**698708**	**699405**	**699905**			
ASTRA G (98>)	1.7 DTI 16V	Y17DT	02/2000 ► 02/2004	**817506**			**509400**	**698662**	**698709**	**699405**	**699905**			
ASTRA G (98>)	2.0 Di 16V	Y20DTL	01/2002 ► 02/2004	**818047**	+		**509691**	**698663**	**698708**	**699308**	**699808**	150 CC	**699935**	ch 22000001>
ASTRA G (98>)	2.0 Di 16V	Y20DTL	01/2002 ► 02/2004	**818047**	+		**509691**	**698662**	**698709**	**699308**	**699808**	150 CC	**699935**	ch 22000001>
ASTRA G (98>)	2.0 Di 16V, DTi 16V	X20DTL	02/1998 ► 12/2001	**817505**	+			**698663**	**698708**		**699899**			>ch W6116025
ASTRA G (98>)	2.0 Di 16V, DTi 16V	X20DTL	02/1998 ► 12/2001	**817506**			**509400**	**698663**	**698708**		**699899**			
ASTRA G (98>)	2.0 Di 16V, DTi 16V	X20DTL	02/1998 ► 12/2001	**817505**	+			**698662**	**698709**		**699899**			>ch W6116025
ASTRA G (98>)	2.0 Di 16V, DTi 16V	X20DTL	02/1998 ► 12/2001	**817506**			**509400**	**698662**	**698709**		**699899**			
ASTRA G (98>)	2.0 DTi 16V	Y20DTH	08/1999 ► 02/2004	**817506**			**509400**	**698663**	**698708**	**699308**	**699808**	150 CC	**699935**	

OPEL (.../...)

							PA	CA	NEW	ES			
ASTRA G (98>)	2.0 DTi 16V	Y20DTH	08/1999 ► 02/2004	**817506**		**509400**	**698662**	**698709**	**699308**	**699808**	150 CC	**699935**	
ASTRA G (98>)	2.0 DTi 16V	X20DTL	01/2002 ► 02/2004	**817506**			**698663**	**698708**					
ASTRA G (98>)	2.0 DTi 16V	X20DTL	01/2002 ► 02/2004	**817506**			**698662**	**698709**					
ASTRA G (98>)	2.2 DTI 16V	Y22DTR	10/2002 ► 02/2004	**817506**		**509400**	**698663**	**698708**	**699308**	**699808**	150 CC	**699935**	
ASTRA G (98>)	2.2 DTI 16V	Y22DTR	10/2002 ► 02/2004	**817506**		**509400**	**698662**	**698709**	**699308**	**699808**	150 CC	**699935**	
CORSA B (93>2000)	1.0 i 12V	X10XE	03/1997 ► 08/2000	**816902**		**508739**	**698166 (+)**	**715632 (+)**		**699748**			ch R4147617>
CORSA B (93>2000)	1.2 i, 1.2 i 16V	C12NZ, X12SZ, X12XE	03/1993 ► 08/2000	**816902**		**508739**	**698166 (+)**	**715632 (+)**		**699748**			ch R4147617>ch R4147616
CORSA B (93>2000)	1.4 i	C14NZ, C14SE, X14SZ	03/1993 ► 08/2000	**816902**		**508739**	**698166 (+)**	**715632 (+)**	**699072**	**699572**	295 CC	**699937**	ch R4147617>ch R4147616
CORSA B (93>2000)	1.4 i 16V	X14XE	07/1995 ► 08/2000	**816902**		**508739**	**698166 (+)**	**715632 (+)**	**699072**	**699572**	295 CC	**699937**	ch R4147617>
CORSA B (93>2000)	1.6 i 16V	C16XE	03/1993 ► 08/2000	**816902**		**508739**	**698166 (+)**	**715632 (+)**	**699072**	**699572**	295 CC	**699937**	ch R4147617>ch R4147616
CORSA B (93>2000)	1.5 D, 1.5 TD	15D, 15TD	03/1993 ► 08/2000	**816902**		**508739**	**698166 (+)**	**715632 (+)**					ch R4147617>ch R4147616
CORSA B (93>2000)	1.7 D	17DA, X17D	03/1993 ► 08/2000	**816902**		**508739**	**698166 (+)**	**715632 (+)**					ch R4147617>ch R4147616
CORSA C (2000>2003)	1.0 i 12V	Z10XE	09/2000 ► 08/2003	**817609**	+▯	**509591**	**698711**	**698710**		**699893**			
CORSA C (2000>2003)	1.2 i 16V	Z12XE	09/2000 ► 08/2003	**817609**	+▯	**509591**	**698711**	**698710**		**699898**			
CORSA C (2000>2003)	1.4 i 16V	Z14XE	09/2000 ► 08/2003	**817609**	+▯	**509591**	**698711**	**698710**	**699270**	**699770**	150 CC	**699937**	
CORSA C (2000>2003)	1.8 i 16V	Z18XE	09/2000 ► 08/2003	**817609**	+▯	**509591**	**698711**	**698710**	**699270**	**699770**	150 CC	**699937**	
CORSA C (2000>2003)	1.7 DI 16V	Y17DTL	09/2000 ► 08/2003	**817610**	+▯	**509591**	**698711**	**698710**	**699306**	**699806**	135 CC	**699935**	
CORSA C (2000>2003)	1.7 DTI 16V	Y17DT	09/2000 ► 08/2003	**818118**	+▯	**509591**	**698711**	**698710**	**699306**	**699806**	135 CC	**699935**	ch 34001718>ch 34001717
CORSA C (2000>2003)	1.7 DTI 16V	Y17DT	09/2000 ► 08/2003	**817610**	+▯	**509591**	**698711**	**698710**	**699306**	**699806**	135 CC	**699935**	
CORSA C (2003>)	1.8 16V	Z18XE	09/2003 ► 12/2003	**817609**	+▯	**509929**	**698711**	**698710**	**699270**	**699770**	150 CC	**699937**	
CORSA C (2003>)	1.0 i 12V	Z10XEP	01/2004 ►	**814066**	+▯	**509929**	**698711**	**698710**		**699893**			
CORSA C (2003>)	1.2 i 16V	Z12XE	09/2004 ►	**814066**	+▯	**509929**	**698711**	**698710**		**699898**			
CORSA C (2003>)	1.4 i 16V	Z14XEP	01/2004 ►	**814066**	+▯	**509929**	**698711**	**698710**		**699912**			
CORSA C (2003>)	1.8 16V	Z18XE	01/2004 ►	**817843**	+▯	**509929**	**698711**	**698710**	**699270**	**699770**	150 CC	**699937**	
CORSA C (2003>)	1.7 CDTI 16V	Z17DTH	09/2003 ►	**817844**	+▯	**509929**	**698711**	**698710**	**699306**	**699806**	135 CC	**699935**	
VECTRA B (95>99)	1.6 i, 1.6 i 16V	16LZ2, X16SZR, X16XEL	10/1995 ► 01/1999		+▯	**509564**	**698202**		**699102**	**699602**	295 CC	**699937**	
VECTRA B (95>99)	1.8 i 16V	X18XE	10/1995 ► 01/1999		+▯	**509564**	**698202**		**699102**	**699602**	295 CC	**699937**	>ch W1999999

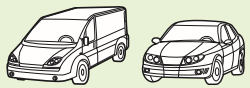

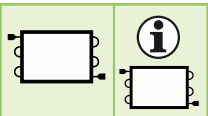

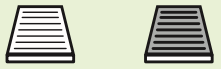

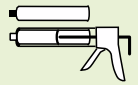

OPEL (.../...)

							PA	CA	NEW	ES			
VECTRA B (95>99)	2.0 i, 2.0 i 16V	20NEJ, X20XEV	10/1995 ► 01/1999		+	**509564**	**698202**		**699102**	**699602**	295 CC	**699937**	
VECTRA B (95>99)	1.7 TD	X17DT	10/1995 ► 01/1999		+	**509564**	**698202**			**699902**			
VECTRA B (95>99)	2.0 Di 16V	X20DTL	10/1996 ► 01/1999		+	**509564**	**698202**		**699102**	**699602**	295 CC	**699937**	
VECTRA B (95>99)	2.0 TDi 16V	X20DTH	09/1997 ► 12/1998	**817670**		**509563**	**698202**		**699102**	**699602**	295 CC	**699937**	
VECTRA B (99>2002)	1.6 i 16V	Z16XE	02/1999 ► 06/2003		+	**509564**	**698202**		**699102**	**699602**	295 CC	**699937**	>ch W1999999
VECTRA B (99>2002)	1.8 i 16V	Z18XE	02/1999 ► 06/2003		+	**509564**	**698202**		**699102**	**699602**	295 CC	**699937**	>ch W1999999
VECTRA B (99>2002)	2.2 i 16V	Z22SE	02/1999 ► 06/2003		+	**509564**	**698202**		**699307**	**699807**	120 CC	**699935**	
VECTRA B (99>2002)	2.0 DTi 16V	Y20DTH	02/1999 ► 06/2003	**817670**		**509563**	**698202**		**699102**	**699602**	295 CC	**699937**	
VECTRA B (99>2002)	2.2 DTI 16V	Y22DTR	09/2000 ► 06/2003	**817670**		**509563**	**698202**		**699102**	**699602**	295 CC	**699937**	
VECTRA C (2002>2005)	1.6 i 16V	Z16XE	04/2002 ► 03/2005	**817647**	+	**509692**	**698711**	**698710**	**699317**	**699817**	120 CC	**699935**	
VECTRA C (2002>2005)	1.8 i 16V	Z18XE, Z18XEL	04/2002 ► 03/2005	**817647**	+	**509692**	**698711**	**698710**	**699317**	**699817**	120 CC	**699935**	
VECTRA C (2002>2005)	2.0 i Turbo 16V	Z20NET	07/2003 ► 03/2005	**817647**	+		**698711**	**698710**	**699318**	**699818**	120 CC	**699935**	
VECTRA C (2002>2005)	2.2 i 16V	Z22SE	04/2002 ► 03/2005	**817647**	+	**509692**	**698711**	**698710**	**699318**	**699818**	120 CC	**699935**	
VECTRA C (2002>2005)	2.2 DIG 16V	Z22YH	07/2003 ► 03/2005	**817647**	+		**698711**	**698710**	**699318**	**699818**	120 CC	**699935**	
VECTRA C (2002>2005)	2.0 DTi 16V	Y20DTH	04/2002 ► 03/2005	**817648**	+	**509693**	**698711**	**698710**	**699355**	**699855**	120 CC	**699935**	
VECTRA C (2002>2005)	2.2 DTI 16V	Y22DTR	04/2002 ► 03/2005	**817648**	+	**509693**	**698711**	**698710**	**699355**	**699855**	120 CC	**699935**	
ZAFIRA (98>2003)	1.6 i 16V	X16XEL, Z16XE, Z16XE/D3	01/1999 ► 01/2000	**817505**	+		**698663**	**698708**	**699301**		120 CC	**699935**	>ch Y2147297
ZAFIRA (98>2003)	1.6 i 16V	X16XEL, Z16XE, Z16XE/D3	02/2000 ► 12/2001	**817505**	+		**698663**	**698708**		**699769**			
ZAFIRA (98>2003)	1.6 i 16V	X16XEL, Z16XE, Z16XE/D3	01/2002 ► 06/2003	**818047**	+	**509691**	**698663**	**698708**		**699897**			ch 22000001>
ZAFIRA (98>2003)	1.8 i 16V	X18XE1, Z18XE	01/1999 ► 01/2000	**817505**	+		**698663**	**698708**	**699301**		120 CC	**699935**	>ch Y2147297
ZAFIRA (98>2003)	1.8 i 16V	X18XE1, Z18XE	01/1999 ► 01/2000	**817505**	+	**509691**	**698663**	**698708**	**699301**		120 CC	**699935**	>ch Y2147297
ZAFIRA (98>2003)	1.8 i 16V	X18XE1, Z18XE	02/2000 ► 12/2001	**817505**	+		**698663**	**698708**		**699769**			>ch 12999999
ZAFIRA (98>2003)	1.8 i 16V	X18XE1, Z18XE	02/2000 ► 12/2001	**817505**	+	**509691**	**698663**	**698708**		**699769**			>ch 12999999
ZAFIRA (98>2003)	1.8 i 16V	X18XE1, Z18XE	01/2002 ► 06/2002	**817505**	+		**698663**	**698708**		**699897**			>ch 12999999
ZAFIRA (98>2003)	1.8 i 16V	X18XE1, Z18XE	01/2002 ► 06/2002	**817505**	+	**509691**	**698663**	**698708**		**699897**			>ch 12999999
ZAFIRA (98>2003)	1.8 i 16V	Z18XE	01/2002 ► 06/2003	**818047**	+	**509691**	**698663**	**698708**		**699897**			ch 22000001>
ZAFIRA (98>2003)	2.2 i 16V	Z22SE	01/1999 ► 12/2001	**817505**	+		**698663**	**698708**	**699307**	**699807**	120 CC	**699935**	>ch 12999999

								PA	CA	NEW	ES			
OPEL (.../...)														
ZAFIRA (98>2003)	2.2 i 16V	Z22SE	01/2002 ► 06/2003	**818047**	+	**509691**		**698663**	**698708**	**699307**	**699807**	120 CC	**699935**	ch 22000001>
ZAFIRA (98>2003)	2.0 DT 16V	X20DTL	01/1999 ► 12/2000	**817505**	+			**698663**	**698708**					>ch 12999999
ZAFIRA (98>2003)	2.0 DT 16V	X20DTL	01/2001 ► 12/2001	**817505**	+			**698663**	**698708**	**699324**	**699824**	120 CC	**699935**	ch 12082350>
ZAFIRA (98>2003)	2.0 DT 16V	X20DTL	01/2002 ► 06/2003	**818047**	+	**509691**		**698663**	**698708**	**699324**	**699824**	120 CC	**699935**	ch 12082350>
ZAFIRA (98>2003)	2.0 DTI 16V	Y20DTL	01/1999 ► 12/2000	**817505**	+			**698663**	**698708**	**699324**	**699824**	120 CC	**699935**	>ch 12999999
ZAFIRA (98>2003)	2.0 DTI 16V	Y20DTL	01/2001 ► 12/2001	**817505**	+			**698663**	**698708**	**699324**	**699824**	120 CC	**699935**	ch 12082350>
ZAFIRA (98>2003)	2.0 DTI 16V	Y20DTL	01/2002 ► 06/2003	**818047**	+	**509691**		**698663**	**698708**	**699324**	**699824**	120 CC	**699935**	ch 12082350>
ZAFIRA (98>2003)	2.0 DTi 16V	Y20DTH	01/1999 ► 12/2000	**817506**		**509400**		**698663**	**698708**					ch 2H009142>ch 22027043
ZAFIRA (98>2003)	2.0 DTi 16V	Y20DTH	01/2001 ► 01/2002	**817506**		**509400**		**698663**	**698708**					ch 2H009142>ch 22027043
ZAFIRA (98>2003)	2.0 DTi 16V	Y20DTH	01/2002 ► 06/2003	**817506**	+	**509691**		**698663**	**698708**					ch 2H009142>ch 22027043
ZAFIRA (2003>2005)	1.6 i 16V	Z16XE, Z16XE/D4	07/2003 ► 06/2005	**818047**	+	**509691**		**698663**	**698708**		**699897**			
ZAFIRA (2003>2005)	1.8 i 16V	Z18XE	07/2003 ► 06/2005	**818047**	+	**509691**		**698663**	**698708**		**699897**			
ZAFIRA (2003>2005)	2.0 i Turbo 16V	Z20LET	07/2003 ► 06/2005			**509400**		**698663**	**698708**					
ZAFIRA (2003>2005)	2.0 DTI 16V	Y20DTL	07/2003 ► 06/2005	**818047**	+	**509691**		**698663**	**698708**	**699324**	**699824**	120 CC	**699935**	
ZAFIRA (2003>2005)	2.2 DTI 16V	Y22DTR	07/2003 ► 06/2005	**817506**		**509400**		**698663**	**698708**	**699324**	**699824**	120 CC	**699935**	
PEUGEOT														
206	1.1 i	TU1JP	09/1998 ► 09/2002	**817283**		**509403**		**698488**	**698749 (+)**	**699190**	**699690**	135 CC	**699935**	>ch 9456
206	1.1 i	TU1JP	09/1998 ► 09/2002	**817283**		**509403**		**698488**	**698749 (+)**	**813189**	**813689**	135 CC	**699935**	>ch 8532, ch 9491
206	1.1 i	TU1JP	10/2002 ► 08/2003	**817283**		**509403**		**698488**	**698749 (+)**	**813189**	**813689**	135 CC	**699935**	>ch 9792
206	1.1 i	TU1JP	09/2003 ►	**818000**		**509403**		**698488**	**698749 (+)**	**813189**	**813689**	135 CC	**699935**	ch 9793>
206	1.4 i	TU3JP	09/1998 ► 08/2003	**817283**		**509403**		**698488**	**698749 (+)**	**813189**	**813689**	135 CC	**699935**	>ch 9792
206	1.4 i	TU3JP	09/1998 ► 08/2003	**817283**		**509403**		**698488**	**698749 (+)**	**699190**	**699690**	135 CC	**699935**	>ch 9456
206	1.4 i	TU3JP	09/2003 ►	**818000**		**509403**		**698488**	**698749 (+)**	**813189**	**813689**	135 CC	**699935**	ch 9793>
206	1.4 i 16V	ET3J4	10/2003 ►	**818001**				**698488**	**698749 (+)**					
206	1.6 i	TU5JP	09/1998 ► 08/2003	**817283**		**509403**		**698488**	**698749 (+)**	**699190**	**699690**	135 CC	**699935**	>ch 9456
206	1.6 i	TU5JP	09/1998 ► 08/2003	**817283**		**509403**		**698488**	**698749 (+)**	**813189**	**813689**	135 CC	**699935**	>ch 9792
206	1.6 i	TU5JP	09/2003 ►	**818000**		**509403**		**698488**	**698749 (+)**	**813189**	**813689**	135 CC	**699935**	ch 9793>

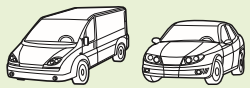

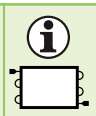

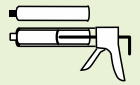

PEUGEOT (.../...)

							PA	CA	NEW	ES			
206	1.6 i 16V	TU5JP4	09/2000 ► 12/2003	**817283**		**509403**	**698488**	**698749 (+)**	**699190**	**699690**	135 CC	**699935**	>ch 9456
206	1.6 i 16V	TU5JP4	09/2000 ► 12/2003	**817283**		**509403**	**698488**	**698749 (+)**	**813189**	**813689**	135 CC	**699935**	>ch 9792
206	1.6 i 16V	TU5JP4	09/2003 ►	**818000**		**509403**	**698488**	**698749 (+)**	**813189**	**813689**	135 CC	**699935**	ch 9793>
206	1.6 i 16V	TU5JP4	09/2003 ►	**818001**		**509403**	**698488**	**698749 (+)**	**813189**	**813689**	135 CC	**699935**	
206	2.0 i 16V	EW10J4	04/1999 ► 09/2000	**817283**		**509403**	**698488**	**698749 (+)**	**699199**	**699699**	135 CC	**699935**	>ch 8700
206	2.0 i 16V	EW10J4	04/1999 ► 09/2000	**817283**		**509403**	**698488**	**698749 (+)**	**699216**	**699716**	135 CC	**699935**	ch 8701>
206	2.0 i 16V	EW10J4	10/2000 ► 08/2003	**817283**		**509403**	**698488**	**698749 (+)**	**699199**	**699699**	135 CC	**699935**	>ch 9792
206	2.0 i 16V	EW10J4	10/2000 ► 09/2002	**817283**		**509403**	**698488**	**698749 (+)**	**699216**	**699716**	135 CC	**699935**	>ch 9792
206	2.0 i 16V	EW10J4	10/2002 ► 08/2003	**817283**		**509403**	**698488**	**698749 (+)**	**699216**	**699716**	135 CC	**699935**	>ch 9456
206	2.0 i 16V	EW10J4	09/2003 ►	**818000**		**509403**	**698488**	**698749 (+)**	**813189**	**813689**	135 CC	**699935**	ch 9457>
206	1.4 HDi	DV4TD	03/2002 ► 08/2003	**817283**		**509403**	**698488**	**698749 (+)**	**813189**	**813689**	135 CC	**699935**	
206	1.4 HDi	DV4TD	09/2003 ►	**818001**		**509403**	**698488**	**698749 (+)**	**813189**	**813689**	135 CC	**699935**	
206	1.9 D	DW8, DW8B	09/1998 ► 06/2002	**817283**		**509403**	**698488**	**698749 (+)**	**699236**	**699736**	135 CC	**699935**	>ch 9337
206	1.9 D	DW8, DW8B	07/2002 ► 08/2003	**817283**		**509403**	**698488**	**698749 (+)**	**699236**	**699736**	135 CC	**699935**	>ch 9792
206	1.9 D	DW8, DW8B	07/2002 ► 08/2003	**817283**		**509403**	**698488**	**698749 (+)**	**699358**	**699858**	135 CC	**699935**	ch 9338>
206	1.9 D	DW8B	09/2003 ►	**818001**		**509403**	**698488**	**698749 (+)**	**699358**	**699858**	135 CC	**699935**	ch 9338>
206	2.0 HDi	DW10TD	09/1999 ► 06/2002	**817283**		**509403**	**698488**	**698749 (+)**	**699236**	**699736**	135 CC	**699935**	>ch 9792
206	2.0 HDi	DW10TD	09/1999 ► 06/2002	**817283**		**509403**	**698488**	**698749 (+)**	**699236**	**699736**	135 CC	**699935**	>ch 9337
206	2.0 HDi	DW10TD	07/2002 ► 08/2003	**817283**		**509403**	**698488**	**698749 (+)**	**699358**	**699858**	135 CC	**699935**	ch 9338>
206	2.0 HDi	DW10TD	09/2003 ►	**818001**		**509403**	**698488**	**698749 (+)**	**699358**	**699858**	135 CC	**699935**	
207	1.4e, 1.4e 16V	ET3J4, TU3A	03/2006 ►	**814095**	+		**715556 (-/M+)**	**715557 (A+)**			135 CC	**699935**	
207	1.4 VTi, 1.4 VTi 16V	EP3	07/2007 ► 06/2008	**814095**	+		**715556 (-/M+)**	**715557 (A+)**					
207	1.6e 16V	TU5JP4	03/2006 ►	**814095**	+		**715556 (-/M+)**	**715557 (A+)**			135 CC	**699935**	
207	1.6e 16V	TU5JP4	07/2008 ►	**818015**	+		**715556 (-/M+)**	**715557 (A+)**					
207	1.6 THP	EP6DT	09/2006 ►	**818015**	+		**715556 (-/M+)**	**715557 (A+)**			135 CC	**699935**	
207	1.6 VTi, 1.6e 16V	EP6	01/2007 ►	**814095**	+		**715556 (-/M+)**	**715557 (A+)**					
207	1.6e 16V	TU5JP4AL4	03/2007 ►	**818015**	+		**715556 (-/M+)**	**715557 (A+)**					

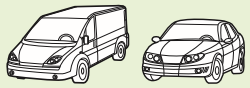

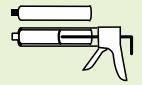

							PA	CA	NEW	ES			
PEUGEOT (.../...)													
207	1.4 HDi	DV4TD	03/2006 ►	**814095**	+▯		**715556 (-/M+)**	**715557 (A+)**			135 CC	**699935**	
207	1.6 HDi 16V (90)	DV6TED4	03/2006 ►	**818015**	+▯		**715556 (-/M+)**	**715557 (A+)**			135 CC	**699935**	
207	1.6 HDi, 1.6 HDi 16V	DV6ATED4, DV6TED4	06/2008 ►	**818015**	+▯		**715556 (-/M+)**	**715557 (A+)**					
306 (97>)	1.4	TU3.2	03/1997 ► 09/2000	**817230**		**508873**	**715646 (+)**		**699026**	**699526**	135 CC	**699935**	>ch 8700
306 (97>)	1.4	TU3.2	10/2000 ► 03/2002	**817230**		**508873**	**715646 (+)**						
306 (97>)	1.4 i	TU3JP	03/1997 ► 09/2000	**817230**		**508873**	**715646 (+)**		**699026**	**699526**	135 CC	**699935**	>ch 8700
306 (97>)	1.4 i	TU3JP	10/2000 ► 03/2002	**817230**		**508873**	**715646 (+)**						
306 (97>)	1.6 i	TU5JP	03/1997 ► 09/2000	**817230**		**508873**	**715646 (+)**		**699026**	**699526**	135 CC	**699935**	>ch 8700
306 (97>)	1.6 i	TU5JP	10/2000 ► 09/2002	**817230**		**508873**	**715646 (+)**		**699026**	**699526**	135 CC	**699935**	
306 (97>)	1.8 i	XU7JP	03/1997 ► 02/2002	**817230**		**508873**	**715646 (+)**		**699236**	**699736**	135 CC	**699935**	
306 (97>)	1.8 i 16V	XU7JP4	03/1997 ► 02/2002	**817229**		**508873**	**715646 (+)**		**699236**	**699736**	135 CC	**699935**	
306 (97>)	1.8 i 16V	XU7JP4	03/1997 ► 09/2002	**817230**		**508873**	**715646 (+)**		**699236**	**699736**	135 CC	**699935**	
306 (97>)	2.0 i 16V	XU10J4R	03/1997 ► 09/2002	**817230**		**508873**	**715646 (+)**		**699236**	**699736**	135 CC	**699935**	
306 (97>)	2.0 i 16V	XU10J4R, XU10J4RS	03/1997 ► 09/2002	**817230**		**508873**	**715646 (+)**		**699236**	**699736**	135 CC	**699935**	
306 (97>)	1.8 D	XUD7	03/1997 ► 02/2002	**817229**		**508873**	**715646 (+)**		**699236**	**699736**	135 CC	**699935**	
306 (97>)	1.8 D	XUD7	03/1997 ► 02/2002	**817229**		**508873**	**715646 (+)**		**699236**	**699736**	135 CC	**699935**	
306 (97>)	1.9 D	XUD9A	03/1997 ► 03/2002	**817229**		**508873**	**715646 (+)**		**699236**	**699736**	135 CC	**699935**	
306 (97>)	1.9 D	XUD9A	03/1997 ► 03/2002	**817229**		**508873**	**715646 (+)**		**699236**	**699736**	135 CC	**699935**	
306 (97>)	1.9 SD	XUD9BSD	07/1997 ► 03/2002	**817229**		**508873**	**715646 (+)**		**699236**	**699736**	135 CC	**699935**	
306 (97>)	1.9 TD	XUD9TE	03/1997 ► 03/2002	**817229**		**508873**	**715646 (+)**		**699236**	**699736**	135 CC	**699935**	
306 (97>)	1.9 TD	XUD9TE	03/1997 ► 03/2002	**817229**		**508873**	**715646 (+)**		**699236**	**699736**	135 CC	**699935**	
306 (97>)	2.0 HDi	DW10TD	03/1999 ► 03/2002	**817229**		**508873**	**715646 (+)**		**699236**	**699736**	135 CC	**699935**	
307 (2001>2004)	1.4 i	TU3JP	09/2001 ► 12/2001	**817524**	+▯	**509525**	**698664 (-/M+)**	**698714 (A+)**	**813189**	**813689**	135 CC	**699935**	>ch 9155
307 (2001>2004)	1.4 i	TU3JP	01/2002 ► 08/2004	**817524**	+▯	**509525**	**698664 (-/M+)**	**698714 (A+)**	**813189**	**813689**			>ch 10158
307 (2001>2004)	1.4 i	TU3JP	08/2004 ► 06/2005	**818171**	+▯		**698664 (-/M+)**	**698714 (A+)**	**813189**	**813689**			ch 10159>
307 (2001>2004)	1.4 i 16V	ET3J4	10/2003 ► 05/2004	**817524**	+▯	**509525**	**698664 (-/M+)**	**698714 (A+)**	**813189**	**813689**	135 CC	**699935**	>ch 10045
307 (2001>2004)	1.4 i 16V	ET3J4	06/2004 ► 08/2004	**817524**	+▯	**509525**	**698664 (-/M+)**	**698714 (A+)**	**813189**	**813689**			>ch 10158

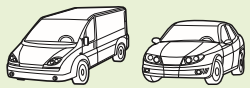

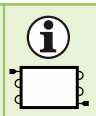

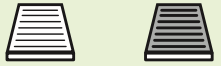

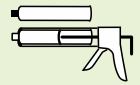

PEUGEOT (.../...)

								PA	CA	NEW	ES			
307 (2001>2004)	1.4 i 16V	ET3J4	08/2004 ► 06/2005	**818171**	+			**698664 (-/M+)**	**698714 (A+)**	**813189**	**813689**			ch 10159>
307 (2001>2004)	1.6 i, 1.6 i 16V	TU5JP4	03/2001 ► 12/2001	**817524**	+		**509525**	**698664 (-/M+)**	**698714 (A+)**	**813189**	**813689**	135 CC	**699935**	>ch 9155
307 (2001>2004)	1.6 i	TU5JP4	01/2002 ► 08/2004	**817524**	+		**509525**	**698664 (-/M+)**	**698714 (A+)**	**813189**	**813689**			>ch 10158
307 (2001>2004)	1.6 i 16V	TU5JP4	01/2002 ► 08/2004	**817524**	+		**509525**	**698664 (-/M+)**	**698714 (A+)**	**813189**	**813689**			>ch 10158
307 (2001>2004)	2.0 i 16V	EW10J4	03/2001 ► 08/2004	**817524**	+		**509525**	**698664 (-/M+)**	**698714 (A+)**	**813189**	**813689**	135 CC	**699935**	
307 (2001>2004)	1.4 HDi	DV4TD	02/2002 ► 05/2004	**817524**	+		**509525**	**698664 (-/M+)**	**698714 (A+)**	**813189**	**813689**	135 CC	**699935**	>ch 10045
307 (2001>2004)	1.4 HDi	DV4TD	06/2004 ► 08/2004	**817524**	+		**509525**	**698664 (-/M+)**	**698714 (A+)**	**813162**				>ch 10158
307 (2001>2004)	2.0 HDi	DW10TD	03/2001 ► 05/2001	**817524**	+		**509525**	**698664 (-/M+)**	**698714 (A+)**					>ch 10158
307 (2001>2004)	2.0 HDi	DW10ATED, DW10TD	06/2001 ► 11/2001	**817526**	+		**509525**	**698664 (-/M+)**	**698714 (A+)**	**699272**	**699772**	135 CC	**699935**	>ch 10163
307 (2001>2004)	2.0 HDi	DW10ATED, DW10TD	12/2001 ► 05/2002	**817526**	+		**509525**	**698664 (-/M+)**	**698714 (A+)**	**699272**	**699772**	135 CC	**699935**	ch 9156, ch 9338>ch 9337
307 (2001>2004)	2.0 HDi	DW10ATED, DW10TD	06/2002 ► 08/2004	**817526**	+		**509525**	**698664 (-/M+)**	**698714 (A+)**	**699358**	**699858**	135 CC	**699935**	ch 9338>
307 (2001>2004)	2.0 HDi	DW10TD	09/2004 ► 03/2005	**818171**	+			**698664 (-/M+)**	**698714 (A+)**	**699358**	**699858**	135 CC	**699935**	ch 9338>
307 (2001>2004)	2.0 HDi	DW10ATED, DW10TD	09/2004 ► 06/2005	**818170**	+			**698664 (-/M+)**	**698714 (A+)**	**699358**	**699858**	135 CC	**699935**	ch 9338>
307 (2001>2004)	2.0 HDi 16V	DW10BTED4	09/2004 ► 06/2005	**818170**	+			**698664 (-/M+)**	**698714 (A+)**	**699359**		135 CC	**699935**	ch 10164>
406 (95>99)	1.6 i	XU5JP	10/1995 ► 03/1999	**817375**			**508872**	**698203**	**698748 (+)**	**699236**	**699736**	135 CC	**699935**	
406 (95>99)	1.8 i	XU7JB, XU7JP	10/1995 ► 10/1996	**817375**			**508872**	**698203**	**698748 (+)**	**699236**	**699736**	135 CC	**699935**	
406 (95>99)	1.8 i	XU7JB, XU7JP	11/1996 ► 08/1998	**817375**			**508872**	**698203**	**698748 (+)**	**699236**	**699736**	135 CC	**699935**	>ch 7958
406 (95>99)	1.8 i	XU7JB, XU7JP	09/1998 ► 05/1999	**817375**			**508872**	**698203**	**698748 (+)**	**699236**	**699736**	135 CC	**699935**	
406 (95>99)	1.8 i 16V	XU7JP4	10/1995 ► 10/1996	**817375**			**508872**	**698203**	**698748 (+)**	**699236**	**699736**	135 CC	**699935**	>ch 9001
406 (95>99)	1.8 i 16V	XU7JP4	11/1996 ► 08/1998	**817375**			**508872**	**698203**	**698748 (+)**	**699236**	**699736**	135 CC	**699935**	>ch 9001
406 (95>99)	1.8 i 16V	XU7JP4	09/1998 ► 04/1999	**817375**			**508872**	**698203**	**698748 (+)**	**699236**	**699736**	135 CC	**699935**	>ch 9001
406 (95>99)	2.0 i 16V	XU10J4R	10/1995 ► 10/1996	**817375**			**508872**	**698203**	**698748 (+)**	**699236**	**699736**	135 CC	**699935**	>ch 8210
406 (95>99)	2.0 i 16V	XU10J4R	11/1996 ► 08/1998	**817375**			**508872**	**698203**	**698748 (+)**	**699236**	**699736**	135 CC	**699935**	>ch 7958
406 (95>99)	2.0 i 16V	XU10J4R	09/1998 ► 05/1999	**817375**			**508872**	**698203**	**698748 (+)**	**699236**	**699736**	135 CC	**699935**	
406 (95>99)	2.0 i Turbo	XU10J2TE	07/1996 ► 10/1996	**817375**			**508872**	**698203**	**698748 (+)**	**699236**	**699736**	135 CC	**699935**	
406 (95>99)	2.0 i Turbo	XU10J2TE	11/1996 ► 08/1998	**817375**			**508872**	**698203**	**698748 (+)**	**699236**	**699736**	135 CC	**699935**	
406 (95>99)	2.0 i Turbo	XU10J2TE	09/1998 ► 03/1999	**817375**			**508872**	**698203**	**698748 (+)**	**699236**	**699736**	135 CC	**699935**	

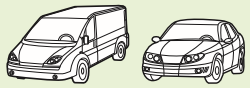

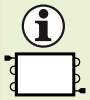

PA

CA

NEW ES

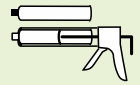

PEUGEOT (.../...)

406 (95>99)	1.9 TD	XUD9B/SD, XUD9BTF, XUD9TE	11/1995 ► 10/1996	**817375**		**508872**	**698203**	**698748 (+)**	**699155**	**699655**	265 CC	**699937**	
406 (95>99)	1.9 TD	XUD9B/SD, XUD9BTF, XUD9TE	11/1995 ► 10/1996	**817375**		**508872**	**698203**	**698748 (+)**	**699236**	**699736**	135 CC	**699935**	
406 (95>99)	1.9 TD	XUD9BTF, XUD9SD, XUD9TE	11/1996 ► 08/1998	**817375**		**508872**	**698203**	**698748 (+)**	**699236**	**699736**	135 CC	**699935**	>ch 7958
406 (95>99)	1.9 TD	XUD9BSD, XUD9BTF, XUD9SD/TE	09/1998 ► 03/1999	**817375**		**508872**	**698203**	**698748 (+)**	**699155**	**699655**	265 CC	**699937**	
406 (95>99)	1.9 TD	XUD9BSD, XUD9BTF, XUD9SD/TE	09/1998 ► 03/1999	**817375**		**508872**	**698203**	**698748 (+)**	**699236**	**699736**	135 CC	**699935**	
406 (95>99)	2.0 HDi	DW10ATED	10/1998 ► 03/1999	**817375**		**508872**	**698203**	**698748 (+)**	**699155**	**699655**	265 CC	**699937**	
406 (95>99)	2.1 TD	XUD11BTE	11/1995 ► 10/1996	**817375**		**508872**	**698203**	**698748 (+)**	**699236**	**699736**	135 CC	**699935**	
406 (95>99)	2.1 TD	XUD11BTE	11/1995 ► 10/1996	**817375**		**508872**	**698203**	**698748 (+)**	**699155**	**699655**	265 CC	**699937**	
406 (95>99)	2.1 TD	XUD11BTE	11/1996 ► 08/1998	**817375**		**508872**	**698203**	**698748 (+)**	**699155**	**699655**	265 CC	**699937**	>ch 7958
406 (95>99)	2.1 TD	XUD11BTE	11/1996 ► 08/1998	**817375**		**508872**	**698203**	**698748 (+)**	**699236**	**699736**	135 CC	**699935**	>ch 7958
406 (95>99)	2.1 TD	XUD11BTE	09/1998 ► 03/1999	**817375**		**508872**	**698203**	**698748 (+)**	**699155**	**699655**	265 CC	**699937**	
406 (95>99)	2.1 TD	XUD11BTE	09/1998 ► 03/1999	**817375**		**508872**	**698203**	**698748 (+)**	**699236**	**699736**	135 CC	**699935**	
406 (99>)	1.6 i	XU5JP	04/1999 ► 05/1999	**817375**		**508872**	**698203 (+)**	**698748 (+)**	**699236**	**699736**	135 CC	**699935**	>ch 9001
406 (99>)	1.6 i	XU5JP	06/1999 ► 03/2004	**817375**		**508872**	**698203 (+)**	**698748 (+)**	**699236**	**699736**	135 CC	**699935**	>ch 9001
406 (99>)	1.8 i	XU7JP	06/1999 ► 07/2001	**817375**		**508872**	**698203 (+)**	**698748 (+)**	**699236**	**699736**	135 CC	**699935**	>ch 9001
406 (99>)	1.8 i	XU7JP	08/2001 ► 03/2004	**817375**			**698203 (+)**	**698748 (+)**	**699236**	**699736**	135 CC	**699935**	
406 (99>)	1.8 i 16V	XU7JP4	04/1999 ► 05/1999	**817375**		**508872**	**698203 (+)**	**698748 (+)**	**699106**	**699606**	135 CC	**699935**	>ch 9001
406 (99>)	1.8 i 16V	XU7JP4	04/1999 ► 05/1999	**817375**		**508872**	**698203 (+)**	**698748 (+)**	**699236**	**699736**	135 CC	**699935**	>ch 9001
406 (99>)	1.8 i 16V	XU7JP4	06/1999 ► 07/2001	**817375**		**508872**	**698203 (+)**	**698748 (+)**	**699236**	**699736**	135 CC	**699935**	>ch 9001
406 (99>)	1.8 i 16V	XU7JP4	06/1999 ► 07/2001	**817375**		**508872**	**698203 (+)**	**698748 (+)**	**699106**	**699606**	135 CC	**699935**	>ch 9001
406 (99>)	1.8 i 16V	EW7J4	10/2000 ► 06/2002	**817667**	+	**509791**	**698203 (+)**	**698748 (+)**	**699199**	**699699**	135 CC	**699935**	>ch 9337
406 (99>)	1.8 i 16V	EW7J4	07/2002 ► 04/2004	**817667**	+	**509791**	**698203 (+)**	**698748 (+)**	**813158**				
406 (99>)	1.8 i 16V	XU7JP4	08/2001 ► 04/2004	**817375**		**508872**	**698203 (+)**	**698748 (+)**	**699236**	**699736**	135 CC	**699935**	>ch 9001
406 (99>)	1.8 i 16V	XU7JP4	08/2001 ► 03/2004	**817375**			**698203 (+)**	**698748 (+)**	**699106**	**699606**	135 CC	**699935**	
406 (99>)	2.0 i 16V	XU10J4R	06/1999 ► 04/2004	**817375**		**508872**	**698203 (+)**	**698748 (+)**	**699236**	**699736**	135 CC	**699935**	>ch 9001
406 (99>)	2.0 i 16V	EW10J4	04/1999 ► 06/2002	**817667**	+	**509791**	**698203 (+)**	**698748 (+)**	**699199**	**699699**	135 CC	**699935**	>ch 9337
406 (99>)	2.0 i 16V	EW10J4	07/2002 ► 04/2004	**817667**	+	**509791**	**698203 (+)**	**698748 (+)**	**813158**				

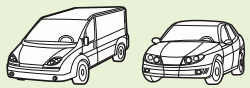

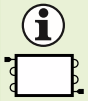

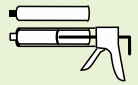

								PA	CA	NEW	ES			
PEUGEOT (.../...)														
406 (99>)	2.0 16V	EW10J4	05/2003 ► 10/2004	**817667**	+	**509791**	698203 (+)	698748 (+)	813158					
406 (99>)	2.0 HPi 16V	EW10D	10/2001 ► 06/2002	**817667**	+	**509791**	698203 (+)	698748 (+)	699199	699699	135 CC	**699935**	>ch 9337
406 (99>)	2.2 i 16V	EW12J4	05/2000 ► 06/2002	**817667**	+	**509791**	698203 (+)	698748 (+)	699199	699699	135 CC	**699935**	>ch 9337
406 (99>)	2.2 i 16V	EW12J4	07/2002 ► 10/2004	**817667**	+	**509791**	698203 (+)	698748 (+)	813158				
406 (99>)	2.0 HDi	DW10ATED, DW10TD	04/1999 ► 12/2000	**817667**	+	**509791**	698203 (+)	698748 (+)	699155	699655	265 CC	**699937**	>ch 8791, ch 8971
406 (99>)	2.0 HDi	DW10ATED, DW10TD	01/2001 ► 05/2002	**817667**	+	**509791**	698203 (+)	698748 (+)					
406 (99>)	2.0 HDi	DW10ATED, DW10TD	06/2002 ► 04/2004	**817667**	+	**509791**	698203 (+)	698748 (+)	699272	699772	135 CC	**699935**	ch 9338>
406 (99>)	2.2 HDi 16V	DW12TED4	10/2000 ► 06/2001	**817667**	+	**509791**	698203 (+)	698748 (+)	699236	699736	135 CC	**699935**	>ch 8973
406 (99>)	2.2 HDi 16V	DW12TED4	07/2001 ► 05/2002	**817667**	+	**509791**	698203 (+)	698748 (+)					
406 (99>)	2.2 HDi 16V	DW12TED4	06/2002 ► 04/2003	**817667**	+	**509791**	698203 (+)	698748 (+)	699272	699772	135 CC	**699935**	
406 (99>)	2.2 HDi 16V	DW12TED4	05/2003 ► 10/2004	**817667**	+	**509791**	698203 (+)	698748 (+)	699272	699772	135 CC	**699935**	
RENAULT														
CLIO II (98>2001)	1.2 i	D7F	03/1998 ► 11/1998	**817171**	+	**509404**	698255	715538	699059	699559	135 CC	**699935**	>ch 981211
CLIO II (98>2001)	1.2 i	D7F	12/1998 ► 03/2001	**817428**	+	**509404**	698255	715538	699202		135 CC	**699935**	ch 981211>ch 000505
CLIO II (98>2001)	1.2 i	D7F	12/1998 ► 03/2001	**817428**	+	**509404**	698255	715538	699234	699734	135 CC	**699935**	ch 991022>
CLIO II (98>2001)	1.4 i	E7J	03/1998 ► 03/2001	**817171**	+	**509404**	698255	715538	699144	699644	135 CC	**699935**	
CLIO II (98>2001)	1.4 i 16V	K4J	09/1999 ► 10/1999	**817171**	+	**509404**	698255	715538	699218	699718	135 CC	**699935**	>ch 991022
CLIO II (98>2001)	1.4 i 16V	K4J	11/1999 ► 03/2001	**817428**	+	**509404**	698255	715538	699218	699718	135 CC	**699935**	ch 991022>
CLIO II (98>2001)	1.6 i	K7M	03/1998 ► 03/2001	**817171**	+	**509404**	698255	715538	699144	699644	135 CC	**699935**	
CLIO II (98>2001)	1.6 i	K7M	07/1999 ► 03/2001	**817171**	+	**509404**	698255	715538	699218	699718	135 CC	**699935**	
CLIO II (98>2001)	1.6 i 16V	K4M	07/1998 ► 03/1999	**817171**	+	**509404**	698255	715538	699059	699559	135 CC	**699935**	>ch 990310
CLIO II (98>2001)	1.6 i 16V	K4M	07/1998 ► 03/1999	**817428**	+	**509404**	698255	715538	699221	699721	135 CC	**699935**	>ch 990310
CLIO II (98>2001)	1.6 i 16V	K4M	04/1999 ► 03/2001	**817428**	+	**509404**	698255	715538	699218	699718	135 CC	**699935**	ch 990310>
CLIO II (98>2001)	2.0 i 16V	F4R	01/2000 ► 03/2001	**817171**	+	**509404**	698255	715538	699239	699739	135 CC	**699935**	
CLIO II (98>2001)	1.9 D	F8Q	03/1998 ► 12/1998	**817171**	+	**509404**	698255	715538	699107	699607	135 CC	**699935**	>ch 981223
CLIO II (98>2001)	1.9 D	F8Q	12/1998 ► 03/2001	**817171**	+	**509404**	698255	715538	699191	699691	135 CC	**699935**	ch 981223>
CLIO II (98>2001)	1.9 dTi	F9Q	11/1999 ► 10/1999	**817171**	+	**509404**	698255	715538	699191	699691	135 CC	**699935**	>ch 991022

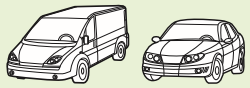

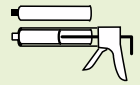

							PA	CA	NEW	ES			
RENAULT (.../...)													
CLIO II (98>2001)	1.9 dTi	F9Q	11/1999 ► 03/2001	**817428**	+[i]	**509404**	**698255**	**715538**	**699191**	**699691**	135 CC	**699935**	ch 991022>
CLIO II (2001>2005)	1.0 i	D7D	04/2001 ►	**817428**	+[i]	**509404**	**698255**	**715538**	**699234**	**699734**	135 CC	**699935**	
CLIO II (2001>2005)	1.2 i	D7F	04/2001 ►	**817428**	+[i]	**509404**	**698255**	**715538**	**699234**	**699734**	135 CC	**699935**	
CLIO II (2001>2005)	1.2 i 16V	D4F	04/2001 ►	**817428**	+[i]	**509404**	**698255**	**715538**	**699234**	**699734**	135 CC	**699935**	>ch 030324
CLIO II (2001>2005)	1.4 i	E7J	04/2001 ►	**817428**	+[i]	**509404**	**698255**	**715538**	**699144**	**699644**	135 CC	**699935**	SD7V16
CLIO II (2001>2005)	1.4 i	E7J, K7J	04/2001 ►	**817428**	+[i]	**509404**	**698255**	**715538**	**699218**	**699718**	135 CC	**699935**	SD6V12
CLIO II (2001>2005)	1.4 i 16V	K4J	04/2001 ► 03/2003	**817428**	+[i]	**509404**	**698255**	**715538**	**699218**	**699718**	135 CC	**699935**	>ch 030324
CLIO II (2001>2005)	1.6 i	K7M	04/2001 ►	**817171**	+[i]	**509404**	**698255**	**715538**	**699144**	**699644**	135 CC	**699935**	
CLIO II (2001>2005)	1.6 i 16V	K4M	04/2001 ► 03/2003	**817428**	+[i]	**509404**	**698255**	**715538**	**699218**	**699718**	135 CC	**699935**	>ch 030324
CLIO II (2001>2005)	2.0 i 16V	F4R	04/2001 ►	**817171**	+[i]	**509404**	**698255**	**715538**	**699239**	**699739**	135 CC	**699935**	
CLIO II (2001>2005)	1.5 dCi	K9K	04/2001 ► 01/2002	**817428**	+[i]	**509404**	**698255**	**715538**	**699218**	**699718**	135 CC	**699935**	>ch 020215
CLIO II (2001>2005)	1.5 dCi	K9K	04/2001 ►	**817602**		**509792**	**698255**	**715538**	**699218**	**699718**	135 CC	**699935**	ch 020115>ch 040906
CLIO II (2001>2005)	1.5 dCi	K9K	01/2004 ►	**817646**		**509792**	**698255**	**715538**	**699218**	**699718**	135 CC	**699935**	>ch 040906
CLIO II (2001>2005)	1.9 D	F8Q	04/2001 ►	**817171**	+[i]	**509404**	**698255**	**715538**	**699191**	**699691**	135 CC	**699935**	
CLIO II (2001>2005)	1.9 dTi	F9Q	04/2001 ►	**817428**	+[i]	**509404**	**698255**	**715538**	**699191**	**699691**	135 CC	**699935**	
CLIO III (2005)	1.2 i 16V	D4F	09/2005 ►				**698753**		**813132**	**813632**	135 CC	**699935**	
CLIO III (2005)	1.4 i 16V	K4J	09/2005 ►				**698753**		**813131**	**813631**	135 CC	**699935**	
CLIO III (2005)	1.6 i 16V	K4M	09/2005 ►	**818165**			**698753**		**813131**	**813631**	135 CC	**699935**	
CLIO III (2005)	1.5 dCi	K9K	09/2005 ►	**818165**			**698753**		**813131**	**813631**	135 CC	**699935**	
LAGUNA (98>2000)	1.6 i 16V	K4M	05/1998 ► 12/2000	**818008**		**509340**	**698173**		**699092**	**699592**	135 CC	**699936**	
LAGUNA (98>2000)	1.8 i	F3P	09/1999 ► 12/2000	**816867**		**508623**	**698173**		**699088**	**699588**	135 CC	**699936**	
LAGUNA (98>2000)	1.8 i 16V	F4P	09/1998 ► 12/2000	**818008**		**509340**	**698173**		**699088**	**699588**	135 CC	**699936**	
LAGUNA (98>2000)	2.0 i	F3R	07/1999 ► 12/2000	**818008**		**509340**	**698173**		**699088**	**699588**	135 CC	**699936**	
LAGUNA (98>2000)	2.0 i	F3R	05/1998 ► 12/2000	**816867**		**509340**	**698173**		**699088**	**699588**	135 CC	**699936**	
LAGUNA (98>2000)	2.0 i	F3R	05/1998 ► 12/2000	**818008**		**508623**	**698173**		**699088**	**699588**	135 CC	**699936**	
LAGUNA (98>2000)	2.0 i	F3R	05/1998 ► 12/2000	**816867**		**508623**	**698173**		**699088**	**699588**	135 CC	**699936**	
LAGUNA (98>2000)	2.0 i 16V	N7Q	05/1998 ► 09/1999	**816867**		**508623**	**698173**						

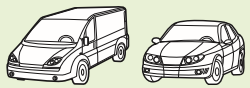

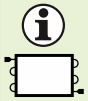

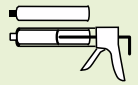

RENAULT (.../...)

								PA	CA	NEW	ES			
LAGUNA (98>2000)	2.0 i 16V	F4R	10/1999 ► 12/2000	**816867**		**508623**	**698173**		**699088**	**699588**	135 CC	**699936**	
LAGUNA (98>2000)	1.9 dCi	F9Q	09/1999 ► 12/2000	**818008**		**509340**	**698173**		**699088**	**699588**	135 CC	**699936**	
LAGUNA (98>2000)	1.9 dTi	F9Q	05/1998 ► 12/2000	**818008**		**509340**	**698173**		**699088**	**699588**	135 CC	**699936**	
LAGUNA II (2001>)	1.6 i 16V	K4M	01/2001 ►	**817568**		**509727**	**698594**	**698715**	**699241**	**699741**	265 CC	**699937**	PA/ CA LHD only
LAGUNA II (2001>)	1.8 i 16V	F4P	01/2001 ►	**817568**		**509727**	**698594**	**698715**	**699240**	**699740**	200 CC	**699937**	PA/ CA LHD only
LAGUNA II (2001>)	2.0 i 16V	F4R	01/2001 ►	**817568**		**509727**	**698594**	**698715**	**699240**	**699740**	200 CC	**699937**	PA/ CA LHD only
LAGUNA II (2001>)	2.0 ide 16V	F5R	01/2001 ►	**817568**		**509727**	**698594**	**698715**	**699240**	**699740**	200 CC	**699937**	PA/ CA LHD only
LAGUNA II (2001>)	1.9 dCi	F9Q	01/2001 ►	**817568**		**509727**	**698594**	**698715**	**699240**	**699740**	200 CC	**699937**	PA/ CA LHD only
LAGUNA II (2001>)	2.2 dCi 16V	G9T	01/2001 ►	**817568**		**509727**	**698594**	**698715**	**699240**	**699740**	200 CC	**699937**	PA/ CA LHD only
MÉGANE (95>99)	ALL	ALL	11/1995 ► 04/1198				**698149 (+)**						>ch 980402
MÉGANE (95>99)	ALL	ALL	01/1998 ► 02/1999				**698225 (-)**	**715538 (-)**					> ch 980403
MÉGANE (95>99)	ALL	ALL	04/1998 ► 02/1999				**698276 (+)**						> ch 980403
MÉGANE (95>99)	1.4 i	E7J	11/1995 ► 06/1996	**816912**		**508624**			**699036**	**699536**	135 CC	**699935**	>ch 960611/
MÉGANE (95>99)	1.4 i	E7J	07/1996 ► 02/1999	**816912**		**508624**			**699094**	**699594**	135 CC	**699935**	
MÉGANE (95>99)	1.4 i	E7J	10/1997 ► 02/1999	**816912**		**508624**			**699157**	**699657**	220 CC	**699937**	ch 971001>
MÉGANE (95>99)	1.4 i 16V	K4J	09/1998 ► 02/1999	**817197**		**508624**			**699045**	**699545**	135 CC	**699935**	
MÉGANE (95>99)	1.6 i	K7M	11/1995 ► 06/1996	**816912**		**508624**			**699036**	**699536**	135 CC	**699935**	>ch 960611
MÉGANE (95>99)	1.6 i	K7M	07/1996 ► 09/1997	**816912**		**508624**			**699094**	**699594**	135 CC	**699935**	>ch 980507
MÉGANE (95>99)	1.6 i	K7M	09/1997 ► 10/1998	**816912**		**508624**			**699157**	**699657**	220 CC	**699937**	
MÉGANE (95>99)	1.6 i	K7M	11/1998 ► 02/1999	**816912**		**508624**			**699157**	**699657**	220 CC	**699937**	>ch 980507
MÉGANE (95>99)	1.6 i 16V	K4M	06/1998 ► 02/1999	**817197**		**508624**							
MÉGANE (95>99)	2.0 i	F3R	11/1995 ► 06/1996	**816912**		**508624**			**699036**	**699536**	135 CC	**699935**	>ch 960611
MÉGANE (95>99)	2.0 i	F3R	06/1996 ► 06/1997	**816912**		**508624**			**699094**	**699594**	135 CC	**699935**	ch 960611>ch 971001
MÉGANE (95>99)	2.0 i	F3R	07/1997 ► 02/1999	**816912**		**508624**			**699045**	**699545**	135 CC	**699935**	
MÉGANE (95>99)	2.0 i 16V	F7R	11/1995 ► 04/1998	**816912**		**508624**			**699093**	**699593**	135 CC	**699935**	
MÉGANE (95>99)	2.0 i 16V	F7R	05/1998 ► 02/1999	**817197**		**508624**			**699093**	**699593**	135 CC	**699935**	ch 980507>
MÉGANE (95>99)	2.0 ide 16V	F5R	10/1998 ► 02/1999	**817197**		**508624**							

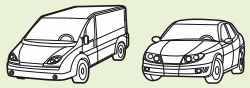

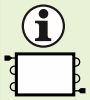

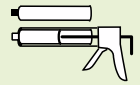

							PA	CA	NEW	ES			
RENAULT (.../...)													
MÉGANE (95>99)	1.9 D	F8Q	11/1995 ► 03/1997	**816912**		**508624**			**699045**	**699545**	135 CC	**699935**	
MÉGANE (95>99)	1.9 D	F8Q	04/1997 ► 02/1999	**816912**		**508624**			**699045**	**699545**	135 CC	**699935**	
MÉGANE (95>99)	1.9 dT	F8Q	11/1995 ► 07/1998	**816912**		**508624**			**699045**	**699545**	135 CC	**699935**	
MÉGANE (95>99)	1.9 dTi	F9Q	11/1995 ► 06/1996	**816912**		**508624**			**699036**	**699536**	135 CC	**699935**	>ch 960611
MÉGANE (95>99)	1.9 dTi	F9Q	06/1996 ► 06/1997	**816912**		**508624**			**699094**	**699594**	135 CC	**699935**	ch 960611>ch 971001
MÉGANE (95>99)	1.9 dTi	F9Q	07/1997 ► 02/1999	**816912**		**508624**			**699045**	**699545**	135 CC	**699935**	>ch 980420
MÉGANE (95>99)	1.9 dTi	F9Q	06/1998 ► 02/1999	**816912**		**508624**			**699143**	**699643**	220 CC	**699937**	ch 980420>
MÉGANE (98>)	1.4 i	E7J	02/1999 ► 10/2000	**817197**		**508624**	**698255 (-)**	**715538 (-)**	**699197**	**699697**	220 CC	**699937**	
MÉGANE (98>)	1.4 i	E7J	02/1999 ► 10/2000	**817197**		**508624**	**698276 (+)**	**715538 (-)**	**699197**	**699697**	220 CC	**699937**	
MÉGANE (98>)	1.4 i 16V	K4J	10/1998 ► 12/2000	**817197**			**698255 (-)**	**715538 (-)**	**699197**	**699697**	220 CC	**699937**	>ch 001215
MÉGANE (98>)	1.4 i 16V	K4J	10/1998 ► 12/2000	**817197**			**698276 (+)**	**715538 (-)**	**699197**	**699697**	220 CC	**699937**	>ch 001215
MÉGANE (98>)	1.4 i 16V	K4J	01/2001 ► 08/2002	**817197**		**509701**	**698255 (-)**	**715538 (-)**	**699246**	**699746**	220 CC	**699937**	
MÉGANE (98>)	1.4 i 16V	K4J	01/2001 ► 08/2002	**817197**		**509701**	**698276 (+)**	**715538 (-)**	**699246**	**699746**	220 CC	**699937**	
MÉGANE (98>)	1.6 i	K7M	02/1999 ► 10/2000	**817197**		**508624**	**698255 (-)**	**715538 (-)**	**699157**	**699657**	220 CC	**699937**	
MÉGANE (98>)	1.6 i	K7M	02/1999 ► 10/2000	**817197**		**508624**	**698276 (+)**	**715538 (-)**	**699157**	**699657**	220 CC	**699937**	
MÉGANE (98>)	1.6 i 16V	K4M	10/1998 ► 12/2000	**817197**		**508624**	**698255 (-)**	**715538 (-)**	**699197**	**699697**	220 CC	**699937**	>ch 001215
MÉGANE (98>)	1.6 i 16V	K4M	10/1998 ► 12/2000	**817197**		**508624**	**698276 (+)**	**715538 (-)**	**699197**	**699697**	220 CC	**699937**	>ch 001215
MÉGANE (98>)	1.6 i 16V	K4M	01/2001 ► 08/2002	**817197**		**508624**	**698255 (-)**	**715538 (-)**	**699246**	**699746**	220 CC	**699937**	
MÉGANE (98>)	1.6 i 16V	K4M	01/2001 ► 08/2002	**817197**		**508624**	**698276 (+)**	**715538 (-)**	**699246**	**699746**	220 CC	**699937**	
MÉGANE (98>)	1.8 i 16V	F4P	10/1999 ► 04/2001	**817197**		**508624**	**698255 (-)**	**715538 (-)**	**699143**	**699643**	220 CC	**699937**	
MÉGANE (98>)	1.8 i 16V	F4P	10/1999 ► 04/2001	**817197**		**508624**	**698276 (+)**	**715538 (-)**	**699143**	**699643**	220 CC	**699937**	
MÉGANE (98>)	1.8 i 16V	F4P	05/2001 ► 08/2001	**817197**		**509701**	**698255 (-)**	**715538 (-)**	**699143**	**699643**	220 CC	**699937**	
MÉGANE (98>)	1.8 i 16V	F4P	05/2001 ► 08/2001	**817197**		**509701**	**698276 (+)**	**715538 (-)**	**699143**	**699643**	220 CC	**699937**	
MÉGANE (98>)	2.0 i 16V	F7R	02/1999 ► 09/2002	**817197**		**508624**	**698255 (-)**	**715538 (-)**	**699093**	**699593**	135 CC	**699935**	
MÉGANE (98>)	2.0 i 16V	F7R	02/1999 ► 09/2002	**817197**		**508624**	**698276 (+)**	**715538 (-)**	**699093**	**699593**	135 CC	**699935**	
MÉGANE (98>)	2.0 i 16V	F4R	11/2001 ►	**817701**			**698255 (-)**	**715538 (-)**	**699143**	**699643**	220 CC	**699937**	
MÉGANE (98>)	2.0 i 16V	F4R	11/2001 ►	**817701**			**698276 (+)**	**715538 (-)**	**699143**	**699643**	220 CC	**699937**	

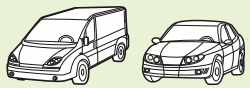

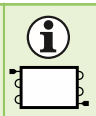

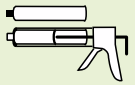

RENAULT (.../...)

							PA	CA	NEW	ES			
MÉGANE (98>)	2.0 ide 16V	F5R	02/1999 ► 12/2001	**817197**		**508624**	**698255 (-)**	**715538 (-)**					
MÉGANE (98>)	2.0 ide 16V	F5R	02/1999 ► 12/2001	**817197**		**508624**	**698276 (+)**	**715538 (-)**					
MÉGANE (98>)	1.9 D	F8Q	02/1999 ► 02/1999	**816912**		**508624**	**698276 (+)**	**715538 (-)**					>ch 990226
MÉGANE (98>)	1.9 D	F8Q	02/1999 ► 03/2001	**817197**		**508624**	**698276 (+)**	**715538 (-)**	**699143**	**699643**	220 CC	**699937**	
MÉGANE (98>)	1.9 D	F8Q	02/1999 ► 02/1999	**816912**		**508624**	**698255 (-)**	**715538 (-)**					>ch 990226
MÉGANE (98>)	1.9 D	F8Q	02/1999 ► 03/2001	**817197**		**508624**	**698255 (-)**	**715538 (-)**	**699143**	**699643**	220 CC	**699937**	
MÉGANE (98>)	1.9 dCi	F9Q	07/1999 ► 08/1999	**817197**		**508624**	**698276 (+)**	**715538 (-)**					
MÉGANE (98>)	1.9 dCi	F9Q	07/1999 ► 08/1999	**817197**		**508624**	**698255 (-)**	**715538 (-)**					
MÉGANE (98>)	1.9 dCi, 1.9 dTi	F9Q	09/1999 ► 03/2001	**817197**		**508624**	**698276 (+)**	**715538 (-)**	**699143**	**699643**	220 CC	**699937**	
MÉGANE (98>)	1.9 dCi, 1.9 dTi	F9Q	09/1999 ► 03/2001	**817197**		**508624**	**698255 (-)**	**715538 (-)**	**699143**	**699643**	220 CC	**699937**	
MÉGANE (98>)	1.9 dTi	F9Q	04/2001 ►	**817197**		**509701**	**698276 (+)**	**715538 (-)**					
MÉGANE (98>)	1.9 dTi	F9Q	04/2001 ►	**817197**		**509701**	**698255 (-)**	**715538 (-)**					
MÉGANE II	1.4 i 16V	K4J	09/2002 ► 05/2003	**817608**		**509793**	**698730**	**715539**	**699246**	**699746**	220 CC	**699937**	>ch 030520
MÉGANE II	1.4 i 16V	K4J	06/2003 ►	**817608**		**509793**	**698730**	**715539**					>ch 030520
MÉGANE II	1.6 i 16V	K4M	09/2002 ► 05/2003	**817608**		**509793**	**698730**	**715539**	**699246**	**699746**	220 CC	**699937**	>ch 030520
MÉGANE II	1.6 i 16V	K4M	06/2003 ►	**817608**		**509793**	**698730**	**715539**					>ch 030520
MÉGANE II	1.5 dCi	K9K	09/2002 ► 05/2003	**817608**		**509793**	**698730**	**715539**	**699246**	**699746**	220 CC	**699937**	>ch 030520
MÉGANE II	1.5 dCi	K9K	06/2003 ►	**817608**		**509793**	**698730**	**715539**					>ch 030520
MÉGANE II	2.0 dCi	M9R	01/2006 ►	**818002**		**509793**	**698730**	**715539**					
MÉGANE SCÉNIC (96>99)	ALL	ALL	10/1996 ► 01/1998				**698177 (+)**						> ch 9801101
MÉGANE SCÉNIC (96>99)	ALL	ALL	01/1998 ► 09/1999				**698279 (+)**						> ch 980102
MÉGANE SCÉNIC (96>99)	ALL	ALL	10/1996 ► 09/1999				**698176 (-)**						
MÉGANE SCÉNIC (96>99)	ALL	ALL	10/1996 ► 09/1999				**698175**						RHD
MÉGANE SCÉNIC (96>99)	1.4 i	E7J	10/1996 ► 09/1997	**816912**		**508624**			**699094**	**699594**	135 CC	**699935**	
MÉGANE SCÉNIC (96>99)	1.4 i	E7J	10/1997 ► 10/1997	**816912**		**508624**			**699094**	**699594**	135 CC	**699935**	>ch 971001
MÉGANE SCÉNIC (96>99)	1.4 i	E7J	10/1997 ► 06/1998	**816912**		**508624**			**699157**	**699657**	220 CC	**699937**	ch 971001>
MÉGANE SCÉNIC (96>99)	1.4 i	E7J	07/1998 ► 09/1999	**817197**		**508624**			**699157**	**699657**	220 CC	**699937**	

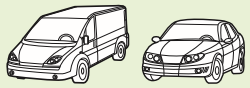

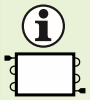

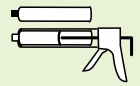

RENAULT (.../...)

MÉGANE SCÉNIC (96>99)	1.4 i 16V	K4J	02/1999 ► 08/1999	**817197**		**508624**			**699157**	**699657**	220 CC	**699937**	
MÉGANE SCÉNIC (96>99)	1.4 i 16V	K4J	09/1999 ► 09/1999	**817509**		**508624**			**699157**	**699657**	220 CC	**699937**	
MÉGANE SCÉNIC (96>99)	1.6 i	K7M	10/1996 ► 09/1997	**816912**		**508624**			**699094**	**699594**	135 CC	**699935**	
MÉGANE SCÉNIC (96>99)	1.6 i	K7M	09/1997 ► 05/1998	**816912**		**508624**			**699157**	**699657**	220 CC	**699937**	>ch 980507
MÉGANE SCÉNIC (96>99)	1.6 i	K7M	05/1998 ► 09/1999	**817197**		**508624**			**699157**	**699657**	220 CC	**699937**	ch 980507>
MÉGANE SCÉNIC (96>99)	2.0 i	F3R	10/1996 ► 05/1998	**816912**		**508624**			**699045**	**699545**	135 CC	**699935**	>ch 980507
MÉGANE SCÉNIC (96>99)	2.0 i	F3R	05/1998 ► 09/1999	**817197**		**508624**			**699045**	**699545**	135 CC	**699935**	ch 980507>
MÉGANE SCÉNIC (96>99)	1.9 D	F8Q	10/1996 ► 04/1997	**816912**		**508624**			**699045**	**699545**	135 CC	**699935**	
MÉGANE SCÉNIC (96>99)	1.9 D	F8Q	05/1997 ► 05/1998	**816912**		**508624**			**699045**	**699545**	135 CC	**699935**	>ch 980529
MÉGANE SCÉNIC (96>99)	1.9 D	F8Q	05/1998 ► 05/1998	**816912**		**508624**			**699045**	**699545**	135 CC	**699935**	>ch 980529
MÉGANE SCÉNIC (96>99)	1.9 D	F8Q	05/1998 ► 05/1998	**816912**		**508624**			**699143**	**699643**	220 CC	**699937**	ch 980529>
MÉGANE SCÉNIC (96>99)	1.9 D	F8Q	05/1998 ► 09/1999	**817197**		**508624**			**699143**	**699643**	220 CC	**699937**	ch 980529>
MÉGANE SCÉNIC (96>99)	1.9 dT	F8Q	10/1996 ► 05/1998	**816912**		**508624**			**699045**	**699545**	135 CC	**699935**	>ch 980507
MÉGANE SCÉNIC (96>99)	1.9 dT	F8Q	06/1998 ► 09/1999	**817197**		**508624**			**699045**	**699545**	135 CC	**699935**	ch 980507>
MÉGANE SCÉNIC (96>99)	1.9 dTi	F9Q	04/1997 ► 03/1998	**816912**		**508624**			**699045**	**699545**	135 CC	**699935**	>ch 980507
MÉGANE SCÉNIC (96>99)	1.9 dTi	F9Q	04/1997 ► 04/1998	**817509**		**508624**			**699045**	**699545**	135 CC	**699935**	>ch 980420
MÉGANE SCÉNIC (96>99)	1.9 dTi	F9Q	04/1998 ► 09/1999	**817509**		**508624**			**699143**	**699643**	220 CC	**699937**	ch 980420>
MÉGANE SCÉNIC (96>99)	1.9 dTi	F9Q	05/1998 ► 09/1999	**817197**		**508624**			**699143**	**699643**	220 CC	**699937**	ch 980420>
MÉGANE SCÉNIC (96>99)	1.9 dTi	F9Q	05/1998 ► 09/1999	**816912**		**508624**			**699143**	**699643**	220 CC	**699937**	ch 980420>
MÉGANE SCÉNIC (99>2003)	1.4 i 16V	K4J	09/1999 ► 07/2001	**817509**		**508624**	**698512**		**699197**	**699697**	220 CC	**699937**	>ch 010716
MÉGANE SCÉNIC (99>2003)	1.4 i 16V	K4J	09/1999 ► 07/2001	**817509**		**509500**	**698512**		**699197**	**699697**	220 CC	**699937**	>ch 010716
MÉGANE SCÉNIC (99>2003)	1.4 i 16V	K4J	07/2001 ► 04/2003	**817701**		**509500**	**698512**		**699197**	**699697**	220 CC	**699937**	ch 010716>
MÉGANE SCÉNIC (99>2003)	1.4 i 16V	K4J	07/2001 ► 04/2003	**817701**		**509701**	**698512**		**699197**	**699697**	220 CC	**699937**	ch 010716>
MÉGANE SCÉNIC (99>2003)	1.6 i 16V	K4M	09/1999 ► 01/2001	**817509**		**508624**	**698512**		**699197**	**699697**	220 CC	**699937**	>ch 010716
MÉGANE SCÉNIC (99>2003)	1.6 i 16V	K4M	09/1999 ► 07/2001	**817509**		**509500**	**698512**		**699197**	**699697**	220 CC	**699937**	>ch 010716
MÉGANE SCÉNIC (99>2003)	1.6 i 16V	K4M	07/2001 ► 04/2003	**817701**		**509500**	**698512**		**699197**	**699697**	220 CC	**699937**	ch 010716>
MÉGANE SCÉNIC (99>2003)	1.6 i 16V	K4M	08/2001 ► 04/2003			**509701**	**698512**		**699197**	**699697**	220 CC	**699937**	ch 010110>

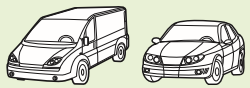

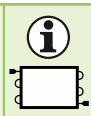

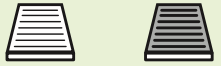

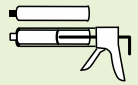

RENAULT (.../...)

						PA	CA	NEW	ES			
MÉGANE SCÉNIC (99>2003) 1.4 i 16V	K4J	09/1999 ► 07/2001	**817509**		**508624**	**698175**		**699197**	**699697**	220 CC	**699937**	>ch 010716 / RHD
MÉGANE SCÉNIC (99>2003) 1.4 i 16V	K4J	09/1999 ► 07/2001	**817509**		**509500**	**698175**		**699197**	**699697**	220 CC	**699937**	>ch 010716 / RHD
MÉGANE SCÉNIC (99>2003) 1.4 i 16V	K4J	07/2001 ► 04/2003	**817701**		**509500**	**698175**		**699197**	**699697**	220 CC	**699937**	ch 010716> / RHD
MÉGANE SCÉNIC (99>2003) 1.4 i 16V	K4J	07/2001 ► 04/2003	**817701**		**509701**	**698175**		**699197**	**699697**	220 CC	**699937**	ch 010716> / RHD
MÉGANE SCÉNIC (99>2003) 1.6 i 16V	K4M	09/1999 ► 01/2001	**817509**		**508624**	**698175**		**699197**	**699697**	220 CC	**699937**	>ch 010716 / RHD
MÉGANE SCÉNIC (99>2003) 1.6 i 16V	K4M	09/1999 ► 07/2001	**817509**		**509500**	**698175**		**699197**	**699697**	220 CC	**699937**	>ch 010716 / RHD
MÉGANE SCÉNIC (99>2003) 1.6 i 16V	K4M	07/2001 ► 04/2003	**817701**		**509500**	**698175**		**699197**	**699697**	220 CC	**699937**	ch 010716> / RHD
MÉGANE SCÉNIC (99>2003) 1.6 i 16V	K4M	08/2001 ► 04/2003			**509701**	**698175**		**699197**	**699697**	220 CC	**699937**	ch 010110> / RHD
MÉGANE SCÉNIC (99>2003) 1.8 i 16V	F4P	09/1999 ► 01/2001	**817509**		**508624**	**698175**		**699143**	**699643**	220 CC	**699937**	>ch 010716 / RHD
MÉGANE SCÉNIC (99>2003) 1.8 i 16V	F4P	09/1999 ► 04/2003	**817509**		**509500**	**698175**		**699143**	**699643**	220 CC	**699937**	>ch 010716 / RHD
MÉGANE SCÉNIC (99>2003) 1.8 i 16V	F4P	09/1999 ► 01/2001	**817509**		**508624**	**698512**		**699143**	**699643**	220 CC	**699937**	>ch 010716
MÉGANE SCÉNIC (99>2003) 1.8 i 16V	F4P	09/1999 ► 04/2003	**817509**		**509500**	**698512**		**699143**	**699643**	220 CC	**699937**	>ch 010716
MÉGANE SCÉNIC (99>2003) 1.8 i 16V	F4P	01/2001 ► 04/2003	**817509**		**509701**	**698175**		**699143**	**699643**	220 CC	**699937**	>ch 010716 / RHD
MÉGANE SCÉNIC (99>2003) 1.8 i 16V	F4P	01/2001 ► 04/2003	**817509**		**509701**	**698512**		**699143**	**699643**	220 CC	**699937**	>ch 010716
MÉGANE SCÉNIC (99>2003) 1.8 i 16V	F4P	07/2001 ► 04/2003	**817701**		**509500**	**698175**		**699143**	**699643**	220 CC	**699937**	ch 010716> / RHD
MÉGANE SCÉNIC (99>2003) 1.8 i 16V	F4P	07/2001 ► 04/2003	**817701**		**509701**	**698175**		**699143**	**699643**	220 CC	**699937**	ch 010716> / RHD
MÉGANE SCÉNIC (99>2003) 1.8 i 16V	F4P	07/2001 ► 04/2003	**817701**		**509500**	**698512**		**699143**	**699643**	220 CC	**699937**	ch 010716>
MÉGANE SCÉNIC (99>2003) 1.8 i 16V	F4P	07/2001 ► 04/2003	**817701**		**509701**	**698512**		**699143**	**699643**	220 CC	**699937**	ch 010716>
MÉGANE SCÉNIC (99>2003) 2.0 i 16V	F4R	09/1999 ► 01/2001	**817197**		**508624**	**698175**		**699143**	**699643**	220 CC	**699937**	>ch 010110 / RHD
MÉGANE SCÉNIC (99>2003) 2.0 i 16V	F4R	09/1999 ► 03/2001	**817197**		**509500**	**698175**		**699143**	**699643**	220 CC	**699937**	RHD
MÉGANE SCÉNIC (99>2003) 2.0 i 16V	F4R	09/1999 ► 07/2001	**817509**		**508624**	**698175**		**699143**	**699643**	220 CC	**699937**	>ch 010716 / RHD
MÉGANE SCÉNIC (99>2003) 2.0 i 16V	F4R	09/1999 ► 07/2001	**817509**		**509500**	**698175**		**699143**	**699643**	220 CC	**699937**	>ch 010716 / RHD
MÉGANE SCÉNIC (99>2003) 2.0 i 16V	F4R	09/1999 ► 01/2001	**817197**		**508624**	**698512**		**699143**	**699643**	220 CC	**699937**	>ch 010110
MÉGANE SCÉNIC (99>2003) 2.0 i 16V	F4R	09/1999 ► 03/2001	**817197**		**509500**	**698512**		**699143**	**699643**	220 CC	**699937**	
MÉGANE SCÉNIC (99>2003) 2.0 i 16V	F4R	09/1999 ► 07/2001	**817509**		**508624**	**698512**		**699143**	**699643**	220 CC	**699937**	>ch 010716
MÉGANE SCÉNIC (99>2003) 2.0 i 16V	F4R	09/1999 ► 07/2001	**817509**		**509500**	**698512**		**699143**	**699643**	220 CC	**699937**	>ch 010716
MÉGANE SCÉNIC (99>2003) 2.0 i 16V	F4R	07/2001 ► 04/2003	**817701**		**509500**	**698175**		**699143**	**699643**	220 CC	**699937**	ch 010716> / RHD

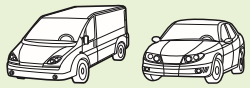

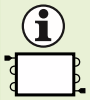

PA

CA

NEW ES

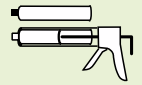

RENAULT (.../...)

MÉGANE SCÉNIC (99>2003) 2.0 i 16V	F4R	07/2001 ► 04/2003	**817701**		**509701**	**698175**		**699143**	**699643**	220 CC	**699937**	ch 010716> / RHD
MÉGANE SCÉNIC (99>2003) 2.0 i 16V	F4R	07/2001 ► 04/2003	**817701**		**509500**	**698512**		**699143**	**699643**	220 CC	**699937**	ch 010716>
MÉGANE SCÉNIC (99>2003) 2.0 i 16V	F4R	07/2001 ► 04/2003	**817701**		**509701**	**698512**		**699143**	**699643**	220 CC	**699937**	ch 010716>
MÉGANE SCÉNIC (99>2003) 1.9 dCi	F9Q	09/1999 ► 07/2001	**817509**		**509500**	**698175**		**699143**	**699643**	220 CC	**699937**	>ch 010716 / RHD
MÉGANE SCÉNIC (99>2003) 1.9 dCi	F9Q	09/1999 ► 07/2001	**817509**		**509719**	**698175**		**699143**	**699643**	220 CC	**699937**	>ch 010716 / RHD
MÉGANE SCÉNIC (99>2003) 1.9 dCi	F9Q	09/1999 ► 07/2001	**817509**			**698175**		**699143**	**699643**	220 CC	**699937**	>ch 010716 / RHD
MÉGANE SCÉNIC (99>2003) 1.9 dCi	F9Q	09/1999 ► 07/2001	**817509**		**509500**	**698512**		**699143**	**699643**	220 CC	**699937**	>ch 010716
MÉGANE SCÉNIC (99>2003) 1.9 dCi	F9Q	09/1999 ► 07/2001	**817509**		**509719**	**698512**		**699143**	**699643**	220 CC	**699937**	>ch 010716
MÉGANE SCÉNIC (99>2003) 1.9 dCi	F9Q	09/1999 ► 07/2001	**817509**			**698512**		**699143**	**699643**	220 CC	**699937**	>ch 010716
MÉGANE SCÉNIC (99>2003) 1.9 dCi	F9Q	07/2001 ► 04/2003	**817701**		**509500**	**698175**		**699143**	**699643**	220 CC	**699937**	ch 010716> / RHD
MÉGANE SCÉNIC (99>2003) 1.9 dCi	F9Q	07/2001 ► 04/2003	**817701**		**509701**	**698175**		**699143**	**699643**	220 CC	**699937**	ch 010716> / RHD
MÉGANE SCÉNIC (99>2003) 1.9 dCi	F9Q	07/2001 ► 04/2003	**817701**			**698175**		**699143**	**699643**	220 CC	**699937**	ch 010716> / RHD
MÉGANE SCÉNIC (99>2003) 1.9 dCi	F9Q	07/2001 ► 04/2003	**817701**		**509719**	**698175**		**699143**	**699643**	220 CC	**699937**	ch 010716> / RHD
MÉGANE SCÉNIC (99>2003) 1.9 dCi	F9Q	07/2001 ► 04/2003	**817701**		**509500**	**698512**		**699143**	**699643**	220 CC	**699937**	ch 010716>
MÉGANE SCÉNIC (99>2003) 1.9 dCi	F9Q	07/2001 ► 04/2003	**817701**		**509701**	**698512**		**699143**	**699643**	220 CC	**699937**	ch 010716>
MÉGANE SCÉNIC (99>2003) 1.9 dCi	F9Q	07/2001 ► 04/2003	**817701**			**698512**		**699143**	**699643**	220 CC	**699937**	ch 010716>
MÉGANE SCÉNIC (99>2003) 1.9 dCi	F9Q	07/2001 ► 04/2003	**817701**		**509719**	**698512**		**699143**	**699643**	220 CC	**699937**	ch 010716>
MÉGANE SCÉNIC (99>2003) 1.9 dTi	F9Q	09/1999 ► 07/2001	**817509**		**509719**	**698175**		**699143**	**699643**	220 CC	**699937**	>ch 010716 / RHD
MÉGANE SCÉNIC (99>2003) 1.9 dTi	F9Q	09/1999 ► 07/2001	**817509**		**509500**	**698175**		**699143**	**699643**	220 CC	**699937**	>ch 010716 / RHD
MÉGANE SCÉNIC (99>2003) 1.9 dTi	F9Q	09/1999 ► 07/2001	**817509**		**509719**	**698512**		**699143**	**699643**	220 CC	**699937**	>ch 010716
MÉGANE SCÉNIC (99>2003) 1.9 dTi	F9Q	09/1999 ► 07/2001	**817509**		**509500**	**698512**		**699143**	**699643**	220 CC	**699937**	>ch 010716
MÉGANE SCÉNIC (99>2003) 1.9 dTi	F9Q	07/2001 ► 04/2003	**817701**		**509701**	**698175**		**699143**	**699643**	220 CC	**699937**	ch 010716> / RHD
MÉGANE SCÉNIC (99>2003) 1.9 dTi	F9Q	07/2001 ► 04/2003	**817701**		**509719**	**698175**		**699143**	**699643**	220 CC	**699937**	ch 010716> / RHD
MÉGANE SCÉNIC (99>2003) 1.9 dTi	F9Q	07/2001 ► 04/2003	**817701**		**509500**	**698175**		**699143**	**699643**	220 CC	**699937**	ch 010716> / RHD
MÉGANE SCÉNIC (99>2003) 1.9 dTi	F9Q	07/2001 ► 04/2003	**817701**		**509701**	**698512**		**699143**	**699643**	220 CC	**699937**	ch 010716>
MÉGANE SCÉNIC (99>2003) 1.9 dTi	F9Q	07/2001 ► 04/2003	**817701**		**509719**	**698512**		**699143**	**699643**	220 CC	**699937**	ch 010716>
MÉGANE SCÉNIC (99>2003) 1.9 dTi	F9Q	07/2001 ► 04/2003	**817701**		**509500**	**698512**		**699143**	**699643**	220 CC	**699937**	ch 010716>

							PA	CA	NEW	ES			
RENAULT (.../...)													
SCÉNIC II	1.4 i 16V	K4J	05/2003 ►	**817608**		**509793**	**698736 (+)**	**715610 (+)**	**699246**	**699746**	220 CC	**699937**	
SCÉNIC II	1.6 i 16V	K4M	05/2003 ►	**817608**		**509793**	**698736 (+)**	**715610 (+)**	**699246**	**699746**	220 CC	**699937**	
SCÉNIC II	2.0 i 16V	F4R	05/2003 ►	**817608**		**509793**	**698736 (+)**	**715610 (+)**		**699766**			
SCÉNIC II	2.0 i Turbo 16V	F4R	03/2004 ►	**817608**		**509793**	**698736 (+)**	**715610 (+)**		**699766**			
SCÉNIC II	1.5 dCi	K9K	05/2003 ►	**817608**		**509793**	**698736 (+)**	**715610 (+)**	**699246**	**699746**	220 CC	**699937**	
SCÉNIC II	1.9 dCi	F9Q	05/2003 ►	**817608**		**509793**	**698736 (+)**	**715610 (+)**		**699766**			
TWINGO (93>98)	1.2	C3G	03/1993 ► 01/1997			**508613**	**698878 (+)**			**699537**	135 CC	**699935**	
TWINGO (93>98)	1.2 i	D7F	07/1996 ► 08/1998	**817799**		**508613**	**698878 (+)**		**699059**	**699559**	135 CC	**699935**	
TWINGO (98>)	1.2 i GPL	D7F	10/1998 ► 06/1999	**817799**		**508613**	**698878**		**699059**	**699559**	135 CC	**699935**	
TWINGO (98>)	1.2 i GPL	D7F	06/1999 ► 08/2004	**817799**			**698878**		**699234**	**699734**	135 CC	**699935**	
TWINGO (98>)	1.2 i	D7F	09/1998 ► 06/1999	**817799**		**508613**	**698878**		**699059**	**699559**	135 CC	**699935**	
TWINGO (98>)	1.2 i, 1.2 i 16V	D4F, D7F	06/1999 ► 12/2000	**817799**		**509590**	**698878**		**699234**	**699734**	135 CC	**699935**	
TWINGO (98>)	1.2 i, 1.2 i 16V	D4F, D7F	12/2000 ► 08/2004	**817799**		**509718**	**698878**		**699234**	**699734**	135 CC	**699935**	
TWINGO (2007>)	1.2 i 16V	D4F	07/2007 ►	**814061**			**698753**		**813132**	**813632**			
TWINGO (2007>)	1.5 dCi	K9K	07/2007 ►				**698753**		**813165**				
SAAB													
9-3 (2002>)	2.0 T Turbo 16V	B207E, B207L, B207R	09/2002 ►	**817711**	+	**509693**	**698711**	**698710**	**699348**	**699848**	120 CC	**699935**	>ch 51030446
9-3 (2002>)	2.0 T Turbo 16V	B207E, B207L, B207R	09/2002 ►	**817712**	+	**509693**	**698711**	**698710**	**699348**	**699848**	120 CC	**699935**	>ch 51030446
9-3 (2002>)	1.9 TiD	Z19DT, Z19DTH	06/2004 ►	**817809**	+		**698711**	**698710**	**699355**	**699855**	120 CC	**699935**	
9-3 (2002>)	1.9 TiD	Z19DT, Z19DTH	06/2004 ►	**818175**	+		**698711**	**698710**	**699355**	**699855**	120 CC	**699935**	
9-3 (2002>)	2.2 TiD 16V	D223L-125	09/2002 ►	**817712**	+		**698711**	**698710**	**699355**	**699855**	120 CC	**699935**	ch 31061630>ch 31061629
SEAT													
ALHAMBRA	1.8 i 20V	AJH	05/1998 ► 05/2000	**816948**		**508807**	**698247**	**698696**	**699305**		135 CC	**699935**	>ch 7MY505000
ALHAMBRA	1.8 i Turbo 20V	AWC	06/2000 ► 05/2003	**818004**	+	**509593**	**698247**	**698696**	**813200**	**813700**	135 CC	**699935**	>ch 7M-3-53000
ALHAMBRA	2.0 i	ADY	03/1996 ► 05/2000	**816948**		**508807**	**698247**	**698696**	**699115**	**699615**	135 CC	**699935**	
ALHAMBRA	2.0 i	ATM	06/2000 ► 05/2003	**818004**	+	**509593**	**698247**	**698696**	**813200**	**813700**	135 CC	**699935**	>ch 7M-3-530000
ALHAMBRA	1.9 TDi	1Z, AFN, AHU	03/1996 ► 05/2000	**816948**		**508807**	**698247**	**698696**	**699115**	**699615**	135 CC	**699935**	

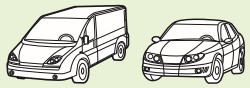

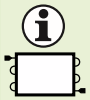

PA

CA

NEW

ES

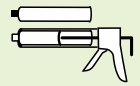

SEAT (.../...)

ALHAMBRA	1.9 TDi	ANU, ASZ, AUY	06/2000 ► 10/2003	**818004**	+	**509593**	**698247**	**698696**	**813200**	**813700**	135 CC	**699935**	>ch 7M-3-530000
ALHAMBRA II (2003>)	1.8 i Turbo 20V	AWC	06/2003 ► 10/2003	**818004**	+	**509593**	**698247**	**698696**	**813200**	**813700**	135 CC	**699935**	>ch 7M-4-510190
ALHAMBRA II (2003>)	2.0 i	ATM	06/2003 ► 10/2003	**818004**	+	**509593**	**698247**	**698696**	**813200**	**813700**	135 CC	**699935**	>ch 7M-4-510190
ALHAMBRA II (2003>)	1.9 TDi	ANU, ASZ, AUY	06/2003 ► 10/2003	**818004**	+	**509593**	**698247**	**698696**	**813200**	**813700**	135 CC	**699935**	>ch 7M-4-510190
ALTEA	1.4 i	BXW	05/2006 ►	**817777**	+	**509790**	**698800**	**698801**	**699357**		120 CC	**699935**	PA/ CA LHD only
ALTEA	1.6 i	BGU, BSE, BSF	03/2004 ►	**817777**	+	**509790**	**698800**	**698801**	**699357**		120 CC	**699935**	PA/ CA LHD only
ALTEA	1.8 TFSi 16V	BYT	10/2006 ►	**817777**	+	**509790**	**698800**	**698801**	**699357**		120 CC	**699935**	PA/ CA LHD only
ALTEA	2.0 FSi 16V	BLR, BLY, BVY, BVZ	05/2004 ► 11/2005	**817777**	+	**509790**	**698800**	**698801**	**699357**		120 CC	**699935**	PA/ CA LHD only
ALTEA	2.0 TFSi 16V	BWA	05/2006 ►	**817777**	+	**509790**	**698800**	**698801**	**699357**		120 CC	**699935**	PA/ CA LHD only
ALTEA	1.9 TDi, 1.9 TDi 16V	BJB, BKC, BLS, BMN	04/2004 ►	**817777**	+	**509790**	**698800**	**698801**	**699357**		120 CC	**699935**	>ch 5P-6-046000/ PA/CA LHD only
ALTEA	1.9 TDi	BXE	02/2006 ► 05/2006	**817777**	+	**509790**	**698800**	**698801**	**699357**		120 CC	**699935**	PA/ CA LHD only
ALTEA	2.0 TDi 16V	AZV, BKD, BMM	03/2004 ►	**817777**	+	**509790**	**698800**	**698801**	**699357**		120 CC	**699935**	PA/ CA LHD only
CORDOBA (96>99)	1.0 i	AER	06/1997 ► 04/1999	**816908**		**508607**	**698159**	**698686**	**699115**	**699615**	135 CC	**699935**	
CORDOBA (96>99)	1.4 i	AEX, AKV, ANX, APQ	07/1996 ► 04/1999	**816908**		**508607**	**698159**	**698686**	**699115**	**699615**	135 CC	**699935**	
CORDOBA (96>99)	1.4 i 16V	AFH	06/1997 ► 04/1999	**816908**		**508607**	**698159**	**698686**	**699115**	**699615**	135 CC	**699935**	
CORDOBA (96>99)	1.6 i	AEE, ALM	07/1996 ► 04/1999	**816908**		**508607**	**698159**	**698686**	**699115**	**699615**	135 CC	**699935**	
CORDOBA (96>99)	1.6 i	1F, AFT	07/1996 ► 04/1999	**816908**		**508607**	**698159**	**698686**	**699115**	**699615**	135 CC	**699935**	
CORDOBA (96>99)	1.8 i	ACC, ADZ	07/1996 ► 04/1999	**816908**		**508607**	**698159**	**698686**	**699115**	**699615**	135 CC	**699935**	
CORDOBA (96>99)	1.8 i	ACC, ADZ	07/1996 ► 04/1999	**816908**		**508607**	**698159**	**698686**	**699115**	**699615**	135 CC	**699935**	
CORDOBA (96>99)	2.0 i, 2.0 i 16V	AGG, ABF	07/1996 ► 04/1999	**816908**		**508607**	**698159**	**698686**	**699115**	**699615**	135 CC	**699935**	
CORDOBA (96>99)	2.0 i, 2.0 i 16V	AGG, ABF	07/1996 ► 04/1999	**816908**		**508607**	**698159**	**698686**	**699115**	**699615**	135 CC	**699935**	
CORDOBA (96>99)	1.9 D	1Y	07/1996 ► 04/1999	**816908**		**508607**	**698159**	**698686**	**699115**	**699615**	135 CC	**699935**	>ch 6K-W-089497
CORDOBA (96>99)	1.9 D	1Y	07/1996 ► 04/1999	**816908**		**508607**	**698159**	**698686**	**699115**	**699615**	135 CC	**699935**	>ch 6K-W-089497
CORDOBA (96>99)	1.9 TD	AAZ	07/1996 ► 08/1997	**816908**		**508607**	**698159**	**698686**	**699115**	**699615**	135 CC	**699935**	
CORDOBA (96>99)	1.9 TD	AAZ	07/1996 ► 08/1997	**816908**		**508607**	**698159**	**698686**	**699115**	**699615**	135 CC	**699935**	
CORDOBA (96>99)	1.9 SDi	AEY	07/1996 ► 04/1999	**816908**		**508607**	**698159**	**698686**	**699115**	**699615**	135 CC	**699935**	
CORDOBA (96>99)	1.9 SDi	AEY	07/1996 ► 04/1999	**816908**		**508607**	**698159**	**698686**	**699115**	**699615**	135 CC	**699935**	

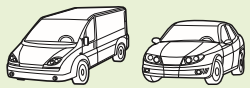

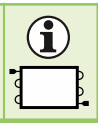

PA

CA

NEW ES

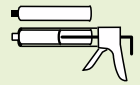

SEAT (.../...)

CORDOBA (96>99)	1.9 TDi	1Z, AFN, AHU	07/1996 ► 04/1999	**816908**		**508607**	**698159**	**698686**	**699115**	**699615**	135 CC	**699935**	
CORDOBA (99>2002)	1.0 i	ALD, ANV, AUC	08/1999 ► 08/2002	**817245**		**508811**	**698159**	**698686**	**699303**		135 CC	**699935**	ch 6K-1-242 001>ch 6K-1-242 000
CORDOBA (99>2002)	1.0 i 16V	AST, AVZ	05/2000 ► 08/2002	**817245**		**508811**	**698159**	**698686**	**699303**		135 CC	**699935**	ch 6K-1-242 001>ch 6K-1-242 000
CORDOBA (99>2002)	1.4 i	AKK, ANW, AUD	08/1999 ► 08/2002	**817245**		**508811**	**698159**	**698686**	**813200**	**813700**	135 CC	**699935**	ch 6K-1-242 001>ch 6K-1-242 000
CORDOBA (99>2002)	1.4 i 16V	APE, AQQ, AUB	05/1999 ► 08/1999	**817245**		**508811**	**698159**	**698686**	**813200**	**813700**	135 CC	**699935**	>ch 6K-X-445 000
CORDOBA (99>2002)	1.4 i 16V	APE, AQQ, AUB	09/1999 ► 08/2002	**817245**		**508811**	**698159**	**698686**	**813200**	**813700**	135 CC	**699935**	ch 6K-X-445 001>
CORDOBA (99>2002)	1.6 i	AEH, AKL, ALM, APF, AUR	05/1999 ► 08/2002	**817245**		**508811**	**698159**	**698686**	**813200**	**813700**	135 CC	**699935**	
CORDOBA (99>2002)	1.8 i Turbo 20V	AQX	12/1999 ► 08/2002	**817245**		**508811**	**698159**	**698686**	**813200**	**813700**	135 CC	**699935**	
CORDOBA (99>2002)	1.9 SDi	AGP, AQM	05/1999 ► 08/1999	**817245**		**508811**	**698159**	**698686**	**813200**	**813700**	135 CC	**699935**	ch 6K-1-242 001>ch 6K-1-242 000
CORDOBA (99>2002)	1.9 SDi	AGP, AQM	09/1999 ► 08/2002	**817245**		**508811**	**698159**	**698686**	**813200**	**813700**	135 CC	**699935**	ch 6K-X-445 001>
CORDOBA (99>2002)	1.9 TDi	AGR, ALH, ASV	03/1999 ► 08/1999	**817245**		**508811**	**698159**	**698686**	**813200**	**813700**	135 CC	**699935**	>ch 6K-X-445 000
CORDOBA (99>2002)	1.9 TDi	AGR, ALH, ASV	09/1999 ► 08/2002	**817245**		**508811**	**698159**	**698686**	**813200**	**813700**	135 CC	**699935**	ch 6K-X-445 001>
IBIZA (93>99)	1.4 i 16V	AFH	06/1997 ► 01/1999	**816908**			**698159**	**698686**	**699115**	**699615**	135 CC	**699935**	
IBIZA (93>99)	1.6 i	ABU, AEE, ALM	09/1993 ► 01/1999	**816908**		**508607**	**698159**	**698686**	**699115**	**699615**	135 CC	**699935**	
IBIZA (93>99)	1.6 i	1F, ABU, AEE, AFT, ALM	09/1993 ► 01/1999	**816908**		**508607**	**698159**	**698686**	**699115**	**699615**	135 CC	**699935**	
IBIZA (93>99)	1.8 i	ABS, ACC, ADZ	02/1993 ► 01/1999	**816908**		**508607**	**698159**	**698686**	**699115**	**699615**	135 CC	**699935**	
IBIZA (93>99)	1.8 i	ABS, ACC, ADZ	10/1995 ► 01/1999	**816908**		**508607**	**698159**	**698686**	**699115**	**699615**	135 CC	**699935**	ch 6K-TR085273>
IBIZA (93>99)	1.8 i 16V	ADL	02/1994 ► 06/1996	**816908**		**508607**	**698159**	**698686**					
IBIZA (93>99)	1.8 i 16V	ADL	10/1995 ► 06/1996	**816908**		**508607**	**698159**	**698686**	**699115**	**699615**	135 CC	**699935**	ch 6K-TR085273>
IBIZA (93>99)	2.0 i	2E, AGG	02/1993 ► 01/1999	**816908**		**508607**	**698159**	**698686**	**699115**	**699615**	135 CC	**699935**	
IBIZA (93>99)	2.0 i	2E	10/1995 ► 06/1996	**816908**		**508607**	**698159**	**698686**		**699698**			ch 6K-TR085273>
IBIZA (93>99)	2.0 i 16V	ABF	07/1996 ► 01/1999	**816908**		**508607**	**698159**	**698686**	**699115**	**699615**	135 CC	**699935**	
IBIZA (93>99)	2.0 i 16V	ABF	07/1996 ► 01/1999	**816908**		**508607**	**698159**	**698686**	**699115**	**699615**	135 CC	**699935**	
IBIZA (93>99)	1.9 D	1Y	02/1993 ► 01/1999	**816908**		**508607**	**698159**	**698686**	**699115**	**699615**	135 CC	**699935**	
IBIZA (93>99)	1.9 D	1Y	10/1995 ► 01/1999	**816908**		**508607**	**698159**	**698686**	**699115**	**699615**	135 CC	**699935**	ch 6K-TR085273>
IBIZA (93>99)	1.9 SDI	AEY	09/1995 ► 06/1996	**816908**		**508607**	**698159**	**698686**		**699698**			
IBIZA (93>99)	1.9 TD	AAZ	02/1993 ► 01/1999	**816908**		**508607**	**698159**	**698686**	**699115**	**699615**	135 CC	**699935**	

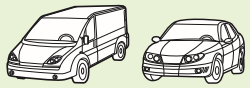

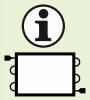

PA | CA | NEW | ES

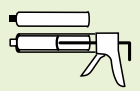

SEAT (.../...)

IBIZA (93>99)	1.9 TD	AAZ	10/1995 ► 06/1996	**816908**		**508607**	**698159**	**698686**		**699698**			ch 6K-TR085273>
IBIZA (93>99)	1.9 TDi	1Z, AFN, AHU	07/1996 ► 01/1999	**816908**		**508607**	**698159**	**698686**	**699115**	**699615**	135 CC	**699935**	
IBIZA (99>2001)	1.0 i	ALD, ANV, AUC	08/1999 ► 11/2001	**817245**		**508811**	**698159**	**698686**	**699303**		135 CC	**699935**	
IBIZA (99>2001)	1.0 i 16V	AST, AVZ	05/2000 ► 11/2001	**817245**		**508811**	**698159**	**698686**	**699303**		135 CC	**699935**	
IBIZA (99>2001)	1.4 i	AKK, ANW	08/1999 ► 09/1999	**817245**		**508811**	**698159**	**698686**	**813200**	**813700**	135 CC	**699935**	>ch 6K-Y-006 268
IBIZA (99>2001)	1.4 i	AKK, ANW, AUD	09/1999 ► 11/2001	**817245**		**508811**	**698159**	**698686**	**813200**	**813700**	135 CC	**699935**	ch 6K-Y-006 269>
IBIZA (99>2001)	1.4 i 16V	APE	09/1999 ► 09/1999	**817245**		**508811**	**698159**	**698686**	**813200**	**813700**	135 CC	**699935**	>ch 6K-Y-006 268
IBIZA (99>2001)	1.4 i 16V	APE, AQQ, AUA, AUB	09/1999 ► 11/2001	**817245**		**508811**	**698159**	**698686**	**813200**	**813700**	135 CC	**699935**	ch 6K-Y-006 269>
IBIZA (99>2001)	1.6 i	AEH, AKL, ALM, APF, AUR	06/1999 ► 09/1999	**817245**		**508811**	**698159**	**698686**	**813200**	**813700**	135 CC	**699935**	>ch 6K-Y-006 268
IBIZA (99>2001)	1.6 i	AEH, AKL, ALM, APF, AUR	09/1999 ► 11/2001	**817245**		**508811**	**698159**	**698686**	**813200**	**813700**	135 CC	**699935**	ch 6K-Y-006 269>
IBIZA (99>2001)	1.8 i Turbo 20V	AQX, AYP	12/1999 ► 11/2001	**817245**		**508811**	**698159**	**698686**	**813200**	**813700**	135 CC	**699935**	ch 6K-Y-006 269>
IBIZA (99>2001)	1.9 SDi	AGP, AQM	04/1999 ► 09/1999	**817245**		**508811**	**698159**	**698686**	**813200**	**813700**	135 CC	**699935**	>ch 6K-Y-006 268
IBIZA (99>2001)	1.9 SDi	AGP, AQM	09/1999 ► 11/2001	**817245**		**508811**	**698159**	**698686**	**813200**	**813700**	135 CC	**699935**	ch 6K-Y-006 269>
IBIZA (99>2001)	1.9 TDi	AGR, ASV	03/1999 ► 09/1999	**817245**		**508811**	**698159**	**698686**	**813200**	**813700**	135 CC	**699935**	>ch 6K-Y-006 268
IBIZA (99>2001)	1.9 TDi	AGR, ALH, ASV	09/1999 ► 11/2001	**817245**		**508811**	**698159**	**698686**	**813200**	**813700**	135 CC	**699935**	ch 6K-Y-006 269>
IBIZA (2001>)	1.2 i 12V	AZQ, BME	11/2001 ► 04/2004	**817686**	+	**509594**	**698685**	**698739**	**699383**		160 CC	**699935**	ch 6L-5-005 001>
IBIZA (2001>)	1.4 i 16V	AUB, BBY, BBZ, BKY	09/2001 ►	**817686**	+	**509594**	**698685**	**698739**	**699383**		160 CC	**699935**	ch 6L-5-005 001>ch 6L-4-R234 600
IBIZA (2001>)	1.6 i	BAH	04/2003 ►	**817686**	+	**509594**	**698685**	**698739**	**699383**		160 CC	**699935**	ch 6L-5-005 001>ch 6L-5-005 000
IBIZA (2001>)	1.8 i Turbo 20V	BBU, BJX	12/2003 ►	**817686**	+	**509594**	**698685**	**698739**	**699383**		160 CC	**699935**	ch 6L-5-005 001>ch 6L-5-005 000
IBIZA (2001>)	2.0 i	AZL, BBX	07/2002 ►	**817686**	+	**509594**	**698685**	**698739**	**699383**		160 CC	**699935**	
IBIZA (2001>)	1.4 TDi	AMF, BMS, BNM, BNV	05/2002 ►	**817686**	+	**509594**	**698685**	**698739**	**699383**		160 CC	**699935**	ch 6L-5-005 001>ch 6L-5-005 000
IBIZA (2001>)	1.9 SDi	ASY	01/2002 ► 04/2004	**817686**	+	**509594**	**698685**	**698739**	**699383**		160 CC	**699935**	ch 6L-5-005 001>ch 6L-5-005 000
IBIZA (2001>)	1.9 TDi	ASZ, ATD	09/2001 ► 07/2002	**817686**	+	**509594**	**698685**	**698739**	**699383**		160 CC	**699935**	ch 6L-3-044 032>ch 6L-3-044 431
IBIZA (2001>)	1.9 TDi Cupra R	BPX	12/2003 ►	**817686**	+	**509594**	**698685**	**698739**	**699383**		160 CC	**699935**	ch 6L-5-005 001>ch 6L-5-005 000
LEON	1.4 i 16V	AHW, APE, AXP, BCA	11/1999 ► 04/2004	**817244**		**508811**	**698159**	**698716**	**813200**	**813700**	135 CC	**699935**	
LEON	1.6 i	AEH, AKL	11/1999 ► 04/2004	**817244**		**508811**	**698159**	**698716**	**813200**	**813700**	135 CC	**699935**	
LEON	1.6 i 16V	AUS, AZD, BCB	06/2000 ►	**817244**		**508811**	**698159**	**698716**	**813200**	**813700**	135 CC	**699935**	

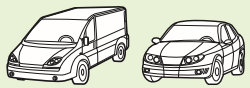

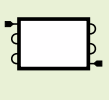

PA

CA

NEW

ES

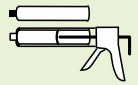

SEAT (.../...)

LEON	1.8 i 20V	AGN, APG	11/1999 ► 12/2003	**817244**		**508811**	**698159**	**698716**	**813200**	**813700**	135 CC	**699935**	
LEON	1.8 i Turbo 20V	AJQ, APP, ARY, AUQ	11/1999 ►	**817244**		**508811**	**698159**	**698716**	**813200**	**813700**	135 CC	**699935**	
LEON	1.8 i Turbo 20V	AMK, BAM	05/2002 ►	**817244**		**508811**	**698159**	**698716**	**813200**	**813700**	135 CC	**699935**	
LEON	1.9 SDi	AQM	06/2000 ► 10/2003	**817244**		**508811**	**698159**	**698716**	**813200**	**813700**	135 CC	**699935**	
LEON	1.9 TDi	AGR, ALH, ASV	11/1999 ►	**817244**		**508811**	**698159**	**698716**	**813200**	**813700**	135 CC	**699935**	
LEON	1.9 TDi	AHF	11/1999 ► 09/2000	**817244**		**508811**	**698159**	**698716**	**813200**	**813700**	135 CC	**699935**	
LEON	1.9 TDi	ASZ	05/2003 ► 04/2004	**817244**		**508811**	**698159**	**698716**	**813200**	**813700**	135 CC	**699935**	
LEON II	1.6 i	BGU, BSE, BSF	07/2005 ►	**817777**	+	**509790**	**698800 (-)**	**698801 (+)**	**699357**		120 CC	**699935**	PA/ CA LHD only
LEON II	2.0 FSi 16V	BLR, BLY, BVY, BVZ	07/2005 ►	**817777**	+	**509790**	**698800 (-)**	**698801 (+)**	**699357**		120 CC	**699935**	PA/ CA LHD only
LEON II	2.0 TFSi 16V	BWA	11/2005 ►	**817777**	+	**509790**	**698800 (-)**	**698801 (+)**	**699357**		120 CC	**699935**	PA/ CA LHD only
LEON II	1.9 TDi	BKC, BLS	07/2005 ►	**817777**	+	**509790**	**698800 (-)**	**698801 (+)**	**699357**		120 CC	**699935**	PA/ CA LHD only
LEON II	2.0 TDi 16V	AZV, BKD, BMM	07/2005 ►	**817777**	+	**509790**	**698800 (-)**	**698801 (+)**	**699357**		120 CC	**699935**	PA/ CA LHD only
TOLEDO (98>)	1.4 i 16V	AHW, AXP	01/2000 ► 05/2002	**817244**		**508811**	**698159**	**698686**	**813200**	**813700**	135 CC	**699935**	
TOLEDO (98>)	1.6 i	AEH, AKL	10/1998 ► 07/2004	**817244**		**508811**	**698159**	**698686**	**813200**	**813700**	135 CC	**699935**	>ch 1M-XB035 000
TOLEDO (98>)	1.6 i 16V	AUS, AZD	06/2000 ► 04/2001	**817244**		**508811**	**698159**	**698686**	**813200**	**813700**	135 CC	**699935**	
TOLEDO (98>)	1.6 i 16V	BCB	04/2002 ► 07/2004	**817244**		**508811**	**698159**	**698686**	**813200**	**813700**	135 CC	**699935**	
TOLEDO (98>)	1.8 i 20V	AGN, APG	10/1998 ► 07/2004	**817244**		**508811**	**698159**	**698686**	**813200**	**813700**	135 CC	**699935**	
TOLEDO (98>)	1.8 i 20V	AGN, APG, AUQ	05/2001 ► 07/2004	**817244**		**508811**	**698159**	**698686**	**813200**	**813700**	135 CC	**699935**	
TOLEDO (98>)	1.9 TDi	AGR, AHF, ALH, ASV, ASZ	10/1998 ► 07/2004	**817244**		**508811**	**698159**	**698686**	**813200**	**813700**	135 CC	**699935**	
TOLEDO (2004>)	1.6 i	BGU, BSE, BSF	09/2004 ►	**817777**	+	**509790**		**715665**	**699357**		120 CC	**699935**	RHD
TOLEDO (2004>)	1.6 i	BGU, BSE, BSF	09/2004 ►	**817777**	+	**509790**	**698800**		**699357**		120 CC	**699935**	
TOLEDO (2004>)	2.0 FSi 16V	BLR, BLY	09/2004 ►	**817777**	+	**509790**		**715665**	**699357**		120 CC	**699935**	RHD
TOLEDO (2004>)	2.0 FSi 16V	BLR, BLY	09/2004 ►	**817777**	+	**509790**	**698800**		**699357**		120 CC	**699935**	
TOLEDO (2004>)	2.0 TFSi 16V	BWA	05/2006 ►	**817777**	+	**509790**		**715665**	**699357**		120 CC	**699935**	RHD
TOLEDO (2004>)	2.0 TFSi 16V	BWA	05/2006 ►	**817777**	+	**509790**	**698800**		**699357**		120 CC	**699935**	
TOLEDO (2004>)	2.0 TDi 16V	AZV, BKD, BMM	09/2004 ►	**817777**	+	**509790**		**715665**	**699357**		120 CC	**699935**	RHD
TOLEDO (2004>)	2.0 TDi 16V	AZV, BKD, BMM	09/2004 ►	**817777**	+	**509790**	**698800**		**699357**		120 CC	**699935**	

							PA	CA	NEW	ES			
SEAT (.../...)													
TOLEDO (2004>)	1.9 TDi	BJB, BKC	09/2004 ►	**817777**	+	**509790**		**715665**	**699357**		120 CC	**699935**	RHD
TOLEDO (2004>)	1.9 TDi	BJB, BKC	09/2004 ►	**817777**	+	**509790**	**698800**		**699357**		120 CC	**699935**	
SKODA													
FABIA	1.0 i	AQV, ARV	10/2000 ► 08/2002	**817686**	+	**509594**	**698685**	**698739**	**699383**		160 CC	**699935**	
FABIA	1.2 i 6V	AWY	08/2002 ► 05/2004	**817686**	+	**509594**	**698685**	**698739**	**699383**		160 CC	**699935**	
FABIA	1.2 i 12V	BME-E4	08/2002 ► 11/2005	**817686**	+	**509594**	**698685**	**698739**	**699383**		160 CC	**699935**	
FABIA	1.2 i	AZQ, BMD	02/2003 ► 11/2004	**817686**	+	**509594**	**698685**	**698739**	**699383**		160 CC	**699935**	
FABIA	1.4 i	AME, AQW, ATZ, AZE, AZF	08/1999 ► 05/2003	**817686**	+	**509594**	**698685**	**698739**	**699383**		160 CC	**699935**	
FABIA	1.4 i 16V	AUA, AUB, BBY, BBZ, BKY	10/1999 ► 05/2004	**817686**	+	**509594**	**698685**	**698739**	**699383**		160 CC	**699935**	
FABIA	2.0 i	AZL	07/2000 ►	**817686**	+	**509594**	**698685**	**698739**	**699383**		160 CC	**699935**	
FABIA	1.4 TDi	AMF	08/2002 ►	**817686**	+	**509594**	**698685**	**698739**	**699383**		160 CC	**699935**	
FABIA	1.9 SDi	ASY	10/1999 ► 07/2002		+	**509594**	**698685**	**698739**	**699383**		160 CC	**699935**	
FABIA	1.9 SDi	ASY	08/2002 ►	**817686**	+	**509594**	**698685**	**698739**	**699383**		160 CC	**699935**	
FABIA	1.9 TDi	ASZ, ATD	01/2000 ►	**817686**	+	**509594**	**698685**	**698739**	**699383**		160 CC	**699935**	
OCTAVIA (96>2000)	1.4 i	AMD	02/1999 ► 07/2000	**817244**		**508811**	**698159**	**698686**	**813200**	**813700**	135 CC	**699935**	
OCTAVIA (96>2000)	1.6 i	AEE	10/1996 ► 07/2000	**817244**		**508811**	**698159**	**698686**	**813200**	**813700**	135 CC	**699935**	
OCTAVIA (96>2000)	1.6 i	AEH	02/1997 ► 07/2000	**817244**		**508811**	**698159**	**698686**	**813200**	**813700**	135 CC	**699935**	
OCTAVIA (96>2000)	1.8 i 20V	AGN, AGU, ARZ	10/1996 ► 07/2000	**817244**		**508811**	**698159**	**698686**	**813200**	**813700**	135 CC	**699935**	
OCTAVIA (96>2000)	2.0 i	APK, AQY	05/1999 ► 07/2000	**817244**		**508811**	**698159**	**698686**	**813200**	**813700**	135 CC	**699935**	
OCTAVIA (96>2000)	1.9 SDi	AGP	05/1997 ► 07/2000	**817244**		**508811**	**698159**	**698686**	**813200**	**813700**	135 CC	**699935**	
OCTAVIA (96>2000)	1.9 TDi	AGR, AHF, ASV	10/1996 ► 07/2000	**817244**		**508811**	**698159**	**698686**	**813200**	**813700**	135 CC	**699935**	
OCTAVIA (2000>2004)	1.4 i	AMD	08/2000 ► 03/2001	**817244**		**508811**	**698159**	**698686**	**813200**	**813700**	135 CC	**699935**	
OCTAVIA (2000>2004)	1.4 i 16V	AXP, BCA	08/2000 ► 09/2004	**817244**		**508811**	**698159**	**698686**	**813200**	**813700**	135 CC	**699935**	
OCTAVIA (2000>2004)	1.6 i	AEE	08/2000 ► 09/2004	**817244**		**508811**	**698159**	**698686**	**813200**	**813700**	135 CC	**699935**	
OCTAVIA (2000>2004)	1.6 i	AEH, AKL, AVU, BFQ	08/2000 ► 09/2004	**817244**		**508811**	**698159**	**698686**	**813200**	**813700**	135 CC	**699935**	
OCTAVIA (2000>2004)	1.8 i Turbo 20V	AGU, ARX, AUM, AUQ	08/2000 ►	**817244**		**508811**	**698159**	**698686**	**813200**	**813700**	135 CC	**699935**	
OCTAVIA (2000>2004)	2.0 i	AEG, APK, AQY, AZJ	08/2000 ► 09/2004	**817244**		**508811**	**698159**	**698686**	**813200**	**813700**	135 CC	**699935**	

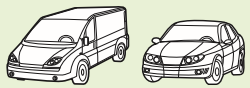

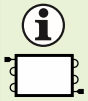

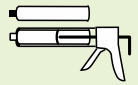

							PA	CA	NEW	ES			
SKODA (.../...)													
OCTAVIA (2000>2004)	1.9 D	AQM	08/2000 ► 12/2003	**817244**		**508811**	**698159**	**698686**	**813200**	**813700**	135 CC	**699935**	
OCTAVIA (2000>2004)	1.9 TDi	ASZ	09/2002 ► 09/2004	**817244**		**508811**	**698159**	**698686**	**813200**	**813700**	135 CC	**699935**	
OCTAVIA (2000>2004)	1.9 TDi	AGR, AHF, ALH, ASV	08/2000 ► 09/2004	**817244**		**508811**	**698159**	**698686**	**813200**	**813700**	135 CC	**699935**	
OCTAVIA (2004>)	1.4 i 16V	BCA	05/2004 ►	**817777**	+	**509790**		**715665**	**699357**		120 CC	**699935**	RHD
OCTAVIA (2004>)	1.4 i 16V	BCA	05/2004 ►	**817777**	+	**509790**	**698800**	**698801**	**699357**		120 CC	**699935**	
OCTAVIA (2004>)	1.6 FSi 16V	BLF	05/2004 ►	**817777**	+	**509790**		**715665**	**699357**		120 CC	**699935**	RHD
OCTAVIA (2004>)	1.6 FSi 16V	BLF	05/2004 ►	**817777**	+	**509790**	**698800**	**698801**	**699357**		120 CC	**699935**	
OCTAVIA (2004>)	1.6 i	BGU, BSE, BSF	05/2004 ►	**817777**	+	**509790**		**715665**	**699357**		120 CC	**699935**	RHD
OCTAVIA (2004>)	1.6 i	BGU, BSE, BSF	05/2004 ►	**817777**	+	**509790**	**698800**	**698801**	**699357**		120 CC	**699935**	
OCTAVIA (2004>)	2.0 FSi 16V	BLR, BLY, BLX	11/2004 ► 11/2005	**817777**	+	**509790**		**715665**					RHD
OCTAVIA (2004>)	2.0 FSi 16V	BLR, BLY, BLX	11/2004 ► 11/2005	**817777**	+	**509790**	**698800**	**698801**					
OCTAVIA (2004>)	2.0 FSi 16V	BVY, BVZ, BVX	11/2005 ►	**817777**	+	**509790**		**715665**	**699357**		120 CC	**699935**	RHD
OCTAVIA (2004>)	2.0 FSi 16V	BVY, BVZ, BVX	11/2005 ►	**817777**	+	**509790**	**698800**	**698801**	**699357**		120 CC	**699935**	
OCTAVIA (2004>)	1.9 TDi	BJB, BKC, BLS	05/2004 ►	**817777**	+	**509790**		**715665**	**699357**		120 CC	**699935**	RHD
OCTAVIA (2004>)	1.9 TDi	BJB, BKC, BLS	05/2004 ►	**817777**	+	**509790**	**698800**	**698801**	**699357**		120 CC	**699935**	
OCTAVIA (2004>)	2.0 TDi 16V	AZV, BKD, BMM	05/2004 ►	**817777**	+	**509790**		**715665**	**699357**		120 CC	**699935**	Sanden / RHD
OCTAVIA (2004>)	2.0 TDi 16V	AZV, BKD, BMM	05/2004 ►	**817777**	+	**509790**		**715665**	**699357**		120 CC	**699935**	Zexel / RHD
OCTAVIA (2004>)	2.0 TDi 16V	AZV, BKD, BMM	05/2004 ►	**817777**	+	**509790**	**698800**	**698801**	**699357**		120 CC	**699935**	Sanden
OCTAVIA (2004>)	2.0 TDi 16V	AZV, BKD, BMM	05/2004 ►	**817777**	+	**509790**	**698800**	**698801**	**699357**		120 CC	**699935**	Zexel
OCTAVIA (2004>)	2.0 TFSi 16V	BWA	10/2005 ►	**817777**	+	**509790**		**715665**	**699357**		120 CC	**699935**	RHD
OCTAVIA (2004>)	2.0 TFSi 16V	BWA	10/2005 ►	**817777**	+	**509790**	**698800**	**698801**	**699357**		120 CC	**699935**	
TOYOTA													
YARIS	1.0 i 16V	1SZ-FE	01/2001 ►	**817674**		**509794**	**698796**	**715619**			100 CC	**699935**	
YARIS (NCP/SCP) JPP	1.0 i 16V	1SZ-FE	03/1999 ► 12/2002	**817674**		**509794**	**698681**	**715650**			100 CC	**699935**	
YARIS (NCP/SCP) JPP	1.3 i 16V	2NZ-FE	06/1999 ► 12/2002	**817674**		**509794**	**698681**	**715650**			100 CC	**699935**	
VAUXHALL													
ASTRA IV (98>)	1.2 i 16V	X12XE	02/1998 ► 12/2001	**817505**	+		**698662**	**698709**		**699749**			>ch 12999999 / RHD

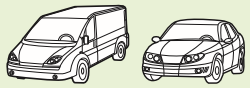

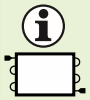

PA | CA | NEW | ES

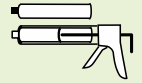

VAUXHALL (.../...)

ASTRA IV (98>)	1.2 i 16V	X12XE	02/1998 ► 12/2001	**817505**	+		**698663**	**698708**		**699749**			>ch 12999999 / RHD
ASTRA IV (98>)	1.2 i 16V	X12XE	01/2002 ► 02/2004	**818047**	+		**698662**	**698709**					>ch VW6116025 / RHD
ASTRA IV (98>)	1.2 i 16V	Z12XE	01/2002 ►	**818047**	+	**509691**	**698662**	**698709**					ch 22000001> / RHD
ASTRA IV (98>)	1.2 i 16V	X12XE	01/2002 ► 02/2004	**818047**	+		**698663**	**698708**					>ch VW6116025 / RHD
ASTRA IV (98>)	1.2 i 16V	Z12XE	01/2002 ►	**818047**	+	**509691**	**698663**	**698708**					ch 22000001> / RHD
ASTRA IV (98>)	1.4 i 16V	Z14XE	02/1998 ► 12/2001	**817505**	+		**698662**	**698709**	**699270**	**699770**	150 CC	**699937**	>ch 12999999 / RHD
ASTRA IV (98>)	1.4 i 16V	X14XE	02/1998 ► 12/2001	**817505**	+		**698662**	**698709**	**699250**	**699750**	150 CC	**699937**	>ch 12999999 / RHD
ASTRA IV (98>)	1.4 i 16V	Z14XE	02/1998 ► 12/2001	**817505**	+		**698663**	**698708**	**699270**	**699770**	150 CC	**699937**	>ch 12999999 / RHD
ASTRA IV (98>)	1.4 i 16V	X14XE	02/1998 ► 12/2001	**817505**	+		**698663**	**698708**	**699250**	**699750**	150 CC	**699937**	>ch 12999999 / RHD
ASTRA IV (98>)	1.4 i 16V	Z14XE	01/2002 ►	**818047**	+	**509691**	**698662**	**698709**	**699270**	**699770**	150 CC	**699937**	ch 22000001> / RHD
ASTRA IV (98>)	1.4 i 16V	X14XE	01/2002 ►			**509400**	**698662**	**698709**	**699250**	**699750**	150 CC	**699937**	>ch 12999999 / RHD
ASTRA IV (98>)	1.4 i 16V	Z14XE	01/2002 ►	**818047**	+	**509691**	**698663**	**698708**	**699270**	**699770**	150 CC	**699937**	ch 22000001> / RHD
ASTRA IV (98>)	1.4 i 16V	X14XE	01/2002 ►			**509400**	**698663**	**698708**	**699250**	**699750**	150 CC	**699937**	>ch 12999999 / RHD
ASTRA IV (98>)	1.6 i	X16SZR	02/1998 ► 09/2000	**817505**	+		**698662**	**698709**	**699250**	**699750**	150 CC	**699937**	>ch 12999999 / RHD
ASTRA IV (98>)	1.6 i	X16SZR	02/1998 ► 09/2000	**817505**	+		**698663**	**698708**	**699250**	**699750**	150 CC	**699937**	>ch 12999999 / RHD
ASTRA IV (98>)	1.6 i	Z16SE/E4	09/2000 ► 12/2001	**817505**	+		**698662**	**698709**	**699270**	**699770**	150 CC	**699937**	>ch 22271936 / RHD
ASTRA IV (98>)	1.6 i	Z16SE/E4	09/2000 ► 12/2001	**817505**	+		**698663**	**698708**	**699270**	**699770**	150 CC	**699937**	>ch 22271936 / RHD
ASTRA IV (98>)	1.6 i	X16SZR	10/2000 ► 12/2001	**817505**	+		**698662**	**698709**					>ch 12999999 / RHD
ASTRA IV (98>)	1.6 i	X16SZR	10/2000 ► 12/2001	**817505**	+		**698663**	**698708**					>ch 12999999 / RHD
ASTRA IV (98>)	1.6 i	Z16SE/E4	01/2002 ►	**818047**	+	**509691**	**698662**	**698709**	**699270**	**699770**	150 CC	**699937**	>ch 22271936 / RHD
ASTRA IV (98>)	1.6 i	Z16SE/E4	01/2002 ►	**818047**	+	**509691**	**698663**	**698708**	**699270**	**699770**	150 CC	**699937**	>ch 22271936 / RHD
ASTRA IV (98>)	1.6 i	C16SEL	12/2002 ►	**818047**	+	**509691**	**698662**	**698709**	**699250**	**699750**	150 CC	**699937**	RHD
ASTRA IV (98>)	1.6 i	C16SEL	12/2002 ►	**818047**	+	**509691**	**698663**	**698708**	**699250**	**699750**	150 CC	**699937**	RHD
ASTRA IV (98>)	1.6 i 16V	X16XEL	02/1998 ► 12/2001	**817505**	+		**698662**	**698709**	**699250**	**699750**	150 CC	**699937**	>ch 12999999 / RHD
ASTRA IV (98>)	1.6 i 16V	Z16XE	02/1998 ► 12/2001	**817505**	+		**698662**	**698709**	**699270**	**699770**	150 CC	**699937**	>ch 12999999 / RHD
ASTRA IV (98>)	1.6 i 16V	X16XEL	02/1998 ► 12/2001	**817505**	+		**698663**	**698708**	**699250**	**699750**	150 CC	**699937**	>ch 12999999 / RHD
ASTRA IV (98>)	1.6 i 16V	Z16XE	02/1998 ► 12/2001	**817505**	+		**698663**	**698708**	**699270**	**699770**	150 CC	**699937**	>ch 12999999 / RHD

VAUXHALL (.../...)

								PA	CA	NEW	ES			
ASTRA IV (98>)	1.6 i 16V	Z16XE	01/2002 ►	**818047**	+▯	**509691**		**698662**	**698709**	**699270**	**699770**	150 CC	**699937**	ch 22000001> / RHD
ASTRA IV (98>)	1.6 i 16V	Z16XE	01/2002 ►	**818047**	+▯	**509691**		**698663**	**698708**	**699270**	**699770**	150 CC	**699937**	ch 22000001> / RHD
ASTRA IV (98>)	1.8 i 16V	X18XE1	02/1998 ► 12/2001	**817505**	+▯			**698662**	**698709**	**699250**	**699750**	150 CC	**699937**	>ch 12999999 / RHD
ASTRA IV (98>)	1.8 i 16V	X18XE1	02/1998 ► 12/2001	**817505**	+▯			**698663**	**698708**	**699250**	**699750**	150 CC	**699937**	>ch 12999999 / RHD
ASTRA IV (98>)	1.8 i 16V	Z18XE	09/2000 ► 12/2001	**817505**	+▯			**698662**	**698709**	**699270**	**699770**	150 CC	**699937**	>ch 12999999 / RHD
ASTRA IV (98>)	1.8 i 16V	Z18XE	09/2000 ► 12/2001	**817505**	+▯			**698663**	**698708**	**699270**	**699770**	150 CC	**699937**	>ch 12999999 / RHD
ASTRA IV (98>)	1.8 i 16V	X18XE1	01/2002 ►			**509400**		**698662**	**698709**	**699250**	**699750**	150 CC	**699937**	>ch 12999999 / RHD
ASTRA IV (98>)	1.8 i 16V	Z18XE	01/2002 ►	**818047**	+▯	**509691**		**698662**	**698709**	**699270**	**699770**	150 CC	**699937**	>ch 42009015 / RHD
ASTRA IV (98>)	1.8 i 16V	X18XE1	01/2002 ►			**509400**		**698663**	**698708**	**699250**	**699750**	150 CC	**699937**	>ch 12999999 / RHD
ASTRA IV (98>)	1.8 i 16V	Z18XE	01/2002 ►	**818047**	+▯	**509691**		**698663**	**698708**	**699270**	**699770**	150 CC	**699937**	>ch 42009015 / RHD
ASTRA IV (98>)	2.0 i 16V	X20XEV	02/1998 ► 12/1999	**817505**	+▯			**698662**	**698709**	**699250**	**699750**	150 CC	**699937**	>ch VV6116025 / RHD
ASTRA IV (98>)	2.0 i 16V	X20XEV	02/1998 ► 12/1999	**817505**	+▯			**698663**	**698708**	**699250**	**699750**	150 CC	**699937**	>ch VV6116025 / RHD
ASTRA IV (98>)	2.0 i Turbo 16V	Z20LER	01/2002 ►	**817505**	+▯			**698662**	**698709**	**699270**	**699770**	150 CC	**699937**	ch 22007680> / RHD
ASTRA IV (98>)	2.0 i Turbo 16V	Z20LER	01/2002 ►	**817505**	+▯			**698663**	**698708**	**699270**	**699770**	150 CC	**699937**	ch 22007680> / RHD
ASTRA IV (98>)	2.2 i 16V	Z22SE	10/1999 ► 12/2001	**817505**	+▯			**698662**	**698709**	**699307**	**699807**	120 CC	**699935**	>ch 12999999 / RHD
ASTRA IV (98>)	2.2 i 16V	Z22SE	10/1999 ► 12/2001	**817505**	+▯			**698663**	**698708**	**699307**	**699807**	120 CC	**699935**	>ch 12999999 / RHD
ASTRA IV (98>)	2.2 i 16V	Z22SE	01/2002 ►	**818047**	+▯	**509691**		**698662**	**698709**	**699307**	**699807**	120 CC	**699935**	ch 22000001> / RHD
ASTRA IV (98>)	2.2 i 16V	Z22SE	01/2002 ►	**818047**	+▯	**509691**		**698663**	**698708**	**699307**	**699807**	120 CC	**699935**	ch 22000001> / RHD
ASTRA IV (98>)	1.7 TD	X17DTL	02/1998 ► 01/2002	**817506**		**509400**		**698662**	**698709**	**699251**	**699751**	150 CC	**699937**	RHD
ASTRA IV (98>)	1.7 TD	X17DTL	02/1998 ► 01/2002	**817506**		**509400**		**698663**	**698708**	**699251**	**699751**	150 CC	**699937**	RHD
ASTRA IV (98>)	1.7 DTI 16V	Y17DT	02/2000 ► 02/2004	**817506**		**509400**		**698662**	**698709**					RHD
ASTRA IV (98>)	1.7 DTI 16V	Y17DT	02/2000 ► 02/2004	**817506**		**509400**		**698663**	**698708**					RHD
ASTRA IV (98>)	2.0 Di 16V	Y20DTL	01/2002 ► 02/2004	**818047**	+▯	**509691**		**698662**	**698709**	**699308**	**699808**	150 CC	**699935**	ch 22000001> / RHD
ASTRA IV (98>)	2.0 Di 16V	Y20DTL	01/2002 ► 02/2004	**818047**	+▯	**509691**		**698663**	**698708**	**699308**	**699808**	150 CC	**699935**	ch 22000001> / RHD
ASTRA IV (98>)	2.0 Di 16V, DTi 16V	X20DTL	02/1998 ► 12/2001	**817505**	+▯			**698662**	**698709**	**699308**	**699808**			>ch VV6116025 / RHD
ASTRA IV (98>)	2.0 Di 16V, DTi 16V	X20DTL	02/1998 ► 12/2001	**817506**		**509400**		**698662**	**698709**	**699308**	**699808**			RHD
ASTRA IV (98>)	2.0 Di 16V, DTi 16V	X20DTL	02/1998 ► 12/2001	**817505**	+▯			**698663**	**698708**	**699308**	**699808**			>ch VV6116025 / RHD

VAUXHALL (.../...)

							PA	CA	NEW	ES			
ASTRA IV (98>)	2.0 Di 16V, DTi 16V	X20DTL	02/1998 ► 12/2001	**817506**		**509400**	**698663**	**698708**	**699308**	**699808**			RHD
ASTRA IV (98>)	2.0 DTi 16V	Y20DTH	08/1999 ► 02/2004	**817506**		**509400**	**698662**	**698709**	**699308**	**699808**	150 CC	**699935**	RHD
ASTRA IV (98>)	2.0 DTi 16V	Y20DTH	08/1999 ► 02/2004	**817506**		**509400**	**698663**	**698708**	**699308**	**699808**	150 CC	**699935**	RHD
ASTRA IV (98>)	2.0 DTi 16V	X20DTL	01/2002 ► 02/2004	**817506**			**698662**	**698709**	**699308**	**699808**	150 CC	**699935**	RHD
ASTRA IV (98>)	2.0 DTi 16V	X20DTL	01/2002 ► 02/2004	**817506**			**698663**	**698708**	**699308**	**699808**	150 CC	**699935**	RHD
ASTRA IV (98>)	2.2 DTI 16V	Y22DTR	10/2002 ► 02/2004	**817506**		**509400**	**698662**	**698709**	**699308**	**699808**	150 CC	**699935**	RHD
ASTRA IV (98>)	2.2 DTI 16V	Y22DTR	10/2002 ► 02/2004	**817506**		**509400**	**698663**	**698708**	**699308**	**699808**	150 CC	**699935**	RHD
CORSA I (93>2000)	1.0 i 12V	X10XE	03/1997 ► 08/2000	**816902**		**508739**	**715645 (+)**			**699748**			ch R4147617> / RHD
CORSA I (93>2000)	1.2 i, 1.2 i 16V	C12NZ, X12SZ, X12XE	03/1993 ► 08/2000	**816902**		**508739**	**715645 (+)**			**699748**			ch R4147617>ch R4147616 / RHD
CORSA I (93>2000)	1.4 i	C14NZ, C14SE, X14SZ	03/1993 ► 08/2000	**816902**		**508739**	**715645 (+)**		**699072**	**699572**	295 CC	**699937**	ch R4147617>ch R4147616 / RHD
CORSA I (93>2000)	1.4 i 16V	X14XE	07/1995 ► 08/2000	**816902**		**508739**	**715645 (+)**		**699072**	**699572**	295 CC	**699937**	ch R4147617> / RHD
CORSA I (93>2000)	1.6 i 16V	C16XE	03/1993 ► 08/2000	**816902**		**508739**	**715645 (+)**		**699072**	**699572**	295 CC	**699937**	ch R4147617>ch R4147616 / RHD
CORSA I (93>2000)	1.5 D, 1.5 TD	15D, 15TD	03/1993 ► 08/2000	**816902**		**508739**	**715645 (+)**						ch R4147617>ch R4147616 / RHD
CORSA I (93>2000)	1.7 D	17DA, X17D	03/1993 ► 08/2000	**816902**		**508739**	**715645 (+)**						ch R4147617>ch R4147616 / RHD
CORSA II (2000>2003)	1.0 i 12V	Z10XE	09/2000 ► 08/2003	**817609**	+	**509591**	**698711**	**698710**					RHD
CORSA II (2000>2003)	1.2 i 16V	Z12XE	09/2000 ► 08/2003	**817609**	+	**509591**	**698711**	**698710**					RHD
CORSA II (2000>2003)	1.4 i 16V	Z14XE	09/2000 ► 08/2003	**817609**	+	**509591**	**698711**	**698710**	**699270**	**699770**	150 CC	**699937**	RHD
CORSA II (2000>2003)	1.8 i 16V	Z18XE	09/2000 ► 08/2003	**817609**	+	**509591**	**698711**	**698710**	**699270**	**699770**	150 CC	**699937**	RHD
CORSA II (2000>2003)	1.7 DI 16V	Y17DTL	09/2000 ► 08/2003	**817610**	+	**509591**	**698711**	**698710**	**699306**	**699806**	135 CC	**699935**	RHD
CORSA II (2000>2003)	1.7 DTI 16V	Y17DT	09/2000 ► 08/2003	**818118**	+	**509591**	**698711**	**698710**	**699306**	**699806**	135 CC	**699935**	ch 34001718>ch 34001717 / RHD
CORSA II (2000>2003)	1.7 DTI 16V	Y17DT	09/2000 ► 08/2003	**817610**	+	**509591**	**698711**	**698710**	**699306**	**699806**	135 CC	**699935**	RHD
CORSA II (2003>)	1.0 i 12V	Z10XEP	01/2004 ►	**814066**	+	**509929**	**698711**	**698710**		**699893**			RHD
CORSA II (2003>)	1.2 i 16V	Z12XE	09/2004 ►	**814066**	+	**509929**	**698711**	**698710**		**699898**			RHD
CORSA II (2003>)	1.4 i 16V	Z14XEP	01/2004 ►	**814066**	+	**509929**	**698711**	**698710**		**699912**			RHD
CORSA II (2003>)	1.8 16V	Z18XE	09/2003 ► 12/2003	**817609**	+	**509929**	**698711**	**698710**	**699270**	**699770**	150 CC	**699937**	RHD
CORSA II (2003>)	1.8 16V	Z18XE	01/2004 ►	**817843**	+	**509929**	**698711**	**698710**	**699270**	**699770**	150 CC	**699937**	RHD
CORSA II (2003>)	1.7 CDTI 16V	Z17DTH	09/2003 ►	**817844**	+	**509929**	**698711**	**698710**	**699306**	**699806**	135 CC	**699935**	RHD

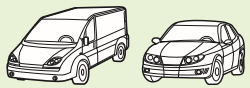

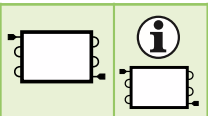

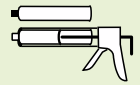

VAUXHALL (.../...)

								PA	CA	NEW	ES			
VECTRA (95>2002)	1.6 i, 1.6 i 16V	16LZ2, X16SZR, X16XEL	10/1995 ► 01/1999		+	**509564**	**698202**		**699102**	**699602**	295 CC	**699937**	RHD
VECTRA (95>2002)	1.8 i 16V	X18XE	10/1995 ► 01/1999		+	**509564**	**698202**		**699102**	**699602**	295 CC	**699937**	>ch W1999999 / RHD
VECTRA (95>2002)	2.0 i, 2.0 i 16V	20NEJ, X20XEV	10/1995 ► 01/1999		+	**509564**	**698202**		**699102**	**699602**	295 CC	**699937**	RHD
VECTRA (95>2002)	2.5 i V6 24V	X25XE-170	10/1995 ► 01/1999		+	**509564**	**698202**						>ch W1999999 / RHD
VECTRA (95>2002)	1.7 TD	X17DT	10/1995 ► 01/1999		+	**509564**	**698202**						RHD
VECTRA (95>2002)	2.0 Di 16V	X20DTL	10/1996 ► 01/1999		+	**509564**	**698202**		**699102**	**699602**	295 CC	**699937**	RHD
VECTRA (95>2002)	2.0 TDi 16V	X20DTH	09/1997 ► 12/1998	**817670**		**509563**	**698202**		**699102**	**699602**	295 CC	**699937**	RHD
VECTRA (95>2002)	1.6 i 16V	Z16XE	02/1999 ► 06/2003		+	**509564**	**698202**		**699102**	**699602**	295 CC	**699937**	>ch W1999999 / RHD
VECTRA (95>2002)	1.8 i 16V	Z18XE	02/1999 ► 06/2003		+	**509564**	**698202**		**699102**	**699602**	295 CC	**699937**	>ch W1999999 / RHD
VECTRA (95>2002)	2.2 i 16V	Z22SE	02/1999 ► 06/2003		+	**509564**	**698202**		**699307**	**699807**	120 CC	**699935**	RHD
VECTRA (95>2002)	2.0 DTi 16V	Y20DTH	02/1999 ► 06/2003	**817670**		**509563**	**698202**		**699102**	**699602**	295 CC	**699937**	RHD
VECTRA (95>2002)	2.2 DTI 16V	Y22DTR	09/2000 ► 06/2003	**817670**		**509563**	**698202**		**699102**	**699602**	295 CC	**699937**	RHD
VECTRA (2002>2005)	1.6 i 16V	Z16XE	04/2002 ►	**817647**	+	**509692**	**698711**	**698710**	**699317**	**699817**	120 CC	**699935**	RHD
VECTRA (2002>2005)	1.8 i 16V	Z18XE, Z18XEL	04/2002 ►	**817647**	+	**509692**	**698711**	**698710**	**699317**	**699817**	120 CC	**699935**	RHD
VECTRA (2002>2005)	2.0 i Turbo 16V	Z20NET	07/2003 ►	**817647**	+		**698711**	**698710**	**699318**	**699818**	120 CC	**699935**	RHD
VECTRA (2002>2005)	2.2 i 16V	Z22SE	04/2002 ►	**817647**	+	**509692**	**698711**	**698710**	**699318**	**699818**	120 CC	**699935**	RHD
VECTRA (2002>2005)	2.2 DIG 16V	Z22YH	07/2003 ►	**817647**	+		**698711**	**698710**	**699318**	**699818**	120 CC	**699935**	RHD
VECTRA (2002>2005)	2.0 DTi 16V	Y20DTH	04/2002 ► 03/2005	**817648**	+	**509693**	**698711**	**698710**	**699355**	**699855**	120 CC	**699935**	RHD
VECTRA (2002>2005)	2.2 DTI 16V	Y22DTR	04/2002 ►	**817648**	+	**509693**	**698711**	**698710**	**699355**	**699855**	120 CC	**699935**	RHD
ZAFIRA (99>2003)	1.6 i 16V	X16XEL, Z16XE, Z16XE/D3	01/1999 ► 01/2000	**817505**	+		**698663**	**698708**	**699301**		120 CC	**699935**	>ch Y2147297 / RHD
ZAFIRA (99>2003)	1.6 i 16V	X16XEL, Z16XE, Z16XE/D3	02/2000 ► 12/2001	**817505**	+		**698663**	**698708**		**699769**			RHD
ZAFIRA (99>2003)	1.6 i 16V	X16XEL, Z16XE, Z16XE/D3	01/2002 ► 06/2003	**818047**	+	**509691**	**698663**	**698708**		**699897**			ch 22000001> / RHD
ZAFIRA (99>2003)	1.8 i 16V	Z18XE	01/2002 ► 06/2003	**818047**	+	**509691**	**698663**	**698708**					ch 22000001> / RHD
ZAFIRA (99>2003)	1.8 i 16V	X18XE1, Z18XE	01/1999 ► 01/2000	**817505**	+		**698663**	**698708**	**699301**		120 CC	**699935**	>ch Y2147297 / RHD
ZAFIRA (99>2003)	1.8 i 16V	X18XE1, Z18XE	01/1999 ► 01/2000	**817505**	+	**509691**	**698663**	**698708**	**699301**		120 CC	**699935**	>ch Y2147297 / RHD
ZAFIRA (99>2003)	1.8 i 16V	X18XE1, Z18XE	02/2000 ► 12/2001	**817505**	+		**698663**	**698708**					>ch 12999999 / RHD
ZAFIRA (99>2003)	1.8 i 16V	X18XE1, Z18XE	02/2000 ► 12/2001	**817505**	+	**509691**	**698663**	**698708**					>ch 12999999 / RHD

							PA	CA	NEW	ES			
VAUXHALL (.../...)													
ZAFIRA (99>2003)	1.8 i 16V	X18XE1, Z18XE	01/2002 ► 06/2002	**817505**	+		**698663**	**698708**					>ch 12999999 / RHD
ZAFIRA (99>2003)	1.8 i 16V	X18XE1, Z18XE	01/2002 ► 06/2002	**817505**	+	**509691**	**698663**	**698708**					>ch 12999999 / RHD
ZAFIRA (99>2003)	2.2 i 16V	Z22SE	01/1999 ► 12/2001	**817505**	+		**698663**	**698708**	**699307**	**699807**	120 CC	**699935**	>ch 12999999 / RHD
ZAFIRA (99>2003)	2.2 i 16V	Z22SE	01/2002 ► 06/2003	**818047**	+	**509691**	**698663**	**698708**	**699307**	**699807**	120 CC	**699935**	ch 22000001> / RHD
ZAFIRA (99>2003)	2.0 DT 16V	X20DTL	01/1999 ► 12/2000	**817505**	+		**698663**	**698708**					>ch 12999999 / RHD
ZAFIRA (99>2003)	2.0 DT 16V	X20DTL	01/2001 ► 12/2001	**817505**	+		**698663**	**698708**	**699324**	**699824**	120 CC	**699935**	ch 12082350> / RHD
ZAFIRA (99>2003)	2.0 DT 16V	X20DTL	01/2002 ► 06/2003	**818047**	+	**509691**	**698663**	**698708**	**699324**	**699824**	120 CC	**699935**	ch 12082350> / RHD
ZAFIRA (99>2003)	2.0 DTI 16V	Y20DTL	01/1999 ► 12/2000	**817505**	+		**698663**	**698708**	**699324**	**699824**	120 CC	**699935**	>ch 12999999 / RHD
ZAFIRA (99>2003)	2.0 DTI 16V	Y20DTL	01/2001 ► 12/2001	**817505**	+		**698663**	**698708**	**699324**	**699824**	120 CC	**699935**	ch 12082350> / RHD
ZAFIRA (99>2003)	2.0 DTI 16V	Y20DTL	01/2002 ► 06/2003	**818047**	+	**509691**	**698663**	**698708**	**699324**	**699824**	120 CC	**699935**	ch 12082350> / RHD
ZAFIRA (99>2003)	2.0 DTi 16V	Y20DTH	01/1999 ► 12/2000	**817506**		**509400**	**698663**	**698708**		**699897**			ch 2H009142>ch 22027043 / RHD
ZAFIRA (99>2003)	2.0 DTi 16V	Y20DTH	01/2001 ► 01/2002	**817506**		**509400**	**698663**	**698708**		**699897**			ch 2H009142>ch 22027043 / RHD
ZAFIRA (99>2003)	2.0 DTi 16V	Y20DTH	01/2002 ► 06/2003		+	**509691**	**698663**	**698708**		**699897**			ch 2H009142>ch 22027043 / RHD
ZAFIRA (2003>)	1.6 i 16V	Z16XE, Z16XE/D4	07/2003 ► 06/2005	**818047**	+		**698663**	**698708**		**699897**			RHD
ZAFIRA (2003>)	1.8 i 16V	Z18XE	07/2003 ► 06/2005	**818047**	+		**698663**	**698708**		**699897**			RHD
ZAFIRA (2003>)	2.0 i Turbo 16V	Z20LET	07/2003 ► 06/2005	**817505**	+		**698663**	**698708**					RHD
ZAFIRA (2003>)	2.0 DTI 16V	Y20DTL	07/2003 ► 06/2005	**818047**	+		**698663**	**698708**	**699324**	**699824**	120 CC	**699935**	RHD
ZAFIRA (2003>)	2.2 DTI 16V	Y22DTR	07/2003 ► 06/2005	**817506**			**698663**	**698708**	**699324**	**699824**	120 CC	**699935**	RHD
VOLKSWAGEN													
BORA	1.4 i 16V	AKQ	09/1998 ► 05/2000	**817244**		**508811**	**698159**	**698716**	**813200**	**813700**	135 CC	**699935**	>ch 1J-X-800 000, ch 1J-Y-300 000
BORA	1.4 i 16V	AHW, APE	09/1998 ► 08/1999	**817244**		**508811**	**698159**	**698716**	**813200**	**813700**	135 CC	**699935**	>ch 1J-X-800 000, ch 1J-Y-300 000
BORA	1.4 i 16V	AHW, APE	09/1999 ► 05/2001	**817244**		**508811**	**698159**	**698716**	**813200**	**813700**	135 CC	**699935**	
BORA	1.4 i 16V	AHW, AXP, BCA	05/2001 ► 05/2005	**817244**		**508811**	**698159**	**698716**	**813200**	**813700**	135 CC	**699935**	ch 1J-2-000 001>
BORA	1.6 i	AEH, AKL, APF	09/1998 ► 08/1999	**817244**		**508811**	**698159**	**698716**	**813200**	**813700**	135 CC	**699935**	>ch 1J-X-800 000, ch 1J-Y-300 000
BORA	1.6 i	AEH, AKL, APF	09/1999 ► 05/2000	**817244**		**508811**	**698159**	**698716**					ch 1J-3-000 001>
BORA	1.6 i	AEH, AKL, AVU, BFQ, APF	08/1999 ► 05/2005	**817244**		**508811**	**698159**	**698716**	**813200**	**813700**	135 CC	**699935**	>ch 1J-X-800 000, ch 1J-Y-300 000
BORA	1.6 i 16V	ATN, AUS	11/1999 ► 10/2000	**817244**		**508811**	**698159**	**698716**	**813200**	**813700**	135 CC	**699935**	

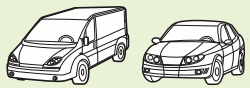

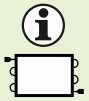

PA | CA | NEW | ES

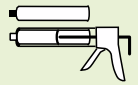

VOLKSWAGEN (.../...)

BORA	1.6 i 16V	AZD	09/2000 ► 11/2001	**817244**		**508811**	**698159**	**698716**	**813200**	**813700**	135 CC	**699935**	ch 1J-2-000 001>
BORA	1.6 i 16V	BCB	11/2001 ► 05/2005	**817244**		**508811**	**698159**	**698716**	**813200**	**813700**	135 CC	**699935**	ch 1J-3-000 001>
BORA	1.6 FSI 16V	BAD	08/2001 ► 05/2005	**817244**		**508811**	**698159**	**698716**	**699383**		160 CC	**699935**	
BORA	1.8 i 20V	AGN	02/1999 ► 05/1999	**817244**		**508811**	**698159**	**698716**	**813200**	**813700**	135 CC	**699935**	>ch 1J-X-800 000
BORA	1.8 i Turbo 20V	AGU, AUM	09/2000 ► 05/2005	**817244**		**508811**	**698159**	**698716**	**813200**	**813700**	135 CC	**699935**	ch 1J-2-000 001>
BORA	1.8 i Turbo 20V	AUQ	09/2000 ► 05/2005	**817244**		**508811**	**698159**	**698716**	**813200**	**813700**	135 CC	**699935**	ch 1J-2-000 001>
BORA	2.0 i	APK, AQY	09/1998 ► 08/1999	**817244**		**508811**	**698159**	**698716**	**813200**	**813700**	135 CC	**699935**	>ch 1J-X-800 000, ch 1J-Y-300 000
BORA	2.0 i	APK, AQY	09/1999 ►	**817244**		**508811**	**698159**	**698716**	**813200**	**813700**	135 CC	**699935**	ch 1J-3-000 001>
BORA	1.9 SDi	AQM	11/1998 ► 08/1999	**817244**		**508811**	**698159**	**698716**	**813200**	**813700**	135 CC	**699935**	>ch 1J-Y-300 000
BORA	1.9 SDi	AQM	08/1999 ► 05/2005	**817244**		**508811**	**698159**	**698716**	**813200**	**813700**	135 CC	**699935**	ch 1J-3-000 001>
BORA	1.9 SDi	AGP	05/2000 ► 04/2001	**817244**		**508811**	**698159**	**698716**	**813200**	**813700**	135 CC	**699935**	
BORA	1.9 TDi	AGR, AHF, AJM, ALH, ASZ, ATD	09/1998 ► 07/1999	**817244**		**508811**	**698159**	**698716**	**813200**	**813700**	135 CC	**699935**	>ch 1J-Y-300 000
BORA	1.9 TDi	AXR, AGR, AHF, ALH, ASV, ARL	08/1999 ► 05/2005	**817244**		**508811**	**698159**	**698716**	**813200**	**813700**	135 CC	**699935**	ch 1J-Y-300 001>
GOLF III (91>97)	ALL	ALL	09/1991 ► 07/1993				**698160**						ch 1HP-990 000
GOLF III (91>97)	1.4	ABD, AEX	11/1991 ► 12/1997	**816910**		**508607**	**698159**	**698686**					
GOLF III (91>97)	1.6	ABU, AEK, AKS	11/1991 ► 12/1997	**816910**		**508607**	**698159**	**698686**	**699115**	**699615**	135 CC	**699935**	
GOLF III (91>97)	1.6 i	AEK, AFT	10/1994 ► 12/1997	**816910**		**508607**	**698159**	**698686**	**699115**	**699615**	135 CC	**699935**	
GOLF III (91>97)	1.8	AAM	11/1991 ► 12/1997	**816910**		**508607**	**698159**	**698686**	**699115**	**699615**	135 CC	**699935**	
GOLF III (91>97)	1.8	ABS, ACC, ADZ	08/1992 ► 12/1997	**816910**		**508607**	**698159**	**698686**	**699115**	**699615**	135 CC	**699935**	ch 1H-PW000 001>
GOLF III (91>97)	2.0 16V	ABF	08/1992 ► 12/1997	**816910**		**508607**	**698159**	**698686**	**699115**	**699615**	135 CC	**699935**	ch 1H-PW000 001>
GOLF III (91>97)	2.0 E	2E, ADY, AEP, AGG, AKR	08/1992 ► 12/1997	**816910**		**508607**	**698159**	**698686**	**699115**	**699615**	135 CC	**699935**	ch 1H-PW000 001>
GOLF III (91>97)	1.9 D	1Y	11/1991 ► 12/1997	**816910**		**508607**	**698159**	**698686**					
GOLF III (91>97)	1.9 TD	AAZ	08/1992 ► 12/1997	**816910**		**508607**	**698159**	**698686**	**699115**	**699615**	135 CC	**699935**	ch 1H-PW000 001>
GOLF III (91>97)	1.9 TDi	1Z, AFN, AHU, ALE	06/1993 ► 12/1997	**816910**		**508607**	**698159**	**698686**	**699115**	**699615**	135 CC	**699935**	
GOLF IV (97>2003)	1.4 i 16V	AHW, AKQ, APE, AXP	10/1997 ► 04/2000	**817244**		**508811**	**698159**	**698716**	**813200**	**813700**	135 CC	**699935**	
GOLF IV (97>2003)	1.4 i 16V	BCA	10/2001 ► 05/2004	**817244**		**508811**	**698159**	**698716**	**813200**	**813700**	135 CC	**699935**	
GOLF IV (97>2003)	1.6 i	AEH, AKL, APF, AVU, BFQ	10/1997 ► 04/2000	**817244**		**508811**	**698159**	**698716**	**813200**	**813700**	135 CC	**699935**	

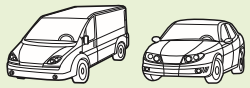

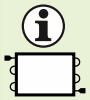

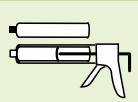

VOLKSWAGEN (.../...)

							PA	CA	NEW	ES			
GOLF IV (97>2003)	1.6 i	AEH, AKL, APF, AVU, BFQ	05/2000 ► 05/2004	**817244**		**508811**	**698159**	**698716**	**813200**	**813700**	135 CC	**699935**	
GOLF IV (97>2003)	1.6 i 16V	ATN, AUS, AZD	11/1999 ► 04/2000	**817244**		**508811**	**698159**	**698716**	**813200**	**813700**	135 CC	**699935**	>ch 1J-1-900 000
GOLF IV (97>2003)	1.6 i 16V	AUS, AZD	05/2000 ► 11/2001	**817244**		**508811**	**698159**	**698716**	**813200**	**813700**	135 CC	**699935**	ch 1J-2-000 001>ch 1J-1-900 000
GOLF IV (97>2003)	1.6 i 16V	BCB	11/2001 ► 05/2004	**817244**		**508811**	**698159**	**698716**	**813200**	**813700**	135 CC	**699935**	
GOLF IV (97>2003)	1.6 FSI 16V	BAD	08/2001 ► 05/2004	**817244**		**508811**	**698159**	**698716**	**699383**		160 CC	**699935**	
GOLF IV (97>2003)	1.8 i 20V	AGN	10/1997 ► 04/2000	**817244**		**508811**	**698159**	**698716**	**813200**	**813700**	135 CC	**699935**	ch 1J-Y-300 001>ch 1J-1-900 000
GOLF IV (97>2003)	1.8 i Turbo 20V	AGU, AUM, ARZ	10/1997 ► 04/2000	**817244**		**508811**	**698159**	**698716**	**813200**	**813700**	135 CC	**699935**	>ch 1J-1-900 000, ch 1J-Y-300 000
GOLF IV (97>2003)	1.8 i Turbo 20V	ARZ	05/2000 ► 09/2000	**817244**		**508811**	**698159**	**698716**	**813200**	**813700**	135 CC	**699935**	ch 1J-Y-300 001>
GOLF IV (97>2003)	1.8 i Turbo 20V	AGU, AUM, AUQ	05/2000 ► 05/2004	**817244**		**508811**	**698159**	**698716**	**813200**	**813700**	135 CC	**699935**	ch 1J-2-000 001>ch 1J-1-900 000
GOLF IV (97>2003)	2.0 i	APK, AQY, AZG, AZJ, BEH	08/1998 ► 04/2000	**817244**		**508811**	**698159**	**698716**	**813200**	**813700**	135 CC	**699935**	
GOLF IV (97>2003)	2.0 i	APK, AQY, AZG, AZJ, BEH	05/2000 ► 05/2004	**817244**		**508811**	**698159**	**698716**	**813200**	**813700**	135 CC	**699935**	ch 1J-Y-300 001>ch 1J-1-900 000
GOLF IV (97>2003)	1.9 SDi	AGP, AQM	10/1997 ► 04/2000	**817244**		**508811**	**698159**	**698716**	**813200**	**813700**	135 CC	**699935**	ch 1J-Y-300 001>ch 1J-1-900 000
GOLF IV (97>2003)	1.9 SDi	AGP, AQM	05/2000 ► 05/2004	**817244**		**508811**	**698159**	**698716**	**813200**	**813700**	135 CC	**699935**	ch 1J-Y-300 001>ch 1J-1-900 000
GOLF IV (97>2003)	1.9 TDi	AGR, AHF, AJM, ALH, ASV, ATD	10/1997 ► 04/2000	**817244**		**508811**	**698159**	**698716**	**813200**	**813700**	135 CC	**699935**	ch 1J-Y-300 001>ch 1J-1-900 000
GOLF IV (97>2003)	1.9 TDi	AGR, AHF, AJM, ALH, ASV, ATD	05/2000 ► 05/2004	**817244**		**508811**	**698159**	**698716**	**813200**	**813700**	135 CC	**699935**	
GOLF IV (97>2003)	1.9 TDi	AJM, ASZ, AXR	04/2001 ► 05/2004	**817244**		**508811**	**698159**	**698716**	**813200**	**813700**	135 CC	**699935**	
GOLF V (2003>)	1.4 i 16V	BCA	10/2003 ►	**817777**		**509790**		**715665**	**699357**		120 CC	**699935**	RHD
GOLF V (2003>)	1.4 i 16V	BCA	10/2003 ►	**817777**		**509790**	**698800**	**698801 (+)**	**699357**		120 CC	**699935**	
GOLF V (2003>)	1.4 FSi 16V	BKG	10/2003 ► 05/2004	**817777**		**509790**		**715665**	**699357**		120 CC	**699935**	RHD
GOLF V (2003>)	1.4 FSi 16V	BKG	10/2003 ► 05/2004	**817777**		**509790**	**698800**	**698801 (+)**	**699357**		120 CC	**699935**	
GOLF V (2003>)	1.6 i	BGU	01/2004 ► 05/2005	**817777**		**509790**		**715665**	**699357**		120 CC	**699935**	RHD
GOLF V (2003>)	1.6 i	BGU	01/2004 ► 05/2005	**817777**		**509790**	**698800**	**698801 (+)**	**699357**		120 CC	**699935**	
GOLF V (2003>)	1.6 FSi 16V	BAG	10/2003 ► 07/2004	**817777**		**509790**		**715665**	**699357**		120 CC	**699935**	RHD
GOLF V (2003>)	1.6 FSi 16V	BAG	10/2003 ► 07/2004	**817777**		**509790**	**698800**	**698801 (+)**	**699357**		120 CC	**699935**	
GOLF V (2003>)	2.0 FSi 16V	AXW, BLX	01/2004 ► 05/2005	**817777**		**509790**		**715665**	**699357**		120 CC	**699935**	RHD
GOLF V (2003>)	2.0 FSi 16V	AXW, BLX	01/2004 ► 05/2005	**817777**		**509790**	**698800**	**698801 (+)**	**699357**		120 CC	**699935**	
GOLF V (2003>)	2.0 TFSi 16V	AXX	09/2004 ► 06/2005	**817777**		**509790**		**715665**	**699357**		120 CC	**699935**	RHD

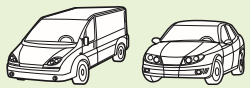

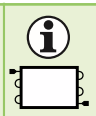

PA

CA

NEW ES

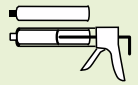

VOLKSWAGEN (.../...)

GOLF V (2003>)	2.0 TFSi 16V	AXX	09/2004 ► 06/2005	**817777**	+	**509790**	**698800**	**698801 (+)**	**699357**		120 CC	**699935**	
GOLF V (2003>)	1.9 TDi	BJB, BKC, BLS, BRU	10/2003 ► 05/2005	**817777**	+	**509790**		**715665**	**699357**		120 CC	**699935**	RHD
GOLF V (2003>)	1.9 TDi	BXE	02/2006 ►	**817777**	+	**509790**		**715665**	**699357**		120 CC	**699935**	RHD
GOLF V (2003>)	1.9 TDi	BJB, BKC, BLS, BRU	10/2003 ► 05/2005	**817777**	+	**509790**	**698800**	**698801 (+)**	**699357**		120 CC	**699935**	
GOLF V (2003>)	1.9 TDi	BXE	02/2006 ►	**817777**	+	**509790**	**698800**	**698801 (+)**	**699357**		120 CC	**699935**	
GOLF V (2003>)	2.0 SDi	BDK	01/2004 ► 05/2005	**817777**	+	**509790**		**715665**	**699357**		120 CC	**699935**	RHD
GOLF V (2003>)	2.0 SDi	BDK	01/2004 ► 05/2005	**817777**	+	**509790**	**698800**	**698801 (+)**	**699357**		120 CC	**699935**	
GOLF V (2003>)	2.0 TDi 16V	AZV, BKD	10/2003 ► 05/2004	**817777**	+	**509790**		**715665**	**699357**		120 CC	**699935**	RHD
GOLF V (2003>)	2.0 TDi 16V	BMN	11/2005 ►	**817777**	+	**509790**		**715665**	**699357**		120 CC	**699935**	RHD
GOLF V (2003>)	2.0 TDi 16V	AZV, BKD	10/2003 ► 05/2004	**817777**	+	**509790**	**698800**	**698801 (+)**	**699357**		120 CC	**699935**	
GOLF V (2003>)	2.0 TDi 16V	BMN	11/2005 ►	**817777**	+	**509790**	**698800**	**698801 (+)**	**699357**		120 CC	**699935**	
PASSAT (96>2000)	1.6 i	ADP	10/1996 ► 10/1997	**816967**		**508881**	**698164**	**715578**	**699222**	**699722**	250 CC	**699935**	
PASSAT (96>2000)	1.6 i	AHL, ANA, ARM	10/1996 ► 08/2000	**816967**		**508881**	**698164**	**715578**	**699376**				
PASSAT (96>2000)	1.8 i	AFY	01/1997 ► 09/2000	**816967**			**698164**	**715578**	**699222**	**699722**	250 CC	**699935**	
PASSAT (96>2000)	1.8 i 20V, Turbo	ADR, APT, ARG, AEB, ANB, APU	10/1996 ► 08/2000	**816967**			**698164**	**715578**	**699222**	**699722**	250 CC	**699935**	
PASSAT (96>2000)	1.9 TDi	AFN, AHH, AHU, AVG	10/1996 ► 08/2000	**816967**		**508881**	**698164**	**715578**	**699222**	**699722**	250 CC	**699935**	
PASSAT (96>2000)	1.9 TDi	AJM, ATJ	01/1999 ► 08/2000	**817840**		**509501**	**698164**	**715578**	**699222**	**699722**	250 CC	**699935**	
PASSAT (96>2000)	1.9 TDi	AFN	05/1999 ► 09/2000	**816967**		**508881**	**698164**	**715578**	**699222**	**699722**	250 CC	**699935**	
PASSAT (96>2000)	1.9 TDi	AVG	09/1999 ► 09/2000	**817840**		**508881**	**698164**	**715578**	**699222**	**699722**	250 CC	**699935**	
PASSAT (96>2000)	2.5 TDi V6	AFB, AKN	08/1998 ► 08/2000	**817840**		**509501**	**698164**	**715578**	**699275**	**699775**	250 CC	**699935**	
PASSAT (2000>2005)	1.6 i	ALZ	10/2000 ► 05/2005	**817679**		**509712**	**698679**	**698686**	**699376**				
PASSAT (2000>2005)	1.8 i Turbo 20V	AWM, AWT	10/2000 ► 05/2005	**817679**		**509712**	**698679**	**698686**	**699376**				
PASSAT (2000>2005)	2.0 i	AZM	10/2000 ► 05/2005	**817679**		**509712**	**698679**	**698686**	**699376**				
PASSAT (2000>2005)	2.0 i 20V	ALT	11/2001 ► 05/2005	**817679**		**509712**	**698679**	**698686**	**699376**				
PASSAT (2000>2005)	1.9 TDi	AVB, AVF, AWX	10/2000 ► 05/2005	**817679**		**509712**	**698679**	**698686**	**699376**				
PASSAT (2000>2005)	2.0 TDi	BGW	11/2003 ► 05/2005	**817679**		**509712**	**698679**	**698686**	**699376**				
PASSAT (2000>2005)	2.5 TDi V6	AKN, BDG	10/2000 ► 05/2005	**817679**		**509712**	**698679**	**698686**	**699275**	**699775**	250 CC	**699935**	

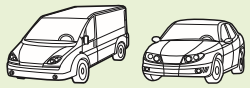

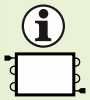

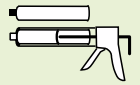

VOLKSWAGEN (.../...)

								PA	CA	NEW	ES			
PASSAT (2000>2005)	2.5 TDi V6	BAU, BDH	01/2003 ► 05/2005	**817679**		**509712**	**698679**	**698686**						
POLO (94>99)	1.0 i	AER, AEV, ALL	10/1994 ► 12/1999	**816908**		**508607**	**698159**	**698686**	**699115**	**699615**	135 CC	**699935**	120 mm
POLO (94>99)	1.0 i	AER, AEV	10/1994 ► 12/1999	**816908**		**508607**	**698159**	**698686**	**699015**	**699515**	100 CC	**699935**	104 mm
POLO (94>99)	1.3 i	ADX	10/1994 ► 06/1995	**816908**		**508607**	**698159**	**698686**	**699015**	**699515**	100 CC	**699935**	104 mm
POLO (94>99)	1.3 i	ADX	10/1994 ► 04/1997	**816908**		**508607**	**698159**	**698686**	**699115**	**699615**	135 CC	**699935**	120 mm
POLO (94>99)	1.4 i	AEX	07/1995 ► 12/1997	**816908**		**508607**	**698159**	**698686**	**699015**	**699515**	100 CC	**699935**	104 mm
POLO (94>99)	1.4 i	AEX, AKV, ANX, APQ	07/1995 ► 12/1999	**816908**		**508607**	**698159**	**698686**	**699115**	**699615**	135 CC	**699935**	120 mm
POLO (94>99)	1.4 i 16V	AFH	04/1996 ► 12/1999	**816908**		**508607**	**698159**	**698686**	**699015**	**699515**	100 CC	**699935**	104 mm
POLO (94>99)	1.4 i 16V	AFH	04/1996 ► 12/1999	**816908**		**508607**	**698159**	**698686**	**699115**	**699615**	135 CC	**699935**	120 mm
POLO (94>99)	1.6 i	AEA, AEE, AHS	10/1994 ► 12/1999	**816908**		**508607**	**698159**	**698686**	**699015**	**699515**	100 CC	**699935**	104 mm
POLO (94>99)	1.6 i	1F, AEA, AEE, AFT, AHS, ALM	10/1994 ► 12/1999	**816908**		**508607**	**698159**	**698686**	**699115**	**699615**	135 CC	**699935**	120 mm
POLO (94>99)	1.6 i 16V	AJV	08/1998 ► 12/1999	**816908**		**508607**	**698159**	**698686**	**699115**	**699615**	135 CC	**699935**	120 mm
POLO (94>99)	1.8 i	ADD	03/1998 ► 08/1999	**816908**		**508607**	**698159**	**698686**	**699115**	**699615**	135 CC	**699935**	120 mm
POLO (94>99)	2.0 i	ADC	08/1999 ► 08/1999	**816908**		**508607**	**698159**	**698686**	**699115**	**699615**	135 CC	**699935**	120 mm
POLO (94>99)	1.7 SDI	AKW	11/1997 ► 08/1999	**816908**		**508607**	**698159**	**698686**	**699115**	**699615**	135 CC	**699935**	120 mm
POLO (94>99)	1.7 SDI	AHG, AKU	04/1997 ► 12/1999	**816908**		**508607**	**698159**	**698686**	**699115**	**699615**	135 CC	**699935**	120 mm
POLO (94>99)	1.9 D	AEF	01/1995 ► 04/1998	**816908**		**508607**	**698159**	**698686**	**699015**	**699515**	100 CC	**699935**	104 mm
POLO (94>99)	1.9 D	AEF	10/1994 ► 05/1999	**816908**		**508607**	**698159**	**698686**	**699115**	**699615**	135 CC	**699935**	120 mm
POLO (94>99)	1.9 SDI	AGD	07/1996 ► 12/1999	**816908**		**508607**	**698159**	**698686**	**699115**	**699615**	135 CC	**699935**	120 mm
POLO (94>99)	1.9 SDI	AGD	07/1996 ► 04/1998	**816908**		**508607**	**698159**	**698686**	**699015**	**699515**	100 CC	**699935**	104 mm
POLO (94>99)	1.9 SDi	1Y, AEY	05/1996 ► 09/1999	**816908**		**508607**	**698159**	**698686**	**699115**	**699615**	135 CC	**699935**	120 mm
POLO (94>99)	1.9 TDi	AFN, AHU, ALE	01/1997 ► 09/1999	**816908**		**508607**	**698159**	**698686**	**699115**	**699615**	135 CC	**699935**	120 mm
POLO (99>2001)	1.0 i	ALD, AUC	10/1999 ► 09/2001	**817247**		**508812**	**698159**	**698716**	**699303**		135 CC	**699935**	
POLO (99>2001)	1.4 i	AKK, AKP, AUD	10/1999 ► 09/2001	**817247**		**508812**	**698159**	**698716**	**699303**		135 CC	**699935**	
POLO (99>2001)	1.4 i 16V	AFK, AHW, AUA, AUB	10/1999 ► 09/2001	**817247**		**508812**	**698159**	**698716**	**699303**		135 CC	**699935**	
POLO (99>2001)	1.4 i Classic	ANW	10/1999 ► 08/2000	**816908**		**508607**	**698159**	**698716**	**813200**	**813700**	135 CC	**699935**	
POLO (99>2001)	1.4 i Classic	AKK, AUD	10/1999 ► 09/2001	**816908**		**508607**	**698159**	**698716**	**813200**	**813700**	135 CC	**699935**	

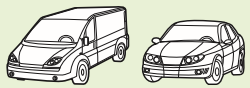

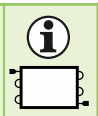

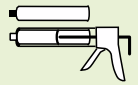

VOLKSWAGEN (.../...)

								PA	CA	NEW	ES			
POLO (99>2001)	1.4 i Classic 16V	APE	10/1999 ► 06/2000	**816908**		**508607**	**698159**	**698716**	**813200**	**813700**	135 CC	**699935**	
POLO (99>2001)	1.6 i 16V	ARC	11/1999 ► 04/2000	**817247**		**508812**	**698159**	**698716**	**699303**		135 CC	**699935**	
POLO (99>2001)	1.6 i 16V	AVY	05/2000 ► 09/2001	**817247**		**508812**	**698159**	**698716**					
POLO (99>2001)	1.6 i Classic	APF	03/2000 ► 10/2000	**816908**		**508607**	**698159**	**698716**	**813200**	**813700**	135 CC	**699935**	
POLO (99>2001)	1.6 i Classic	AEH, AKL, ALM	10/1999 ► 10/2001	**816908**		**508607**	**698159**	**698716**	**813200**	**813700**	135 CC	**699935**	
POLO (99>2001)	1.6 i Classic 16V	AUR	07/2000 ► 09/2001	**816908**		**508607**	**698159**	**698716**	**813200**	**813700**	135 CC	**699935**	
POLO (99>2001)	1.8 i Classic	ADD	03/2000 ► 09/2001	**816908**		**508607**	**698159**	**698716**	**813200**	**813700**	135 CC	**699935**	
POLO (99>2001)	2.0 i Classic	ADC	06/2000 ► 09/2001	**816908**		**508607**	**698159**	**698716**	**813200**	**813700**	135 CC	**699935**	
POLO (99>2001)	1.4 TDi	AMF	10/1999 ► 09/2001	**817246**		**508812**	**698159**	**698716**	**699303**		135 CC	**699935**	
POLO (99>2001)	1.7 SDi	AKU	10/1999 ► 04/2000	**816908**		**508812**	**698159**	**698716**	**699015**	**699515**	100 CC	**699935**	
POLO (99>2001)	1.9 D	AEF	10/1999 ► 07/2001	**816908**		**508812**	**698159**	**698716**	**699015**	**699515**	100 CC	**699935**	
POLO (99>2001)	1.9 SDi	AGD	10/1999 ► 09/2001	**816908**		**508812**	**698159**	**698716**	**699015**	**699515**	100 CC	**699935**	
POLO (99>2001)	1.9 SDi Classic	AGP, AQM	10/1999 ► 09/2001	**816908**		**508607**	**698159**	**698716**	**813200**	**813700**	135 CC	**699935**	
POLO (99>2001)	1.9 TDi Classic	ASV	10/1999 ► 09/2001	**816908**		**508607**	**698159**	**698716**	**813200**	**813700**	135 CC	**699935**	
POLO (99>2001)	1.9 TDi Classic	AGR, ALH	10/1999 ► 09/2001	**816908**		**508607**	**698159**	**698716**	**813200**	**813700**	135 CC	**699935**	
POLO (2001>)	1.0 i	ARA	03/2003 ► 09/2003	**817686**	+	**509594**	**698685**	**698739**	**699383**		160 CC	**699935**	
POLO (2001>)	1.2 i	BMD	01/2002 ► 05/2005	**817686**	+	**509594**	**698685**	**698739**					
POLO (2001>)	1.2 i 6V	AWY	01/2002 ► 07/2004	**817686**	+	**509594**	**698685**	**698739**					
POLO (2001>)	1.2 i 12V	AZQ, BME	11/2001 ► 05/2005	**817686**	+	**509594**	**698685**	**698739**					
POLO (2001>)	1.4 i 16V	AUA, AUB, BBY, BBZ, BKY	11/2001 ► 05/2005	**817686**	+	**509594**	**698685**	**698739**	**699383**		160 CC	**699935**	
POLO (2001>)	1.4 FSI 16V	AXU	02/2002 ► 05/2005	**817686**	+	**509594**	**698685**	**698739**	**699383**		160 CC	**699935**	
POLO (2001>)	1.6 i	BAH, BPA	09/2002 ►	**817686**	+	**509594**	**698685**	**698739**	**699383**		160 CC	**699935**	
POLO (2001>)	2.0 i	BBX	09/2002 ►	**817686**	+	**509594**	**698685**	**698739**	**699383**		160 CC	**699935**	
POLO (2001>)	1.4 TDi	AMF, BAY	11/2001 ► 05/2005	**817686**	+	**509594**	**698685**	**698739**	**699383**		160 CC	**699935**	
POLO (2001>)	1.9 SDi	ASY	11/2001 ► 05/2005	**817686**	+	**509594**	**698685**	**698739**	**699383**		160 CC	**699935**	
POLO (2001>)	1.9 TDi	ASZ, ATD, AXR, BLT	11/2001 ► 05/2005	**817686**	+	**509594**	**698685**	**698739**	**699383**		160 CC	**699935**	
POLO (2005>)	1.2 i	BMD	04/2005 ► 05/2005	**817686**	+	**509594**	**698685**	**698739**	**699383**		160 CC	**699935**	>ch 9N—5-180 000

							PA	CA	NEW	ES			
VOLKSWAGEN (.../...)													
POLO (2005>)	1.2 i 12V	BME	04/2005 ►	**817686**	+	**509594**	**698685**	**698739**	**699383**		160 CC	**699935**	>ch 9N—5-180 000
POLO (2005>)	1.4 i 16V	BBZ, BKY	04/2005 ►	**817686**	+	**509594**	**698685**	**698739**	**699383**		160 CC	**699935**	>ch 9N—5-180 000
POLO (2005>)	1.4 FSi 16V	AXU	04/2005 ►	**817686**	+	**509594**	**698685**	**698739**	**699383**		160 CC	**699935**	>ch 9N—5-180 000
POLO (2005>)	1.8 GTI Turbo 20V	BJX	04/2005 ►	**817686**	+	**509594**	**698685**	**698739**	**699383**		160 CC	**699935**	
POLO (2005>)	1.4 TDi	BMS, BNM, BNV	04/2005 ►	**817686**	+	**509594**	**698685**	**698739**	**699383**		160 CC	**699935**	
POLO (2005>)	1.9 Tdi, 1.9 Sdi	ASZ, ATD, AXR, BLT, ASY	04/2005 ►	**817686**	+	**509594**	**698685**	**698739**	**699383**		160 CC	**699935**	>ch 9N—5-180 000
SHARAN (95>2000)	1.8 i Turbo 20V	AJH	11/1997 ► 09/1999	**816948**		**508807**	**698247**	**698696**	**699305**		135 CC	**699935**	>ch 7M-Y-025 000
SHARAN (95>2000)	1.8 i Turbo 20V	AJH	10/1999 ► 02/2000	**816948**		**508807**	**698247**	**698696**	**813200**	**813700**	135 CC	**699935**	ch 7M-Y-025 001>
SHARAN (95>2000)	2.0 i	ADY	09/1995 ► 04/1998	**816948**		**508807**	**698247**	**698696**					
SHARAN (95>2000)	2.0 i	ADY	05/1998 ► 02/2000	**816948**		**508807**	**698247**	**698696**	**699115**	**699615**	135 CC	**699935**	ch 7H-X-000002>
SHARAN (95>2000)	1.9 TDi	1Z, AFN, AHU, AVG	09/1995 ► 02/2000	**816948**		**508807**	**698247**	**698696**	**699115**	**699615**	135 CC	**699935**	ch 7H-X-000002>
SHARAN (95>2000)	1.9 TDi	ANU	03/1999 ► 02/2000	**816948**		**508807**	**698247**	**698696**	**813200**	**813700**	135 CC	**699935**	
SHARAN (2000>2003)	1.8 i Turbo 20V	AWC	04/2000 ►	**818004**	+	**509593**	**698247**	**698696**	**813200**	**813700**	135 CC	**699935**	ch 7M-2-025 001>ch 7M-2-025 000
SHARAN (2000>2003)	2.0 i	ATM	04/2000 ► 05/2003	**818004**	+	**509593**	**698247**	**698696**	**813200**	**813700**	135 CC	**699935**	ch 7M-2-025 001>ch 7M-2-025 000
SHARAN (2000>2003)	1.9 TDi	ANU, ASZ, AUY	04/2000 ►	**818004**	+	**509593**	**698247**	**698696**	**813200**	**813700**	135 CC	**699935**	ch 7M-2-060 001>ch 7M-2-060 000
SHARAN (2003>)	1.8 i Turbo 20V	AWC	06/2003 ► 10/2003	**818004**	+	**509593**	**698247**	**698696**	**813200**	**813700**	135 CC	**699935**	>ch 7M-4-024 000
SHARAN (2003>)	2.0 i	ATM	06/2003 ► 10/2003	**818004**	+	**509593**	**698247**	**698696**	**813200**	**813700**	135 CC	**699935**	>ch 7M-4-024 000
SHARAN (2003>)	1.9 TDi	ANU, ASZ, AUY	06/2003 ► 10/2003	**818004**	+	**509593**	**698247**	**698696**	**813200**	**813700**	135 CC	**699935**	>ch 7M-4-024 000
VOLVO													
S60	2.0 i Turbo 20V	B5204T5	08/2000 ►					**715571 (+)**	**699264**		180 CC	**699935**	RHD
S60	2.0 i Turbo 20V	B5204T5	08/2000 ► 12/2001					**715571 (+)**	**699262**	**699762**	180 CC	**699935**	RHD
S60	2.0 i Turbo 20V	B5204T5	08/2000 ►				**698771 (+)**	**715512 (+)**	**699264**		180 CC	**699935**	
S60	2.0 i Turbo 20V	B5204T5	08/2000 ► 12/2001				**698771 (+)**	**715512 (+)**	**699262**	**699762**	180 CC	**699935**	
S60	2.3 i Turbo 20V	B5234T3	08/2000 ►					**715571 (+)**	**699264**		180 CC	**699935**	RHD
S60	2.3 i Turbo 20V	B5234T3	08/2000 ► 12/2001					**715571 (+)**	**699262**	**699762**	180 CC	**699935**	RHD
S60	2.3 i Turbo 20V	B5234T7-E2	08/2000 ►					**715571 (+)**	**699264**		180 CC	**699935**	RHD
S60	2.3 i Turbo 20V	B5234T7-E2	08/2000 ► 12/2001					**715571 (+)**	**699262**	**699762**	180 CC	**699935**	RHD

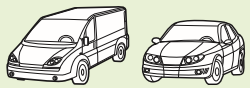

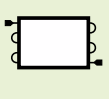

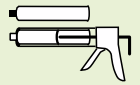

VOLVO (.../...)

							PA	CA	NEW	ES			
S60	2.3 i Turbo 20V	B5234T3	08/2000 ►				**698771 (+)**	**715512 (+)**	**699264**		180 CC	**699935**	
S60	2.3 i Turbo 20V	B5234T3	08/2000 ► 12/2001				**698771 (+)**	**715512 (+)**	**699262**	**699762**	180 CC	**699935**	
S60	2.3 i Turbo 20V	B5234T7-E2	08/2000 ►				**698771 (+)**	**715512 (+)**	**699264**		180 CC	**699935**	
S60	2.3 i Turbo 20V	B5234T7-E2	08/2000 ► 12/2001				**698771 (+)**	**715512 (+)**	**699262**	**699762**	180 CC	**699935**	
S60	2.4 i 20V	B5244S, B5244S2, B5244T3	08/2000 ►					**715571 (+)**	**699264**		180 CC	**699935**	RHD
	2.4 i Turbo 20V												
S60	2.4 i 20V	B5244S, B5244S2, B5244T3	08/2000 ► 12/2001					**715571 (+)**	**699262**	**699762**	180 CC	**699935**	RHD
	2.4 i Turbo 20V												
S60	2.4 i 20V	B5244S, B5244S2, B5244T3	08/2000 ►				**698771 (+)**	**715512 (+)**	**699264**		180 CC	**699935**	
	2.4 i Turbo 20V												
S60	2.4 i 20V	B5244S, B5244S2, B5244T3	08/2000 ► 12/2001				**698771 (+)**	**715512 (+)**	**699262**	**699762**	180 CC	**699935**	
	2.4 i Turbo 20V												
S60	2.4 D 20V	D5244T, D5244T2	06/2001 ► 12/2001					**715571 (+)**	**699262**	**699762**	180 CC	**699935**	RHD
S60	2.4 D 20V	D5244T, D5244T2	06/2001 ► 03/2005					**715571 (+)**	**699264**		180 CC	**699935**	RHD
S60	2.4 D 20V	D5244T, D5244T2	06/2001 ► 12/2001				**698771 (+)**	**715512 (+)**	**699262**	**699762**	180 CC	**699935**	
S60	2.4 D 20V	D5244T, D5244T2	06/2001 ► 03/2005				**698771 (+)**	**715512 (+)**	**699264**		180 CC	**699935**	
S70	2.0 i, 2.0 i 10V	B5202FS, B5204T2, B5204T3	12/1996 ► 12/1998	**817675**		**508928**	**698770 (+)**		**699260**	**699760**	200 CC	**699935**	RHD
	2.0 i Turbo	B5204T4											
S70	2.0 i 10V	B5202FS, B5204T3, B5204T4	01/1999 ► 11/2000	**817675**		**508928**	**698770 (+)**		**699261**		200 CC	**699935**	RHD
	2.0 i Turbo												
S70	2.3 i, 2.3 i Turbo	B5234FS, B5234T2, B5234T3	12/1996 ► 12/1998	**817675**		**508928**	**698770 (+)**		**699260**	**699760**	200 CC	**699935**	RHD
		B5234T4											
S70	2.3 i, 2.3 i Turbo	B5234FS, B5234T3	01/1999 ► 11/2000	**817675**		**508928**	**698770 (+)**		**699261**		200 CC	**699935**	RHD
S70	2.3 i Turbo	B5234T7-E6	05/1997 ► 12/1998	**817675**		**508928**	**698770 (+)**		**699260**	**699760**	200 CC	**699935**	RHD
S70	2.3 i Turbo	B5234T7-E6	01/1999 ► 11/2000	**817675**		**508928**	**698770 (+)**		**699261**		200 CC	**699935**	RHD

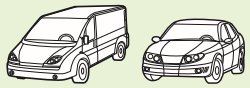

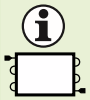

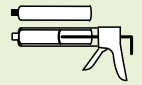

VOLVO (.../...)

							PA	CA	NEW	ES			
S70	2.4 i 20V	B5244S, B5244S2, B5244T	01/1999 ► 11/2000	**817675**		**508928**	**698770 (+)**		**699261**		200 CC	**699935**	RHD
	2.4 i Turbo 20V	B5252FS, B5254S, B5254T											
	2.5 i 10V												
	2.5 i 20V												
	2.5 i Turbo 20V												
S70	2.5 i 10V, 2.5 i 20V	B5252FS, B5254FS, B5254S	12/1996 ► 12/1998	**817675**		**508928**	**698770 (+)**		**699260**	**699760**	200 CC	**699935**	RHD
	2.5 i Turbo 20V	B5254T											
S70	2.5 TDI	D5252T	12/1996 ► 11/2000	**817675**		**508928**	**698770 (+)**		**699260**	**699760**	200 CC	**699935**	RHD
V70 (96>99)	2.0 i 10V	B5202FS, B5204T2, B5204T3	05/1997 ► 06/1998	**817675**		**508928**	**698770 (+)**		**699260**	**699760**	200 CC	**699935**	
	2.0 i Turbo 20V	B5204T4											
V70 (96>99)	2.3 i 20V	B5234FS, B5234T2, B5234T3	05/1997 ► 06/1998	**817675**		**508928**	**698770 (+)**		**699260**	**699760**	200 CC	**699935**	
	2.3 i Turbo 20V	B5234T4, B5234T6											
V70 (96>99)	2.3 i Turbo 20V	B5234T7-E6	05/1997 ► 06/1998	**817675**		**508928**	**698770 (+)**		**699260**	**699760**	200 CC	**699935**	
V70 (96>99)	2.5 i 10V/20V	B5252FS, B5254FS, B5254T	12/1996 ► 12/1998	**817675**		**508928**	**698770 (+)**		**699260**	**699760**	200 CC	**699935**	
	2.5 i Turbo 20V												
V70 (96>99)	2.4 i 20V	B5244S/T, B5252FS, B5254FS	01/1999 ► 12/1999	**817675**		**508928**	**698770 (+)**		**699261**		200 CC	**699935**	
	2.4 i Turbo 20V	B5254T											
V70 (96>99)	2.5 i 10V/20V	B5244S/T, B5252FS, B5254FS	01/1999 ► 12/1999	**817675**		**508928**	**698770 (+)**		**699261**		200 CC	**699935**	
	2.5 i Turbo 20V	B5254T											
V70 (96>99)	2.5 TDi 10V	D5252T	05/1997 ► 06/1998	**817675**		**508928**	**698770 (+)**		**699260**	**699760**	200 CC	**699935**	
V70 (2000>)	2.0 i Turbo 20V	B5204T5	01/2000 ► 12/2001					**715571 (+)**	**699262**	**699762**	180 CC	**699935**	RHD
V70 (2000>)	2.0 i Turbo 20V	B5204T5	01/2000 ►					**715571 (+)**	**699264**		180 CC	**699935**	RHD
V70 (2000>)	2.0 i Turbo 20V	B5204T5	01/2000 ► 12/2001				**698771 (+)**	**715512 (+)**	**699262**	**699762**	180 CC	**699935**	
V70 (2000>)	2.0 i Turbo 20V	B5204T5	01/2000 ►				**698771 (+)**	**715512 (+)**	**699264**		180 CC	**699935**	
V70 (2000>)	2.3 i 20V	B5234T3-E2	01/2000 ► 12/2001					**715571 (+)**	**699262**	**699762**	180 CC	**699935**	RHD
V70 (2000>)	2.3 i 20V	B5234T3-E2	01/2000 ► 03/2005					**715571 (+)**	**699264**		180 CC	**699935**	RHD
V70 (2000>)	2.3 i 20V	B5234T3-E2	01/2000 ► 12/2001				**698771 (+)**	**715512 (+)**	**699262**	**699762**	180 CC	**699935**	

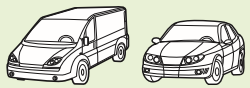

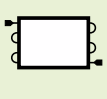

PA

CA

NEW

ES

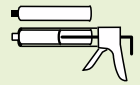

VOLVO (.../...)

V70 (2000>)	2.3 i 20V	B5234T3-E2	01/2000 ► 03/2005				**698771 (+)**	**715512 (+)**	**699264**		180 CC	**699935**	
V70 (2000>)	2.4 i 20V	B5244S, B5244S2, B5244T3	01/2000 ► 12/2001					**715571 (+)**	**699262**	**699762**	180 CC	**699935**	RHD
V70 (2000>)	2.4 i 20V	B5244S, B5244S2, B5244T3	01/2000 ►					**715571 (+)**	**699264**		180 CC	**699935**	RHD
V70 (2000>)	2.4 i 20V	B5244SG	01/2001 ► 12/2001					**715571 (+)**	**699262**	**699762**	180 CC	**699935**	RHD
V70 (2000>)	2.4 i 20V	B5244SG	01/2001 ►					**715571 (+)**	**699264**		180 CC	**699935**	RHD
V70 (2000>)	2.4 i 20V	B5244T5	01/2007 ►					**715571 (+)**					RHD
V70 (2000>)	2.4 i 20V	B5244S, B5244S2, B5244T3	01/2000 ► 12/2001				**698771 (+)**	**715512 (+)**	**699262**	**699762**	180 CC	**699935**	
V70 (2000>)	2.4 i 20V	B5244S, B5244S2, B5244T3	01/2000 ►				**698771 (+)**	**715512 (+)**	**699264**		180 CC	**699935**	
V70 (2000>)	2.4 i 20V	B5244SG	01/2001 ► 12/2001				**698771 (+)**	**715512 (+)**	**699262**	**699762**	180 CC	**699935**	
V70 (2000>)	2.4 i 20V	B5244SG	01/2001 ►				**698771 (+)**	**715512 (+)**	**699264**		180 CC	**699935**	
V70 (2000>)	2.4 i 20V	B5244T5	01/2007 ►				**698771 (+)**	**715512 (+)**					
V70 (2000>)	2.5 T 20V	B5254T4	01/2003 ►					**715571 (+)**	**699264**		180 CC	**699935**	RHD
V70 (2000>)	2.5 T 20V	B5254T4	01/2003 ►				**698771 (+)**	**715512 (+)**	**699264**		180 CC	**699935**	
V70 (2000>)	2.5 TDI	D5252T	01/2000 ► 12/2001					**715571 (+)**	**699262**	**699762**	180 CC	**699935**	RHD
V70 (2000>)	2.5 TDI	D5252T	01/2000 ►					**715571 (+)**	**699264**		180 CC	**699935**	RHD
V70 (2000>)	2.5 TDI	D5252T	01/2000 ► 12/2001				**698771 (+)**	**715512 (+)**	**699262**	**699762**	180 CC	**699935**	
V70 (2000>)	2.5 TDI	D5252T	01/2000 ►				**698771 (+)**	**715512 (+)**	**699264**		180 CC	**699935**	

Round pipe	Round pipe Tube rond Runde Leitungen Tubo rotondo Tubería redonda Ronde pijp Kanaliki okrągłe Круглая труба Kruhová trubka Kerek cső Țeavă rotundă Yuvarlak boru Συμπυκνωτής τύπου "κυκλικής σωλήνας"
Flat pipe	Flat pipe Tuyau plat Flache Leitungen Tubería plana Tubo piatto Platte pijp Kanaliki płaskie Плоская труба Plochá trubka Lapos cső Țeavă plată Düz boru Συμπυκνωτής τύπου " επίπεδου σωλήνα"
Rear engine	Rear engine Moteur à l'arrière Heckmotor Motor trasero Motore posteriore Motor achter Silnik tylny Двигатель задней установки Motor vzadu Farmotoros Motor în spate Arka motor Μηχανή πίσω
Front engine	Front engine Moteur à l'avant Frontmotor Motor delantero Motore anteriore Motor voor Silnik przedni Двигатель передней установки Motor vpředu Első motoros Motor în față Ön motor Μηχανή εμπρόσ
Old type	Old type Type ancien Alter Typ Modelo antiguo Vecchio tipo Oud type Stary typ Старый тип Starší typ Régi típusú Model vechi Eski model Εκτονωτική βαλβίδα παλαιού τύπου
New type	New type Type nouveau Neuer Typ Modelo nuevo Nuovo tipo Nieuw type Nowy typ Новый тип Novější typ Új típusú Nou model Yeni tip Εκτονωτική βαλβίδα νέου τύπου
With rear AC	With rear AC Avec climatisation arrière Mit Klimaanlage hinten Con aire acondicionado trasero Con AC posteriore Met airco achter Z klimatyzacją tylną С кондиционером воздуха задней установки Se zadní AC Hátsó klímával Cu aer condiționat în spate Arka iklimlendirme ile Με A/C

Japanese built	Japanese built De construction japonaise In Japan produziert De construcción japonesa Costruita in Giappone Gebouwd in Japan Konstrukcja japońska Производство Японии Japonská montáž Japán gyártású De fabricație japoneza Japonya'da yapılmış Ιαπωνικής Κατασκευής
UK built	UK built De construction britannique In Großbritannien produziert De construcción británica Costruita in Gran Bretagna Gebouwd in Verenigd Koninkrijk Konstrukcja brytyjska Производство Великобритании Montáž UK Nagy-Britanniában gyártott De fabricație engleza İngiltere'de yapılmış Βρετανικής Κατασκευής
Cyl.	Cylinder Cylindre Zylinder Cilindro Cilindro Cilinder Cylinder Цилиндр Válce Henger Cyl. - cilindru Silindir Κύλινδρος
eng./mot.	Engine Moteur Motor Motor Motore Motor Silnik Двигатель Motor Motor Eng./mot. - motor Motor Μηχανή
LWB	Long wheel base Châssis long Langer Radstand Batalla larga Passo lungo Lange wielbasis Duży rozstaw osi Длинная колесная база Dlouhý rozvor Hosszított alváz LWB - șasiu lung Uzun şasi Μακρύ μεταξόνιο
VIN	Vehicle Identification Number Numéro d'identité du véhicule Fahrzeug-Identifizierungsnummer Número de identificación del vehículo Numero di telaio Identificatienummer van de wagen Numer Identyfikacyjny Pojazdu VIN - numerul de identificare vehiculului Araç kimlik numarası Αριθμός πλαισίου
(1)	Refer to label underbonnet or on compressor Se reporter à la plaque constructeur sous capot ou sur compresseur Siehe Aufkleber im Motorraum oder am Kompressor Véase la etiqueta del compresor o de debajo del capó Vedere l'etichetta sotto il cofano o sul compressore Raadpleeg de label onder de motorkap of op compressor Zapoznaj się z informacją na etykiecie pod maską lub etykietą kompresora См. табличку под капотом или на компрессоре Viz nálepka v motorovém prostoru nebo na kompresoru Lásd a motorháztető alján vagy a klímaszivattyún lévő jelzésen A se consulta placa constructorului sub capotă sau pe compresor Δείτε το ταμπελάκι κάτω από το καπό ή στο συμπιεστή

(2)	Drum type compressor = 300 Compresseur à tambours = 300 Trommelcompressor = 300 Compresor tipo tambor = 300 Compressore a tamburo = 300 Trommelkompressor = 300 Kompresor bębnowy = 300 Барабанный компрессор = 300 Bubnový typ kompresoru = 300 Dobos klímaszivattyú = 300 Compresor cu tobă = 300 Tambur kompresörü = 300 Συμπιεστής τύπου τυμπάνου = 300
3 4 5	Doors Portes Türen Puertas Porta Deuren Drzwi Двери Dveře Ajtók Uși Kapı πόρτεσ
	LHD (Left hand drive) Conduite à gauche Linkslenker Volante a la izquierda Guida a sinistra Stuur links Kierownica po lewej stronie LHD (автомобиль с левым рулем) LHD (levostranné řízení) Jobboldali közlekedés (LHD) Conducere dreaptă Soldan direksiyonlu Αριστερότιμονο
	RHD (Right hand drive) Conduite à droite Rechtslenker Volante a la derecha Guida a destra Stuur rechts Kierownica po prawej stronie RHD (автомобиль с правым рулем) RHD (pravostranné řízení) Baloldali közlekedés (RHD) Conducere stânga Sağdan direksiyonlu Δεξιότιμονο

Values mentioned in this chart correspond to original fluid quantity at time of release of vehicle

Les valeurs indiquées dans ce tableau correspondent aux quantités de fluide d'origine à la mise en circulation des véhicules

Die hier abgebildeten Mengen entsprechen den Originalflüssigkeitsmengen bei Erstzulassung.

Los valores indicados en este poster corresponden con las cantidades originales de fluido en el momento del lanzamiento del vehículo

I valori indicati in questa tabella corrispondono alla quantità originale di fluido al momento della commercializzazione del veicolo

De vermelde hoeveelheden koudemiddel in deze tabel komen overeen met de voorgeschreven gegevens opgegeven door de constructeur.

WartoÁci podane w tej tabeli odpowiadają pierwotnej iloÁci płynu w momencie wyprodukowania pojazdu

Valorile indicate pe acest tablou corespond cantitatatilor fluidului de origine cand s-a pus in circulatie vehiculele.

Οι τιμές που αναφέρονται στο διάγραμμα, ανταποκρίνονται στην ποσότητα του ψυκτικού που υπήρχε στο αυτοκίνητο αρχικά, από το εργοστάσιο.

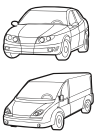

		GAZ			Valeo
ALFA ROMEO					
33	1983-1994	R12>R134a*	1150 g	MIN ISO 100 (1) cc	**699936**
33 D-TURBO	1986-1994	R12>R134a*	900 g	MIN ISO 100 (1) cc	**699936**
145 / 146 1.3. 1.4. 1.6. 1.7	1994-1997	R134a	700 g	PAG ISO 46 240 cc ±15	**699935**
145 / 146 1.9 JTD	1998-2001	R134a	(1) g	PAG ISO 100 130 cc	**699936**
145 / 146 D-TURBO	1994-2001	R134a	700 g	PAG ISO 125 236 cc ±15	**699937**
145 / 146 TWIN SPARK	1996-2001	R134a	700 g	PAG ISO 100 150 cc ±20	**699936**
147	2001-2010	R134a	550 g ±25	PAG ISO 46 130 cc	**699935**
155	1992-1993	R12>R134a*	950 g	MIN ISO 100 135 cc	**699936**
155	1994-1997	R134a	700 g	PAG ISO 46 240 cc ±15	**699935**
155 1.6. 1.8. 2.0 16V	1995-1997	R134a	700 g	PAG ISO 100 290 cc ±30	**699936**
155 1.9 DIESEL	1993-1997	R134a	700 g	PAG ISO 125 236 cc	**699937**
156	1997-2006	R134a	650 g	PAG ISO 100 145 cc	**699936**
156 1.9 JTD	1997-2006	R134a	650 g	PAG ISO 100 130 cc	**699936**
156 2.4 JTD	1997-2006	R134a	650 g	PAG ISO 100 150 cc	**699936**
159	2005-2011	R134a	550 g	PAG ISO 46 (1) cc	**699935**
164	1987-1993	R12>R134a*	1250 g	MIN ISO 100 (1) cc	**699936**
164	1994-1998	R134a	1200 g	PAG ISO 100 135 cc ±15	**699936**
166	1998-2001	R134a	700 g	PAG ISO 46 135 cc	**699935**
166	2001-2006	R134a	650 g	PAG ISO 46 135 cc	**699935**
BRERA	2006-	R134a	550 g	PAG ISO 46 130 cc	**699935**
GIULIETTA (940)	2010-	R134a	450 g ±20	PAG ISO 61 130 cc	**699936**
GT 1.9 JTD	2003-2006	R134a	600 g ±40	PAG ISO 46 110 cc	**699935**
GTV 3.0 V6 24V	1997-06.1999	R134a	700 g	PAG ISO 46 285 cc	**699935**
GTV 3.0 V6 24V	06.1999-2004	R134a	575 g	PAG ISO 46 285 cc	**699935**
MITO (955)	2008-	R134a	500 g ±40	PAG ISO 46 130 cc	**699935**
SPIDER / GTV 1.8	1998-2001	R134a	650 g ±50	PAG ISO 46 290 cc ±30	**699935**
SPIDER / GTV 2.0	1996-2005	R134a	650 g ±50	PAG ISO 100 290 cc ±30	**699936**
SPIDER / GTV V6	1996-2005	R134a	650 g ±50	PAG ISO 46 240 cc ±15	**699935**
SPIDER (939)	2006-	R134a	460 g	PAG ISO 46 130 cc	**699935**
SPRINT	1987-1991	R12>R134a*	1150 g	MIN ISO 100 (1) cc	**699936**
AUDI					
80 / 90 / COUPE	1986-1991	R12>R134a*	1050 g ±50	MIN ISO 100 300 cc ±20	**699936**
80 / COUPE / CABRIO	1991-09.1992	R12>R134a*	700 g ±50	MIN ISO 100 300 cc ±20	**699936**
80 / COUPE / CABRIO 2.3	1991-09.1992	R12>R134a*	900 g ±50	MIN ISO 100 300 cc ±20	**699936**
80	10.1992-1995	R134a	675 g ±25	PAG ISO 46 275 cc ±25	**699935**
80 2.3	10.1992-1994	R134a	775 g ±25	PAG ISO 46 275 cc ±25	**699935**
100 / 200	08.1983-1991	R12>R134a*	1100 g ±50	MIN ISO 100 300 cc ±20	**699936**
100 / A6 / S4 / S6	1991-09.1992	R12>R134a*	1100 g ±50	MIN ISO 100 300 cc ±20	**699936**
100 / A6 / S4 / S6 Zexel	10.1992-1997	R134a	775 g ±25	PAG ISO 46 275 cc ±25	**699935**
100 / A6 / S4 / S6 Denso	10.1992-1997	R134a	775 g ±25	PAG ISO 46 275 cc ±25	**699935**
A1 (8X1) Sanden	2010-	R134a	500 g ±15	PAG ISO 46 110 cc ±10	**699935**
A1 (8X1) Delphi	2010-	R134a	500 g ±15	PAG ISO 46 110 cc ±10	**699935**
A2	2000-2001	R134a	525 g ±25	PAG ISO 46 180 cc ±15	**699935**
A2	2001-2006	R134a	505 g ±25	PAG ISO 46 180 cc ±15	**699935**

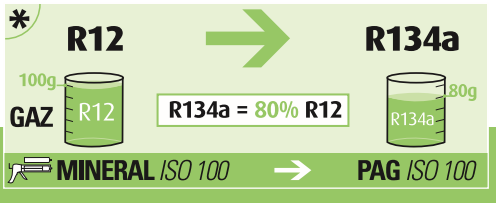

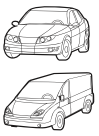

GAZ

Valeo

		GAZ				Valeo
AUDI (.../...)						
A3 Zexel	2003-	R134a	525 g ±25	PAG	ISO 46	180 cc ±10	**699935**
A3 Denso	2003-	R134a	525 g ±25	PAG	ISO 46	180 cc ±10	**699935**
A3 / S3	1996-2003	R134a	775 g ±25	PAG	ISO 46	135 cc ±15	**699935**
A4 / S4 Zexel	1994-11.1997	R134a	675 g ±25	PAG	ISO 46	275 cc ±25	**699935**
A4 / S4 Denso	1994-11.1997	R134a	675 g ±25	PAG	ISO 46	275 cc ±25	**699935**
A4 / S4 Zexel Showa	11.1997-2001	R134a	725 g ±25	PAG	ISO 46	275 cc ±25	**699935**
A4 / S4 Denso Showa	11.1997-2001	R134a	725 g ±25	PAG	ISO 46	275 cc ±25	**699935**
A4 / S4 Zexel AWG	11.1998-12.1998	R134a	575 g ±25	PAG	ISO 46	275 cc ±25	**699935**
A4 / S4 Denso AWG	11.1998-12.1998	R134a	575 g ±25	PAG	ISO 46	275 cc ±25	**699935**
A4 Zexel	12.2000-10.2004	R134a	505 g ±25	PAG	ISO 46	180 cc ±10	**699935**
A4 Denso	12.2000-10.2004	R134a	505 g ±25	PAG	ISO 46	180 cc ±10	**699935**
A4 (8E)	11.2004-10.2007	R134a	500 g ±20	PAG	ISO 46	120 cc ±10	**699935**
A4 (8E) RS4	11.2004-10.2007	R134a	440 g ±20	PAG	ISO 46	130 cc ±10	**699935**
A4 (8K)	11.2007-	R134a	600 g ±20	PAG	ISO 46	150 cc ±10	**699935**
A4 (8K)	08.2011-	R134a	600 g ±20	PAG	ISO 46	80 cc ±10	**699935**
A5	06.2007-	R134a	600 g ±20	PAG	ISO 46	150 cc ±10	**699935**
A5	08.2011-	R134a	600 g ±20	PAG	ISO 46	80 cc ±10	**699935**
A5 RS5	03.2010-	R134a	570 g ±20	PAG	ISO 46	150 cc ±10	**699935**
A6 Zexel	1997-11.1997	R134a	825 g ±25	PAG	ISO 46	275 cc ±25	**699935**
A6 Denso	1997-11.1997	R134a	825 g ±25	PAG	ISO 46	275 cc ±25	**699935**
A6 Zexel	11.1997-08.1998	R134a	875 g ±25	PAG	ISO 46	275 cc ±25	**699935**
A6 Denso	11.1997-08.1998	R134a	875 g ±25	PAG	ISO 46	275 cc ±25	**699935**
A6 Zexel 20 mm	08.1998-04.1999	R134a	775 g ±25	PAG	ISO 46	275 cc ±25	**699935**
A6 Denso 20 mm	08.1998-04.1999	R134a	775 g ±25	PAG	ISO 46	275 cc ±25	**699935**
A6 Zexel 16 mm	10.1998-12.1998	R134a	575 g ±25	PAG	ISO 46	275 cc ±25	**699935**
A6 Denso 16 mm	10.1998-12.1998	R134a	575 g ±25	PAG	ISO 46	275 cc ±25	**699935**
A6 Zexel 18 mm	04.1999-2001	R134a	675 g ±25	PAG	ISO 46	275 cc ±25	**699935**
A6 Denso 18 mm	04.1999-2001	R134a	675 g ±25	PAG	ISO 46	275 cc ±25	**699935**
A6 Zexel 18 mm	2001-2005	R134a	675 g ±25	PAG	ISO 46	275 cc ±25	**699935**
A6 Denso 18 mm	2001-2005	R134a	675 g ±25	PAG	ISO 46	275 cc ±25	**699935**
A6 Denso	2001-2005	R134a	575 g ±25	PAG	ISO 46	275 cc ±25	**699935**
A6 Zexel	2005-2011	R134a	530 g ±20	PAG	ISO 46	130 cc ±10	**699935**
A6 Denso	2005-2011	R134a	530 g ±20	PAG	ISO 46	130 cc ±10	**699935**
A6 2.0l Zexel	2001-2005	R134a	575 g ±25	PAG	ISO 46	275 cc ±25	**699935**
A6 2.0l. 3.0l Zexel	2005-2011	R134a	500 g ±20	PAG	ISO 46	120 cc ±10	**699935**
A6 2.0l. 3.0l Denso	2005-2011	R134a	500 g ±20	PAG	ISO 46	120 cc ±10	**699935**
A6	03.2011-	R134a	570 g ±20	PAG	ISO 46	120 cc ±10	**699935**
A6 V8 Zexel	1998-03.1999	R134a	575 g ±25	PAG	ISO 46	275 cc ±25	**699935**
A6 V8 Denso	1998-03.1999	R134a	575 g ±25	PAG	ISO 46	275 cc ±25	**699935**
A6 V8 Zexel	03.1999-2001	R134a	675 g ±25	PAG	ISO 46	275 cc ±25	**699935**
A6 V8 Denso	03.1999-2001	R134a	675 g ±25	PAG	ISO 46	275 cc ±25	**699935**
A6 V8 Zexel	2001-2005	R134a	675 g ±25	PAG	ISO 46	275 cc ±25	**699935**
A6 V8 Denso	2001-2005	R134a	675 g ±25	PAG	ISO 46	275 cc ±25	**699935**
A6 V8 Zexel	2004-2006	R134a	530 g ±20	PAG	ISO 46	130 cc ±10	**699935**

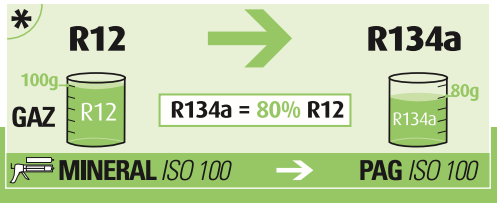

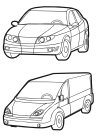

		GAZ				Valeo
AUDI (.../...)						
A6 V8 Denso	2004-2006	R134a	530 g ±20	PAG	ISO 46	130 cc ±10	**699935**
A7 SPORTBACK	10.2010-	R134a	570 g ±20	PAG	ISO 46	120 cc ±10	**699935**
A8 Zexel	1994-11.1997	R134a	775 g ±25	PAG	ISO 46	275 cc ±25	**699935**
A8 Denso	1994-11.1997	R134a	775 g ±25	PAG	ISO 46	275 cc ±25	**699935**
A8 Zexel	10.2002-01.2004	R134a	620 g ±20	PAG	ISO 46	200 cc ±10	**699935**
A8 Denso	10.2002-01.2004	R134a	620 g ±20	PAG	ISO 46	200 cc ±10	**699935**
A8 / S8 Zexel	11.1997-2003	R134a	825 g ±25	PAG	ISO 46	275 cc ±25	**699935**
A8 / S8 Denso	11.1997-2003	R134a	825 g ±25	PAG	ISO 46	275 cc ±25	**699935**
A8 (4E)	01.2004-10.2009	R134a	620 g ±20	PAG	ISO 46	150 cc ±10	**699935**
A8 (4E) 3.7L 4.2L without FSI	01.2004-10/2009	R134a	620 g ±20	PAG	ISO 46	200 cc ±10	**699935**
A8 (4H)	11.2009-	R134a	780 g ±20	PAG	ISO 46	130 cc ±10	**699935**
A8 (4H) with rear AC	11.2009-	R134a	930 g ±20	PAG	ISO 46	130 cc ±10	**699935**
A8 (4H) 4,0L 4,2L TDI	11.2009-	R134a	740 g ±15	PAG	ISO 46	180 cc ±10	**699935**
A8 (4H) 4,0L 4,2L TDI with rear AC	11.2009-	R134a	915 g ±15	PAG	ISO 46	180 cc ±10	**699935**
AVANT RS2	1994-1995	R134a	775 g ±25	PAG	ISO 46	275 cc ±25	**699935**
CABRIO	10.1992-2000	R134a	675 g ±25	PAG	ISO 46	275 cc ±25	**699935**
CABRIO 2.3	10.1992-1994	R134a	775 g ±25	PAG	ISO 46	275 cc ±25	**699935**
COUPE S2	1992-09.1992	R12>R134a*	900 g ±50	MIN	ISO 100	300 cc ±20	**699936**
COUPE S2 Zexel	10.1992-1996	R134a	775 g ±25	PAG	ISO 46	275 cc ±25	**699935**
COUPE S2 Denso	10.1992-1996	R134a	775 g ±25	PAG	ISO 46	275 cc ±25	**699935**
Q3 Sanden	2011-	R134a	520 g ±20	PAG	ISO 46	110 cc ±10	**699935**
Q3 Delphi	2011-	R134a	520 g ±20	PAG	ISO 46	110 cc ±10	**699935**
Q3 Denso	2011-	R134a	520 g ±20	PAG	ISO 46	90 cc ±10	**699935**
Q5	11.2008-	R134a	600 g ±20	PAG	ISO 46	150 cc ±10	**699935**
Q5	08.2011-	R134a	600 g ±20	PAG	ISO 46	80 cc ±10	**699935**
Q5 HYBRID	05.2011-	R134a	840 g ±20	PAG	ISO 46	160 cc ±10	**699935**
Q7 4,2FSI/3.0TDI	02.2006-	R134a	700 g ±50	PAG	ISO 46	145 cc ±15	**699935**
Q7 4,2FSI/3.0TDI With rear AC	02.2006-	R134a	1050 g ±50	PAG	ISO 46	245 cc ±15	**699935**
R8	4.2007-	R134a	650 g ±20	PAG	ISO 46	150 cc ±10	**699935**
TT	1998-2006	R134a	775 g ±25	PAG	ISO 46	135 cc ±15	**699935**
TT 1,8L 2,0L 3,2L Denso	10.2006-	R134a	525 g ±25	PAG	ISO 46	90 cc ±10	**699935**
TT 1,8L 2,0L 3,2L Sanden	10.2006-	R134a	525 g ±25	PAG	ISO 46	110 cc ±10	**699935**
TT 1,8L 2,0L 3,2L Delphi	10.2006-	R134a	525 g ±25	PAG	ISO 46	110 cc ±10	**699935**
TT 2,5L Denso	10.2006-	R134a	500 g ±25	PAG	ISO 46	90 cc ±10	**699935**
BMW						
1 SERIES (E87)	2004-2011	R134a	550 g ±15	PAG	(1)	(1) cc	
1 SERIES (F20)	06/2011-	R134a	550 g ±10	PAG	ISO 46	(1) cc	**699935**
3 SERIES (E30)	09.1985-1993	R12>R134a*	975 g ±25	MIN	ISO 100	200 (2) cc	**699936**
3 SERIES (E30)	1992-1993	R134a	800 g ±25	PAG	ISO 100	(1) cc	**699936**
3 SERIES (E36)	1991-1993	R12>R134a*	1200 g ±25	MIN	ISO 100	200 cc	**699936**
3 SERIES (E36) / COMPACT (E36) Denso round pipe	1993-2001	R134a	1000 g ±25	PAG	ISO 46	120 cc ±20	**699935**
3 SERIES (E36) / COMPACT (E36) Denso flat pipe	1993-2001	R134a	825 g ±25	PAG	ISO 46	120 cc ±20	**699935**
3 SERIES (E36) / COMPACT (E36) Seiko round pipe	1993-2001	R134a	1000 g ±25	PAG	ISO 100	150 cc ±10	**699936**
3 SERIES (E36) / COMPACT (E36) Seiko flat pipe	1993-2001	R134a	825 g ±25	PAG	ISO 100	150 cc ±10	**699936**

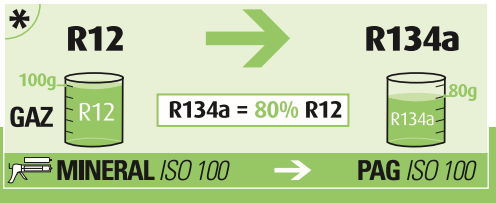

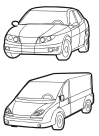

GAZ

Valeo

		GAZ				Valeo
BMW (.../...)						
3 SERIES (E46) Seiko	1998-2006	R134a	740 g ±25	PAG	ISO 100	150 cc ±10	**699936**
3 SERIES (E46) Diesel	1998-2006	R134a	680 g ±10	PAG	(1)	150 cc ±10	
3 SERIES (E90 / E91 / E92)	2005-2009	R134a	590 g ±10	PAG	(1)	(1) cc	
3 SERIES M3 (E30)	1987-1991	R12>R134a*	875 g ±25	MIN	ISO 100	200 (2) cc	**699936**
5 SERIES (E34) Denso round pipe	1993-1996	R134a	1550 g ±25	PAG	ISO 46	175 cc ±15	**699935**
5 SERIES (E34) Denso flat pipe	1993-1996	R134a	1450 g	PAG	ISO 46	175 cc ±15	**699935**
5 SERIES (E34) Seiko round pipe	1993-1996	R134a	1550 g ±25	PAG	ISO 100	185 cc ±5	**699936**
5 SERIES (E34) Seiko flat pipe	1993-1996	R134a	1450 g	PAG	ISO 100	185 cc ±5	**699936**
5 SERIES (E34)	1987-1993	R12>R134a*	1925 g ±25	MIN	ISO 100	200 (2) cc	**699936**
5 SERIES (E34) M5 / 524TD / 525TD / TDS	1987-1993	R12>R134a*	1500 g ±25	MIN	ISO 100	200 (2) cc	**699936**
5 SERIES (E39) Seiko	1996-09.1998	R134a	1225 g ±25	PAG	ISO 100	(1) cc	**699936**
5 SERIES (E39) Seiko	09.1998-2003	R134a	750 g ±10	PAG	ISO 100	(1) cc	**699936**
5 SERIES (E39) 525D / 530D Seiko	1998-2003	R134a	680 g ±10	PAG	ISO 100	(1) cc	**699936**
5 SERIES (E39) 525TD / TDS Seiko	1996-09.1998	R134a	1210 g ±25	PAG	ISO 100	(1) cc	**699936**
5 SERIES (E39) 525TD / TDS Seiko	09.1998-2003	R134a	1300 g ±10	PAG	ISO 100	(1) cc	**699936**
5 SERIES (E60 / E61) ENG. / MOT.M57	2003-2010	R134a	700 g ±10	PAG	(1)	(1) cc	
5 SERIES (E60 / E61) ENG. / MOT.N52 / N62	2003-2010	R134a	810 g ±10	PAG	(1)	(1) cc	
5 SERIES GRAND TOURISMO (F07)	10.2009-	R134a	850 g ±10	PAG	ISO 46	(1) cc	**699935**
5 SERIES (F10/F11)	03.2010-	R134a	850 g ±10	PAG	ISO 46	(1) cc	**699935**
6 SERIES (E24)	1976-1989	R12>R134a*	1100 g ±25	MIN	ISO 100	200 (2) cc	**699936**
6 SERIES (E24) With rear AC	1976-1989	R12>R134a*	1800 g ±25	MIN	ISO 100	200 (2) cc	**699936**
6 SERIES (E63/E64)	01.2004-02.2011	R134a	810 g ±10	PAG	ISO 46	180 cc ±10	**699935**
6 SERIES (F12/F13)	03.2011-	R134a	850 g ±10	PAG	ISO 46	(1) cc	**699935**
7 SERIES (E32)	1986-1993	R12>R134a*	1925 g ±25	MIN	ISO 100	200 (2) cc	**699936**
7 SERIES (E32) With rear AC	1986-1993	R12>R134a*	2075 g ±25	MIN	ISO 100	200 (2) cc	**699936**
7 SERIES (E32) Denso	1993-1994	R134a	1550 g ±25	PAG	ISO 46	175 cc ±15	**699935**
7 SERIES (E32) Seiko	1993-1994	R134a	1550 g ±25	PAG	ISO 100	180 cc ±20	**699936**
7 SERIES (E32) Denso with rear AC	1993-1994	R134a	1700 g ±25	PAG	ISO 46	195 cc ±15	**699935**
7 SERIES (E32) Seiko with rear AC	1993-1994	R134a	1700 g ±25	PAG	ISO 100	180 cc ±20	**699936**
7 SERIES (E38) Seiko	1994-09.1998	R134a	1210 g ±25	PAG	ISO 100	155 cc ±25	**699936**
7 SERIES (E38) Seiko	09.1998-2002	R134a	680 g ±10	PAG	ISO 100	155 cc ±25	**699936**
7 SERIES (E38) 725 TDS Seiko	1996-2002	R134a	1210 g ±25	PAG	ISO 100	155 cc ±25	**699936**
7 SERIES (E38) 750 IL Seiko	1994-2002	R134a	1270 g ±25	PAG	ISO 100	155 cc ±25	**699936**
7 SERIES (E38) 750 IL With rear AC Seiko	1994-2002	R134a	1400 g ±25	PAG	ISO 100	155 cc ±25	**699936**
7 SERIES (E65 / 66)	2002-2008	R134a	740 g ±25	PAG	(1)	(1) cc	
7 SERIES (E65 / 66) ENG. / MOT.M47 / M57	2002-2008	R134a	680 g ±10	PAG	ISO 46	(1) cc	**699935**
7 SERIES (E65 / 66) ENG. / MOT.N62	2002-2008	R134a	810 g ±10	PAG	ISO 46	(1) cc	**699935**
7 SERIES (F01/F02/F03/F04)	06.2008-	R134a	900 g ±10	PAG	ISO 46	(1) cc	**699935**
7 SERIES (F01/F02/F03/F04) with rear AC	06.2008-	R134a	1000 g ±10	PAG	ISO 46	(1) cc	**699935**
8 SERIES (E31)	1990-1993	R12>R134a*	1925 g ±25	MIN	ISO 100	(1) cc	**699936**
8 SERIES (E31) Denso	1993-1999	R134a	1550 g ±25	PAG	ISO 46	175 cc ±15	**699935**
X1 (E84)	10.2009-	R134a	590 g ±10	PAG	ISO 46	(1) cc	**699935**
X3 (E83)	2004-2009	R134a	810 g ±10	PAG	ISO 46	(1) cc	**699935**
X3 (E83) 2.0D 3.0D	2004-2009	R134a	700 g ±10	PAG	ISO 46	(1) cc	**699935**

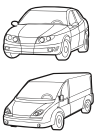

		GAZ				Valeo
BMW (.../...)						
X3 (F25)	09.2010-	R134a	425 g ±10	PAG	ISO 100 (1) cc	**699936**
X5 (E53)	2000-2007	R134a	440 g ±10	PAG	ISO 46 (1) cc	**699935**
X5 (E70)	02.2007-	R134a	700 g ±10	PAG	ISO 100 150 cc ±10	**699936**
X6 (E71) 3,0DX/3,5DX/3,5IX/5,0IX	2008-	R134a	700 g ±10	PAG	ISO 100 150 cc	**699936**
Z3 Denso round pipe	1997-2003	R134a	1000 g ±25	PAG	ISO 46 120 cc ±20	**699935**
Z3 Denso flat pipe	1997-2003	R134a	825 g ±25	PAG	ISO 46 120 cc ±20	**699935**
Z3 Seiko round pipe	1997-2003	R134a	1000 g ±25	PAG	ISO 100 150 cc ±10	**699936**
Z3 Seiko flat pipe	1997-2003	R134a	825 g ±25	PAG	ISO 100 150 cc ±10	**699936**
Z4 (E85)	2003-2009	R134a	740 g ±10	PAG	ISO 46 (1) cc	**699935**
Z4 (E89)	05.2009-	R134a	550 g ±10	PAG	ISO 46 (1) cc	**699935**
Z8 (E52)	06.2000-06.2003	R134a	710 g ±25	PAG	ISO 100 (1) cc	**699936**
CHEVROLET						
MATIZ	2006-2010	R134a	330 g ±20	PAG	ISO 46110 +/-10cc cc	**699935**
SPARK	2010-	R134a	450 g	PAG	ISO 105 110 cc	**699936**
AVEO Delphi	2006-2008	R134a	600 g ±20	PAG	ISO 150 220 cc	**699937**
AVEO Harrison V5	2006-2008	R134a	600 g ±20	PAG	ISO 150 220 cc	**699937**
AVEO Delphi and SP10	2006-2008	R134a	600 g ±20	PAG	ISO 150 150 cc	**699937**
AVEO Delphi	2008-2011	R134a	520 g	PAG	ISO 150 220 cc	**699937**
AVEO Harrison V5	2008-2011	R134a	520 g	PAG	ISO 150 220 cc	**699937**
AVEO Delphi and SP10	2008-2011	R134a	520 g	PAG	ISO 150 150 cc	**699937**
EPICA	2006-2010	R134a	820 g	PAG	ISO 46 220 cc	**699935**
CRUZE	2009-	R134a	650 g	PAG	ISO 46 125 cc	**699935**
CAPTIVA 2,4L. 3,2L.	2006-	R134a	660 g	PAG	ISO 61 150 cc	**699936**
CAPTIVA 2,0L	2006-	R134a	520 g	PAG	ISO 61 150 cc	**699936**
CHRYSLER						
300 C	09.2004-12.2010	R134a	740 g	PAG	ISO 46 180 cc	**699935**
CROSSFIRE	2003-2007	R134a	880 g	PAG	ISO 46 (1) cc	**699935**
NEON	1999-2004	R134a	765 g	PAG	ISO 46 180 cc	**699935**
NEON 1.8	1997-1999	R134a	784 g	PAG	ISO 46 200 cc	**699935**
NEON 2.0 16V	1995-1999	R134a	821 g	PAG	ISO 46 140 cc	**699935**
PT CRUISER	2000-2010	R134a	709 g	PAG	ISO 46 160 cc	**699935**
SEBRING (JR)	2001-2007	R134a	(1) g	PAG	ISO 46 (1) cc	**699935**
SEBRING	07.2007-	R134a	570 g	PAG	ISO 46 100 cc	**699935**
VOYAGER	1994-2000	R134a	960 g	PAG	ISO 46 150 cc	**699935**
VOYAGER With rear AC	1994-2000	R134a	1360 g	PAG	ISO 46 220 cc	**699935**
VOYAGER (RG) GAS	2000-2003	R134a	960 g	PAG	ISO 46 150 cc	**699935**
VOYAGER (RG) GAS with rear AC	2000-2003	R134a	1310 g	PAG	ISO 46 220 cc	**699935**
VOYAGER (RG) DIESEL	2000-2003	R134a	910 g	PAG	ISO 46 (1) cc	**699935**
VOYAGER (RG) GAS	2003-2006	R134a	880 g	PAG	ISO 46 150 cc	**699935**
VOYAGER (RG) GAS with rear AC	2003-2006	R134a	1220 g	PAG	ISO 46 220 cc	**699935**
VOYAGER (RG) DIESEL	2003-2006	R134a	790 g	PAG	ISO 46 (1) cc	**699935**
GRAND VOYAGER	10.2007-	R134a	820 g	PAG	ISO 46 120 cc	**699935**
GRAND VOYAGER with rear AC	10.2007-	R134a	1150 g	PAG	ISO 46 150 cc	**699935**

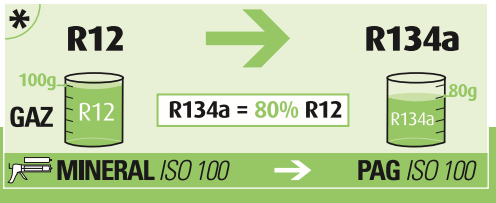

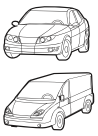

GAZ

Valeo

		GAZ				Valeo
CITROËN						
AX LHD	1991-1994	R12>R134a*	725 g ±25	MIN	ISO 100	100 cc	**699936**
AX RHD	1991-1994	R12>R134a*	900 g ±50	MIN	ISO 100	100 cc	**699936**
AX II	1994-1997	R134a	625 g ±25	PAG	ISO 100	135 cc	**699936**
BERLINGO	1996-2006	R134a	875 g ±25	PAG	ISO 46	135 cc ±15	**699935**
BERLINGO DIESEL	1996-2006	R134a	775 g ±25	PAG	ISO 46	135 cc ±15	**699935**
BX	1987-1994	R12>R134a*	1000 g	MIN	ISO 100	135 cc	**699936**
BX 1.7D TURBO	1988-1994	R12>R134a*	800 g	MIN	ISO 100	135 cc	**699936**
BX 1.9 GTI 16V ENG. / MOT. XU9J4	1987-1993	R12>R134a*	800 g	MIN	ISO 100	135 cc	**699936**
C-CROSSER	02.2007-	R134a	500 g	PAG	ISO 46	80 cc	**699935**
C-ZERO	10.2010-	R134a	325 g	PAG	ISO 46	100 cc	**699935**
C1	2005-2009	R134a	450 g ±25	PAG	ISO 100	80 cc	**699936**
C1 DIESEL	2005-2009	R134a	500 g ±25	PAG	ISO 100	80 cc	**699936**
C2	2003-2009	R134a	600 g ±25	PAG	ISO 46	135 cc	**699935**
C3	2002-2009	R134a	625 g ±50	PAG	ISO 46	135 cc	**699935**
C3	11.2009-	R134a	500 g	PAG	ISO 46	135 cc	**699935**
C3 PICASSO	02.2009-	R134a	500 g	PAG	ISO 46	135 cc	**699935**
C4	2002-2009	R134a	450 g ±25	PAG	ISO 46	135 cc	**699935**
C4	11.2009-	R134a	450 g	PAG	ISO 46	135 cc	**699935**
C4 PICASSO	2006-	R134a	480 g ±25	PAG	ISO 46	135 cc	**699935**
C4 PICASSO With rear AC	2006-	R134a	675 g ±25	PAG	ISO 46	135 cc	**699935**
C4 GRAND PICASSO	10.2006-	R134a	450 g	PAG	ISO 46	135 cc	**699935**
C5	2000-2004	R134a	675 g ±25	PAG	ISO 46	135 cc	**699935**
C5	2004-	R134a	625 g ±25	PAG	ISO 46	135 cc	**699935**
C5 2.0 HDI	2000-2004	R134a	675 g ±25	PAG	ISO 125	265 cc	**699937**
C5 II ENG. / MOT. DT17 / DW12	2008-	R134a	625 g ±25	PAG	ISO 46	135 cc	**699935**
C5 II ENG. / MOT. DT17 / DW12	2008-	R134a	525 g ±25	PAG	ISO 46	135 cc	**699935**
C6 2.2 HDI 2.7 HDI	2005-2009	R134a	525 g ±25	PAG	ISO 46	135 cc	**699935**
C6 3.0I V6	2005-2009	R134a	625 g ±25	PAG	ISO 46	135 cc ±10	**699935**
C8	2002-	R134a	600 g ±25	PAG	ISO 46	135 cc ±15	**699935**
DS3	04.2010-	R134a	500 g	PAG	ISO 100	135 cc	**699936**
DS4 Sanden	04.2011-	R134a	425 g	PAG	ISO 46	135 cc	**699935**
DS4 Denso	04.2011-	R134a	425 g	PAG	ISO 46	117,5 cc	**699935**
DS5	11.2011-	R134a	450 g	PAG	ISO 100	(1) cc	**699936**
DS5 eng. / mot. DV6C with particle filter	11.2011-	R134a	475 g	PAG	ISO 100	(1) cc	**699936**
DS5 eng. / mot. DW10CTED4 with particle filter	11.2011-	R134a	475 g	PAG	ISO 100	(1) cc	**699936**
EVASION / SYNERGIE	1994-2002	R134a	975 g ±25	PAG	ISO 46	135 cc ±15	**699935**
JUMPER / RELAY	10.1996-2002	R134a	800 g ±50	PAG	ISO 100	135 cc	**699936**
JUMPER / RELAY With rear AC	10.1996-2002	R134a	1000 g ±50	PAG	ISO 100	135 cc	**699936**
JUMPER / RELAY (2002-)	2002-2006	R134a	800 g ±50	PAG	ISO 100	135 cc	**699936**
JUMPER / RELAY (2002-) With rear AC	2002-2006	R134a	1000 g ±50	PAG	ISO 100	135 cc	**699936**
JUMPY / DISPATCH	1995-2006	R134a	975 g ±25	PAG	ISO 46	135 cc ±15	**699935**
JUMPY / DISPATCH Single A/C	2008-	R134a	540 g	PAG	ISO 46	135 cc	**699935**
JUMPY / DISPATCH Double A/C. Short	2008-	R134a	840 g	PAG	ISO 46	160 cc	**699935**
JUMPY / DISPATCH Double A/C. Long	2008-	R134a	940 g	PAG	ISO 46	160 cc	**699935**

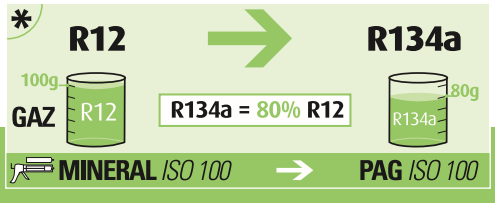

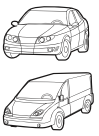

		GAZ				Valeo
CITROËN (.../...)						
NEMO	02.2008-	R134a	500 g	PAG	ISO 46	135 cc	**699935**
SAXO	1996-03.1996	R134a	600 g ±25	PAG	ISO 46	135 cc ±15	**699935**
SAXO	04.1996-2003	R134a	775 g ±25	PAG	ISO 46	135 cc ±15	**699935**
XANTIA Sanden SD7H15	1993-2001	R134a	775 g ±25	PAG	ISO 100	135 cc	**699936**
XANTIA Sanden SD7V16 16 mm	1993-2001	R134a	875 g ±25	PAG	ISO 46	135 cc	**699935**
XANTIA Sanden SD7V16 23 mm	1993-2001	R134a	975 g ±25	PAG	ISO 46	135 cc	**699935**
XANTIA 1.9D. 1.9D TURBO	02.1996-2001	R134a	825 g ±25	PAG	ISO 125	265 cc ±15	**699937**
XANTIA 3.0	1997-2001	R134a	725 g ±25	PAG	ISO 46	135 cc	**699935**
XM	1989-09.1993	R12>R134a*	1050 g ±50	MIN	ISO 100	135 cc	**699936**
XM	1996-2001	R134a	725 g ±25	PAG	ISO 46	135 cc	**699935**
XM 2.0	10.1993-1996	R134a	725 g ±25	PAG	ISO 100	135 cc	**699936**
XM 2.1. 2.2 DIESEL	10.1993-1996	R134a	725 g ±25	PAG	ISO 100	135 cc	**699936**
XM 2.5 DIESEL	1994-1996	R134a	825 g ±25	PAG	ISO 100	135 cc	**699936**
XM 2.5 DIESEL	1996-2001	R134a	825 g ±25	PAG	ISO 46	135 cc	**699935**
XSARA	1997-1999	R134a	975 g ±25	PAG	ISO 46	135 cc	**699935**
XSARA (2000-)	2000-2006	R134a	565 g ±25	PAG	ISO 46	135 cc	**699935**
XSARA (2000-) 2.0 ENG. / MOT. XU10	2000-2004	R134a	700 g ±25	PAG	ISO 46	135 cc	**699935**
XSARA DIESEL	1997-1999	R134a	875 g ±25	PAG	ISO 46	135 cc ±15	**699935**
XSARA PICASSO	1999-	R134a	675 g ±50	PAG	ISO 46	135 cc	**699935**
ZX	1993-1998	R134a	925 g ±25	PAG	ISO 100	135 cc	**699936**
ZX ENG. / MOT. TU	1991-1993	R12>R134a*	900 g ±25	MIN	ISO 100	135 cc	**699936**
ZX ENG. / MOT. XU	1991-1993	R12>R134a*	1000 g ±25	MIN	ISO 100	135 cc	**699936**
DACIA						
DUSTER	04.2010-	R134a	475 g	PAG	ISO 46	135 cc	**699935**
LOGAN	2005-	R134a	750 g ±35	PAG	ISO 46	135 cc	**699935**
LOGAN MCV	02.2007-	R134a	780 g	PAG	ISO 46	135 cc	**699935**
LOGAN PICKUP/EXPRESS	03.2008-	R134a	780 g	PAG	ISO 46	135 cc	**699935**
SANDERO	06.2008-	R134a	475 g	PAG	ISO 46	135 cc	**699935**
DAEWOO						
ESPERO	1995-1997	R134a	730 g ±20	PAG	ISO 125	240 cc	**699937**
EVANDA	2002-2005	R134a	730 g ±20	PAG	ISO 125	265 cc	**699937**
KALOS	2002-2005	R134a	600 g ±20	PAG	ISO 125	220 cc	**699937**
KORANDO / MUSSO	1999-2002	R134a	700 g ±50	PAG	ISO 100	(1) cc	**699936**
LACETTI	02.2004-	R134a	640 g ±20	PAG	ISO 150	220 cc	**699937**
LANOS	1997-2001	R134a	720 g ±20	PAG	ISO 125	265 cc	**699937**
LANOS	2001-2003	R134a	720 g ±20	PAG	ISO 125	220 cc	**699937**
LEGANZA	1997-2002	R134a	830 g ±20	PAG	ISO 125	265 cc	**699937**
MATIZ	1998-2002	R134a	550 g ±25	PAG	ISO 46	150 cc	**699935**
MATIZ	2002-2004	R134a	330 g			110 cc	**699935**
NEXIA	1995-1997	R134a	730 g ±20	PAG	ISO 125	240 cc	**699937**
NUBIRA / LACETTI LHD	2003-2005	R134a	640 g ±20	PAG	ISO 125	220 cc	**699937**
NUBIRA / LACETTI RHD	2003-2005	R134a	680 g ±20	PAG	ISO 125	220 cc	**699937**
NUBIRA LHD	1997-2003	R134a	750 g ±50	PAG	ISO 125	265 cc	**699937**
NUBIRA RHD	1997-2003	R134a	820 g	PAG	ISO 125	265 cc	**699937**

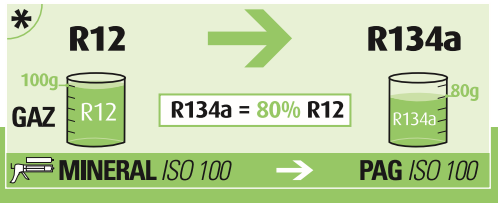

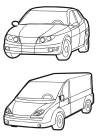

GAZ

Valeo

		GAZ				
DAEWOO (.../...)						
REXTON	2002-2004	R134a	850 g ±50	PAG	ISO 125	265 cc	**699937**
REXTON With rear AC	2002-2004	R134a	1200 g ±50	PAG	ISO 125	265 cc	**699937**
TACUMA / REZZO LHD	2001-2008	R134a	750 g ±50	PAG	ISO 125	220 cc	**699937**
TACUMA / REZZO RHD	2001-2008	R134a	820 g ±20	PAG	ISO 125	220 cc	**699937**
DAF						
45	1996-2001	R134a	1000 g	PAG	ISO 46	175 cc	**699935**
45 LF	2001-2011	R134a	1000 g	PAG	ISO 46	175 cc	**699935**
55 LF	2001-2011	R134a	1000 g	PAG	ISO 46	175 cc	**699935**
65	1990-1993	R134a	850 g	PAG	ISO 46	135 cc	**699935**
65 CF	2001-2011	R134a	850 g	PAG	ISO 46	175 cc	**699935**
75	1990-1993	R134a	900 g	PAG	ISO 46	175 cc	**699935**
75 CF	2001-2011	R134a	850 g	PAG	ISO 46	135 cc	**699935**
85	1991-1993	R134a	900 g	PAG	ISO 46	175 cc	**699935**
85 CF	2001-2011	R134a	850 g	PAG	ISO 46	135 cc	**699935**
95	1991-1993	R134a	1000 g	PAG	ISO 46	175 cc	**699935**
95 XF	1997-2003	R134a	700 g	PAG	ISO 46	135 cc	**699935**
DAF						
XF 95	2002-2006	R134a	700 g	PAG	ISO 46	135 cc	**699935**
XF 105	2006-	R134a	700 g	PAG	ISO 46	135 cc	**699935**
DAIHATSU						
CHARADE	2003-2011	R134a	300 g ±30	PAG	ISO 46	(1) cc	**699935**
CUORE	2003-2007	R134a	300 g ±30	PAG	ISO 46	(1) cc	**699935**
COPEN	2003-	R134a	350 g ±30	PAG	ISO 46	(1) cc	**699935**
CUORE	2007-	R134a	300 g	PAG	ISO 46	(1) cc	**699935**
MATERIA	2006-	R134a	350 g	PAG	ISO 46	70 cc	**699935**
SIRION	2005-	R134a	300 g ±30	PAG	ISO 46	(1) cc	**699935**
TERIOS	2005-	R134a	350 g	PAG	ISO 46	(1) cc	**699935**
TREVIS	2006-	R134a	300 g	PAG	ISO 46	(1) cc	**699935**
FIAT						
500	2007-	R134a	500 g ±40	PAG	ISO 46	75 cc	**699935**
BARCHETTA	1996-2006	R134a	600 g	PAG	ISO 100	160 cc ±10	**699936**
BRAVA / BRAVO Denso	1995-2002	R134a	637 g ±12	PAG	ISO 100	160 cc ±10	**699936**
BRAVA / BRAVO Harrison V5	1995-2002	R134a	650 g ±25	PAG	ISO 125	236 cc	**699937**
BRAVA / BRAVO Scroll SCS08	1998-2002	R134a	650 g ±25	PAG	ISO 46	80 cc ±20	**699935**
BRAVA / BRAVO TV 14SC	1999-2002	R134a	650 g ±25	PAG	ISO 100	150 cc ±20	**699936**
BRAVO	2007-	R134a	500 g	PAG	ISO 46	130 cc	**699935**
CINQUECENTO	1991-1997	R134a	700 g	PAG	ISO 46	100 cc	**699935**
CINQUECENTO SPORTING	1994-1998	R134a	550 g	PAG	ISO 46	100 cc	**699935**
COUPE 1.8	1996-2000	R134a	740 g	PAG	ISO 100	160 cc ±10	**699936**
COUPE 16V	1994-1997	R134a	732 g ±12	PAG	ISO 100	135 cc	**699936**
COUPE 20V	1996-2000	R134a	500 g	PAG	ISO 100	150 cc ±20	**699936**
CROMA	1994-1997	R134a	1100 g	PAG	ISO 100	135 cc	**699936**
CROMA (2005-)	2005-2011	R134a	630 g ±40	PAG	ISO 46	120 cc ±15	**699935**
DOBLO / STRADA	2002-2010	R134a	625 g ±40	PAG	ISO 46	80 cc ±20	**699935**

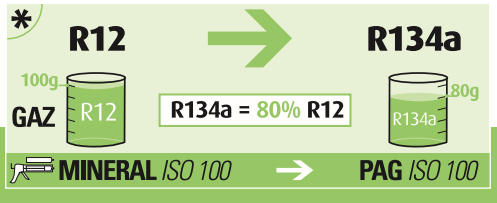

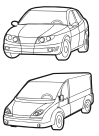

		GAZ					Valeo
FIAT (.../...)							
DOBLO	2010-	R134a	450 g ±25	PAG	ISO 46	120 cc	**699935**
DUCATO 2.2D/2.3D/3.0D	2006-	R134a	550 g ±40	PAG	ISO 46	190 cc	**699935**
DUCATO 2.2D/2.3D/3.0D With rear AC	2006-	R134a	950 g ±40	PAG	ISO 46	190 cc	**699935**
DUCATO (2002-)	2002-2006	R134a	820 g ±60	PAG	ISO 100	(1) cc	**699936**
DUCATO (2002-) With rear AC	2002-2006	R134a	1000 g ±40	PAG	ISO 100	(1) cc	**699936**
DUCATO / TALENTO	1994-2002	R134a	850 g ±50	PAG	ISO 100	(1) cc	**699936**
DUCATO / TALENTO With rear AC	1994-2002	R134a	1000 g ±50	PAG	ISO 100	(1) cc	**699936**
FIORINO	1997-2001	R134a	(1) g	PAG	ISO 46	150 cc ±10	**699935**
FIORINO	2008-	R134a	500 g	PAG	ISO 46	130 cc	**699935**
GRANDE PUNTO	2005-	R134a	500 g	PAG	ISO 46	130 cc	**699935**
IDEA	2003-	R134a	500 g ±40	PAG	ISO 46	130 cc	**699935**
LINEA	2007-	R134a	460 g ±40	PAG	ISO 46	130 cc	**699935**
MAREA / MARENGO TV12SC	1996-2003	R134a	600 g ±25	PAG	ISO 100	150 cc ±20	**699936**
MAREA / MARENGO 7SB16	1996-2003	R134a	600 g ±25	PAG	ISO 100	120 cc ±15	**699936**
MAREA / MARENGO Scroll SCS08	1996-2003	R134a	600 g ±25	PAG	ISO 46	80 cc ±20	**699935**
MAREA / MARENGO Sanden SD7V16	1996-2003	R134a	600 g ±25	PAG	ISO 46	135 cc	**699935**
MULTIPLA 1.6	1999-2010	R134a	650 g	PAG	ISO 125	265 cc	**699937**
MULTIPLA 1.6 With rear AC	1999-2010	R134a	850 g	PAG	ISO 125	300 cc	**699937**
MULTIPLA 1.9 JTD	1999-2010	R134a	650 g	PAG	ISO 100	130 cc	**699936**
PALIO	1997-2001	R134a	750 g	PAG	ISO 46	80 cc ±20	**699935**
PALIO	2002-	R134a	625 g ±40	PAG	ISO 46	80 cc ±20	**699935**
PALIO WEEKEND	2000-2001	R134a	750 g	PAG	ISO 100	107 cc ±7	**699936**
PALIO WEEKEND	2002-	R134a	625 g ±40	PAG	ISO 100	107 cc ±7	**699936**
PANDA (2003-)	2003-	R134a	500 g ±40	PAG	ISO 46	130 cc	**699935**
PUNTO	1993-1999	R134a	675 g ±25	PAG	ISO 100	150 cc ±20	**699936**
PUNTO 1.4 TURBO	1993-1999	R134a	675 g ±25	PAG	ISO 100	150 cc ±10	**699936**
PUNTO 1100	1993-1999	R134a	650 g ±25	PAG	ISO 46	80 cc ±20	**699935**
PUNTO II 1.2	1999-2003	R134a	550 g ±25	PAG	ISO 46	80 cc ±20	**699935**
PUNTO II 1.8 16V	1999-2003	R134a	550 g ±25	PAG	ISO 100	80 cc ±20	**699936**
PUNTO 1,2IL 1,9DL	2003-	R134a	550 g ±25	PAG	ISO 46	130 cc	**699935**
PUNTO 1,3 JTDL	2003-	R134a	500 g	PAG	ISO 46	130 cc	**699935**
PUNTO EVO	2009-	R134a	500 g	PAG	ISO 46	130 cc	**699935**
QUBO	2008-	R134a	500 g	PAG	ISO 46	130 cc	**699935**
SCUDO	1996-2007	R134a	975 g ±25	PAG	ISO 46	135 cc	**699935**
SCUDO	2007-	R134a	540 g	PAG	ISO 46	135 cc	**699935**
SCUDO with rear AC, long wheel base	2007-	R134a	850 g	PAG	ISO 46	160 cc	**699935**
SCUDO with rear AC, short wheel base	2007-	R134a	950 g	PAG	ISO 46	160 cc	**699935**
SEDICI 1,6IL	2006-	R134a	430 g	PAG	ISO 46	50 cc	**699935**
SEDICI 1,9DL	2006-	R134a	430 g	PAG	ISO 46	80 cc	**699935**
SEICENTO	1997-2009	R134a	500 g ±25	PAG	ISO 46	100 cc	**699935**
SIENA	1997-2003	R134a	750 g	PAG	ISO 100	107 cc ±7	**699936**
STILO	2001-2008	R134a	500 g ±40	PAG	ISO 46	(1) cc	**699935**
STRADA	1997-2001	R134a	750 g	PAG	ISO 46	80 cc ±20	**699935**
TEMPRA Sanden	1994-1997	R134a	730 g	PAG	ISO 46	240 cc	**699935**

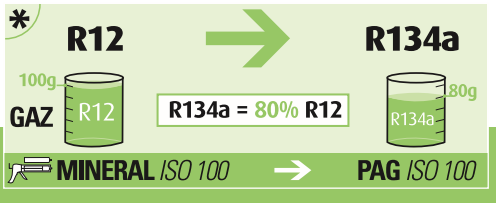

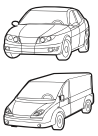

GAZ

Valeo

			GAZ				Valeo
FIAT (.../...)							
TEMPRA	Harrison V5	1994-1997	R134a	730 g	PAG	ISO 125	263 cc	**699937**
TEMPRA	Sanden	1994-1997	R134a	730 g	PAG	ISO 46	240 cc	**699935**
TEMPRA	Harrison V5	1994-1997	R134a	730 g	PAG	ISO 125	263 cc	**699937**
TIPO	Sanden	1994-1995	R134a	730 g	PAG	ISO 46	240 cc	**699935**
TIPO	Harrison V5	1994-1995	R134a	730 g	PAG	ISO 125	263 cc	**699937**
TIPO / TEMPRA	Sankyo	1987-1993	R12>R134a*	900 g ±50	MIN	ISO 100	135 cc	**699936**
TIPO / TEMPRA	Harrison V5	1987-1993	R12>R134a*	900 g ±50	MIN	ISO 100	236 cc	**699936**
ULYSSE (2002-)		2002-2006	R134a	600 g ±25	PAG	ISO 46	135 cc	**699935**
ULYSSE (94-2002)		1994-2002	R134a	975 g ±25	PAG	ISO 46	135 cc	**699935**
FORD							
COUGAR		1998-2002	R134a	740 g ±15	PAG	ISO 46	200 cc	**699935**
ESCORT		1994-2000	R134a	740 g ±15	PAG	ISO 46	160 cc	**699935**
ESCORT / ORION		1986-1990	R12>R134a*	700 g ±10	MIN	ISO 100	80 cc	**699936**
ESCORT / ORION		1990-1993	R12>R134a*	820 g ±10	MIN	ISO 100	80 cc	**699936**
FIESTA		1995-1999	R134a	740 g ±10	PAG	ISO 46	200 cc	**699935**
FIESTA		1999-2002	R134a	740 g ±15	PAG	ISO 46	200 cc	**699935**
FIESTA / CLASSIC		1994-1996	R134a	740 g ±15	PAG	ISO 46	100 cc	**699935**
FIESTA / FUSION		2002-2008	R134a	650 g ±13	PAG	ISO 46	207 cc	**699935**
FIESTA 1,25I 1,4I 1,6TI		2008-	R134a	390 g ±10	PAG	ISO 46	170 cc	**699935**
FIESTA 1,4 TDCI		2008-	R134a	390 g ±10	PAG	ISO 46	120 cc	**699935**
FIESTA 1,6 TDCI		2008-	R134a	550 g ±25	PAG	ISO 46	120 cc	**699935**
FOCUS		1998-2005	R134a	740 g ±15	PAG	ISO 46	200 cc	**699935**
FOCUS C-MAX	30 mm	2003-2007	R134a	740 g ±15	PAG	ISO 46	200 cc	**699935**
FOCUS C-MAX	12 mm	2003-2007	R134a	600 g ±15	PAG	ISO 46	200 cc	**699935**
C-MAX	30 mm	2007-2010	R134a	740 g	PAG	ISO 46	200 cc	**699935**
C-MAX	12 mm	2007-2010	R134a	600 g	PAG	ISO 46	200 cc	**699935**
C-MAX 1,6 TDCI		2010-	R134a	460 g	PAG	ISO 46	110 cc	**699935**
C-MAX 1,6SCTI 2,0TDCI		2010-	R134a	530 g	PAG	ISO 46	150 cc	**699935**
GRAND C-MAX 1,6 TDCI		2010-	R134a	460 g	PAG	ISO 46	110 cc	**699935**
GRAND C-MAX 1,6SCTI 2,0TDCI		2010-	R134a	530 g	PAG	ISO 46	150 cc	**699935**
FOCUS II		2005-2011	R134a	600 g ±15	PAG	ISO 46	200 cc	**699935**
FOCUS 3 1,6TDCI		2011-	R134a	460 g ±15	PAG	ISO 46	110 cc	**699935**
FOCUS 3 2,0L.TDCI 2,0L.HE 1,6L. TI-VCT 1,6L. SCTI		2011-	R134a	530 g ±15	PAG	ISO 46	150 cc	**699935**
GALAXY 2.0. 2.3		1995-2000	R134a	975 g ±25	PAG	ISO 46	205 cc	**699935**
GALAXY 2.0. 2.3	With rear AC	1995-2000	R134a	1375 g ±25	PAG	ISO 46	240 cc	**699935**
GALAXY 2.0. 2.3		2000-2006	R134a	725 g ±25	PAG	ISO 46	200 cc	**699935**
GALAXY 2.0. 2.3	With rear AC	2000-2006	R134a	1075 g ±25	PAG	ISO 46	240 cc	**699935**
GALAXY 2.8. 1.9 TDI		1995-2000	R134a	975 g ±25	PAG	ISO 46	135 cc	**699935**
GALAXY 2.8. 1.9 TDI	With rear AC	1995-2000	R134a	1375 g ±25	PAG	ISO 46	240 cc	**699935**
GALAXY 2.8. 1.9 TDI		2000-2006	R134a	725 g ±25	PAG	ISO 46	135 cc	**699935**
GALAXY 2.8. 1.9 TDI		2000-2006	R134a	1075 g ±25	PAG	ISO 46	240 cc	**699935**
GALAXY		2006-	R134a	600 g ±15	PAG	ISO 46	200 cc	**699935**
GALAXY	With rear AC	2006-	R134a	850 g ±15	PAG	ISO 46	250 cc	**699935**
GALAXY		1985-1993	R12>R134a*	775 g ±10	MIN	ISO 100	(1) cc	**699936**

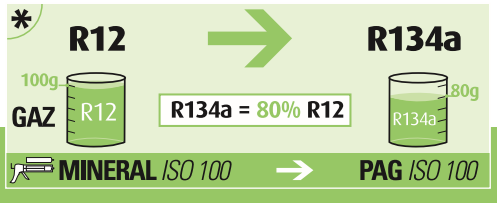

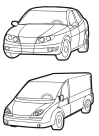

			GAZ				Valeo
FORD (.../...)							
KA		1996-2008	R134a	650 g ±13	PAG	ISO 46	200 cc	**699935**
KA		2009-	R134a	500 g	PAG	ISO 46	95 cc	**699935**
KUGA		2008-	R134a	600 g ±15	PAG	ISO 46	200 cc	**699935**
MAVERICK		1993-1998	R134a	750 g ±10	PAG	ISO 46	200 cc	**699935**
MONDEO		1993-2000	R134a	740 g ±15	PAG	ISO 46	200 cc	**699935**
MONDEO II		2000-2006	R134a	820 g ±17	PAG	ISO 46	200 cc	**699935**
MONDEO III		2007-	R134a	520 g ±10	PAG	ISO 46	200 cc	**699935**
PROBE		1994-1998	R134a	1000 g ±165	PAG	ISO 46	200 cc	**699935**
PUMA		1997-2002	R134a	740 g ±10	PAG	ISO 46	200 cc	**699935**
RANGER		1999-2006	R134a	550 g	PAG	ISO 46	180 cc	**699935**
RANGER		2006-	R134a	550 g ±25	PAG	ISO 46	180 cc	**699935**
SCORPIO		1994-1998	R134a	1000 g ±20	PAG	ISO 46	160 cc	**699935**
SIERRA		1987-1993	R12>R134a*	850 g ±20	MIN	ISO 100	(1) cc	**699936**
SPORT KA / STREET KA		2003-2008	R134a	650 g ±13	PAG	ISO 46	200 cc	**699935**
TOURNEO CONNECT		2002-	R134a	740 g ±15	PAG	ISO 46	200 cc	**699935**
TRANSIT		1994-2000	R134a	900 g ±15	PAG	ISO 46	200 cc	**699935**
TRANSIT	With rear AC	1994-08.1997	R134a	1400 g ±25	PAG	ISO 46	250 cc	**699935**
TRANSIT	With rear AC	09.1997-2000	R134a	1200 g ±25	PAG	ISO 46	250 cc	**699935**
TRANSIT		2000-2005	R134a	740 g ±20	PAG	ISO 46	(1) cc	**699935**
TRANSIT	With rear AC	2000-2005	R134a	1560 g ±30	PAG	ISO 46	(1) cc	**699935**
TRANSIT CONNECT		2002-2006	R134a	740 g ±15	PAG	ISO 46	200 cc	**699935**
TRANSIT / TOURNEO		2006-	R134a	750 g ±20	PAG	ISO 46	280 cc	**699935**
TRANSIT / TOURNEO	With rear AC	2006-	R134a	1400 g ±34	PAG	ISO 46	640 cc	**699935**
S-MAX		2006-	R134a	600 g ±15	PAG	ISO 46	200 cc	**699935**
S-MAX	With rear AC	2006-	R134a	850 g ±15	PAG	ISO 46	250 cc	**699935**
HONDA							
ACCORD (2003-) 2.0. 2.4		2003-2008	R134a	550 g ±50	PAG	ISO 46	130 cc	**699935**
ACCORD (2003-) 2.2 DIESEL		2003-2008	R134a	475 g ±25	PAG	ISO 46	160 cc	**699935**
ACCORD		2008-	R134a	475 g	PAG	ISO 46	185 cc	**699935**
ACCORD (89-93)		1992-1993	R12>R134a*	825 g ±25	MIN	ISO 100	105 cc ±15	**699936**
ACCORD (93-98)	Denso	1993-1998	R134a	725 g ±25	PAG	ISO 46	160 cc	**699935**
ACCORD (93-98)	Hadsys	1993-1998	R134a	725 g ±25	PAG	ISO 46	160 cc	**699935**
ACCORD (93-98) DIESEL LHD		1996-1998	R134a	650 g	PAG	ISO 46	135 cc	**699935**
ACCORD (93-98) DIESEL RHD		1996-1998	R134a	700 g	PAG	ISO 46	135 cc	**699935**
ACCORD (98-2003)	Denso	1998-2003	R134a	525 g ±25	PAG	ISO 46	160 cc	**699935**
ACCORD (98-2003)	Sanden	1998-2003	R134a	525 g ±25	PAG	ISO 46	130 cc	**699935**
ACCORD AERODECK / COUPE		1992-1993	R12>R134a*	825 g ±25	MIN	ISO 100	105 cc ±15	**699936**
ACCORD AERODECK / COUPE	Denso	1994-1997	R134a	625 g ±25	PAG	ISO 46	160 cc	**699935**
ACCORD AERODECK / COUPE	Hadsys	1994-1997	R134a	625 g ±25	PAG	ISO 46	160 cc	**699935**
ACCORD COUPE (98-2002)		1998-2002	R134a	625 g ±25	PAG	ISO 46	167 cc ±7	**699935**
CIVIC		2000-2006	R134a	525 g ±25	PAG	ISO 46	140 cc ±10	**699935**
CIVIC 1,4I 1,6I 1,8I 2,0I		2006-	R134a	465 g ±15	PAG	ISO 46	80 cc	**699935**
CIVIC 2,2D		2006-	R134a	465 g ±15	PAG	ISO 46	85 cc	**699935**
CIVIC	Denso	1991-1993	R12>R134a*	625 g ±25	MIN	ISO 100	80 cc	**699936**

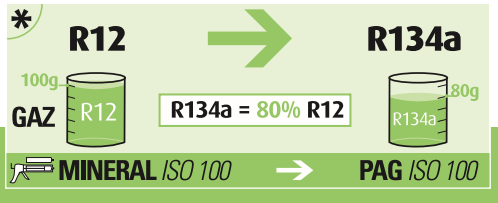

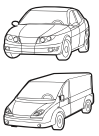

GAZ

Valeo

			GAZ				Valeo
HONDA (.../...)							
CIVIC	Matsushita	1991-1993	R12>R134a*	625 g ±25	MIN	ISO 100	140 cc	**699936**
CIVIC	Sanden	1991-1993	R12>R134a*	625 g ±25	MIN	ISO 100	120 cc	**699936**
CIVIC	Denso	1994-1995	R134a	525 g ±25	PAG	ISO 46	120 cc	**699935**
CIVIC	Matsushita	1994-1995	R134a	525 g ±25	PAG	ISO 46	140 cc	**699935**
CIVIC	Sanden	1994-1995	R134a	525 g ±25	PAG	ISO 46	120 cc	**699935**
CIVIC / SHUTTLE	Denso	1988-1991	R12>R134a*	900 g ±50	MIN	ISO 100	80 cc	**699936**
CIVIC / SHUTTLE	Matsushita	1988-1991	R12>R134a*	900 g ±50	MIN	ISO 100	130 cc	**699936**
CIVIC 1.7 CTDI		2001-2006	R134a	525 g ±25	PAG	ISO 46	145 cc ±5	**699935**
CIVIC 2 / 3 / 4 DOOR	Denso	1996-2001	R134a	625 g ±25	PAG	ISO 46	140 cc	**699935**
CIVIC 2 / 3 / 4 DOOR	Sanden	1996-2001	R134a	625 g ±25	PAG	ISO 46	130 cc	**699935**
CIVIC		1995-1997	R134a	525 g ±25	PAG	ISO 46	120 cc	**699935**
CIVIC	Denso	1997-2000	R134a	525 g ±25	PAG	ISO 46	120 cc	**699935**
CIVIC	Sanden	1997-2000	R134a	525 g ±25	PAG	ISO 46	130 cc	**699935**
CIVIC DIESEL LHD		1997-2000	R134a	640 g	PAG	ISO 46	135 cc	**699935**
CIVIC DIESEL RHD		1997-2000	R134a	560 g	PAG	ISO 46	135 cc	**699935**
CONCERTO		1990-1992	R12>R134a*	900 g ±50	MIN	ISO 100	130 cc	**699936**
CONCERTO		1993-1995	R134a	775 g ±25	PAG	ISO 46	120 cc	**699935**
CRV (2002-2006) 2.2 DIESEL		2002-2006	R134a	475 g ±25	PAG	ISO 46	160 cc	**699935**
CRV (2002-2006) LHD		2002-2006	R134a	675 g ±25	PAG	ISO 46	140 cc ±10	**699935**
CRV (2002-2006) RHD		2002-2006	R134a	505 g ±25	PAG	ISO 46	140 cc ±10	**699935**
CRV		2006-	R134a	465 g	PAG	ISO 46	85 cc	**699935**
CRV (97-2002) LHD		1997-2002	R134a	675 g ±25	PAG	ISO 46	140 cc ±10	**699935**
CRV (97-2002) RHD		1997-2002	R134a	625 g ±25	PAG	ISO 46	140 cc ±10	**699935**
CRX	Denso	1992-1993	R12>R134a*	625 g ±25	MIN	ISO 100	80 cc	**699936**
CRX	Matsushita	1992-1993	R12>R134a*	625 g ±25	MIN	ISO 100	140 cc	**699936**
CRX	Sanden	1992-1993	R12>R134a*	625 g ±25	MIN	ISO 100	120 cc	**699936**
CRX	Denso	1994-1997	R134a	525 g ±25	PAG	ISO 46	120 cc	**699935**
CRX	Matsushita	1994-1997	R134a	525 g ±25	PAG	ISO 46	140 cc	**699935**
CRX	Sanden	1994-1997	R134a	525 g ±25	PAG	ISO 46	120 cc	**699935**
FRV	Sanden	2005-2009	R134a	550 g ±20	PAG	ISO 46	130 cc	**699935**
FRV	Denso	2005-2009	R134a	550 g ±20	PAG	ISO 46	100 cc	**699935**
HRV		1999-2005	R134a	600 g	PAG	ISO 46	140 cc ±10	**699935**
HRV	With rear AC	1999-2005	R134a	740 g	PAG	ISO 46	170 cc ±15	**699935**
INSIGHT		2009-	R134a	425 g	PAG	ISO 46	140 cc	**699935**
JAZZ		2001-2008	R134a	425 g ±25	PAG	ISO 46	85 cc	**699935**
JAZZ		2008-	R134a	400 g	PAG	ISO 46	85 cc	**699935**
LEGEND (85-90)	Denso	1987-09.1990	R12>R134a*	900 g ±50	MIN	ISO 100	80 cc	**699936**
LEGEND (85-90)	Matsushita	1987-09.1990	R12>R134a*	900 g ±50	MIN	ISO 100	130 cc	**699936**
LEGEND (90-96)		09.1990-1992	R12>R134a*	750 g ±50	MIN	ISO 100	120 cc	**699936**
LEGEND (90-96)	Denso	1993-1996	R134a	775 g ±25	PAG	ISO 46	180 cc	**699935**
LEGEND (90-96)	Hadsys	1993-1996	R134a	775 g ±25	PAG	ISO 46	180 cc	**699935**
LEGEND (96-)		1996-2004	R134a	725 g ±25	PAG	ISO 46	140 cc	**699935**
LEGEND		2006-	R134a	475 g	PAG	ISO 46	120 cc	**699935**
LOGO	Matsushita	1999-2002	R134a	525 g ±25	PAG	ISO 46	135 cc ±5	**699935**

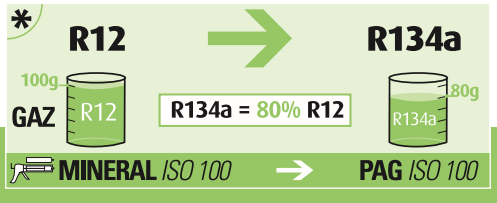

		GAZ					Valeo
HONDA (.../...)							
LOGO Sanden	1999-2002	R134a	525 g ±25	PAG	ISO 46	140 cc ±10	**699935**
PRELUDE (84-92) RHD	1987-1992	R12>R134a*	850 g ±50	MIN	ISO 100	130 cc	**699936**
PRELUDE (92-)	1992-1993	R12>R134a*	775 g ±25	MIN	ISO 100	130 cc ±10	**699936**
PRELUDE (94-92) LHD	1987-1992	R12>R134a*	900 g ±50	MIN	ISO 100	130 cc	**699936**
PRELUDE (97-)	1997-2001	R134a	725 g ±25	PAG	ISO 46	140 cc ±10	**699935**
PRELUDE LHD	1994-1996	R134a	625 g ±25	PAG	ISO 46	120 cc	**699935**
PRELUDE RHD	1994-1996	R134a	675 g ±25	PAG	ISO 46	120 cc	**699935**
S2000	2000-2009	R134a	625 g ±25	PAG	ISO 46	140 cc ±10	**699935**
SHUTTLE	1995-2001	R134a	625 g ±25	PAG	ISO 46	160 cc	**699935**
SHUTTLE With rear AC	1995-2001	R134a	825 g ±25	PAG	ISO 46	160 cc	**699935**
STREAM 1.7	2001-2006	R134a	525 g ±25	PAG	ISO 46	140 cc ±10	**699935**
STREAM 2..0	2001-2006	R134a	525 g ±25	PAG	ISO 46	167 cc ±7	**699935**
HYUNDAI							
ACCENT	1994-	R12>R134a*	875 g ±25	MIN	ISO 100	150 cc ±10	**699936**
ACCENT	1994-1999	R134a	675 g ±5	PAG	ISO 46	180 cc ±10	**699935**
ACCENT	2000-2002	R134a	600 g ±25	PAG	ISO 46	150 cc ±10	**699935**
ACCENT	2002-2005	R134a	550 g ±25	PAG	ISO 46	180 cc ±10	**699935**
ACCENT	2005-	R134a	500 g ±25	PAG	ISO 46	160 cc	**699935**
ATOS / ATOZ	1998-2004	R134a	650 g ±25	PAG	ISO 46	150 cc	**699935**
COUPE (2002-)	2002-2011	R134a	600 g ±25	PAG	ISO 46	150 cc ±10	**699935**
COUPE (96-2001)	1996-2001	R134a	700 g ±25	PAG	ISO 46	180 cc ±10	**699935**
ELANTRA HS15	2001-2006	R134a	680 g ±25	PAG	ISO 46	150 cc ±10	**699935**
ELANTRA 10PA15C	2001-2006	R134a	680 g ±25	PAG	ISO 46	127 cc ±7	**699935**
GENISIS	2008-	R134a	570 g ±25	PAG	ISO 46	180 cc	**699935**
GETZ	2002-2009	R134a	500 g ±25	PAG	ISO 46	120 cc ±10	**699935**
GRANDEUR	2005-2010	R134a	500 g ±25	PAG	ISO 46	180 cc	**699935**
H100	1993-2006	R134a	650 g ±25	PAG	ISO 46	180 cc ±10	**699935**
H100 With rear AC	1993-2006	R134a	1400 g ±50	PAG	ISO 46	180 cc ±10	**699935**
H-1	2008-	R134a	650 g ±25	PAG	ISO 46	150 cc ±10	**699935**
H-1 with rear AC	2008-	R134a	850 g ±25	PAG	ISO 46	210 cc ±10	**699935**
I10 GAS	2007-	R134a	450 g ±25	PAG	ISO 46	110 cc	**699935**
I10 DIESEL	2007-	R134a	450 g ±25	PAG	ISO 46	90 cc	**699935**
I20 1,2L	2008-	R134a	450 g ±25	PAG	ISO 46	90 cc	**699935**
I20 1,6L	2008-	R134a	450 g ±25	PAG	ISO 46	120 cc	**699935**
IX20	2010-	R134a	550 g ±25	PAG	ISO 46	100 cc ±10	**699935**
I30	2007-	R134a	500 g ±25	PAG	ISO 46	160 cc	**699935**
IX35	2010-	R134a	510 g ±25	PAG	ISO 46	120 cc	**699935**
I40	2008-	R134a	550 g ±25	PAG	ISO 46	120 cc ±10	**699935**
LANTRA	1991-1993	R12>R134a*	900 g	MIN	ISO 100	115 cc ±3	**699936**
LANTRA	1994-	R12>R134a*	875 g ±25	MIN	ISO 100	150 cc ±10	**699936**
LANTRA	1994-1996	R134a	675 g ±5	PAG	ISO 46	150 cc ±10	**699935**
LANTRA	1996-2000	R134a	700 g ±25	PAG	ISO 46	180 cc ±10	**699935**
MATRIX	2001-2010	R134a	570 g	PAG	ISO 46	154 cc	**699935**
PONY (85-90) DKK	1985-1990	R12>R134a*	900 g ±50	MIN	ISO 100	150 cc	**699936**

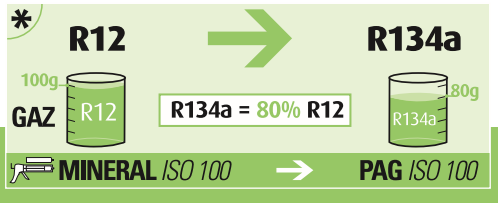

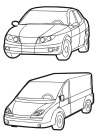

GAZ

Valeo

		GAZ				Valeo
HYUNDAI (.../...)						
PONY (85-90) Mando	1985-1990	R12>R134a*	900 g ±50	MIN	ISO 100	175 cc	**699936**
PONY (90-94)	1991-1993	R12>R134a*	875 g ±25	MIN	ISO 100	240 cc	**699936**
PONY (94-)	1994-	R12>R134a*	875 g ±25	MIN	ISO 100	218 cc ±11	**699936**
PONY (94-)	1994-	R134a	690 g ±10	PAG	ISO 46	218 cc ±11	**699935**
S COUPE	1992-1993	R12>R134a*	875 g ±25	MIN	ISO 100	80 cc ±20	**699936**
S COUPE	1994-	R12>R134a*	875 g ±25	MIN	ISO 100	218 cc ±11	**699936**
S COUPE	1994-1995	R134a	675 g ±25	PAG	ISO 46	150 cc ±10	**699935**
SANTA FE	2001-2006	R134a	600 g ±25	PAG	ISO 46	170 cc	**699935**
SANTA FE	2006-	R134a	600 g ±25	PAG	ISO 46	150 cc	**699935**
SANTA FE with rear AC	2006-	R134a	850 g ±25	PAG	ISO 46	210 cc	**699935**
SONATA	1988-1992	R12>R134a*	875 g ±25	MIN	ISO 100	218 cc ±11	**699936**
SONATA	1993-1997	R134a	725 g ±25	PAG	ISO 46	218 cc ±11	**699935**
SONATA	1998-2005	R134a	700 g ±25	PAG	ISO 46	150 cc	**699935**
SONATA	2005-	R134a	550 g ±20	PAG	ISO 46	150 cc	**699935**
STAREX / H1 / H200 FS10	1997-	R134a	650 g ±25	PAG	ISO 100	210 cc ±10	**699936**
STAREX / H1 / H200 MSC-130CV	1997-	R134a	650 g ±25	PAG	ISO 46	235 cc ±5	**699935**
STAREX / H1 / H200 V6(CWV618)	1997-	R134a	650 g ±25	PAG	ISO 46	250 cc	**699935**
STAREX / H1 / H200 FS10 with rear AC	1997-	R134a	1300 g ±10	PAG	ISO 100	210 cc ±10	**699936**
STAREX / H1 / H200 MSC-130CV with rear AC	1997-	R134a	1300 g ±10	PAG	ISO 46	235 cc ±5	**699935**
STAREX / H1 / H200 V6(CWV618) with rear AC	1997-	R134a	1300 g ±10	PAG	ISO 46	250 cc	**699935**
TERRACAN	2001-2006	R134a	850 g ±25	PAG	(1)	180 cc	
TRAJET	2000-2008	R134a	670 g	PAG	ISO 46	150 cc	**699935**
TRAJET With rear AC	2000-2008	R134a	850 g	PAG	ISO 46	210 cc	**699935**
TUCSON	2004-2010	R134a	510 g ±25	PAG	ISO 46	127 cc ±7	**699935**
XG	1999-2003	R134a	670 g ±25	PAG	ISO 46	150 cc	**699935**
ISUZU						
CAMPO DIESEL	1990-2003	R134a	750 g	PAG	ISO 46	260 cc	**699935**
RODEO	2003-	R134a	650 g	PAG	ISO 100	180 cc	**699936**
TF	2002-2003	R134a	650 g	PAG	ISO 46	100 cc	**699935**
TROOPER	1994-1998	R134a	750 g	PAG	ISO 100	270 cc	**699936**
TROOPER	1998-2003	R134a	750 g	PAG	ISO 100	150 cc	**699936**
TROOPER DKS-17CH	1992-1994	R12>R134a*	850 g	MIN	ISO 100	150 cc	**699936**
TROOPER DCV-14A	1992-1994	R12>R134a*	850 g	MIN	ISO 100	150 cc	**699936**
TROOPER DIESEL	1994-1998	R134a	750 g	PAG	ISO 46	270 cc	**699935**
TROOPER DIESEL	1998-2003	R134a	750 g	PAG	ISO 46	150 cc	**699935**
IVECO						
DAILY COMBI ENG. / MOT. F1A ND10PA17	2002-2006	R134a	1400 g	PAG	ISO 46	160 cc	**699935**
DAILY ENG. / MOT. 8140 NDSC08	1996-2002	R134a	920 g	PAG	ISO 46	80 cc	**699935**
DAILY ENG. / MOT. 8140 ND10PA17	1996-2002	R134a	920 g	PAG	ISO 46	160 cc	**699935**
DAILY ENG. / MOT. F1A ND10PA17	2002-2006	R134a	920 g	PAG	ISO 46	160 cc	**699935**
DAILY ENG. / MOT. F1C ND10PA17	2002-2006	R134a	640 g	PAG	ISO 46	160 cc	**699935**
DAILY (F1A)	2006-	R134a	720 g	PAG	ISO 46	80 cc ±20	**699935**
DAILY (F1A) BUS	2006-	R134a	1200 g	PAG	ISO 46	80 cc ±20	**699935**
DAILY (F1C)	2006-	R134a	440 g	PAG	ISO 46	80 cc ±20	**699935**

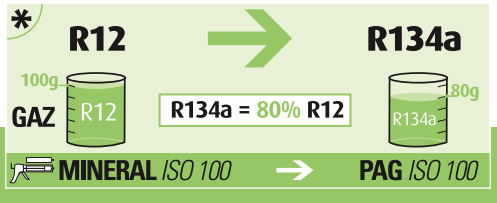

	GAZ					Valeo
IVECO (.../...)						
EUROCARGO 150 ENG. / MOT. 8040 SD709 x2	1991-2001	R134a	1700 g	PAG	ISO 100	135 cc	**699936**
EUROCARGO 150 ENG. / MOT. 8060 SD709 x2	1996-2000	R134a	1700 g	PAG	ISO 100	135 cc	**699936**
EUROCARGO 180 ENG. / MOT. NEF SD7H15	2000-	R134a	640 g	PAG	ISO 100	135 cc	**699936**
EUROCARGO 60 ENG. / MOT. 8040 SD709 x2	1991-2001	R134a	1700 g	PAG	ISO 100	135 cc	**699936**
EUROCARGO 60 ENG. / MOT. 8060 SD709 x2	1996-2000	R134a	1700 g	PAG	ISO 100	135 cc	**699936**
EUROCARGO 60 ENG. / MOT. NEF SD7H15	2000-	R134a	640 g	PAG	ISO 100	135 cc	**699936**
EUROCARGO TECTOR 180 ENG. / MOT. NEF SD7H15	2000-	R134a	1220 g	PAG	ISO 100	135 cc	**699936**
EUROCARGO TECTOR 60 ENG. / MOT. NEF SD7H15	2000-	R134a	1220 g	PAG	ISO 100	135 cc	**699936**
EUROSTAR SERIE 8000 SD709 Frontal	1993-	R134a	1900 g	PAG	ISO 100	135 cc	**699936**
EUROSTAR SERIE CURSOR ND10PA17 Frontal	1999-	R134a	1900 g	PAG	ISO 46	160 cc	**699935**
EUROTECH SERIE 8000 SD709 Frontal	1993-	R134a	1900 g	PAG	ISO 100	135 cc	**699936**
EUROTECH SERIE CURSOR ND10PA17 Frontal	1999-	R134a	1900 g	PAG	ISO 46	160 cc	**699935**
EUROTRAKKER SERIE 8000 SD709 Frontal	1993-	R134a	1900 g	PAG	ISO 100	135 cc	**699936**
EUROTRAKKER SERIE CURSOR ND10PA17 Frontal	1999-	R134a	1900 g	PAG	ISO 46	160 cc	**699935**
TRAKKER	2004-	R134a	700 g	PAG	ISO 46	200 cc	**699935**
STRALIS ND10PA17 Frontal + bdh	2002-	R134a	900 g	PAG	ISO 46	160 cc	**699935**
STRALIS AT / AD	2001-2005	R134a	700 g	PAG	ISO 46	180 cc	**699935**
STRALIS AT / AD Side	2001-2005	R134a	1400 g	PAG	ISO 46	200 cc	**699935**
JAGUAR						
S-TYPE	1999-2002	R134a	800 g ±25	PAG	ISO 46	210 cc	**699935**
S-TYPE	2002-2008	R134a	750 g ±25	PAG	ISO 46	210 cc	**699935**
S-TYPE 2,7D	2002-2008	R134a	700 g ±50	PAG	ISO 46	210 cc	**699935**
XF	2008-	R134a	700 g ±25	PAG	ISO 46	130 cc	**699935**
XJ	2010-	R134a	700 g ±25	PAG	ISO 46	110 cc	**699935**
XJ12 / DOUBLE SIX	1990-1992	R12>R134a*	1580 g ±28	MIN	ISO 100	(1) cc	**699936**
XJ12 / DOUBLE SIX	1993-1994	R134a	1150 g ±23	PAG	ISO 100	135 cc ±15	**699936**
XJ12 / DOUBLE SIX	1994-1997	R134a	1100 g ±50	PAG	ISO 46	190 cc ±10	**699935**
XJ6 / SOVEREIGN Sanden	1986-1992	R12>R134a*	1127 g ±25	MIN	ISO 100	135 cc	**699936**
XJ6 / SOVEREIGN GM	1986-1992	R12>R134a*	1127 g ±25	MIN	ISO 100	199 cc	**699936**
XJ6 / SOVEREIGN	1993-1994	R134a	1150 g ±23	PAG	ISO 100	135 cc ±15	**699936**
XJ6 / XJ8 / XJR	2003-2010	R134a	650 g ±25	PAG	ISO 46	140 cc	**699935**
XJ6 / XJ8 / XJR With rear AC	2003-2010	R134a	800 g ±25	PAG	ISO 46	180 cc	**699935**
XJ6 / XJR	1994-1997	R134a	1100 g ±50	PAG	ISO 46	190 cc ±10	**699935**
XJ8 / XJR	1997-2003	R134a	675 g ±25	PAG	ISO 46	180 cc ±20	**699935**
XJS Sanden	1988-08.1993	R12>R134a*	(1) g	MIN	ISO 100	135 cc	**699936**
XJS GM	1988-08.1993	R12>R134a*	(1) g	MIN	ISO 100	199 cc	**699936**
XJS	09.1993-1997	R134a	925 g ±25	PAG	ISO 100	135 cc ±15	**699936**
XK8 / XKR / XKR 4.2	1997-2006	R134a	650 g ±50	PAG	ISO 46	180 cc ±20	**699935**
XKR	2006-	R134a	700 g ±25	PAG	ISO 46	130 cc	**699935**
X-TYPE	2001-2009	R134a	810 g ±15	PAG	ISO 46	220 cc	**699935**
JEEP						
CHEROKEE	1992-1993	R12>R134a*	1100 g	MIN	ISO 100	136 cc	**699936**
CHEROKEE	1994-1996	R134a	900 g	PAG	ISO 100	240 cc	**699936**
CHEROKEE	1997-2001	R134a	567 g	PAG	ISO 100	240 cc	**699936**

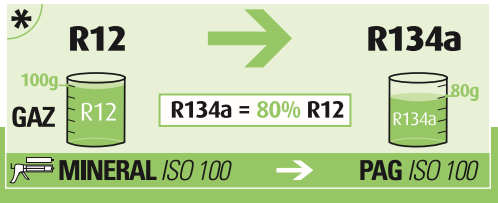

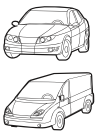

GAZ

Valeo

		GAZ				Valeo
JEEP (.../...)						
CHEROKEE	2001-2008	R134a	735 g	PAG	ISO 46	230 cc	699935
CHEROKEE	2008-	R134a	510 g	PAG	ISO 46	150 cc	699935
GRAND CHEROKEE (93-99)	1993-1996	R134a	795 g	PAG	ISO 46	230 cc	699935
GRAND CHEROKEE (93-99)	1997-1999	R134a	768 g ±31	PAG	ISO 46	225 cc ±5	699935
GRAND CHEROKEE (93-99) DIESEL	1993-1996	R134a	900 g	PAG	ISO 46	230 cc	699935
GRAND CHEROKEE (99-)	1999-2005	R134a	765 g	PAG	ISO 46	130 cc	699935
GRAND CHEROKEE	2005-2010	R134a	680 g	PAG	ISO 46	130 cc	699935
GRAND CHEROKEE	2010-	R134a	680 g	PAG	ISO 46	130 cc	699935
PATRIOT	2008-	R134a	510 g	PAG	ISO 46	110 cc	699935
WRANGLER	1994-1996	R134a	900 g	PAG	ISO 100	240 cc	699936
WRANGLER	1997-1999	R134a	567 g	PAG	ISO 100	240 cc	699936
WRANGLER	1999-2006	R134a	567 g	PAG	ISO 46	240 cc	699935
WRANGLER 2,8CRDI 3,8	2007-	R134a	510 g	PAG	ISO 46	150 cc	699935
KIA						
CARENS	1999-2002	R134a	800 g ±50	PAG	ISO 46	120 cc	699935
CARENS	2002-2006	R134a	680 g ±20	PAG	ISO 46	200 cc	699935
CARENS	2006-	R134a	450 g ±25	PAG	ISO 46	180 cc	699935
CARNIVAL / SEDONA	2000-2006	R134a	1150 g ±50	PAG	ISO 46	200 cc	699935
CARNIVAL	2006-	R134a	800 g ±25	PAG	ISO 46	110 cc ±10	699935
CEED	2007-	R134a	500 g	PAG	ISO 46	150 cc	699935
CERATO	2004-2008	R134a	500 g ±25	PAG	ISO 46	127 cc ±7	699935
CLARUS / CREDO 1.8	1996-2001	R134a	700 g ±50	PAG	ISO 46	150 cc ±10	699935
CLARUS / CREDO 2.0	1996-2001	R134a	700 g ±50	PAG	ISO 100	200 cc	699936
MAGENTIS / OPTIMA	2001-2005	R134a	662 g ±22	PAG	ISO 46	150 cc	699935
MAGENTIS	2006-	R134a	500 g	PAG	ISO 46	150 cc	699935
MENTOR / SEPHIA / SHUMA	1996-2000	R134a	700 g	PAG	ISO 46	(1) cc	699935
MENTOR / SEPHIA / SHUMA	2000-2004	R134a	700 g ±25	PAG	ISO 46	120 cc	699935
PICANTO	2004-2011	R134a	450 g ±25	PAG	ISO 46	120 cc ±10	699935
PICANTO	2011-	R134a	420 g ±25	PAG	ISO 46	120 cc	699935
RIO	2002-2005	R134a	650 g ±50	PAG	ISO 46	150 cc	699935
RIO	2005-2011	R134a	500 g ±25	PAG	ISO 46	120 cc ±10	699935
RIO	2011-	R134a	420 g ±25	PAG	ISO 46	120 cc ±10	699935
SHUMA	2001-2004	R134a	700 g	PAG	ISO 46	140 cc	699935
SORENTO	2002-2009	R134a	600 g ±25	PAG	ISO 46	200 cc	699935
SORENTO	2009-	R134a	600 g	PAG	ISO 46	120 cc	699935
SORENTO with rear AC	2009-	R134a	750 g	PAG	ISO 46	180 cc	699935
SOUL	2009-	R134a	500 g	PAG	ISO 46	105 cc	699935
SPORTAGE (2004-)	2004-2010	R134a	510 g ±25	PAG	ISO 46	127 cc ±7	699935
SPORTAGE (2004-) DIESEL	2004-2010	R134a	510 g ±25	PAG	ISO 46	207 cc ±7	699935
SPORTAGE	2010-	R134a	510 g	PAG	ISO 46	120 cc	699935
SPORTAGE (95-2000)	1995-2001	R134a	700 g	PAG	ISO 100	(1) cc	699936
SPORTAGE 2.0I 16V	2000-2004	R134a	700 g	PAG	ISO 46	120 cc	699935
VENGA	2010-	R134a	550 g	PAG	ISO 46	110 cc	699935

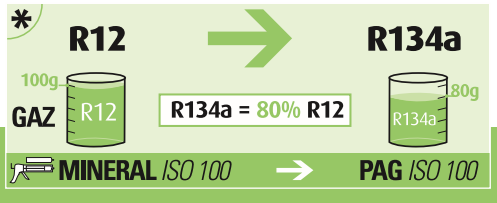

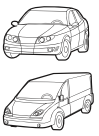

			GAZ				Valeo
LANCIA							
DEDRA	Sankyo	1989-1993	R12>R134a*	900 g ±50	MIN	ISO 100	135 cc	**699936**
DEDRA	Harrison	1989-1993	R12>R134a*	900 g ±50	MIN	ISO 100	236 cc	**699936**
DELTA / DEDRA	Sankyo	1994-1999	R134a	800 g	PAG	ISO 100	135 cc	**699936**
DELTA / DEDRA	Harrison	1994-1999	R134a	630 g ±40	PAG	ISO 125	236 cc	**699937**
DELTA / DEDRA	Denso	1994-1999	R134a	630 g ±40	PAG	ISO 100	155 cc ±25	**699936**
DELTA / DEDRA	Sanden SD7V16	1994-1999	R134a	630 g ±40	PAG	ISO 46	240 cc	**699935**
DELTA / DEDRA	Sanden SD710	1994-1999	R134a	630 g ±40	PAG	ISO 100	(1) cc	**699936**
DELTA		2008-	R134a	500 g	PAG	ISO 46	130 cc	**699935**
KAPPA	Sanden	1994-2001	R134a	730 g	PAG	ISO 46	135 cc	**699935**
KAPPA	Denso	1994-2001	R134a	800 g	PAG	ISO 46	155 cc ±15	**699935**
LYBRA 1.6		1999-2005	R134a	700 g ±25	PAG	ISO 125	265 cc	**699937**
LYBRA 1.8. 1.9JTD		1999-2005	R134a	700 g ±25	PAG	ISO 100	135 cc	**699936**
LYBRA 2.0		1999-2005	R134a	700 g ±25	PAG	ISO 100	150 cc ±20	**699936**
LYBRA 2.4JTD		1999-2005	R134a	700 g ±25	PAG	ISO 46	120 cc ±15	**699935**
MUSA		2004-2010	R134a	500 g	PAG	ISO 46	130 cc	**699935**
PHEDRA		2002-2010	R134a	600 g ±25	PAG	ISO 46	200 cc	**699935**
PRISMA 1.9D		1986-1991	R12>R134a*	850 g ±50	MIN	ISO 100	135 cc ±15	**699936**
THEMA		1992-1994	R134a	1100 g	PAG	ISO 100	135 cc	**699936**
THEMA 2.0. 2.5 TD		1988-1992	R12>R134a*	1200 g	MIN	ISO 100	135 cc	**699936**
THEMA 2.5TD		1985-1988	R12>R134a*	1200 g	MIN	ISO 100	135 cc ±15	**699936**
THESIS		2002-2009	R134a	650 g	PAG	ISO 46	135 cc ±5	**699935**
THESIS V6		2002-2009	R134a	730 g	PAG	ISO 46	135 cc ±5	**699935**
Y10		1992-1993	R12>R134a*	800 g	MIN	ISO 100	100 cc	**699936**
YPSILON (2003-)		2003-2011	R134a	500 g ±40	PAG	ISO 46	130 cc	**699935**
YPSILON 1.1		1996-2003	R134a	650 g ±25	PAG	ISO 46	80 cc ±20	**699935**
YPSILON 1.2. 1.4		1996-2003	R134a	675 g ±25	PAG	ISO 100	160 cc ±10	**699936**
ZETA		1996-2002	R134a	1000 g	PAG	ISO 46	135 cc	**699935**
LAND ROVER							
90 / 110 / DEFENDER		1985-05.1994	R12>R134a*	1220 g ±30	MIN	ISO 100	313 cc	**699936**
DEFENDER		06.1994-1998	R134a	1090 g	PAG	ISO 46	313 cc	**699935**
DEFENDER TD5		1999-	R134a	750 g ±50	PAG	ISO 46	(1) cc	**699935**
DEFENDER V8I		1998-2002	R134a	900 g ±30	PAG	ISO 46	180 cc	**699935**
DEFENDER 2,4L.TD4		2006-	R134a	600 g ±25	PAG	ISO 46	130 cc	**699935**
DISCOVERY (2004-)		2004-2009	R134a	600 g	PAG	ISO 46	130 cc	**699935**
DISCOVERY (2004-)	With rear AC	2004-2009	R134a	900 g	PAG	ISO 46	179 cc	**699935**
DISCOVERY 2,7L.TD		2009-	R134a	550 g	PAG	ISO 46	130 cc	**699935**
DISCOVERY 2,7L.TD	with rear AC	2009-	R134a	810 g	PAG	ISO 46	170 cc	**699935**
DISCOVERY 4,0I		2009-	R134a	600 g	PAG	ISO 46	130 cc	**699935**
DISCOVERY 4,0I	with rear AC	2009-	R134a	900 g	PAG	ISO 46	170 cc	**699935**
DISCOVERY 3,0L.TD 5,0I		2009-	R134a	625 g	PAG	ISO 46	110 cc	**699935**
DISCOVERY 3,0L.TD 5,0I	with rear AC	2009-	R134a	900 g	PAG	ISO 46	170 cc	**699935**
DISCOVERY (90-)		1990-08.1994	R12>R134a*	1190 g	MIN	ISO 100	135 cc ±15	**699936**
DISCOVERY (90-)	With rear AC	1990-08.1994	R12>R134a*	1540 g	MIN	ISO 100	135 cc ±15	**699936**
DISCOVERY (94-)		09.1994-1998	R134a	900 g	PAG	ISO 46	180 cc	**699935**

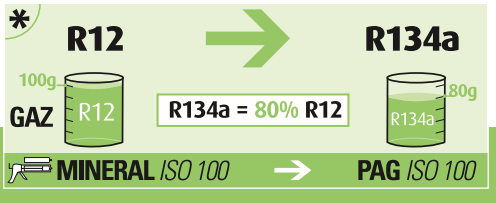

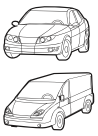

GAZ

Valeo

		GAZ				Valeo
LAND ROVER (.../...)						
DISCOVERY (94-) With rear AC	09.1994-1998	R134a	1150 g	PAG	ISO 46	180 cc	**699935**
DISCOVERY (98-)	1998-2004	R134a	700 g ±25	PAG	ISO 46	180 cc	**699935**
DISCOVERY (98-) With rear AC	1998-2004	R134a	900 g ±25	PAG	ISO 46	180 cc	**699935**
FREELANDER (2000-2006) V6 LHD	2000-2006	R134a	430 g ±25	PAG	ISO 46	(1) cc	**699935**
FREELANDER (2000-2006) V6 RHD	2000-2006	R134a	540 g ±25	PAG	ISO 46	(1) cc	**699935**
FREELANDER 2,2 LTD4	2006-	R134a	730 g	PAG	ISO 46	200 cc	**699935**
FREELANDER 3,2I	2006-	R134a	730 g	PAG	ISO 46	150 cc	**699935**
FREELANDER (97-2000)	1997-2000	R134a	725 g ±25	PAG	ISO 46	150 cc ±20	**699935**
RANGE ROVER (2002-)	2002-2005	R134a	510 g ±10	PAG	ISO 46	110 cc	**699935**
RANGE ROVER (-94) LHD	1989-08.1994	R12>R134a*	1080 g	MIN	ISO 100	135 cc ±15	**699936**
RANGE ROVER (-94) RHD	1989-08.1994	R12>R134a*	1250 g	MIN	ISO 100	135 cc ±15	**699936**
RANGE ROVER (94-2002)	1994-1999	R134a	1250 g	PAG	ISO 46	150 cc	**699935**
RANGE ROVER (94-2002)	1999-2002	R134a	1380 g ±25	PAG	ISO 46	180 cc	**699935**
RANGE ROVER (94-2002) / CLASSIC	09.1994-1995	R134a	900 g	PAG	ISO 46	180 cc	**699935**
RANGE ROVER (94-2002) DIESEL	1994-2002	R134a	1100 g	PAG	ISO 46	140 cc	**699935**
RANGE ROVER SPORT 2,7LTD 4,2L. 4,4L.	2005-	R134a	600 g	PAG	ISO 46	130 cc	**699935**
RANGE ROVER SPORT 3,0LTD	2009-	R134a	600 g	PAG	ISO 46	110 cc	**699935**
RANGE ROVER SPORT 3,6LTD	2006-	R134a	650 g	PAG	ISO 46	130 cc	**699935**
RANGE ROVER SPORT 5,0L.	2009-	R134a	700 g	PAG	ISO 46	110 cc	**699935**
RANGE ROVER EVOQUE	2011-	R134a	650 g ±25	PAG	ISO 46	150 cc	**699935**
LEXUS						
GS300	1994-1996	R134a	850 g ±50	PAG	ISO 46	(1) cc	**699935**
GS300 / GS430	1996-2005	R134a	600 g ±50	PAG	ISO 46	(1) cc	**699935**
GS300 / GS430	2005-	R134a	450 g	PAG	ISO 46	130 cc	**699935**
GS450H	2006-	R134a	450 g	PAG	ISO 46	120 cc	**699935**
IS200 / IS300	1999-2005	R134a	600 g ±50	PAG	ISO 46	(1) cc	**699935**
IS250	2005-	R134a	430 g ±30	PAG	ISO 46	(1) cc	**699935**
LS400	1990-1992	R12>R134a*	1050 g	MIN	ISO 100	(1) cc	**699936**
LS400	1993-2000	R134a	700 g ±50	PAG	ISO 46	(1) cc	**699935**
LS400 With rear AC	1993-2000	R134a	950 g ±50	PAG	ISO 46	(1) cc	**699935**
LS430	2000-2006	R134a	675 g ±25	PAG	ISO 46	(1) cc	**699935**
LS430 With rear AC	2000-2006	R134a	900 g ±50	PAG	ISO 46	(1) cc	**699935**
LS460	2006-	R134a	600 g	PAG	ISO 46	130 cc	**699935**
LS460 with rear AC	2006-	R134a	750 g	PAG	ISO 46	150 cc	**699935**
RX300	2000-2003	R134a	650 g ±50	PAG	ISO 46	(1) cc	**699935**
RX300	2003-2009	R134a	600 g ±50	PAG	ISO 46	120 cc	**699935**
RX350	2006-2009	R134a	600 g ±50	PAG	ISO 46	120 cc	**699935**
RX350	2009-	R134a	500 g ±25	PAG	ISO 46	110 cc	**699935**
RX400H	2005-2010	R134a	600 g ±50	PAG	ISO 46	120 cc	**699935**
SC430	2000-2010	R134a	700 g ±50	PAG	ISO 46	130 cc ±5	**699935**
MAN						
F2000 Unicla round pipe	1994-	R134a	1150 g				
F2000 Zexel round pipe	1994-	R134a	1150 g	PAG	ISO 46	200 cc	**699935**
F2000 Sanden round pipe	1994-	R134a	1150 g	PAG	ISO 100	135 cc	**699936**

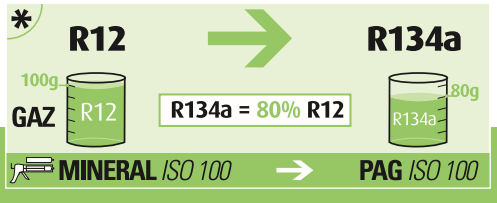

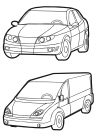

			GAZ					Valeo
MAN (.../...)								
F2000	Denso round pipe	1994-	R134a	1150 g	PAG	ISO 46	160 cc	**699935**
F2000	Diesel Kiki round pipe	1994-	R134a	1150 g	PAG	ISO 46		**699935**
F2000	Unicla flat pipe	1994-	R134a	950 g				
F2000	Zexel flat pipe	1994-	R134a	950 g	PAG	ISO 46	200 cc	**699935**
F2000	Sanden flat pipe	1994-	R134a	950 g	PAG	ISO 100	135 cc	**699936**
F2000	Denso flat pipe	1994-	R134a	950 g	PAG	ISO 46	160 cc	**699935**
F2000	Diesel Kiki flat pipe	1994-	R134a	950 g	PAG	ISO 46		**699935**
L2000 / M2000	Unicla round pipe	1999-	R134a	1150 g				
L2000 / M2000	Zexel round pipe	1999-	R134a	1150 g	PAG	ISO 46	200 cc	**699935**
L2000 / M2000	Sanden round pipe	1999-	R134a	1150 g	PAG	ISO 100	135 cc	**699936**
L2000 / M2000	Denso round pipe	1999-	R134a	1150 g	PAG	ISO 46	160 cc	**699935**
L2000 / M2000	Diesel Kiki round pipe	1999-	R134a	1150 g	PAG	ISO 46		**699935**
L2000 / M2000	Unicla flat pipe	1999-	R134a	950 g				
L2000 / M2000	Zexel flat pipe	1999-	R134a	950 g	PAG	ISO 46	200 cc	**699935**
L2000 / M2000	Sanden flat pipe	1999-	R134a	950 g	PAG	ISO 100	135 cc	**699936**
L2000 / M2000	Denso flat pipe	1999-	R134a	950 g	PAG	ISO 46	160 cc	**699935**
L2000 / M2000	Diesel Kiki flat pipe	1999-	R134a	950 g	PAG	ISO 46		**699935**
L2000 / M2000L	Unicla	1999-	R134a	1250 g				
L2000 / M2000L	Zexel	1999-	R134a	1250 g	PAG	ISO 46	200 cc	**699935**
L2000 / M2000L	Sanden	1999-	R134a	1250 g	PAG	ISO 100	135 cc	**699936**
L2000 / M2000L	Denso	1999-	R134a	1250 g	PAG	ISO 46	160 cc	**699935**
L2000 / M2000L	Diesel Kiki	1999-	R134a	1250 g	PAG	ISO 46		**699935**
LE-C / ME-C / B	Unicla round pipe		R134a	1150 g				
LE-C / ME-C / B	Zexel round pipe		R134a	1150 g	PAG	ISO 46	200 cc	**699935**
LE-C / ME-C / B	Sanden round pipe		R134a	1150 g	PAG	ISO 100	135 cc	**699936**
LE-C / ME-C / B	Denso round pipe		R134a	1150 g	PAG	ISO 46	160 cc	**699935**
LE-C / ME-C / B	Diesel Kiki round pipe		R134a	1150 g	PAG	ISO 46		**699935**
LE-C / ME-C / B	Unicla flat pipe		R134a	950 g				
LE-C / ME-C / B	Zexel flat pipe		R134a	950 g	PAG	ISO 46	200 cc	**699935**
LE-C / ME-C / B	Sanden flat pipe		R134a	950 g	PAG	ISO 100	135 cc	**699936**
LE-C / ME-C / B	Denso flat pipe		R134a	950 g	PAG	ISO 46	160 cc	**699935**
LE-C / ME-C / B	Diesel Kiki flat pipe		R134a	950 g	PAG	ISO 46		**699935**
M2000M / F2000	Unicla	1995-1999	R134a	1150 g				
M2000M / F2000	Zexel	1995-1999	R134a	1150 g	PAG	ISO 46	200 cc	**699935**
M2000M / F2000	Sanden	1995-1999	R134a	1150 g	PAG	ISO 100	135 cc	**699936**
M2000M / F2000	Denso	1995-1999	R134a	1150 g	PAG	ISO 46	160 cc	**699935**
M2000M / F2000	Diesel Kiki	1995-1999	R134a	1150 g	PAG	ISO 46		**699935**
TGA	(-) Dual AC	2000-	R134a	900 g	PAG	ISO 46	250 cc	**699935**
TGA	(+) Dual AC	2000-	R134a	1200 g	PAG	ISO 46	250 cc	**699935**
TGL	Unicla round pipe	2005-	R134a	1150 g				
TGL	Zexel round pipe	2005-	R134a	1150 g	PAG	ISO 46	200 cc	**699935**
TGL	Sanden round pipe	2005-	R134a	1150 g	PAG	ISO 100	135 cc	**699936**
TGL	Denso round pipe	2005-	R134a	1150 g	PAG	ISO 46	160 cc	**699935**
TGL	Diesel Kiki round pipe	2005-	R134a	1150 g	PAG	ISO 46		**699935**

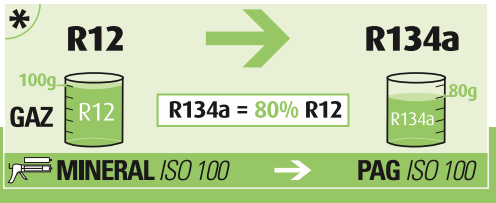

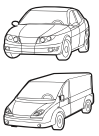

GAZ

Valeo

		GAZ					Valeo
MAN (.../...)							
TGL	Unicla flat pipe	2005-	R134a	950 g			
TGL	Zexel flat pipe	2005-	R134a	950 g	PAG	ISO 46	200 cc	**699935**
TGL	Sanden flat pipe	2005-	R134a	950 g	PAG	ISO 100	135 cc	**699936**
TGL	Denso flat pipe	2005-	R134a	950 g	PAG	ISO 46	160 cc	**699935**
TGL	Diesel Kiki flat pipe	2005-	R134a	950 g	PAG	ISO 46		**699935**
TGM		2005-	R134a	750 g	PAG	ISO 46	(1) cc	**699935**
TGS	(-) Dual AC	2007-	R134a	950 g	PAG	ISO 46	(1) cc	**699935**
TGS	(+) Dual AC	2007-	R134a	1050 g	PAG	ISO 46	(1) cc	**699935**
TGX	(-) Dual AC	2007-	R134a	950 g	PAG	ISO 46	(1) cc	**699935**
TGX	(+) Dual AC	2007-	R134a	1050 g	PAG	ISO 46	(1) cc	**699935**
MAZDA							
2		2002-2007	R134a	650 g ±13	PAG	ISO 46	207 cc	**699935**
2		2007-	R134a	500 g	PAG	ISO 46	110 cc	**699935**
3		2003-2009	R134a	500 g	PAG	ISO 46	125 cc	**699935**
3		2009-	R134a	475 g	PAG	ISO 46	130 cc	**699935**
121		1995-1999	R134a	740 g ±10	PAG	ISO 46	200 cc	**699935**
323		1989-1994	R12>R134a*	775 g ±25	MIN	ISO 100	120 cc	**699936**
323		1994-10.1996	R134a	750 g	PAG	ISO 46	175 cc	**699935**
323		11.1996-1998	R134a	725 g ±25	PAG	ISO 46	150 cc	**699935**
626		1992-05.1994	R12>R134a*	775 g ±25	MIN	ISO 100	150 cc	**699936**
626		06.1994-1997	R134a	700 g	PAG	ISO 46	175 cc	**699935**
626		1997-2002	R134a	662 g ±38	PAG	ISO 46	150 cc	**699935**
323 LHD		1998-2004	R134a	600 g	PAG	ISO 46	150 cc	**699935**
323 RHD		1998-2004	R134a	625 g	PAG	ISO 46	150 cc	**699935**
5		2005-2009	R134a	500 g	PAG	ISO 46	150 cc	**699935**
5		2010-	R134a	480 g ±25	PAG	ISO 46	120 cc	**699935**
6 DIESEL / MZR-CD LHD		2002-2007	R134a	470 g	PAG	ISO 46	150 cc	**699935**
6 DIESEL / MZR-CD RHD		2002-2007	R134a	430 g	PAG	ISO 46	150 cc	**699935**
6 LHD		2002-2007	R134a	470 g	PAG	ISO 46	120 cc	**699935**
6 RHD		2002-2007	R134a	430 g	PAG	ISO 46	120 cc	**699935**
6 1,8L. 2,0L. 2,5L.		2007-	R134a	500 g	PAG	ISO 46	120 cc	**699935**
6 2,0LD 2,2LD		2007-	R134a	525 g	PAG	ISO 46	120 cc	**699935**
B SERIES		1985-1993	R12>R134a*	1600 g	MIN	ISO 100	(1) cc	**699936**
B SERIES		1995-1998	R134a	550 g	PAG	ISO 46	107 cc ±7	**699935**
B2500		1998-2006	R134a	550 g	PAG	ISO 46	180 cc	**699935**
BT-50		2006-	R134a	475 g	PAG	ISO 46	180 cc	**699935**
CX-7		2006-	R134a	490 g	PAG	ISO 46	150 cc	**699935**
CX-9		2007-	R134a	690 g	PAG	ISO 46	160 cc	**699935**
DEMIO		1998-2002	R134a	625 g ±25	PAG	ISO 46	150 cc	**699935**
E SERIES		1985-1994	R12>R134a*	1600 g	MIN	ISO 100	(1) cc	**699936**
E SERIES		1995-2003	R134a	550 g	PAG	ISO 46	150 cc	**699935**
E SERIES	With rear AC	1995-2003	R134a	1150 g	PAG	ISO 46	200 cc	**699935**
MPV 2.0. 2.3		2001-2005	R134a	600 g	PAG	ISO 46	160 cc	**699935**
MPV 2.0. 2.3	With rear AC	2001-2005	R134a	800 g	PAG	ISO 46	160 cc	**699935**

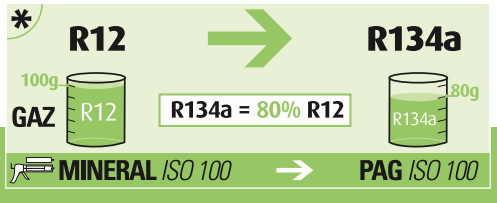

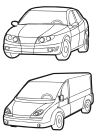

		GAZ					Valeo
MAZDA (.../...)							
MPV 2.0. 2.5	1999-2001	R134a	650 g	PAG	ISO 46	160 cc	**699935**
MPV 2.0. 2.5 With rear AC	1999-2001	R134a	850 g	PAG	ISO 46	160 cc	**699935**
MPV 3.0	2001-2005	R134a	650 g	PAG	ISO 46	160 cc	**699935**
MPV 3.0 With rear AC	2001-2005	R134a	850 g	PAG	ISO 46	160 cc	**699935**
MX3	1991-1994	R12>R134a*	800 g	MIN	ISO 100	150 cc	**699936**
MX3	1995-1999	R134a	750 g	PAG	ISO 46	175 cc	**699935**
MX-5	1998-2004	R134a	425 g	PAG	ISO100	(1) cc	**699936**
MX-5	2005-	R134a	450 g	PAG	ISO100	130 cc	**699936**
MX6	1992-05.1994	R12>R134a*	775 g ±25	MIN	ISO 100	150 cc	**699936**
MX6	06.1994-1998	R134a	700 g	PAG	ISO 46	175 cc	**699935**
PREMACY	1999-2005	R134a	650 g	PAG	ISO 46	150 cc	**699935**
RX8	2004-2012	R134a	430 g	PAG	ISO 46	60 cc	**699935**
TRIBUTE	2000-2007	R134a	900 g	PAG	ISO 46	260 cc	**699935**
XEDOS 6	04.1994-2001	R134a	700 g	PAG	ISO 46	175 cc	**699935**
XEDOS 9	1994-2002	R134a	750 g ±50	PAG	ISO 46	175 cc	**699935**
MERCEDES							
190 / 190D / 190E (201)	1984-1993	R12>R134a*	1050 g ±50	MIN	ISO 100	120 cc	**699936**
190E 2.5-16 (201)	1988-1993	R12>R134a*	950 g	MIN	ISO 100	150 cc	**699936**
200 / 300 (124)	1985-1993	R12>R134a*	1100 g	MIN	ISO 100	120 cc	**699936**
200 / 300 (124) With rear AC	1985-1993	R12>R134a*	1250 g	MIN	ISO 100	120 cc	**699936**
260SE / 300SE / 300SEL	1985-1991	R12>R134a*	(1) g	MIN	ISO 100	120 cc	**699936**
300SL / 500SL (129)	1989-05.1991	R12>R134a*	1100 g	MIN	ISO 100	120 cc	**699936**
300SL / 500SL / 600SL (129)	06.1991-1994	R134a	950 g	PAG	ISO 46	145 cc ±5	**699935**
420SE / 420SEC / 420SEL	1989-1991	R12>R134a*	(1) g	MIN	ISO 100	300 cc	**699936**
500SE / 500SEC / 500SEL / 560SE	1989-1991	R12>R134a*	(1) g	MIN	ISO 100	300 cc	**699936**
A-CLASS (168)	1998-2005	R134a	600 g ±30	PAG	ISO 46	100 cc	**699935**
A-CLASS (169)	2004-2012	R134a	770 g	PAG	ISO 46	120 cc	**699935**
B-CLASS (245)	2005-2011	R134a	770 g	PAG	ISO 46	120 cc	**699935**
B-CLASS (245) 200 CDI	2005-2011	R134a	840 g	PAG	ISO 46	120 cc	**699935**
C-CLASS (202) - VIN 1A 168 524.1F 164 269	1993-2001	R134a	950 g	PAG	ISO 46	155 cc	**699935**
C-CLASS (202) VIN 1A 168 525.1F 164 270 -	1993-2001	R134a	850 g	PAG	ISO 46	155 cc	**699935**
C-CLASS (203) - 23.04.04	2000-2004	R134a	750 g	PAG	ISO 46	120 cc	**699935**
C-CLASS (203) - 23.04.04 Bock	2000-2004	R134a	750 g	PAG	ISO 46	120 cc	**699935**
C-CLASS (203) 24.04.04 -	2004-2007	R134a	850 g	PAG	ISO 46	120 cc	**699935**
C-CLASS (203) 24.04.04 - Bock	2004-2007	R134a	850 g	PAG	ISO 46	120 cc	**699935**
C-CLASS (204)	2007-	R134a	590 g	PAG	ISO 46	120 cc	**699935**
CL (215)	1999-2006	R134a	950 g	PAG	ISO 46	120 cc	**699935**
CLC (203)	2008-	R134a	850 g	PAG	ISO 46	130 cc	**699935**
CLK (208)	1997-2003	R134a	850 g	PAG	ISO 46	120 cc	**699935**
CLK (209)	2002-2010	R134a	750 g	PAG	ISO 46	120 cc	**699935**
CLS (219)	2005-2010	R134a	950 g	PAG	ISO 46	120 cc	**699935**
CLS (219)	2011-	R134a	950 g	PAG	ISO 46	120 cc	**699935**
E-CLASS (124)	1993-1996	R134a	950 g	PAG	ISO 46	160 cc	**699935**
E-CLASS (124) With rear AC	1993-1996	R134a	1150 g	PAG	ISO 46	160 cc	**699935**

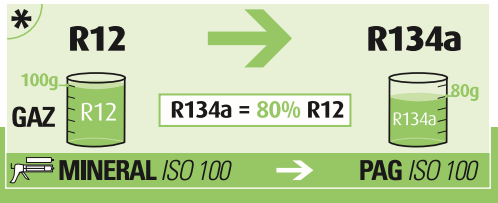

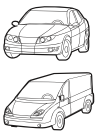

GAZ

Valeo

			GAZ				
MERCEDES (.../...)							
E-CLASS (210)	1995-2003	R134a	1000 g	PAG	ISO 46	120 cc	**699935**
E-CLASS (211)	2002-2009	R134a	950 g	PAG	ISO 46	120 cc	**699935**
E-CLASS (212)	2009-	R134a	590 g	PAG	ISO 46	120 cc	**699935**
G-CLASS 300GE / G300	1993-1995	R134a	(1) g	PAG	ISO 46	(1) cc	**699935**
GL-CLASS (164)	2006-	R134a	970 g	PAG	ISO 46	110 cc	**699935**
GL-CLASS (164) with rear AC	2006-	R134a	1220 g	PAG	ISO 46	110 cc	**699935**
GLK-CLASS (204)	2008-	R134a	590 g	PAG	ISO 46	120 cc	**699935**
M-CLASS (163)	1998-2005	R134a	750 g	PAG	ISO 46	175 cc ±10	**699935**
M-CLASS (164)	2005-	R134a	970 g	PAG	ISO 46	(1) cc	**699935**
R-CLASS (251)	2006-	R134a	970 g	PAG	ISO 46	110 cc	**699935**
R-CLASS (251) with rear AC	2006-	R134a	1220 g	PAG	ISO 46	110 cc	**699935**
S-CLASS (140)	1991-06.1991	R12>R134a*	1300 g	MIN	ISO 100	120 cc	**699936**
S-CLASS (140) With rear AC	1991-06.1991	R12>R134a*	1500 g	MIN	ISO 100	120 cc	**699936**
S-CLASS (140) - VIN 1A 128 373	07.1991-1999	R134a	1200 g	PAG	ISO 46	(1) cc	**699935**
S-CLASS (140) - VIN 1A 128 373 With rear AC	07.1991-1999	R134a	1400 g	PAG	ISO 46	(1) cc	**699935**
S-CLASS (140) VIN 1A 128 374 -	07.1991-1999	R134a	1150 g	PAG	ISO 46	(1) cc	**699935**
S-CLASS (140) VIN 1A 128 374 - With rear AC	07.1991-1999	R134a	1250 g	PAG	ISO 46	(1) cc	**699935**
S-CLASS (220)	1999-2005	R134a	950 g	PAG	ISO 46	120 cc	**699935**
S-CLASS (220) With rear AC	1999-2005	R134a	1050 g	PAG	ISO 46	120 cc	**699935**
S-CLASS (221)	2005-	R134a	1070 g	PAG	ISO 46	110 cc	**699935**
S-CLASS (221) with rear AC	2005-	R134a	1180 g	PAG	ISO 46	110 cc	**699935**
S-CLASS (221) with rear AC (Z07+Z19)	2005-	R134a	1350 g	PAG	ISO 46	110 cc	**699935**
S-CLASS COUPE (215)	1999-2006	R134a	950 g	PAG	ISO 46	120 cc	**699935**
S-CLASS COUPE (216)	2006-	R134a	1070 g	PAG	ISO 46	110 cc	**699935**
SL280 / SL320 / SL500 / SL600 (129)	1993-2001	R134a	950 g	PAG	ISO 46	145 cc ±5	**699935**
SL (R230) 7SEU16C	2001-	R134a	920 g	PAG	ISO 46	120 cc	**699935**
SL (R230) 7SEU17C	2001-	R134a	920 g	PAG	ISO 46	140 cc	**699935**
SLK (170)	1996-2004	R134a	850 g	PAG	ISO 46	120 cc	**699935**
SLK (171)	2004-2011	R134a	670 g	PAG	ISO 46	160 cc	**699935**
SLK (172)	2011-	R134a	550 g	PAG	ISO 46	120 cc	**699935**
SLR (199)	2004-	R134a	980 g	PAG	ISO 46	170 cc	**699935**
SLS (197)	2010-	R134a	780 g	PAG	ISO 46	170 cc	**699935**
SPRINTER (901 / 2 / 3 / 4 / 5)	1995-2006	R134a	860 g	PAG	ISO 46	120 cc	**699935**
SPRINTER (906)	2006-	R134a	1000 g	PAG	ISO 46	160 cc	**699935**
SPRINTER (906) With automatic AC	2006-	R134a	800 g	PAG	ISO 46	190 cc	**699935**
SPRINTER (906) With automatic AC and with rear AC	2006-	R134a	1190 g	PAG	ISO 46	190 cc	**699935**
T1 / TN 407-410	1993-1995	R134a	700 g	PAG	ISO 46	120 cc	**699935**
T2 / N1 507-711	1993-1995	R134a	660 g	PAG	ISO 46	120 cc	**699935**
VANEO (414)	2002-2005	R134a	600 g	PAG	ISO 46	100 cc	**699935**
VARIO	1996-	R134a	1225 g	PAG	ISO 46	160 cc	**699935**
V-CLASS / VITO (638) 7SB16	1995-2003	R134a	850 g	PAG	ISO 46	175 cc	**699935**
V-CLASS / VITO (638) 10PA17C	1995-2003	R134a	920 g	PAG	ISO 46	120 cc	**699935**
V-CLASS / VITO (638) SD7V16	1995-2003	R134a	850 g	PAG	ISO 46	135 cc	**699935**
V-CLASS / VITO (638) 7SB16/HH7 with rear AC	1995-2003	R134a	1100 g	PAG	ISO 46	175 cc	**699935**

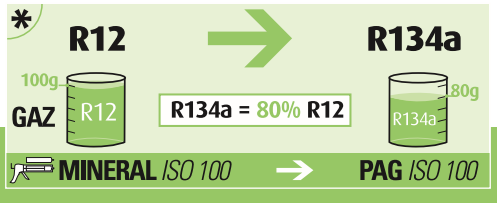

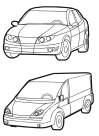

		GAZ					Valeo
MERCEDES (.../...)							
VIANO / VITO (639)	2003-	R134a	550 g	PAG	ISO 46	190 cc	**699935**
VIANO / VITO (639) With rear AC	2003-	R134a	840 g	PAG	ISO 46	190 cc	**699935**
VIANO / VITO (639) LWB with rear AC	2003-	R134a	870 g	PAG	ISO 46	190 cc	**699935**
MERCEDES TRUCK							
ACTROS 1996	1996-2002	R134a	1100 g	PAG	ISO 46	160 cc	**699935**
ACTROS 2003	2003-2008	R134a	1100 g	PAG	ISO 46	175 cc	**699935**
ACTROS 2003 With auxiliary air conditioning	2003-2008	R134a	1600 g	PAG	ISO 46	180 cc	**699935**
ATEGO I	1998-2004	R134a	1000 g	PAG	ISO 46	160 cc	**699935**
ATEGO I With auxiliary air conditioning	1998-2004	R134a	1200 g	PAG	ISO 46	160 cc	**699935**
ATEGO II	2004-	R134a	1200 g	PAG	ISO 46	160 cc	**699935**
AXOR	2001-10.2004	R134a	1100 g	PAG	ISO 46	175 cc	**699935**
AXOR II	2004-	R134a	1100 g	PAG	ISO 46	(1) cc	**699935**
ECONIC	1998-2008	R134a	600 g	PAG	ISO 46	160 cc	**699935**
UNIMOG U300-500	2000-2004	R134a	1400 g	PAG	ISO 46	150 cc	**699935**
ZETROS	2008-	R134a	1250 g	PAG	ISO 46	(1) cc	**699935**
MINI							
MINI	2001-2006	R134a	415 g ±10	PAG	ISO 46	(1) cc	**699935**
MINI (R56)	2006-	R134a	490 g	PAG	ISO 46	(1) cc	**699935**
MINI CLUBMAN (R55)	2007-	R134a	490 g	PAG	ISO 46	(1) cc	**699935**
MINI CABRIOLET (R57)	2007-	R134a	490 g	PAG	ISO 46	(1) cc	**699935**
MITSUBISHI							
3000 GT	1993-2000	R134a	765 g ±25	PAG	ISO 46	160 cc ±10	**699935**
CARISMA	1996-2005	R134a	700 g ±20	PAG	ISO 46	120 cc	**699935**
CARISMA DIESEL	1997-2005	R134a	700 g ±20	PAG	ISO 100	135 cc	**699936**
COLT (2004-)	2004-2008	R134a	430 g ±20	PAG	ISO 46	100 cc	**699935**
COLT	2008-	R134a	430 g ±20	PAG	ISO 46	100 cc	**699935**
COLT CZC CABRIOLET	2006-	R134a	430 g ±20	PAG	ISO 46	100 cc	**699935**
COLT / LANCER FX80	1988-05.1992	R12>R134a*	1020 g	MIN	ISO 100	140 cc ±10	**699936**
COLT / LANCER FX105V	1988-05.1992	R12>R134a*	1020 g	MIN	ISO 100	160 cc ±10	**699936**
COLT / LANCER	1992-1996	R134a	590 g ±20	PAG	ISO 46	120 cc	**699935**
COLT / LANCER	1996-2003	R134a	575 g ±20	PAG	ISO 46	60 cc	**699935**
GALANT	1993-1997	R134a	650 g ±20	PAG	ISO 46	155 cc ±5	**699935**
GALANT	1997-2003	R134a	690 g ±20	PAG	ISO 46	120 cc	**699935**
GALANT / SAPORRO	1987-1993	R12>R134a*	1000 g	MIN	ISO 100	140 cc ±10	**699936**
GRANDIS	2004-2010	R134a	560 g ±25	PAG	ISO 46	170 cc ±10	**699935**
GRANDIS with rear AC	2004-2010	R134a	750 g ±25	PAG	ISO 46	170 cc ±10	**699935**
I-MIEV	2009-	R134a	325 g ±20	PAG	ISO 46	100 cc	**699935**
L200	1994-1997	R134a	720 g ±20	PAG	ISO 46	100 cc	**699935**
L200	1997-2006	R134a	575 g ±25	PAG	ISO 46	180 cc	**699935**
L200	2006-	R134a	560 g	PAG	ISO 46	130 cc	**699935**
LANCER (2004-)	2004-2008	R134a	500 g ±20	PAG	ISO 46	140 cc	**699935**
LANCER	2008-	R134a	500 g	PAG	ISO 46	200 cc	**699935**
LANCER ESTATE / KOMBI	1993-1997	R134a	700 g	PAG	ISO 46	130 cc ±10	**699935**
OUTLANDER	2003-2006	R134a	550 g ±20	PAG	ISO 46	120 cc	**699935**

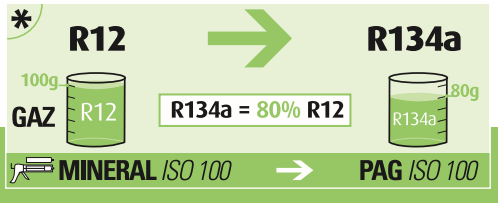

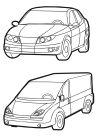

GAZ

Valeo

			GAZ				
MITSUBISHI (.../...)							
OUTLANDER		2006-	R134a	500 g	PAG	ISO 46	100 cc	**699935**
PAJERO / SHOGUN		1991-1994	R12>R134a*	800 g ±50	MIN	ISO 100	80 cc	**699936**
PAJERO / SHOGUN	With rear AC	1991-1994	R12>R134a*	1250 g ±50	MIN	ISO 100	150 cc	**699936**
PAJERO / SHOGUN		1994-2000	R134a	625 g ±25	PAG	ISO 46	80 cc	**699935**
PAJERO / SHOGUN	With rear AC	1994-2000	R134a	1025 g ±25	PAG	ISO 46	150 cc	**699935**
PAJERO / SHOGUN		2000-2006	R134a	550 g ±20	PAG	ISO 46	120 cc ±20	**699935**
PAJERO / SHOGUN	With rear AC	2000-2006	R134a	750 g ±50	PAG	ISO 46	140 cc ±20	**699935**
PAJERO		2006-	R134a	550 g	PAG	ISO 46	(1) cc	**699935**
PAJERO	with rear AC	2006-	R134a	870 g	PAG	ISO 46	(1) cc	**699935**
PAJERO / SHOGUN 2.6. 2.5 TURBO D		1988-1991	R12>R134a*	910 g	MIN	ISO 100	170 cc ±30	**699936**
PAJERO / SHOGUN 2.6. 2.5 TURBO D	With rear AC	1988-1991	R12>R134a*	1390 g	MIN	ISO 100	150 cc ±20	**699936**
PAJERO / SHOGUN 3.0		1988-1991	R12>R134a*	910 g	MIN	ISO 100	80 cc ±20	**699936**
PAJERO / SHOGUN 3.0	With rear AC	1988-1991	R12>R134a*	1390 g	MIN	ISO 100	150 cc ±20	**699936**
PAJERO / SHOGUN SPORT / CHALLENGER		1998-2006	R134a	625 g ±25	PAG	ISO 46	170 cc	**699935**
PAJERO PININ / SHOGUN LHD		1999-2006	R134a	620 g ±20	PAG	ISO 100	165 cc ±5	**699936**
PAJERO PININ / SHOGUN RHD		1999-2006	R134a	570 g ±20	PAG	ISO 100	165 cc ±5	**699936**
SPACE RUNNER / WAGON		1991-1993	R12>R134a*	800 g	MIN	ISO 100	90 cc ±10	**699936**
SPACE RUNNER / WAGON		1999-2005	R134a	550 g ±50	PAG	ISO 46	80 cc ±20	**699935**
SPACE RUNNER / WAGON	10PA15	1993-1998	R134a	720 g	PAG	ISO 46	120 cc ±20	**699935**
SPACE RUNNER / WAGON	10PA17	1993-1998	R134a	720 g	PAG	ISO 46	180 cc ±20	**699935**
SPACE STAR		1999-2006	R134a	680 g ±20	PAG	ISO 46	120 cc	**699935**
NISSAN							
200SX (S13)		1989-1994	R12>R134a*	850 g ±50	MIN	ISO 100	200 cc	**699936**
200SX (S14)		1994-2000	R134a	700 g ±100	PAG	ISO 100	200 cc	**699936**
300ZX (Z31)		1987-1990	R12>R134a*	1000 g ±100	MIN	ISO 100	150 cc	**699936**
300ZX (Z32)		1994-2000	R134a	600 g ±50	PAG	ISO 46	200 cc	**699935**
350Z		2002-2009	R134a	550 g	PAG	ISO 46	180 cc	**699935**
350Z		2009-	R134a	500 g	PAG	ISO 46	150 cc	**699935**
ALMERA (N15) LHD	Calsonic	1995-2000	R134a	650 g ±50	PAG	ISO 100	180 cc	**699936**
ALMERA (N15) LHD	Zexel	1995-2000	R134a	650 g ±50	PAG	ISO 100	200 cc	**699936**
ALMERA (N15) RHD	Calsonic	1995-2000	R134a	500 g ±50	PAG	ISO 100	180 cc	**699936**
ALMERA (N15) RHD	Zexel	1995-2000	R134a	500 g ±50	PAG	ISO 100	200 cc	**699936**
ALMERA (N16)		2000-2006	R134a	500 g ±50	PAG	ISO 46	200 cc	**699935**
ALMERA TINO (V10)		2000-2006	R134a	500 g ±50	PAG	ISO 46	200 cc	**699935**
BLUEBIRD (T12 / 72) LHD		1984-1991	R12>R134a*	1000 g ±100	MIN	ISO 100	150 cc	**699936**
BLUEBIRD (T12 / 72) RHD		1984-1991	R12>R134a*	1000 g ±100	MIN	ISO 100	200 cc	**699936**
CABSTAR (F23)		1992-05.1994	R12>R134a*	550 g ±50	MIN	ISO 100	250 cc	**699936**
CABSTAR (F23)		06.1994-2000	R134a	650 g ±50	PAG	ISO 46	250 cc	**699935**
CUBE		2010-	R134a	450 g	PAG	ISO 100	120 cc	**699936**
INTERSTAR		2002-	R134a	850 g ±50	PAG	ISO 125	220 cc	**699937**
INTERSTAR	With rear AC	2002-	R134a	1400 g ±50	PAG	ISO 125	220 cc	**699937**
JUKE		2010-	R134a	450 g	PAG	ISO 100	120 cc	**699936**
KUBISTAR		2003-	R134a	660 g ±20	PAG	ISO 46	135 cc	**699935**
MAXIMA (J30)		1988-1994	R12>R134a*	850 g ±50	MIN	ISO 100	200 cc	**699936**

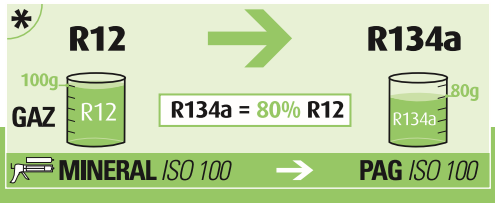

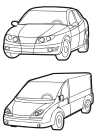

		GAZ					Valeo
NISSAN (.../...)							
MAXIMA QX (A32)	1994-2000	R134a	650 g ±50	PAG	ISO 46	250 cc	**699935**
MAXIMA QX (A33)	2000-2004	R134a	650 g ±50	PAG	ISO 46	200 cc	**699935**
MICRA (K11)	1992-03.1994	R12>R134a*	700 g ±50	MIN	ISO 100	150 cc	**699936**
MICRA (K11)	04.1994-2000	R134a	450 g ±50	PAG	ISO 100	200 cc	**699936**
MICRA (K11)	2000-2002	R134a	500 g ±50	PAG	ISO 46	200 cc	**699935**
MICRA (K12)	2003-2010	R134a	500 g ±50	PAG	ISO 100	200 cc	**699936**
MICRA (K12) 1.5 DCI	2003-2010	R134a	550 g ±50	PAG	ISO 100	200 cc	**699936**
NAVARA / PICK-UP (D22)	1998-2002	R134a	550 g ±50	PAG	ISO 100	200 cc	**699936**
NAVARA / PICK-UP (D22)	2002-2004	R134a	600 g ±50	PAG	ISO 46	200 cc	**699935**
NAVARRA	2004-	R134a	1080 g	PAG	ISO 46	280 cc	**699935**
NAVARRA with automatic AC	2004-	R134a	700 g	PAG	ISO 46	180 cc	**699935**
NAVARRA with rear AC	2004-	R134a	800 g	PAG	ISO 46	210 cc	**699935**
NOTE 1.4I	2007-	R134a	475 g ±25	PAG	ISO 100	80 cc	**699936**
NOTE 1.6I	2006-	R134a	475 g ±25	PAG	ISO 100	120 cc	**699936**
NOTE 1.5DCI	2006-	R134a	550 g ±50	PAG	ISO 100	135 cc	**699936**
PATROL (160)	1982-1989	R12>R134a*	1100 g ±100	MIN	ISO 100	270 cc	**699936**
PATROL (260)	1985-1994	R12>R134a*	900 g ±100	MIN	ISO 100	200 cc	**699936**
PATROL (Y61)	1998-2004	R134a	800 g ±50	PAG	ISO 46	300 cc	**699935**
PATROL GR (Y60)	1987-06.1994	R12>R134a*	1000 g ±100	MIN	ISO 100	200 cc	**699936**
PATROL GR (Y60)	07.1994-1998	R134a	600 g ±50	PAG	ISO 46	200 cc	**699935**
PICK-UP (D21)	03.1992-1998	R134a	800 g ±50	PAG	ISO 100	200 cc	**699936**
PIXO	2009-	R134a	450 g	PAG	ISO 100	65 cc	**699936**
PRAIRIE (M10)	1986-1989	R12>R134a*	1000 g ±100	MIN	ISO 100	150 cc	**699936**
PRAIRIE (M10) With rear AC	1986-1989	R12>R134a*	1400 g ±100	MIN	ISO 100	240 cc	**699936**
PRAIRIE (M11) 2.0	1989-1994	R12>R134a*	900 g ±50	MIN	ISO 100	150 cc	**699936**
PRAIRIE (M11) 2.4 LHD	1992-1995	R12>R134a*	900 g ±50	MIN	ISO 100	200 cc	**699936**
PRAIRIE (M11) 2.4 RHD	1992-1995	R12>R134a*	750 g ±50	MIN	ISO 100	200 cc	**699936**
PRIMASTAR	2002-2006	R134a	700 g ±25	PAG	ISO 125	220 cc ±15	**699937**
PRIMASTAR	2006-	R134a	750 g	PAG	ISO 150	220 cc	**699937**
PRIMASTAR With rear AC	2006-	R134a	1050 g	PAG	ISO 150	240 cc	**699937**
PRIMERA (P10)	09.1993-1996	R134a	750 g ±50	PAG	ISO 100	200 cc	**699936**
PRIMERA (P10) LHD	1990-08.1993	R12>R134a*	750 g ±50	MIN	ISO 100	200 cc	**699936**
PRIMERA (P10) RHD	1990-08.1993	R12>R134a*	800 g ±50	MIN	ISO 100	200 cc	**699936**
PRIMERA (P11)	1996-1999	R134a	600 g ±50	PAG	ISO 100	180 cc	**699936**
PRIMERA (P11-144) 1.6 ENG. / MOT. GA16DE	1999-2001	R134a	600 g ±50	PAG	ISO 100	180 cc	**699936**
PRIMERA (P11-144) 1.6 ENG. / MOT. QG16DE	2001-2002	R134a	600 g ±50	PAG	ISO 46	200 cc	**699935**
PRIMERA (P11-144) 1.8. 2.0	1999-2002	R134a	600 g ±50	PAG	ISO 46	200 cc	**699935**
PRIMERA (P11-144) 2.0 D TURBO	1999-2002	R134a	600 g ±50	PAG	ISO 100	180 cc	**699936**
PRIMERA (P12)	2002-2007	R134a	500 g	PAG	ISO 46	180 cc	**699935**
PRIMERA (W10)	1990-08.1993	R12>R134a*	750 g ±50	MIN	ISO 100	200 cc	**699936**
PRIMERA (W10) Calsonic	09.1993-1996	R134a	600 g ±50	PAG	ISO 100	180 cc	**699936**
PRIMERA (W10) Zexel	09.1993-1996	R134a	600 g ±50	PAG	ISO 100	200 cc	**699936**
QASHQAI	2007-	R134a	450 g	PAG	ISO 46	150 cc	**699935**
SERENA / VANETTE CARGO LHD	1992-06.1996	R134a	675 g ±50	PAG	ISO 46	250 cc	**699935**

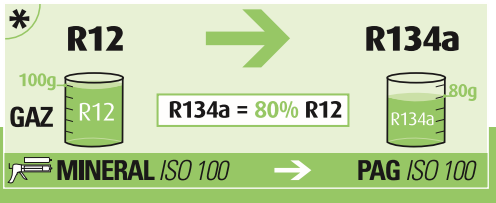

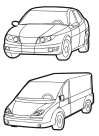

GAZ

Valeo

			GAZ				Valeo
NISSAN (.../...)							
SERENA / VANETTE CARGO LHD	With rear AC	1992-06.1996	R134a	625 g ±50	PAG	ISO 46	250 cc	**699935**
SERENA / VANETTE CARGO LHD		07.1996-2004	R134a	625 g ±50	PAG	ISO 46	250 cc	**699935**
SERENA / VANETTE CARGO LHD	With rear AC	07.1996-2004	R134a	675 g ±50	PAG	ISO 46	250 cc	**699935**
SERENA / VANETTE CARGO RHD		1992-06.1996	R134a	650 g ±50	PAG	ISO 46	250 cc	**699935**
SERENA / VANETTE CARGO RHD	With rear AC	1992-06.1996	R134a	775 g ±50	PAG	ISO 46	250 cc	**699935**
SERENA / VANETTE CARGO RHD		07.1996-2004	R134a	600 g ±50	PAG	ISO 46	250 cc	**699935**
SERENA / VANETTE CARGO RHD	With rear AC	07.1996-2004	R134a	625 g ±50	PAG	ISO 46	250 cc	**699935**
SUNNY (B12 / N13) LHD		1986-1991	R12>R134a*	1000 g ±100	MIN	ISO 100	150 cc	**699936**
SUNNY (B12 / N13) RHD		1986-1991	R12>R134a*	1000 g ±100	MIN	ISO 100	200 cc	**699936**
SUNNY (N14 / B13)		10.1992-1995	R134a	750 g ±50	PAG	ISO 100	200 cc	**699936**
SUNNY ESTATE / KOMBI (Y10)		04.1994-1996	R134a	700 g ±50	PAG	ISO 100	190 cc ±10	**699936**
SUNNY ESTATE / KOMBI (Y10) LHD		1992-03.1994	R134a	750 g ±50	PAG	ISO 100	200 cc	**699936**
SUNNY ESTATE / KOMBI (Y10) RHD		1992-03.1994	R12>R134a*	600 g ±50	MIN	ISO 100	200 cc	**699936**
TERRANO (WD21)		1987-1992	R12>R134a*	850 g ±50	MIN	ISO 100	200 cc	**699936**
TERRANO II (R20)		1993-2007	R134a	750 g ±50	PAG	ISO 100	200 cc	**699936**
TIIDA		2007-	R134a	450 g ±50	PAG	ISO 100	120 cc	**699936**
URVAN (E24)		1987-1994	R12>R134a*	850 g ±50	MIN	ISO 100	250 cc	**699936**
URVAN (E24)	With rear AC	1987-1994	R12>R134a*	1200 g ±50	MIN	ISO 100	250 cc	**699936**
URVAN (E24)		07.1994-1996	R134a	950 g ±50	PAG	ISO 46	250 cc	**699935**
URVAN (E24)	With rear AC	07.1994-1996	R134a	1200 g ±50	PAG	ISO 46	250 cc	**699935**
X-TRAIL		2001-2007	R134a	500 g	PAG	ISO 46	180 cc	**699935**
X-TRAIL		2007-	R134a	450 g	PAG	ISO 46	150 cc	**699935**
NISSAN							
ATLEON	Ch. 514 110->	1999-	R134a	750 g	PAG	ISO 46	260 cc ±10	**699935**
ATLEON 110	140 Ch.-> 514109	1999-	R134a	900 g ±50	PAG	ISO 46	260 cc ±10	**699935**
ATLEON 165	210 Ch.-> 514109	1999-	R134a	950 g ±50	PAG	ISO 46	260 cc ±10	**699935**
OPEL							
AGILA		2000-2007	R134a	500 g	PAG	ISO 125	150 cc ±10	**699937**
AGILA 1,0L. 1,2L.		2007-	R134a	370 g	PAG	ISO 46	90 cc	**699935**
AGILA 1,3L. CDTI		2007-	R134a	370 g	PAG	ISO 46	120 cc	**699935**
ANTARA 2,0L. D		2006-	R134a	520 g	PAG	ISO 46	150 cc	**699935**
ANTARA 2,4I 3,2I		2006-	R134a	660 g	PAG	ISO 46	150 cc	**699935**
ASTRA / BELMONT / KADETT E		1984-1991	R12>R134a*	1000 g	MIN	ISO 100	(1) cc	**699936**
ASTRA F		1991-1994	R134a	700 g	PAG	ISO 125	295 cc	**699937**
ASTRA F		1994-1998	R134a	800 g	PAG	ISO 125	155 cc	**699937**
ASTRA G		1998-2002	R134a	700 g	PAG	ISO 46	120 cc	**699935**
ASTRA G		2002-2006	R134a	600 g	PAG	ISO 46	150 cc	**699935**
ASTRA G 1.7. 2.0. 2.2 DIESEL / 1.6. 2.2		2002-2006	R134a	600 g	PAG	ISO 46	120 cc	**699935**
ASTRA G 2.0 TURBO ENG. / MOT. Z20LET		2002-2006	R134a	700 g	PAG	ISO 46	150 cc	**699935**
ASTRA H 1.3 DIESEL / 1.4. 1.6. 1.8		2004-2009	R134a	475 g	PAG	ISO 46	150 cc	**699935**
ASTRA H 1.7 DIESEL		2004-2009	R134a	500 g	PAG	ISO 46	120 cc	**699935**
ASTRA H 1.9 DIESEL		2004-2009	R134a	475 g	PAG	ISO 46	135 cc	**699935**
ASTRA H 2.0		2004-2009	R134a	500 g	PAG	ISO 46	150 cc	**699935**
ASTRA J		2009-	R134a	600 g	PAG	ISO 46	125 cc	**699935**

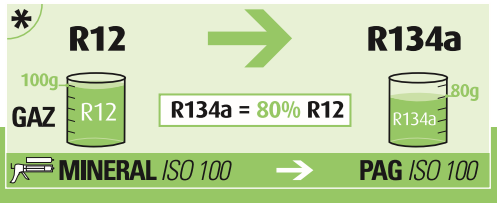

		GAZ				Valeo
OPEL (.../...)						
ASTRA J 1,4L 1,6L with automatic gear	2009-	R134a	630 g	PAG	ISO 46	125 cc	**699935**
BRAVA DIESEL	1990-2002	R134a	750 g	PAG	ISO 46	260 cc	**699935**
CALIBRA	1990-1993	R12>R134a*	1100 g	MIN	ISO 100	240 cc	**699936**
CALIBRA Old type	1993-1997	R134a	750 g	PAG	ISO 125	295 cc	**699937**
CALIBRA New type	1994-1997	R134a	1000 g	PAG	ISO 125	295 cc	**699937**
COMBO II DIESEL	2004-2010	R134a	560 g	PAG	ISO 46	120 cc	**699935**
COMBO II PETROL	2004-2010	R134a	650 g	PAG	ISO 46	150 cc	**699935**
CORSA B / COMBO	1993-2000	R134a	900 g	PAG	ISO 46	295 cc	**699935**
CORSA C	2000-2006	R134a	650 g	PAG	ISO 46	150 cc	**699935**
CORSA C DI	2000-2003	R134a	650 g	PAG	ISO 46	120 cc	**699935**
CORSA C DI	2004-2005	R134a	560 g	PAG	ISO 46	120 cc	**699935**
CORSA C DTI / CDTI	2000-2006	R134a	560 g	PAG	ISO 46	120 cc	**699935**
CORSA D	2007-	R134a	470 g	PAG	ISO 46	80 cc	**699935**
FRONTERA	1991-02.1995	R134a	800 g	PAG	(1)	200 cc	
FRONTERA	03.1995-08.1996	R134a	750 g	PAG	(1)	200 cc	
FRONTERA	09.1996-1998	R134a	650 g	PAG	(1)	200 cc	
FRONTERA DIESEL	03.1995-08.1996	R134a	700 g	PAG	(1)	200 cc	
FRONTERA B GAS	1998-2004	R134a	650 g	PAG	(1)	270 cc ±15	
FRONTERA B DIESEL	1998-2004	R134a	700 g	PAG	(1)	270 cc ±15	
INSIGNIA Sanden	2008-	R134a	600 g	PAG	ISO 46	110 cc	**699935**
INSIGNIA Delphi	2008-	R134a	600 g	PAG	ISO 46	150 cc	**699935**
MERIVA	2003-2010	R134a	690 g	PAG	ISO 46	150 cc	**699935**
MERIVA	2010-	R134a	580 g	PAG	ISO 46	125 cc	**699935**
MONTEREY	1992-1994	R12>R134a*	850 g	MIN	ISO 100	270 cc	**699936**
MONTEREY	1994-1998	R134a	750 g	PAG	ISO 100	270 cc	**699936**
MONTEREY DIESEL	1994-1998	R134a	750 g	PAG	ISO 46	270 cc	**699935**
MOVANO	1998-2003	R134a	850 g ±50	PAG	ISO 46	135 cc	**699935**
MOVANO Sanden	2003-2010	R134a	850 g ±35	PAG	ISO 46	135 cc	**699935**
MOVANO Delphi	2003-2010	R134a	850 g ±35	PAG	ISO 125	220 cc	**699937**
OMEGA A / CARLTON	1986-1994	R12>R134a*	1100 g	MIN	ISO 100	240 cc	**699936**
OMEGA B	1994-1996	R134a	950 g	PAG	ISO 125	250 cc	**699937**
OMEGA B	1996-2003	R134a	950 g	PAG	ISO 125	250 cc	**699937**
OMEGA B 2.0D. 2.2D	1998-2000	R134a	950 g	PAG	ISO 125	295 cc	**699937**
OMEGA B 2.2D	2000-2003	R134a	950 g	PAG	ISO 125	295 cc	**699937**
OMEGA B 2.5D TURBO	1994-2001	R134a	950 g	PAG	ISO 46	155 cc	**699935**
SENATOR	1988-1993	R12>R134a*	1100 g	MIN	ISO 100	240 cc	**699936**
SINTRA	1996-1999	R134a	910 g	PAG	ISO 125	265 cc	**699937**
TIGRA	1995-2000	R134a	900 g	PAG	ISO 46	295 cc	**699935**
TIGRA TWIN TOP	2004-2009	R134a	650 g	PAG	ISO 46	150 cc	**699935**
VECTRA A / CAVALIER III	1988-1993	R12>R134a*	1100 g	MIN	ISO 100	240 cc	**699936**
VECTRA A / CAVALIER III Old type	1993-1995	R134a	750 g	PAG	ISO 125	295 cc	**699937**
VECTRA A / CAVALIER III New type	1994-1995	R134a	1000 g	PAG	ISO 125	295 cc	**699937**
VECTRA B	1995-2002	R134a	900 g	PAG	ISO 125	295 cc	**699937**
VECTRA B 1.7D TURBO	1995-1996	R134a	900 g	PAG	ISO 46	155 cc	**699935**

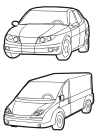

GAZ

Valeo

		GAZ				
OPEL (.../...)						
VECTRA B 2.0D TURBO ENG. / MOT. X20DTH	1997-2002	R134a	750 g	PAG	ISO 125	295 cc	**699937**
VECTRA B 2.5. 2.6	1995-2002	R134a	900 g	PAG	ISO 46	120 cc	**699935**
VECTRA C / SIGNUM	2002-2008	R134a	730 g	PAG	ISO 46	120 cc	**699935**
VECTRA C / SIGNUM 1.9 DIESEL	2002-2008	R134a	730 g	PAG	ISO 46	135 cc	**699935**
VECTRA C / SIGNUM 3.0 DIESEL	2002-2008	R134a	680 g	PAG	ISO 46	120 cc	**699935**
VIVARO M9R ENG.	2002-2006	R134a	650 g	PAG	ISO 125	220 cc ±15	**699937**
VIVARO M9R ENG. with rear AC	2002-2006	R134a	950 g	PAG	ISO 125	220 cc ±15	**699937**
VIVARO F4R, F9Q, G9U ENG.	2002-2006	R134a	750 g	PAG	ISO 125	220 cc ±15	**699937**
VIVARO F4R, F9Q, G9U ENG. with rear AC	2002-2006	R134a	1150 g	PAG	ISO 125	220 cc ±15	**699937**
ZAFIRA	1998-2001	R134a	700 g	PAG	ISO 46	120 cc ±10	**699935**
ZAFIRA With rear AC	1998-2001	R134a	950 g	PAG	ISO 46	240 cc ±10	**699935**
ZAFIRA	2002-2005	R134a	600 g	PAG	ISO 46	120 cc ±10	**699935**
ZAFIRA With rear AC	2002-2005	R134a	800 g	PAG	ISO 46	240 cc ±10	**699935**
ZAFIRA 2.0 TURBO	2001-2005	R134a	700 g	PAG	ISO 46	120 cc ±10	**699935**
ZAFIRA 2.0 TURBO With rear AC	2001-2005	R134a	950 g	PAG	ISO 46	240 cc ±10	**699935**
ZAFIRA 2.0 TURBO With rear AC	2002-2005	R134a	800 g	PAG	ISO 46	240 cc ±10	**699935**
ZAFIRA II 1.6. 1.8. 2.2	2005-2006	R134a	475 g	PAG	ISO 46	120 cc	**699935**
ZAFIRA II 1.6. 1.8. 2.2	2006-	R134a	450 g	PAG	ISO 46	120 cc	**699935**
ZAFIRA II 2.0 TURBO	2005-	R134a	475 g	PAG	ISO 46	150 cc	**699935**
ZAFIRA II DIESEL	2005-	R134a	475 g	PAG	ISO 46	135 cc	**699935**
ZAFIRA III	2011-	R134a	630 g	PAG	ISO 46	125 cc	**699935**
PEUGEOT						
106	1991-1993	R12>R134a*	875 g ±25	MIN	ISO 100	(1) cc	**699936**
106	1993-1994	R12>R134a*	975 g ±25	MIN	ISO 100	115 cc	**699936**
106	1994-1996	R134a	875 g ±25	PAG	ISO 46	135 cc ±15	**699935**
106	1996-2003	R134a	825 g ±10	PAG	ISO 46	135 cc ±15	**699935**
106 DIESEL. 1.6 GTI	1996-2003	R134a	750 g	PAG	ISO 46	135 cc ±15	**699935**
107 1.0 I	2005-	R134a	450 g ±25	PAG	ISO 100	80 cc	**699936**
107 HDI	2005-	R134a	500 g ±30	PAG	ISO 100	80 cc	**699936**
205	1986-1993	R12>R134a*	900 g	MIN	ISO 100	175 cc	**699936**
205	1993-1998	R134a	675 g	PAG	ISO 100	135 cc ±15	**699936**
206	1998-2010	R134a	700 g ±20	PAG	ISO 46	135 cc ±15	**699935**
206 2.0I	1999-2010	R134a	650 g ±20	PAG	ISO 46	135 cc ±15	**699935**
207 1.4HDI. 1.6HDI	2006-	R134a	450 g ±25	PAG	ISO 46	135 cc ±15	**699935**
207 1.4I. 1.6I	2006-	R134a	450 g ±25	PAG	ISO 46	135 cc ±15	**699935**
208 1.0 1.2	2012-	R134a	450 g ±25	PAG	ISO 46	70 cc	**699935**
208 1.4 1.6 1.4HDI 1.6HDI	2012-	R134a	450 g ±25	PAG	ISO 46	110 cc	**699935**
305	1985-1990	R12>R134a*	800 g ±20	MIN	ISO 100	170 cc	**699936**
306	1993-1997	R134a	900 g ±25	PAG	ISO 46	135 cc ±15	**699935**
306	1997-2002	R134a	725 g ±25	PAG	ISO 46	135 cc ±15	**699935**
307. 307 CC	2001-2006	R134a	585 g ±25	PAG	ISO 46	135 cc ±15	**699935**
308 DIESEL	2007-	R134a	450 g ±25	PAG	ISO 46	135 cc	**699935**
308 GAS	2007-	R134a	450 g ±25	PAG	ISO 46	80 cc	**699935**
309	1986-1993	R12>R134a*	900 g	MIN	ISO 100	175 cc	**699936**

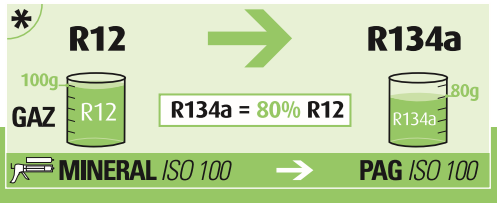

			GAZ				Valeo
PEUGEOT (.../...)							
405		1987-1993	R12>R134a*	1100 g ±25	MIN	ISO 100	135 cc	**699936**
405 II	Sanden SD7H13/15	1994-1997	R134a	675 g	PAG	ISO 100	135 cc ±15	**699936**
405 II	Sanden SD7H12/16	1994-1997	R134a	675 g	PAG	ISO 46	135 cc ±15	**699935**
406	Delphi	1995-1999	R134a	750 g	PAG	ISO 125	265 cc ±15	**699937**
406	Sanden	1995-1999	R134a	800 g ±20	PAG	ISO 46	135 cc ±15	**699935**
406 1.6. 1.8. 2.0. 406 COUPE ENG. / MOT. XU		1999-2002	R134a	775 g ±25	PAG	ISO 46	135 cc ±15	**699935**
406 2.0 HDI. 2.2 HDI		1999-2005	R134a	600 g ±25	PAG	ISO 125	265 cc ±15	**699937**
406 2.0. 406 COUPE 2.0 ENG. / MOT. EW10		1999-2005	R134a	625 g ±25	PAG	ISO 46	135 cc ±15	**699935**
406 V6. 406 COUPE V6		1997-2005	R134a	750 g	PAG	ISO 46	135 cc ±15	**699935**
407		2004-	R134a	600-700 g ±25	PAG	ISO 46	135 cc ±15	**699935**
407 4HT 2.2HDI. UHZ 2.7HDI		2004-	R134a	525 g ±25	PAG	ISO 46	135 cc ±15	**699935**
407 COUPE		2004-	R134a	625 g ±25	PAG	ISO 46	135 cc ±15	**699935**
4007		2007-	R134a	500 g	PAG	ISO 46	90 cc	**699935**
505		1984-1991	R12>R134a*	1000 g	MIN	ISO 100	175 cc	**699936**
505 DIESEL		1984-1991	R12>R134a*	900 g	MIN	ISO 100	135 cc	**699936**
508		2011-	R134a	525 g	PAG	ISO 46	135 cc	**699935**
605		1989-1993	R12>R134a*	1100 g	MIN	ISO 100	135 cc	**699936**
605		1994-1999	R134a	885 g	PAG	ISO 46	135 cc ±15	**699935**
605 2.5D TURBO		1995-1999	R134a	850 g	PAG	ISO 46	135 cc ±15	**699935**
605 V6 ENG. / MOT. ESJ		1997-1999	R134a	875 g	PAG	ISO 46	135 cc ±15	**699935**
607		2000-2010	R134a	625 g ±20	PAG	ISO 46	135 cc ±15	**699935**
806		1994-2002	R134a	975 g ±25	PAG	ISO 46	135 cc ±15	**699935**
807		2002-	R134a	600 g ±25	PAG	ISO 46	135 cc ±15	**699935**
1007		2005-2009	R134a	600 g ±25	PAG	ISO 46	135 cc ±15	**699935**
3008 DIESEL		2009-	R134a	450 g	PAG	ISO 46	135 cc	**699935**
3008 GAS		2009-	R134a	450 g	PAG	ISO 46	120 cc	**699935**
5008 DIESEL		2009-	R134a	450 g	PAG	ISO 46	135 cc	**699935**
5008 GAS		2009-	R134a	450 g	PAG	ISO 46	120 cc	**699935**
BIPPER		2008-	R134a	500 g ±25	PAG	ISO 46	135 cc ±10	**699935**
BOXER		1994-09.1996	R134a	1000 g ±50	PAG	ISO 100	135 cc	**699936**
BOXER	With rear AC	1994-09.1996	R134a	1200 g ±50	PAG	ISO 100	135 cc	**699936**
BOXER		10.1996-12.2001	R134a	800 g ±50	PAG	ISO 100	135 cc	**699936**
BOXER	With rear AC	10.1996-12.2001	R134a	1000 g ±50	PAG	ISO 100	135 cc	**699936**
BOXER		2002-2006	R134a	800 g ±50	PAG	ISO 100	135 cc	**699936**
BOXER	With rear AC	2002-2006	R134a	1000 g	PAG	ISO 100	135 cc	**699936**
BOXER		2006-	R134a	550 g ±25	PAG	ISO 46	200 cc ±20	**699935**
BOXER	With rear AC	2006-	R134a	950 g ±25	PAG	ISO 46	220 cc ±20	**699935**
EXPERT		1995-2007	R134a	975 g ±25	PAG	ISO 46	135 cc ±15	**699935**
EXPERT DIESEL		2007-	R134a	540 g ±25	PAG	ISO 46	135 cc	**699935**
EXPERT DIESEL	With rear AC, long wheelbase	2007-	R134a	950 g ±25	PAG	ISO 46	160 cc	**699935**
EXPERT DIESEL	With rear AC, short wheelbase	2007-	R134a	850 g ±25	PAG	ISO 46	160 cc	**699935**
EXPERT GAS		2007-	R134a	675 g ±25	PAG	ISO 46	135 cc	**699935**
EXPERT GAS	With rear AC, long wheelbase	2007-	R134a	1075 g ±25	PAG	ISO 46	160 cc	**699935**
EXPERT GAS	With rear AC, short wheelbase	2007-	R134a	950 g ±25	PAG	ISO 46	160 cc	**699935**

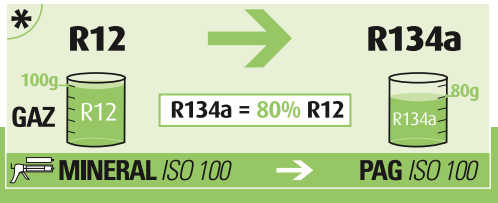

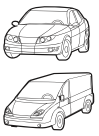

GAZ

Valeo

		GAZ				Valeo
PEUGEOT (.../...)						
PARTNER	1996-	R134a	875 g ±25	PAG	ISO 46	135 cc ±15	**699935**
PARTNER	2008-	R134a	575 g ±25	PAG	ISO 46	135 cc ±15	**699935**
PARTNER DIESEL	1996-	R134a	775 g ±25	PAG	ISO 46	135 cc ±15	**699935**
RCZ	2010-	R134a	425 g	PAG	ISO 46	120 cc	**699935**
PORSCHE						
911	1984-1993	R12>R134a*	1350 g	MIN	ISO 100	120 cc ±20	**699936**
928	1990-1993	R12>R134a*	950 g	MIN	ISO 100	280 cc ±20	**699936**
928 With rear AC	1990-1993	R12>R134a*	1150 g	MIN	ISO 100	280 cc ±20	**699936**
944	1985-1992	R12>R134a*	950 g	MIN	ISO 100	80 cc ±20	**699936**
968	1992-1995	R12>R134a*	950 g	MIN	ISO 100	80 cc ±20	**699936**
968	1993-1995	R134a	860 g	PAG	ISO 46	120 cc ±20	**699935**
911 (993)	1993-1997	R134a	840 g	PAG	ISO 46	100 cc ±20	**699935**
911 (996)	1997-2004	R134a	900 g	PAG	ISO 46	195 cc ±15	**699935**
911 (997)	2004-	R134a	900 g	PAG	ISO 46	195 cc ±15	**699935**
BOXSTER (986)	1997-2004	R134a	850 g	PAG	ISO 46	195 cc ±15	**699935**
BOXTER (987)	2004-	R134a	900 g	PAG	ISO 46	195 cc ±15	**699935**
CAYENNE	2002- 2010	R134a	700 g	PAG	ISO 46	200 cc ±20	**699935**
CAYENNE with rear AC	2002- 2010	R134a	1050 g	PAG	ISO 46	300 cc ±20	**699935**
CAYENNE	2010-	R134a	700 g	PAG	ISO 46	140 cc ±20	**699935**
CAYENNE with rear AC	2010-	R134a	1050 g	PAG	ISO 46	240 cc ±20	**699935**
CAYMAN	2005-	R134a	900 g	PAG	ISO 46	195 cc ±15	**699935**
PROTON						
IMPIAN	2001-2003	R134a	575 g ±25	PAG	ISO 46	120 cc	**699935**
WAJA	2001-2003	R134a	575 g ±25	PAG	ISO 46	120 cc	**699935**
RENAULT						
ALPINE	1986-1992	R12>R134a*	925 g ±25	MIN	ISO 100	(1) cc	**699936**
ALPINE	1992-1994	R12>R134a*	1125 g ±50	MIN	ISO 100	135 cc ±15	**699936**
AVANTIME 2.0I TURBO / 2.2 DCI	2000-2003	R134a	800 g ±35	PAG	ISO 125	220 cc	**699937**
AVANTIME 3.0I 24V	2000-2003	R134a	800 g ±35	PAG	ISO 46	135 cc	**699935**
CLIO	1990-1994	R12>R134a*	925 g ±50	MIN	ISO 100	135 cc ±15	**699936**
CLIO	1994-1998	R134a	660 g ±35	PAG	ISO 46	135 cc ±15	**699935**
CLIO II	1998-2006	R134a	660 g ±35	PAG	ISO 46	135 cc	**699935**
CLIO II 2.0 I 16V	1999-2005	R134a	710 g ±35	PAG	ISO 46	135 cc	**699935**
CLIO III	2005-	R134a	530 g ±35	PAG	ISO 46	135 cc ±10	**699935**
CLIO GRANDTOUR Delphi	2008-	R134a	530 g ±30	PAG	ISO 150	150 cc ±10	**699937**
CLIO GRANDTOUR Sanden	2008-	R134a	530 g ±30	PAG	ISO 46	135 cc ±10	**699935**
ESPACE II	1991-1994	R12>R134a*	1400 g ±100	MIN	ISO 100	135 cc ±15	**699936**
ESPACE II	1994-1997	R134a	1250 g ±25	PAG	ISO 100	135 cc ±15	**699936**
ESPACE III 1.9 D TURBO	1999-2002	R134a	720 g ±35	PAG	ISO 46	135 cc ±15	**699935**
ESPACE III 2.0 / 3.0 ENG. / MOT.F3R / Z7X	1996-2002	R134a	720 g ±35	PAG	ISO 100	135 cc ±15	**699936**
ESPACE III 2.0 ENG. / MOT.F4R	1996-2002	R134a	750 g ±35	PAG	ISO 100	135 cc ±15	**699936**
ESPACE III 2.2 D TURBO	1996-2002	R134a	700 g ±35	PAG	ISO 100	135 cc ±15	**699936**
ESPACE III V6 24V ENG. / MOT.L7X	1998-2002	R134a	890 g ±35	PAG	ISO 46	135 cc	**699935**
ESPACE IV 2.0I / 1.9 DCI	2002-	R134a	1000 g ±35	PAG	ISO 46	200 cc	**699935**

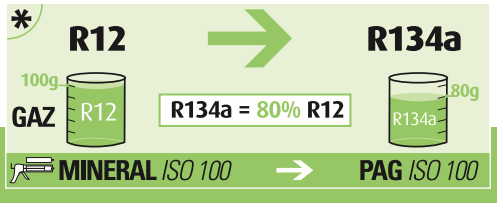

		GAZ					Valeo
RENAULT (.../...)							
ESPACE IV 2.2 DCI Calsonic	2002-	R134a	1000 g ±35	PAG	ISO 125	220 cc	**699937**
ESPACE IV 2.2 DCI / 3.0 DCI / 3.5	2002-	R134a	1000 g ±35	PAG	ISO 46	220 cc ±10	**699935**
ESPACE IV 3.5 V6 Delphi 7CVCE	2002-	R134a	1000 g ±35	PAG	ISO 125	220 cc	**699937**
EXPRESS / EXTRA / RAPID	1994-2001	R134a	680 g ±35	PAG	ISO 46	135 cc ±15	**699935**
FLUENCE	2010-	R134a	530 g ±30	PAG	ISO 46	150 cc ±10	**699935**
KANGOO	1998-2008	R134a	650 g ±35	PAG	ISO 46	135 cc ±15	**699935**
KANGOO	2008-	R134a	550 g ±35	PAG	ISO 46	150 cc ±10	**699935**
KOLEOS	2008-	R134a	550 g ±35	PAG	ISO 46	120 cc ±10	**699935**
LAGUNA	1994-2001	R134a	700 g ±30	PAG	ISO 46	135 cc ±15	**699935**
LAGUNA 1.6 / 1.8 / 2.0 / 1.9D / 2.2D TURBO	1998-2001	R134a	700 g ±35	PAG	ISO 46	135 cc ±15	**699935**
LAGUNA 2.2D / 2.0 LPG / 3.0	1996-2001	R134a	780 g ±35	PAG	ISO 46	135 cc ±15	**699935**
LAGUNA II	2000-2007	R134a	650 g ±35	PAG	ISO 125	265 cc	**699937**
LAGUNA II Sanden	2000-2007	R134a	650 g ±35	PAG	ISO 46	135 cc	**699935**
LAGUNA II Calsonic	2000-2007	R134a	650 g ±35	PAG	ISO 125	220 cc	**699937**
LAGUNA II Denso	2000-2007	R134a	650 g ±35	PAG	ISO 46	220 cc	**699935**
LAGUNA III	2007-	R134a	650 g ±35	PAG	ISO 46	150 cc	**699935**
MASTER (97-2003)	1998-2003	R134a	850 g ±50	PAG	ISO 46	135 cc	**699935**
MASTER (97-2003) Delphi	2001-2003	R134a	850 g ±35	PAG	ISO 125	220 cc	**699937**
MASTER (2003-) Sanden	2003-2010	R134a	850 g ±35	PAG	ISO 46	135 cc	**699935**
MASTER (2003-) Delphi	2003-2010	R134a	850 g ±35	PAG	ISO 125	220 cc	**699937**
MASTER	2010-	R134a	590 g	PAG	ISO 46	125 cc	**699935**
MÉGANE (95-99) Delphi	1995-1999	R134a	750 g ±35	PAG	ISO 125	220 cc	**699937**
MÉGANE (95-99) Sanden	1995-1999	R134a	765 g ±50	PAG	ISO 46	135 cc	**699935**
MÉGANE (98-2002) Delphi	1999-2002	R134a	750 g ±35	PAG	ISO 125	220 cc	**699937**
MÉGANE (98-2002) ENG. / MOT. K4J / K4M Delphi 6CVC	1999-2002	R134a	700 g ±35	PAG	ISO 46	150 cc	**699935**
MÉGANE II	2002-2008	R134a	550 g ±35	PAG	ISO 46	150 cc	**699935**
MÉGANE III	2008-	R134a	480 g ±35	PAG	ISO 46	120 cc ±10	**699935**
MÉGANE SCÉNIC (96-99)	1996-1999	R134a	800 g ±35	PAG	ISO 46	135 cc	**699935**
MÉGANE SCÉNIC (96-99) Delphi V5	1996-1999	R134a	800 g ±35	PAG	ISO 125	220 cc	**699937**
MÉGANE SCÉNIC (99-2003) LHD	1999-2003	R134a	680 g ±35	PAG	ISO 125	220 cc	**699937**
MÉGANE SCÉNIC (99-2003) RHD	1999-2003	R134a	780 g ±35	PAG	ISO 125	220 cc	**699937**
MODUS	2004-	R134a	510 g ±35	PAG	ISO 46	135 cc	**699935**
R9	1983-1989	R12>R134a*	775 g ±25	MIN	ISO 100	135 cc ±15	**699936**
R11	1983-1989	R12>R134a*	775 g ±25	MIN	ISO 100	135 cc ±15	**699936**
R19	1994-1996	R134a	800 g ±35	PAG	ISO 46	135 cc ±15	**699935**
R19 1.4 / 1.9 DIESEL	1988-1994	R12>R134a*	1050 g	MIN	ISO 100	(1) cc	**699936**
R19 1.7	1993-1994	R12>R134a*	1050 g	MIN	ISO 100	(1) cc	**699936**
R19 1.7I	1993-1994	R12>R134a*	750 g	MIN	ISO 100	(1) cc	**699936**
R19 1.8	1992-1994	R12>R134a*	750 g	MIN	ISO 100	(1) cc	**699936**
R19 1.8 16V / 1.9 D TURBO	1989-1994	R12>R134a*	850 g	MIN	ISO 100	(1) cc	**699936**
R21	1986-1994	R12>R134a*	950 g ±50	MIN	ISO 100	135 cc ±15	**699936**
R21	1994-1995	R134a	800 g ±35	PAG	ISO 100	(1) cc	**699936**
R25 Sanden SD709	1984-1993	R12>R134a*	950 g ±50	MIN	ISO 100	135 cc ±15	**699936**
R25 Sanden SD508/51	1984-1993	R12>R134a*	1050 g ±50	MIN	ISO 100	(1) cc	**699936**

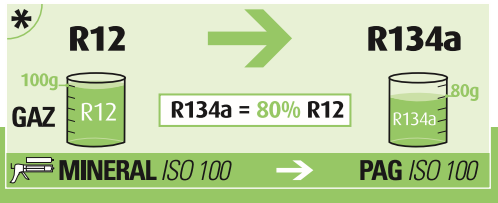

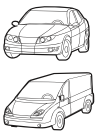

GAZ

Valeo

		GAZ					Valeo
RENAULT (.../...)							
SAFRANE	1992-1994	R12>R134a*	1075 g ±50	MIN	ISO 100	135 cc ±15	699936
SAFRANE	1995-2001	R134a	810 g ±35	PAG	ISO 46	135 cc ±15	699935
SCÉNIC II	2003-2009	R134a	550 g ±35	PAG	ISO 46	150 cc	699935
SCÉNIC III 2,0L	2009-	R134a	510 g ±35	PAG	ISO 46	150 cc	699935
SCÉNIC III 1,5L.DCI 1,9L.DCI 2,0L.DCI 1,4L. 1,6L.	2009-	R134a	480 g ±35	PAG	ISO 46	110 cc	699935
GRAND SCÉNIC III 2,0L	2009-	R134a	510 g ±35	PAG	ISO 46	150 cc	699935
GRAND SCÉNIC III 1,5L.DCI 1,9L.DCI 2,0L. DCI 1,4L. 1,6L.	2009-	R134a	480 g ±35	PAG	ISO 46	110 cc	699935
SUPER 5	1985-1994	R12>R134a*	775 g ±25	MIN	ISO 100	175 cc ±15	699936
TRAFIC (2001-)	2001-	R134a	750 g ±35	PAG	ISO 125	220 cc	699937
TRAFIC (2001-) With rear AC	2001-	R134a	1050 g ±35	PAG	ISO 125	220 cc	699937
TWINGO ENG. / MOT.C3G	1993-1997	R134a	650 g ±35	PAG	ISO 46	135 cc	699935
TWINGO ENG. / MOT.D7F SD7V16	1996-2007	R134a	750 g ±45	PAG	ISO 46	135 cc	699935
TWINGO ENG. / MOT.D7F / D4F SD6V12	1996-2007	R134a	700 g ±35	PAG	ISO 46	135 cc	699935
TWINGO III DIESEL / GASOLINE 16S	2007-	R134a	510 g ±30	PAG	ISO 46	135 cc	699935
TWINGO III GASOLINE	2007-	R134a	430 g ±35	PAG	ISO 46	135 cc	699935
VEL SATIS	2000-2006	R134a	650 g ±35	PAG	ISO 125	250 cc	699937
RENAULT V.I.							
MIDLUM Clim 488/Sanden SP 10	1999-	R134a	1200 g	ISO46	ISO 46	165 cc	699935
KERAX	1997-1999	R134a	1400 g	PAG	ISO 100	165 cc	699936
MAGNUM	1996-1999	R134a	1450 g	PAG	ISO 100	165 cc	699936
MAGNUM E.TECH	2000-	R134a	1450 g	PAG	ISO 100	165 cc	699936
MASTER	1998-	R134a	850 g ±50	PAG	ISO 46	135 cc	699935
MAXITY	2007-	R134a	300 g	PAG	ISO 46	150 cc	699935
PREMIUM	1996-2006	R134a	1400 g	PAG	ISO 100	165 cc	699936
PREMIUM 2	2006-	R134a	1200 g	PAG	ISO 46	175 cc	699935
ROVER-MG							
25. MG ZR. CDV. EXPRESS LHD	1999-2005	R134a	640 g ±25	PAG	ISO 46	135 cc	699935
25. MG ZR. CDV. EXPRESS RHD	1999-2005	R134a	560 g ±25	PAG	ISO 46	135 cc	699935
45 MG ZS LHD	1999-2005	R134a	640 g ±25	PAG	ISO 46	135 cc	699935
45 MG ZS RHD	1999-2005	R134a	560 g ±25	PAG	ISO 46	135 cc	699935
75. MG ZT. ZT-T	1999-2005	R134a	450 g ±50	PAG	ISO 46	120 cc ±10	699935
200 SERIES	1994-1995	R134a	710 g	PAG	ISO 46	127 cc ±7	699935
200 SERIES LHD	1995-1999	R134a	638 g ±27	PAG	ISO 46	135 cc	699935
200 SERIES RHD	1995-1999	R134a	560 g ±25	PAG	ISO 46	135 cc	699935
200 SERIES. COUPE. CABRIO LHD	1995-1999	R134a	638 g ±27	PAG	ISO 46	135 cc	699935
200 SERIES. COUPE. CABRIO RHD	1995-1999	R134a	560 g ±25	PAG	ISO 46	135 cc	699935
200. 400 SERIES	1989-1994	R12>R134a*	964 g	MIN	ISO 100	122 cc ±7	699936
213. 216	1984-1989	R12>R134a*	1300 g	MIN	ISO 100	140 cc	699936
400 SERIES	1994-1995	R134a	710 g	PAG	ISO 46	127 cc ±7	699935
400 SERIES. TOURER LHD	1995-1999	R134a	638 g ±27	PAG	ISO 46	135 cc	699935
400 SERIES. TOURER RHD	1995-1999	R134a	560 g ±25	PAG	ISO 46	135 cc	699935
600 SERIES	1993-1999	R134a	725 g ±25	PAG	ISO 46	160 cc	699935
800	1986-1991	R12>R134a*	1020 g	MIN	ISO 100	153 cc	699936
820	1991-1994	R12>R134a*	1020 g	MIN	ISO 100	177 cc	699936

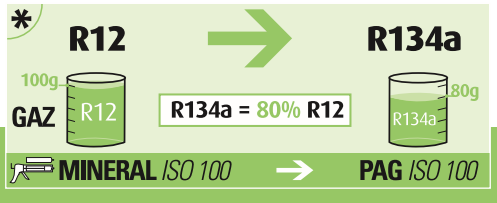

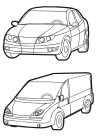

		GAZ				Valeo
ROVER-MG (.../...)						
820	1994-1999	R134a	650 g ±50	PAG	ISO 46	155 cc	**699935**
825	1996-1999	R134a	650 g ±50	PAG	ISO 46	100 cc ±20	**699935**
827	1991-1994	R12>R134a*	1020 g	MIN	ISO 100	153 cc	**699936**
827	1994-1996	R134a	650 g ±50	PAG	ISO 46	100 cc	**699935**
825 2.5 D TURBO	1992-1994	R12>R134a*	1020 g	MIN	ISO 100	177 cc	**699936**
825 2.5 D TURBO	1994-1996	R134a	650 g ±50	PAG	ISO 46	155 cc	**699935**
MGF. TF AT	1995-2005	R134a	720 g ±10	PAG	ISO 100	170 cc	**699936**
MGF. TF MT	1995-2005	R134a	625 g ±5	PAG	ISO 100	170 cc	**699936**
SAAB						
90 Sankyo/Seiko	1984-1993	R12>R134a*	975 g ±25	MIN	ISO 100	172 cc ±2	**699936**
90 Clarion	1984-1993	R12>R134a*	1050 g	MIN	ISO 100	120 cc	**699936**
900 Sankyo/Seiko	1984-1993	R12>R134a*	975 g ±25	MIN	ISO 100	172 cc ±2	**699936**
900 Clarion	1984-1993	R12>R134a*	1050 g	MIN	ISO 100	120 cc	**699936**
900	1993-1996	R134a	725 g	PAG	ISO 100	200 cc	**699936**
900	1997-1998	R134a	725 g	PAG	ISO 46	150 cc	**699935**
9000	1987-1993	R12>R134a*	1100 g	MIN	ISO 100	135 cc	**699936**
9000 With rear AC	1987-1993	R12>R134a*	1350 g	MIN	ISO 100	135 cc	**699936**
9000 Seiko-Seiki	1992-1998	R134a	950 g	PAG	ISO 100	200 cc	**699936**
9000 Sanden	1992-1998	R134a	950 g	PAG	ISO 46	200 cc	**699935**
9-3 DIESEL	1998-2002	R134a	800 g	PAG	ISO 100	295 cc	**699936**
9-3 DIESEL	2002-	R134a	680 g	PAG	ISO 46	170 cc ±65	**699935**
9-3. 9-3 CABRIO	1998-2002	R134a	800 g	PAG	ISO 46	150 cc	**699935**
9-3. 9-3 CABRIO	2002-	R134a	680 g	PAG	ISO 46	170 cc ±65	**699935**
9-3X	2009-	R134a	680 g	PAG	ISO 46	135 cc	**699935**
9-5	1997-2006	R134a	875 g	PAG	ISO 46	145 cc	**699935**
9-5 DIESEL	2002-2006	R134a	875 g	PAG	ISO 46	145 cc	**699935**
9-5 GAS	2005-2010	R134a	825 g	PAG	ISO 46	145 cc	**699935**
9-5 DIESEL	2005-2010	R134a	825 g	PAG	ISO 46	120 cc	**699935**
9-5	2010-	R134a	600 g	PAG	ISO 46	110 cc	**699935**
SCANIA						
93 H. M	1988-1996	R134a	800 g	PAG	ISO 46	175 cc	**699935**
94 C. D. G. L	1996-	R134a	1450 g	PAG	ISO 46	240 cc	**699935**
113 E. H. M	1991-1996	R134a	800 g	PAG	ISO 46	115 cc	**699935**
114 C. G. L	1998-	R134a	1450 g	PAG	ISO 46	240 cc	**699935**
124 C. G. L	1996-	R134a	1450 g	PAG	ISO 46	240 cc	**699935**
143 E. H	1991-1996	R134a	800 g	PAG	ISO 46	175 cc	**699935**
143 E. H. M	1991-1996	R134a	800 g	PAG	ISO 46	175 cc	**699935**
144 C. G. L	1995-	R134a	1450 g	PAG	ISO 46	240 cc	**699935**
164 C. G. L	2000-	R134a	1450 g	PAG	ISO 46	240 cc	**699935**
R	2004-	R134a	1250 g	PAG	ISO 46	240 cc	**699935**
T 93 H	1990-1996	R134a	800 g	PAG	ISO 46	175 cc	**699935**
T 94 C. G. L	1996-	R134a	1450 g	PAG	ISO 46	240 cc	**699935**
T 113 E. H	1990-1996	R134a	800 g	PAG	ISO 46	175 cc	**699935**
T 114 C. G. L	1998-	R134a	1450 g	PAG	ISO 46	240 cc	**699935**

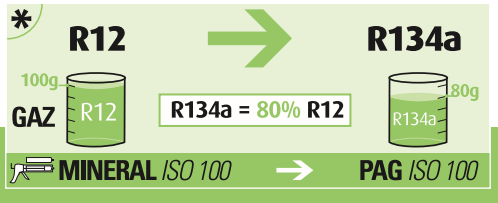

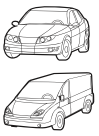

GAZ

Valeo

		GAZ				Valeo
SCANIA (.../...)						
T 124 C. G. L	1996-	R134a	1450 g	PAG	ISO 46	240 cc	**699935**
TL 44C. G. L	1995-	R134a	1450 g	PAG	ISO 46	240 cc	**699935**
SEAT						
ALHAMBRA	1996-2000	R134a	975 g ±25	PAG	ISO 46	135 cc	**699935**
ALHAMBRA With rear AC	1996-2000	R134a	1375 g ±25	PAG	ISO 46	240 cc	**699935**
ALHAMBRA II	2000-2010	R134a	725 g ±25	PAG	ISO 46	135 cc	**699935**
ALHAMBRA II With rear AC	2000-2010	R134a	1075 g ±25	PAG	ISO 46	240 cc	**699935**
ALHAMBRA Denso	2010-	R134a	600 g ±25	PAG	ISO 46	110 cc ±10	**699935**
ALHAMBRA Sanden	2010-	R134a	600 g ±25	PAG	ISO 46	140 cc ±10	**699935**
ALHAMBRA with rear AC, Denso	2010-	R134a	1000 g ±25	PAG	ISO 46	210 cc ±10	**699935**
ALHAMBRA with rear AC, Sanden	2010-	R134a	1000 g ±25	PAG	ISO 46	240 cc ±10	**699935**
ALTEA Denso	2004-2008	R134a	525 g ±25	PAG	ISO 46	140 cc ±10	**699935**
ALTEA Sanden	2004-2008	R134a	525 g ±25	PAG	ISO 46	110 cc ±10	**699935**
ALTEA Zexel	2004-2008	R134a	525 g ±25	PAG	ISO 46	120 cc ±10	**699935**
ALTEA XL Denso	2006-	R134a	525 g ±25	PAG	ISO 46	140 cc ±10	**699935**
ALTEA XL Sanden	2006-	R134a	525 g ±25	PAG	ISO 46	110 cc ±10	**699935**
ALTEA XL Zexel	2006-	R134a	525 g ±25	PAG	ISO 46	110 cc ±10	**699935**
AROSA	1997-2000	R134a	725 g ±25	PAG	ISO 46	100 cc	**699935**
AROSA	2000-2004	R134a	725 g ±25	PAG	ISO 46	120 cc	**699935**
CORDOBA	1999-2002	R134a	775 g ±25	PAG	ISO 46	135 cc	**699935**
CORDOBA	2002-2008	R134a	550 g ±25	PAG	ISO 46	140 cc	**699935**
CORDOBA LHD	1993-1999	R134a	865 g ±15	PAG	ISO 46	115 cc	**699935**
CORDOBA RHD	1993-1999	R134a	915 g ±15	PAG	ISO 46	115 cc	**699935**
EXEO Denso 7SEU17C	2008-	R134a	500 g ±15	PAG	ISO 46	120 cc ±10	**699935**
EXEO Zexel	2008-	R134a	500 g ±15	PAG	ISO 46	120 cc ±10	**699935**
EXEO Sanden	2008-	R134a	500 g ±15	PAG	ISO 46	120 cc ±10	**699935**
EXEO Denso 6SEU14	2008-	R134a	500 g ±15	PAG	ISO 46	90 cc ±10	**699935**
IBIZA	1985-1993	R12>R134a*	1050 g ±25	MIN	ISO 100	130 cc ±10	**699936**
IBIZA	1999-2002	R134a	775 g ±25	PAG	ISO 46	135 cc	**699935**
IBIZA	2002-2008	R134a	550 g ±25	PAG	ISO 46	140 cc	**699935**
IBIZA LHD	1993-1999	R134a	865 g ±15	PAG	ISO 46	115 cc	**699935**
IBIZA RHD	1993-1999	R134a	915 g ±15	PAG	ISO 46	115 cc	**699935**
IBIZA Denso	2008-	R134a	500 g ±15	PAG	ISO 46	90 cc ±10	**699935**
IBIZA Delphi	2008-	R134a	500 g ±15	PAG	ISO 46	110 cc ±10	**699935**
INCA LHD	1995-2004	R134a	865 g ±15	PAG	ISO 46	122 cc ±7	**699935**
INCA RHD	1995-2004	R134a	915 g ±15	PAG	ISO 46	122 cc ±7	**699935**
LEON	1999-2005	R134a	775 g ±25	PAG	ISO 46	135 cc ±15	**699935**
LEON II Denso	2004-	R134a	525 g ±25	PAG	ISO 46	140 cc ±10	**699935**
LEON II Sanden	2004-	R134a	525 g ±25	PAG	ISO 46	110 cc ±10	**699935**
LEON II Zexel	2004-	R134a	525 g ±25	PAG	ISO 46	120 cc ±10	**699935**
MALAGA	1985-1993	R12>R134a*	1050 g ±25	MIN	ISO 100	130 cc ±10	**699936**
TOLEDO	1991-1993	R12>R134a*	940 g ±40	MIN	ISO 100	142 cc ±7	**699936**
TOLEDO II	1999-2005	R134a	775 g ±25	PAG	ISO 46	135 cc ±15	**699935**
TOLEDO III Denso	2004-	R134a	525 g ±25	PAG	ISO 46	140 cc ±10	**699935**

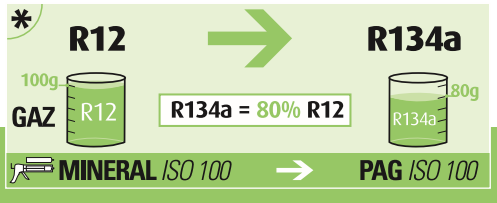

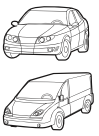

		GAZ				
SEAT (.../...)						
TOLEDO III Sanden	2004-	R134a	525 g ±25	PAG	ISO 46	110 cc ±10	**699935**
TOLEDO III Zexel	2004-	R134a	525 g ±25	PAG	ISO 46	120 cc ±10	**699935**
TOLEDO LHD	1993-1999	R134a	850 g ±30	PAG	ISO 46	122 cc ±7	**699935**
TOLEDO RHD	1993-1999	R134a	900 g ±30	PAG	ISO 46	122 cc ±7	**699935**
SKODA						
FABIA	1999-2007	R134a	550 g ±25	PAG	ISO 46	140 cc ±10	**699935**
FABIA Denso	2007-	R134a	500 g ±15	PAG	ISO 46	90 cc ±10	**699935**
FABIA Delphi	2007-	R134a	500 g ±15	PAG	ISO 46	110 cc ±10	**699935**
FELICIA 1.3	1996-2001	R134a	765 g ±15	PAG	ISO 100	135 cc	**699936**
FELICIA 1.6	1996-2001	R134a	735 g ±15	PAG	ISO 46	100 cc	**699935**
OCTAVIA	1996-2004	R134a	775 g ±25	PAG	ISO 46	135 cc ±15	**699935**
OCTAVIA II Denso	2004-	R134a	550 g ±25	PAG	ISO 46	180 cc ±10	**699935**
OCTAVIA II Zexel	2004-	R134a	550 g ±25	PAG	ISO 46	120 cc ±10	**699935**
OCTAVIA II Sanden	2004-	R134a	550 g ±25	PAG	ISO 46	110 cc ±10	**699935**
ROOMSTER	2006-	R134a	550 g ±25	PAG	ISO 46	140 cc ±10	**699935**
SUPERB	2002-2008	R134a	600 g ±25	PAG	ISO 46	250 cc	**699935**
SUPERB Denso	2008-	R134a	525 g ±25	PAG	ISO 46	140 cc ±10	**699935**
SUPERB Sanden	2008-	R134a	525 g ±25	PAG	ISO 46	110 cc ±10	**699935**
YETI Denso 1K0820859S	2009-	R134a	525 g ±25	PAG	ISO 46	140 cc ±10	**699935**
YETI Denso 1K0820859T	2009-	R134a	525 g ±25	PAG	ISO 46	90 cc ±10	**699935**
YETI Sanden	2009-	R134a	525 g ±25	PAG	ISO 46	110 cc ±10	**699935**
SMART						
CITY COUPE / FORTWO	1998-2003	R134a	620 g	PAG	ISO 46	180 cc	**699935**
CITY COUPE / FORTWO (450)	2003-2007	R134a	450 g	PAG	ISO 46	180 cc	**699935**
FORTWO (451)	2007-	R134a	420 g	PAG	ISO 46	180 cc	**699935**
FORFOUR (454)	2004-2006	R134a	450 g	PAG	ISO 46	150 cc	**699935**
ROADSTER / COUPE / BRABUS (452)	2003-2006	R134a	648 g	PAG	ISO 46	180 cc	**699935**
ROADSTER / CROSSBLADE	1998-2003	R134a	620 g	PAG	ISO 46	180 cc	**699935**
SSANGYONG						
ACTYON	2005-	R134a	650 g	PAG	ISO 100	(1) cc	**699936**
KORANDO	1997-1999	R134a	700 g ±50	PAG	ISO 100	200 cc	**699936**
KORANDO	1999-2003	R134a	700 g ±50	PAG	ISO 100	(1) cc	**699936**
KYRON	2005-2008	R134a	650 g ±50	PAG	ISO 100	265 cc	**699936**
MUSSO	1996-1999	R134a	700 g ±50	PAG	ISO 100	200 cc	**699936**
MUSSO	1999-2003	R134a	700 g ±50	PAG	ISO 100	(1) cc	**699936**
REXTON	2002-	R134a	850 g ±50	PAG	ISO 125	265 cc	**699937**
REXTON With rear AC	2002-	R134a	1200 g ±50	PAG	ISO 125	265 cc	**699937**
RODIUS	2005-	R134a	1050 g ±30	PAG	ISO 100	(1) cc	**699936**
SUBARU						
FORESTER LHD	1997-2002	R134a	600 g ±50	PAG	ISO 100	(1) cc	**699936**
FORESTER RHD	1997-2002	R134a	700 g ±50	PAG	ISO 100	(1) cc	**699936**
FORESTER	2002-2008	R134a	600 g ±50	PAG	ISO 100	145 cc ±15	**699936**
FORESTER	2008-	R134a	500 g	PAG	ISO 100	(1) cc	**699936**
IMPREZA	1993-	R12>R134a*	700 g ±50	MIN	ISO 100	(1) cc	**699936**

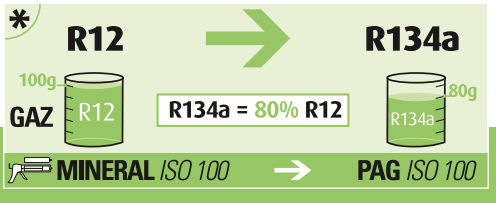

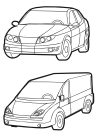

GAZ

Valeo

		GAZ					Valeo
SUBARU (.../...)							
IMPREZA	1994-1996	R134a	650 g ±50	PAG	ISO 100	(1) cc	699936
IMPREZA	2000-2007	R134a	500 g ±50	PAG	ISO 100	(1) cc	699936
IMPREZA	2008-	R134a	500 g	PAG	ISO 100	(1) cc	699936
IMPREZA LHD	1997-2000	R134a	600 g ±50	PAG	ISO 100	(1) cc	699936
IMPREZA RHD	1997-2000	R134a	600 g ±50	PAG	ISO 100	(1) cc	699936
JUSTY	2003-2006	R134a	430 g	PAG	ISO 46	90 cc	699935
JUSTY	2007-	R134a	300 g	PAG	ISO 46	(1) cc	699935
LEGACY	1994-1995	R134a	650 g ±50	PAG	ISO 46	(1) cc	699935
LEGACY LHD	1996-1999	R134a	650 g ±50	PAG	ISO 100	(1) cc	699936
LEGACY LHD	1997-1999	R134a	600 g ±50	PAG	ISO 100	(1) cc	699936
LEGACY LHD	2000-2003	R134a	650 g ±50	PAG	ISO 100	(1) cc	699936
LEGACY RHD	1996-1999	R134a	750 g ±50	PAG	ISO 100	(1) cc	699936
LEGACY RHD	1997-1999	R134a	810 g ±20	PAG	ISO 100	(1) cc	699936
LEGACY RHD	2000-2003	R134a	450 g ±50	PAG	ISO 100	(1) cc	699936
LEGACY	2003-2009	R134a	430 g	PAG	ISO 46	70 cc	699935
LEGACY	2009-	R134a	425 g	PAG	ISO 46	(1) cc	699935
OUTBACK	2003-2009	R134a	430 g ±30	PAG	ISO 46	(1) cc	699935
OUTBACK	2009-	R134a	425 g ±25	PAG	ISO 46	(1) cc	699935
SVX	1994-1997	R134a	650 g	PAG	ISO 46	150 cc	699935
TRIBECA	2005-2008	R134a	600 g	PAG	ISO 46	(1) cc	699935
SUZUKI							
ALTO 1.0	1997-2002	R134a	550 g ±50	PAG	(1)	80 cc ±20	
ALTO 1.1	2002-2006	R134a	400 g ±50	PAG	ISO 46	107 cc ±7	699935
BALENO	1995-2002	R134a	600 g	PAG	(1)	150 cc	
CAPUCCINO	1993-1996	R134a	600 g	PAG	(1)	150 cc	
GRAND VITARA	1998-2006	R134a	550 g ±50	PAG	ISO 46	(1) cc	699935
IGNIS	2000-2008	R134a	360 g ±30	PAG	(1)	120 cc	
JIMNY	1998-	R134a	550 g ±50	PAG	(1)	(1) cc	
KIZASHI	2010-	R134a	530 g ±30	PAG	ISO 46	150 cc ±10	699935
LIANA	2001-2007	R134a	500 g ±30	PAG	ISO 46	100 cc	699935
SPLASH	2008-	R134a	370 g ±20	PAG	ISO 46	145 cc ±10	699935
SWIFT	1985-1991	R12>R134a*	700 g	MIN	ISO 100	80 cc ±20	699936
SWIFT 1,3L D	2005-	R134a	370 g ±20	PAG	ISO 46	100 cc	699935
SWIFT 1,3I 1,5I 1,6I	2005-	R134a	370 g ±20	PAG	ISO 46	60 cc	699935
SWIFT	2010-	R134a	370 g ±20	PAG	ISO 46	120 cc ±15	699935
SX4	2006-	R134a	430 g ±20	PAG	ISO 46	80 cc ±15	699935
WAGON R	1997-2000	R134a	550 g ±50	PAG	ISO 46	(1) cc	699935
WAGON R	2000-2003	R134a	475 g ±25	PAG	ISO 46	120 cc	699935
WAGON R	2003-2005	R134a	500 g ±10	PAG	ISO 46	150 cc ±10	699935
TOYOTA							
4 RUNNER LHD	1993-1996	R134a	750 g ±50	PAG	ISO 46	(1) cc	699935
4 RUNNER RHD	1993-1996	R134a	700 g ±50	PAG	ISO 46	(1) cc	699935
AURIS	2007-	R134a	450 g	PAG	ISO 46	(1) cc	699935
AVENSIS	1997-2000	R134a	450 g ±50	PAG	ISO 46	(1) cc	699935

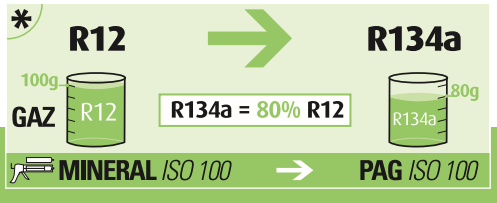

		GAZ					Valeo
TOYOTA (.../...)							
AVENSIS	2000-2003	R134a	460 g ±20	PAG	ISO 46	(1) cc	**699935**
AVENSIS	2003-2009	R134a	440 g ±30	PAG	ISO 46	(1) cc	**699935**
AVENSIS 2.0D ENG. / MOT. 1CD-FTV	2003-2009	R134a	(1) g	PAG	ISO 46	(1) cc	**699935**
AVENSIS	2009-	R134a	440g g	PAG	ISO 46	(1) cc	**699935**
AVENSIS VERSO	2001-2006	R134a	500 g ±30	PAG	ISO 46	(1) cc	**699935**
AVENSIS VERSO With rear AC	2001-2006	R134a	800 g ±30	PAG	ISO 46	(1) cc	**699935**
AYGO	2005-	R134a	450 g ±25	PAG	ISO 100	80 cc	**699936**
AYGO DIESEL	2005-	R134a	500 g ±25	PAG	ISO 100	80 cc	**699936**
CAMRY	1986-1991	R12>R134a*	675 g ±75	MIN	ISO 100	(1) cc	**699936**
CAMRY	1991-1993	R12>R134a*	950 g ±50	MIN	ISO 100	(1) cc	**699936**
CAMRY	1994-1996	R134a	950 g ±50	PAG	ISO 46	(1) cc	**699935**
CAMRY	1996-2001	R134a	800 g ±50	PAG	ISO 46	(1) cc	**699935**
CAMRY LHD	2001-2005	R134a	550 g ±50	PAG	ISO 46	(1) cc	**699935**
CAMRY RHD	2001-2005	R134a	580 g ±50	PAG	ISO 46	(1) cc	**699935**
CARINA	1988-1993	R12>R134a*	700 g ±50	MIN	ISO 100	(1) cc	**699936**
CARINA E	1992-1997	R134a	750 g ±50	PAG	ISO 46	(1) cc	**699935**
CELICA	1986-1989	R12>R134a*	800 g ±50	MIN	ISO 100	(1) cc	**699936**
CELICA (ST18)	1990-1994	R12>R134a*	750 g ±50	MIN	ISO 100	(1) cc	**699936**
CELICA (ST200)	1994-1999	R134a	650 g ±50	PAG	ISO 46	(1) cc	**699935**
CELICA (ST230)	1999-2005	R134a	430 g ±30	PAG	ISO 46	120 cc	**699935**
COROLLA (E10)	1993-1994	R12>R134a*	750 g ±50	MIN	ISO 100	(1) cc	**699936**
COROLLA (E10)	1994-1997	R134a	700 g ±50	PAG	ISO 100	(1) cc	**699936**
COROLLA (E11)	1997-2002	R134a	650 g ±50	PAG	ISO 100	(1) cc	**699936**
COROLLA (E11) 1.9D Japanese built	2000-2002	R134a	650 g ±50	PAG	ISO 100	(1) cc	**699936**
COROLLA (E11) 1.9D UK built	2000-2002	R134a	470 g ±20	PAG	ISO 100	(1) cc	**699936**
COROLLA (E12)	2002-2007	R134a	490 g ±30	PAG	ISO 46	(1) cc	**699935**
COROLLA (E14/E15)	2007-	R134a	440 g	PAG	ISO 46	(1) cc	**699935**
COROLLA (E9)	1987-1992	R12>R134a*	675 g ±75	MIN	ISO 100	(1) cc	**699936**
COROLLA (E9) 4X4	1988-1991	R12>R134a*	650 g ±50	MIN	ISO 100	(1) cc	**699936**
COROLLA (E9) DIESEL	1987-1992	R12>R134a*	700 g ±50	MIN	ISO 100	(1) cc	**699936**
COROLLA VERSO	2002-2004	R134a	530 g ±30	PAG	ISO 46	(1) cc	**699935**
COROLLA VERSO	2004-	R134a	440 g ±30	PAG	ISO 46	(1) cc	**699935**
DYNA	1988-1994	R12>R134a*	700 g ±50	MIN	ISO 100	(1) cc	**699936**
HI-ACE	1989-1995	R12>R134a*	850 g	MIN	ISO 100	(1) cc	**699936**
HI-ACE With rear AC	1989-1995	R12>R134a*	1400 g	MIN	ISO 100	(1) cc	**699936**
HI-LUX	1989-1993	R12>R134a*	750 g ±50	MIN	ISO 100	(1) cc	**699936**
HI-LUX	1993-1996	R134a	750 g ±50	PAG	ISO 46	(1) cc	**699935**
HI-LUX	1997-2002	R134a	550 g ±50	PAG	ISO 46	(1) cc	**699935**
HI-LUX	2001-2005	R134a	550 g ±50	PAG	ISO 46	110 cc	**699935**
HILUX	2005-	R134a	450g g	PAG	ISO 46	(1) cc	**699935**
IQ	2009-	R134a	370g g	PAG	ISO 46	(1) cc	**699935**
LANDCRUISER / PRADO With rear AC	1997-2002	R134a	950 g ±50	PAG	ISO 46	(1) cc	**699935**
LANDCRUISER / PRADO	2002-2007	R134a	600 g ±30	PAG	ISO 46	(1) cc	**699935**
LANDCRUISER / PRADO With rear AC	2002-2007	R134a	800 g ±30	PAG	ISO 46	(1) cc	**699935**

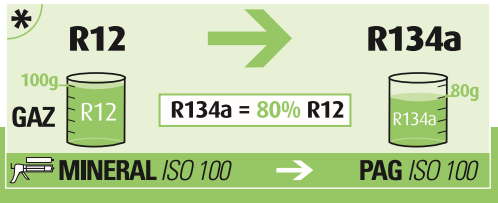

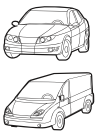

GAZ

Valeo

		GAZ				Valeo
TOYOTA (.../...)						
LANDCRUISER (16mm)	2007-	R134a	770 g ±30	PAG	ISO 46	135 cc ±15	**699935**
LANDCRUISER (16mm) with rear AC	2007-	R134a	920 g ±30	PAG	ISO 46	135 cc ±15	**699935**
LANDCRUISER (16mm) with rear AC and fridge box	2007-	R134a	970 g ±30	PAG	ISO 46	135 cc ±15	**699935**
LANDCRUISER (22mm)	2007-	R134a	870 g ±30	PAG	ISO 46	135 cc ±15	**699935**
LANDCRUISER (22mm) with rear AC	2007-	R134a	960 g ±30	PAG	ISO 46	135 cc ±15	**699935**
LANDCRUISER (22mm) with rear AC and fridge box	2007-	R134a	1010 g ±30	PAG	ISO 46	135 cc ±15	**699935**
LANDCRUISER 3.0 TURBO D	1993-1996	R134a	875 g ±25	PAG	ISO 46	(1) cc	**699935**
LANDCRUISER 3.0 TURBO D With rear AC	1993-1996	R134a	1600 g ±50	PAG	ISO 46	(1) cc	**699935**
LANDCRUISER 3.4	1996-2002	R134a	700 g ±50	PAG	ISO 46	(1) cc	**699935**
LANDCRUISER 3.4 With rear AC	1996-2002	R134a	950 g ±50	PAG	ISO 46	(1) cc	**699935**
LANDCRUISER 4.5	1995-1998	R134a	(1) g	PAG	ISO 46	(1) cc	**699935**
LANDCRUISER AMAZON 4.2 TURBO D	1990-1994	R12>R134a*	900 g ±50	MIN	ISO 100	(1) cc	**699936**
LANDCRUISER AMAZON 4.2 TURBO D With rear AC	1990-1994	R12>R134a*	1350 g ±50	MIN	ISO 100	(1) cc	**699936**
LANDCRUISER AMAZON 4.2 TURBO D	1995-1998	R134a	850 g ±50	PAG	ISO 46	(1) cc	**699935**
LANDCRUISER AMAZON 4.2 TURBO D. 4.7	1998-	R134a	(1) g	PAG	ISO 46	(1) cc	**699935**
LANDCRUISER COLORADO / PRADO	1997-2002	R134a	700 g ±50	PAG	ISO 46	(1) cc	**699935**
LANDCRUISER DIESEL	1985-1990	R12>R134a*	700 g ±50	MIN	ISO 100	(1) cc	**699936**
LANDCRUISER DIESEL With rear AC	1985-1990	R12>R134a*	1400 g ±50	MIN	ISO 100	(1) cc	**699936**
LANDCRUISER DIESEL	1990-1995	R12>R134a*	900 g ±50	MIN	ISO 100	(1) cc	**699936**
LANDCRUISER DIESEL With rear AC	1990-1995	R12>R134a*	1600 g ±50	MIN	ISO 100	(1) cc	**699936**
LITE-ACE	1985-1992	R12>R134a*	700 g ±50	MIN	ISO 100	(1) cc	**699936**
LITE-ACE With rear AC	1985-1992	R12>R134a*	1400 g ±50	MIN	ISO 100	(1) cc	**699936**
LITE-ACE	1992-1995	R12>R134a*	675 g ±75	MIN	ISO 100	(1) cc	**699936**
LITE-ACE With rear AC	1992-1995	R12>R134a*	1300 g ±50	MIN	ISO 100	(1) cc	**699936**
MR2	1985-1990	R12>R134a*	800 g ±50	MIN	ISO 100	(1) cc	**699936**
MR2	1993-1999	R134a	850 g ±50	PAG	ISO 46	(1) cc	**699935**
MR2	1999-2005	R134a	500 g ±30	PAG	ISO 46	120 cc	**699935**
PASEO	1996-1999	R134a	600 g ±50	PAG	ISO 100	(1) cc	**699936**
PICNIC	1996-2001	R134a	750 g ±50	PAG	ISO 46	(1) cc	**699935**
PREVIA (ACR)	2000-2006	R134a	700 g ±30	PAG	ISO 46	(1) cc	**699935**
PREVIA (ACR) With rear AC	2000-2006	R134a	880 g ±30	PAG	ISO 46	(1) cc	**699935**
PREVIA (TCR)	1990-1993	R12>R134a*	950 g ±50	MIN	ISO 100	(1) cc	**699936**
PREVIA (TCR) With rear AC	1990-07.1993	R12>R134a*	1400 g	MIN	ISO 100	(1) cc	**699936**
PREVIA (TCR)	08.1993-2000	R134a	900 g ±50	PAG	ISO 46	(1) cc	**699935**
PREVIA (TCR) With rear AC	08.1993-2000	R134a	1150 g ±50	PAG	ISO 46	(1) cc	**699935**
PRIUS	2003-2009	R134a	470 g	PAG	ISO 46	(1) cc	**699935**
PRIUS	2009-	R134a	700 g ±50	PAG	ISO 46	(1) cc	**699935**
RAV4	1994-2000	R134a	700 g ±50	PAG	ISO 46	(1) cc	**699935**
RAV4	2000-2006	R134a	510 g ±30	PAG	ISO 46	120 cc	**699935**
RAV4	2006-	R134a	430 g ±30	PAG	ISO 46	130 cc	**699935**
STARLET	1985-1993	R12>R134a*	700 g ±50	MIN	ISO 100	(1) cc	**699936**
STARLET	1994-1996	R134a	(1) g	PAG	ISO 46	(1) cc	**699935**
STARLET	1996-1999	R134a	600 g ±50	PAG	ISO 46	(1) cc	**699935**
SUPRA	1986-1993	R12>R134a*	800 g ±50	MIN	ISO 100	(1) cc	**699936**

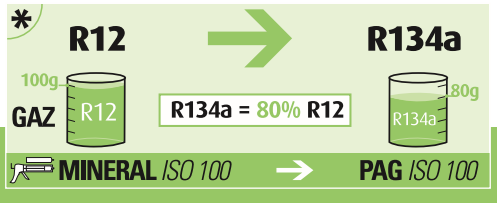

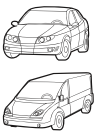

		GAZ				
TOYOTA (.../...)						
SUPRA	1993-1997	R134a	700 g ±50	PAG	ISO 46	(1) cc	699935
VERSO	2009-	R134a	440 g	PAG	ISO 46	(1) cc	699935
YARIS	1999-2006	R134a	430 g ±30	PAG	ISO 46	(1) cc	699935
YARIS VERSO	2000-2005	R134a	410 g ±30	PAG	ISO 46	(1) cc	699935
YARIS VERSO 1.4D	2000-2005	R134a	440 g ±30	PAG	ISO 46	(1) cc	699935
YARIS	2005-2010	R134a	370 g	PAG	ISO 46	(1) cc	699935
YARIS	2010-	R134a	360 g ±30	PAG	ISO 46	(1) cc	699935
VAUXHALL						
AGILA	2000-2007	R134a	500 g	PAG	ISO 125	150 cc ±10	699937
AGILA 1,0L. 1,2L.	2007-	R134a	370 g	PAG	ISO 46	90 cc	699935
AGILA 1,3L. CDTI	2007-	R134a	370 g	PAG	ISO 46	120 cc	699935
ANTARA 2,0L. D	2006-	R134a	520 g	PAG	ISO 46	150 cc	699935
ANTARA 2,4I 3,2I	2006-	R134a	660 g	PAG	ISO 46	150 cc	699935
ASTRA / BELMONT / KADETT E	1984-1991	R12>R134a*	1000 g	MIN	ISO 100	(1) cc	699936
ASTRA F	1991-1994	R134a	700 g	PAG	ISO 125	295 cc	699937
ASTRA F	1994-1998	R134a	800 g	PAG	ISO 125	155 cc	699937
ASTRA G	1998-2002	R134a	700 g	PAG	ISO 46	120 cc	699935
ASTRA G	2002-2006	R134a	600 g	PAG	ISO 46	150 cc	699935
ASTRA G 1.7. 2.0. 2.2 DIESEL / 1.6. 2.2	2002-2006	R134a	600 g	PAG	ISO 46	120 cc	699935
ASTRA G 2.0 TURBO ENG. / MOT. Z20LET	2002-2006	R134a	700 g	PAG	ISO 46	150 cc	699935
ASTRA H 1.3 DIESEL / 1.4. 1.6. 1.8	2004-2009	R134a	475 g	PAG	ISO 46	150 cc	699935
ASTRA H 1.7 DIESEL	2004-2009	R134a	500 g	PAG	ISO 46	120 cc	699935
ASTRA H 1.9 DIESEL	2004-2009	R134a	475 g	PAG	ISO 46	135 cc	699935
ASTRA H 2.0	2004-2009	R134a	500 g	PAG	ISO 46	150 cc	699935
ASTRA J	2009-	R134a	600 g	PAG	ISO 46	125 cc	699935
ASTRA J 1,4L. 1,6L. with automatic gearshift	2009-	R134a	630 g	PAG	ISO 46	125 cc	699935
BRAVA DIESEL	1990-2002	R134a	750 g	PAG	ISO 46	260 cc	699935
CALIBRA	1990-1993	R12>R134a*	1100 g	MIN	ISO 100	240 cc	699936
CALIBRA Old type	1993-1997	R134a	750 g	PAG	ISO 125	295 cc	699937
CALIBRA New type	1994-1997	R134a	1000 g	PAG	ISO 125	295 cc	699937
COMBO II DIESEL	2004-2010	R134a	560 g	PAG	ISO 46	120 cc	699935
COMBO II PETROL	2004-2010	R134a	650 g	PAG	ISO 46	150 cc	699935
CORSA B / COMBO	1993-2000	R134a	900 g	PAG	ISO 46	295 cc	699935
CORSA C	2000-2006	R134a	650 g	PAG	ISO 46	150 cc	699935
CORSA C DI	2000-2003	R134a	650 g	PAG	ISO 46	120 cc	699935
CORSA C DI	2004-2005	R134a	560 g	PAG	ISO 46	120 cc	699935
CORSA C DTI / CDTI	2000-2006	R134a	560 g	PAG	ISO 46	120 cc	699935
FRONTERA	1991-02.1995	R134a	800 g	PAG	(1)	200 cc ±20	
FRONTERA	03.1995-08.1996	R134a	750 g	PAG	(1)	200 cc ±20	
FRONTERA	09.1996-1998	R134a	650 g	PAG	(1)	200 cc ±20	
FRONTERA B	1998-2002	R134a	650 g	PAG	(1)	270 cc ±15	
FRONTERA B	2002-2004	R134a	700 g	PAG	(1)	270 cc ±15	
FRONTERA DIESEL	03.1995-08.1996	R134a	700 g	PAG	(1)	200 cc ±20	
GT	2007-	R134a	470 g	PAG	ISO 46	120 cc	699935

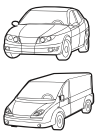

GAZ

Valeo

			GAZ				Valeo
VAUXHALL (.../...)							
INSIGNIA	Sanden	2008-	R134a	600 g	PAG	ISO 46	110 cc	**699935**
INSIGNIA	Delphi	2008-	R134a	600 g	PAG	ISO 46	150 cc	**699935**
MERIVA		2003-2010	R134a	690 g	PAG			
MERIVA		2010-	R134a	580 g	PAG	ISO 46	125 cc	**699935**
MONTEREY		1992-1994	R12>R134a*	850 g	MIN	ISO 100	270 cc	**699936**
MONTEREY		1994-1998	R134a	750 g	PAG	ISO 100	270 cc	**699936**
MONTEREY DIESEL		1994-1998	R134a	750 g	PAG	ISO 46	270 cc	**699935**
MOVANO		1998-2003	R134a	850 g ±50	PAG	ISO 46	135 cc	**699935**
MOVANO	Sanden	2003-2010	R134a	850 g ±35	PAG	ISO 46	135 cc	**699935**
MOVANO	Delphi	2003-2010	R134a	850 g ±35	PAG	ISO 125	220 cc	**699937**
MOVANO		2010-	R134a	600 g	PAG	ISO 46	(1) cc	**699935**
OMEGA A / CARLTON		1986-1994	R12>R134a*	1100 g	MIN	ISO 100	240 cc	**699936**
OMEGA B		1994-1996	R134a	950 g	PAG	ISO 125	250 cc	**699937**
OMEGA B		1996-2003	R134a	950 g	PAG	ISO 125	250 cc	**699937**
OMEGA B 2.0D. 2.2D		1998-2000	R134a	950 g	PAG	ISO 125	295 cc	**699937**
OMEGA B 2.2D		2000-2003	R134a	950 g	PAG	ISO 125	295 cc	**699937**
OMEGA B 2.5D TURBO		1994-2001	R134a	950 g	PAG	ISO 46	155 cc	**699935**
SENATOR		1988-1993	R12>R134a*	1100 g	MIN	ISO 100	240 cc	**699936**
SINTRA		1996-1999	R134a	910 g	PAG	ISO 125	265 cc	**699937**
TIGRA		1995-2000	R134a	900 g	PAG	ISO 46	295 cc	**699935**
TIGRA TWIN TOP		2004-2009	R134a	650 g	PAG	ISO 46	150 cc	**699935**
VECTRA A / CAVALIER III		1988-1993	R12>R134a*	1100 g	MIN	ISO 100	240 cc	**699936**
VECTRA A / CAVALIER III	Old type	1993-1995	R134a	750 g	PAG	ISO 125	295 cc	**699937**
VECTRA A / CAVALIER III	New type	1994-1995	R134a	1000 g	PAG	ISO 125	295 cc	**699937**
VECTRA B		1995-2002	R134a	900 g	PAG	ISO 125	295 cc	**699937**
VECTRA B 1.7D TURBO		1995-1996	R134a	900 g	PAG	ISO 46	155 cc	**699935**
VECTRA B 2.0D TURBO ENG. / MOT. X20DTH		1997-2002	R134a	750 g	PAG	ISO 125	295 cc	**699937**
VECTRA B 2.5. 2.6		1995-2002	R134a	900 g	PAG	ISO 46	120 cc	**699935**
VECTRA C / SIGNUM		2004-2008	R134a	730 g	PAG	ISO 46	120 cc	**699935**
VECTRA C / SIGNUM 1.9 DIESEL		2004-2008	R134a	730 g	PAG	ISO 46	135 cc	**699935**
VECTRA C / SIGNUM 3.0 DIESEL		2004-2008	R134a	680 g	PAG	ISO 46	120 cc	**699935**
VIVARO		2002-2006	R134a	750 g	PAG	ISO 125	220 cc ±15	**699937**
ZAFIRA		1998-2001	R134a	700 g	PAG	ISO 46	120 cc ±10	**699935**
ZAFIRA	With rear AC	1998-2001	R134a	950 g	PAG	ISO 46	240 cc ±10	**699935**
ZAFIRA		2002-2005	R134a	600 g	PAG	ISO 46	120 cc ±10	**699935**
ZAFIRA	With rear AC	2002-2005	R134a	800 g	PAG	ISO 46	240 cc ±10	**699935**
ZAFIRA 2.0 TURBO		2001-2005	R134a	700 g	PAG	ISO 46	120 cc ±10	**699935**
ZAFIRA 2.0 TURBO	With rear AC	2001-2005	R134a	950 g	PAG	ISO 46	240 cc ±10	**699935**
ZAFIRA 2.0 TURBO	With rear AC	2002-2005	R134a	800 g	PAG	ISO 46	240 cc ±10	**699935**
ZAFIRA II 1.6. 1.8. 2.2		2005-2006	R134a	475 g	PAG	ISO 46	120 cc	**699935**
ZAFIRA II 1.6. 1.8. 2.2		2006-	R134a	450 g	PAG	ISO 46	120 cc	**699935**
ZAFIRA II 2.0 TURBO		2005-	R134a	475 g	PAG	ISO 46	150 cc	**699935**
ZAFIRA II DIESEL		2005-	R134a	475 g	PAG	ISO 46	135 cc	**699935**
ZAFIRA III		2011-	R134a	630 g	PAG	ISO 46	125 cc	**699935**

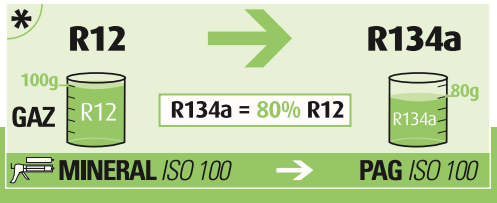

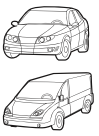

		GAZ					Valeo
VOLKSWAGEN							
AMAROK	2010-	R134a	525 g ±25	PAG	ISO 46	140cc cc	**699935**
CADDY (2004-)	2004-	R134a	525 g ±25	PAG	ISO 46	150 cc	**699935**
CADDY (95-)	1995-2004	R134a	865 g ±15	PAG	ISO 46	115 cc	**699935**
CORRADO	1989-06.1992	R12>R134a*	1125 g ±25	MIN	ISO 100	135 cc	**699936**
CORRADO	07.1992-1995	R134a	875 g ±25	PAG	ISO 46	115 cc	**699935**
CRAFTER with climatic	2006-	R134a	740 g	PAG	ISO 46	190 cc ±10	**699935**
CRAFTER with climatic and roof air condition	2006-	R134a	1125 g	PAG	ISO 46	190 cc ±10	**699935**
EOS Zexel	2006-	R134a	525 g ±25	PAG	ISO 46	120 cc ±15	**699935**
EOS Sanden	2006-	R134a	525 g ±25	PAG	ISO 46	110 cc ±10	**699935**
FOX Denso	2003-	R134a	500 g ±25	PAG	ISO 46	80 cc	**699935**
FOX Delphi	2003-	R134a	450 g ±25	PAG	ISO 46	150 cc	**699935**
GOLF I CABRIOLET Sanden SD508	1983-1993	R12>R134a*	875 g ±25	MIN	ISO 100	175 cc	**699936**
GOLF I CABRIOLET Sanden SD709	1983-1993	R12>R134a*	875 g ±25	MIN	ISO 100	135 cc	**699936**
GOLF I CABRIOLET Sanden SDV710	1983-1993	R12>R134a*	875 g ±25	MIN	ISO 100	120 cc	**699936**
GOLF II / JETTA York	1983-1991	R12>R134a*	875 g ±25	MIN	ISO 100	300 cc	**699936**
GOLF II / JETTA Sanden SD508	1983-1991	R12>R134a*	875 g ±25	MIN	ISO 100	175 cc	**699936**
GOLF II / JETTA Sanden SDV710	1983-1991	R12>R134a*	875 g ±25	MIN	ISO 100	120 cc	**699936**
GOLF II / JETTA Sanden SD709	1983-1991	R12>R134a*	875 g ±25	MIN	ISO 100	135 cc	**699936**
GOLF III / VENTO	1991-06.1992	R12>R134a*	1000 g ±50	MIN	ISO 100	120 cc	**699936**
GOLF III / VENTO / CABRIO Harrison	07.1992-2002	R134a	825 g ±25	PAG	ISO 46	115 cc	**699935**
GOLF III / VENTO / CABRIO Sanden	06.1995-2002	R134a	825 g ±25	PAG	ISO 46	296 cc	**699935**
GOLF IV / BORA Sanden	1997-2005	R134a	775 g ±25	PAG	ISO 46	135 cc ±15	**699935**
GOLF IV / BORA Zexel	1998-2005	R134a	775 g ±25	PAG	ISO 46	115 cc ±20	**699935**
GOLF IV / BORA Denso	2001-2005	R134a	775 g ±25	PAG	ISO 46	140 cc ±10	**699935**
GOLF V / GOLF PLUS Denso	2003-2008	R134a	525 g ±25	PAG	ISO 46	180 cc ±10	**699935**
GOLF V / GOLF PLUS Sanden	2003-2008	R134a	525 g ±25	PAG	ISO 46	110 cc ±10	**699935**
GOLF V / GOLF PLUS Zexel	2003-2008	R134a	525 g ±25	PAG	ISO 46	120 cc ±15	**699935**
GOLF V 2.0. 3.2	2003-2005	R134a	750 g ±50	PAG	ISO 46	115 cc ±20	**699935**
GOLF VI Delphi	2009-	R134a	525 g ±25	PAG	ISO 46	110 cc ±10	**699935**
JETTA (2005-)	2005-	R134a	525 g ±25	PAG	ISO 46	110 cc ±10	**699935**
LT Sanden	1996-2006	R134a	775 g ±25	PAG	ISO 46	135 cc	**699935**
LT Denso	1996-2006	R134a	775 g ±25	PAG	ISO 46	175 cc	**699935**
LUPO Sanden	1998-2000	R134a	725 g ±25	PAG	ISO 46	120 cc ±15	**699935**
LUPO Calsonic	06.1999-2005	R134a	575 g ±25	PAG	ISO 46	150 cc	**699935**
LUPO Denso	11.2000-2005	R134a	575 g ±25	PAG	ISO 46	140 cc	**699935**
NEW BEETLE	1998-2010	R134a	725 g ±25	PAG	ISO 46	135 cc ±15	**699935**
PASSAT (2000-2005)	10.2000-2005	R134a	600 g ±25	PAG	ISO 46	250 cc	**699935**
PASSAT (2000-2005) W8 LHD	2001-2004	R134a	512 g ±12	PAG	ISO 46	200 cc ±10	**699935**
PASSAT (2005-)	2005-2010	R134a	600 g ±25	PAG	ISO 46	110 cc ±10	**699935**
PASSAT (2005-) Zexel	2005-2010	R134a	600 g ±25	PAG	ISO 46	120 cc ±15	**699935**
PASSAT Denso	2010-	R134a	600 g ±25	PAG	ISO 46	90 cc ±10	**699935**
PASSAT Sanden	2010-	R134a	600 g ±25	PAG	ISO 46	110 cc ±10	**699935**
PASSAT (81-88) Sanden SD508	1983-1988	R12>R134a*	875 g ±25	MIN	ISO 100	175 cc	**699936**
PASSAT (81-88) Sanden SDV710	1983-1988	R12>R134a*	875 g ±25	MIN	ISO 100	120 cc	**699936**

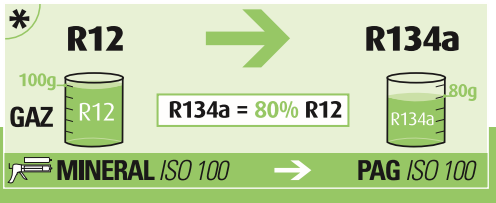

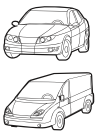

GAZ

Valeo

			GAZ					Valeo
VOLKSWAGEN (.../...)								
PASSAT (81-88)	Sanden SD709	1983-1988	R12>R134a*	875 g ±25	MIN	ISO 100	135 cc	**699936**
PASSAT (88-93)	Sanden SD508	1988-1991	R12>R134a*	875 g ±25	MIN	ISO 100	175 cc	**699936**
PASSAT (88-93)	Sanden SDV710	1988-1991	R12>R134a*	875 g ±25	MIN	ISO 100	120 cc	**699936**
PASSAT (88-93)	Sanden SD709	1988-1991	R12>R134a*	875 g ±25	MIN	ISO 100	135 cc	**699936**
PASSAT (88-93)	York	1988-06.1992	R12>R134a*	1225 g ±25	MIN	ISO 100	300 cc	**699936**
PASSAT (88-93)		07.1992-10.1993	R134a	1175 g ±25	PAG	ISO 46	115 cc	**699935**
PASSAT (93-97)		10.1993-1997	R134a	1175 g ±25	PAG	ISO 46	115 cc	**699935**
PASSAT (96-2000) LHD	Denso	1996-10.2000	R134a	675 g ±25	PAG	ISO 46	250 cc	**699935**
PASSAT (96-2000) LHD	Zexel	1996-10.2000	R134a	675 g ±25	PAG	ISO 46	250 cc	**699935**
PASSAT (96-2000) RHD	Denso	1996-10.2000	R134a	725 g ±25	PAG	ISO 46	250 cc	**699935**
PASSAT (96-2000) RHD	Zexel	1996-10.2000	R134a	725 g ±25	PAG	ISO 46	250 cc	**699935**
PASSAT 2.5 TDI	Zexel	10.2000-2005	R134a	600 g ±25	PAG	ISO 46	250 cc	**699935**
POLO	SD7B10	1994-09.1999	R134a	725 g ±25	PAG	ISO 46	100 cc ±15	**699935**
POLO	Sanden SD6V12	10.1999-2001	R134a	562 g ±12	PAG	ISO 46	120 cc ±15	**699935**
POLO		2002-2006	R134a	562 g ±12	PAG	ISO 46	140 cc	**699935**
POLO	Delphi	2009-	R134a	500 g ±15	PAG	ISO 46	110 cc ±10	**699935**
POLO	Denso	2009-	R134a	500 g ±15	PAG	ISO 46	90 cc ±10	**699935**
POLO CLASSIC		1996-09.1999	R134a	865 g ±15	PAG	ISO 46	115 cc	**699935**
POLO CLASSIC / ESTATE / COMBI		10.1999-2002	R134a	865 g ±15	PAG	ISO 46	135 cc	**699935**
POLO ESTATE / COMBI		1997-09.1999	R134a	865 g ±15	PAG	ISO 46	135 cc ±15	**699935**
SCIROCCO	Sanden SD508	1983-1992	R12>R134a*	875 g ±25	MIN	ISO 100	175 cc	**699936**
SCIROCCO	Sanden SD709	1983-1992	R12>R134a*	875 g ±25	MIN	ISO 100	135 cc	**699936**
SCIROCCO	Sanden SDV710	1983-1992	R12>R134a*	875 g ±25	MIN	ISO 100	120 cc	**699936**
SCIROCCO	York	1983-1992	R12>R134a*	875 g ±25	MIN	ISO 100	300 cc	**699936**
SCIROCCO	Denso	2008-	R134a	525 g ±25	PAG	ISO 46	90 cc ±10	**699935**
SHARAN (95-2000)		1995-2000	R134a	975 g ±25	PAG	ISO 46	135 cc	**699935**
SHARAN (95-2000)	With rear AC	1995-2000	R134a	1375 g ±25	PAG	ISO 46	240 cc	**699935**
SHARAN (2000-)		2000-2010	R134a	725 g ±25	PAG	ISO 46	135 cc	**699935**
SHARAN (2000-)	With rear AC	2000-2010	R134a	1075 g ±25	PAG	ISO 46	240 cc	**699935**
SHARAN	Denso	2010-	R134a	600 g ±25	PAG	ISO 46	140 cc ±10	**699935**
SHARAN	Sanden	2010-	R134a	600 g ±25	PAG	ISO 46	110 cc ±10	**699935**
SHARAN	with rear AC, Denso	2010-	R134a	1000 g ±25	PAG	ISO 46	240 cc ±10	**699935**
SHARAN	with rear AC, Sanden	2010-	R134a	1000 g ±25	PAG	ISO 46	210 cc ±10	**699935**
TIGUAN	Denso	2007-	R134a	660 g	PAG	ISO 46	140 cc ±10	**699935**
TIGUAN	Sanden	2007-	R134a	660 g	PAG	ISO 46	110 cc ±10	**699935**
TIGUAN	Delphi	2007-	R134a	660 g	PAG	ISO 46	110 cc ±10	**699935**
TOUAREG		2003-2010	R134a	725 g ±25	PAG	ISO 46	200 cc ±10	**699935**
TOUAREG	With rear AC	2003-2010	R134a	1075 g ±25	PAG	ISO 46	300 cc	**699935**
TOUAREG		2010-	R134a	850 g	PAG	ISO 46	(1) cc	**699935**
TOUAREG	with rear AC	2010-	R134a	1150 g	PAG	ISO 46	(1) cc	**699935**
TOURAN	Denso	2003-	R134a	525 g ±25	PAG	ISO 46	180 cc ±10	**699935**
TOURAN	Sanden	2003-	R134a	525 g ±25	PAG	ISO 46	110 cc ±10	**699935**
TOURAN	Zexel	2003-	R134a	525 g ±25	PAG	ISO 46	120 cc ±15	**699935**
TRANSPORTER		05.1991-04.1992	R12>R134a*	1100 g ±50	MIN	ISO 100	135 cc	**699936**

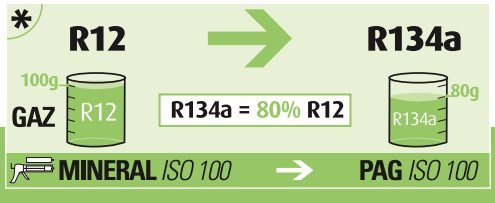

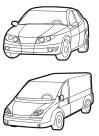

		GAZ					Valeo
VOLKSWAGEN (.../...)							
TRANSPORTER		05.1992-1998	R134a	975 g ±25	PAG	ISO 46	135 cc	**699935**
TRANSPORTER		1999-03.2000	R134a	725 g ±25	PAG	ISO 46	135 cc	**699935**
TRANSPORTER		04.2000-2003	R134a	1125 g ±25	PAG	ISO 46	135 cc	**699935**
TRANSPORTER	Rear engine	1982-1990	R12>R134a*	1325 g ±25	MIN	ISO 100	240 cc	**699936**
TRANSPORTER	Front engine	1990-04.1992	R12>R134a*	1075 g ±25	MIN	ISO 100	135 cc	**699936**
TRANSPORTER	LWB	05.1992-2003	R134a	1025 g ±25	PAG	ISO 46	135 cc	**699935**
TRANSPORTER	With rear AC	05.1992-2003	R134a	1375 g ±25	PAG	ISO 46	240 cc	**699935**
TRANSPORTER	With rear AC	05.1992-06.1997	R134a	1425 g ±25	PAG	ISO 46	240 cc	**699935**
TRANSPORTER	LWB with rear AC	07.1997-2003	R134a	1375 g ±25	PAG	ISO 46	240 cc	**699935**
TRANSPORTER	Denso	2004-	R134a	775 g ±25	PAG	ISO 46	200 cc ±10	**699935**
TRANSPORTER	Sanden	2004-	R134a	975 g ±25	PAG	ISO 46	137 cc ±12	**699935**
TRANSPORTER ENG. / MOT. AHY / AXG	With rear AC	05.1992-2003	R134a	1075 g ±75	PAG	ISO 46	240 cc	**699935**
UP		2012-	R134a	380 g ±10	PAG	ISO 46	120 cc ±10	**699935**
VOLVO							
240		1985-1991	R12>R134a*	1300 g	MIN	ISO 100	200 cc	**699936**
240		1991-1992	R12>R134a*	1100 g	MIN	ISO 100	200 cc	**699936**
240		1993-1994	R134a	750 g	PAG	ISO 100	220 cc	**699936**
850		1991-2000	R134a	787 g ±37	PAG	ISO 46	200 cc	**699935**
240 DIESEL		1979-1989	R12>R134a*	1300 g	MIN	ISO 100	135 cc	**699936**
440 / 460 / 480	Zexel	1988-1993	R12>R134a*	900 g	MIN	ISO 100	200 cc ±20	**699936**
440 / 460 / 480	Sanden	1988-1993	R12>R134a*	900 g	MIN	ISO 100	135 cc	**699936**
440 / 460 / 480	Zexel	1994-1997	R134a	650 g	PAG	ISO 46	200 cc ±20	**699935**
440 / 460 / 480	Sanden	1994-1997	R134a	650 g	PAG	ISO 46	180 cc ±20	**699935**
700 / 900 SERIES	Zexel	1991-	R12>R134a*	1100 g	MIN	ISO 100	200 cc	**699936**
700 / 900 SERIES	Sanden	1991-	R12>R134a*	1100 g	MIN	ISO 100	240 cc	**699936**
700 / 900 SERIES	Zexel	1992-	R12>R134a*	950 g	MIN	ISO 100	200 cc	**699936**
700 / 900 SERIES	Sanden	1992-	R12>R134a*	950 g	MIN	ISO 100	240 cc	**699936**
700 / 900 SERIES 16V / DIESEL	Zexel	1992-	R12>R134a*	1050 g	MIN	ISO 100	200 cc	**699936**
700 / 900 SERIES 16V / DIESEL	Sanden	1992-	R12>R134a*	1050 g	MIN	ISO 100	240 cc	**699936**
700 / 900 SERIES 16V TURBO	Zexel	1991-	R12>R134a*	1000 g	MIN	ISO 100	200 cc	**699936**
700 / 900 SERIES 16V TURBO	Sanden	1991-	R12>R134a*	1000 g	MIN	ISO 100	240 cc	**699936**
900 SERIES ENG. / MOT. 4 CYL.	Seiko	1993-1998	R134a	950 g	PAG	ISO 100	220 cc	**699936**
900 SERIES ENG. / MOT. 4 CYL.	Sanden	1993-1998	R134a	950 g	PAG	ISO 100	240 cc	**699936**
900 SERIES ENG. / MOT. 4 CYL.	Zexel	1993-1998	R134a	950 g	PAG	ISO 46	200 cc	**699935**
900 SERIES ENG. / MOT. 6 CYL.	Seiko	1993-1997	R134a	900 g	PAG	ISO 100	220 cc	**699936**
900 SERIES ENG. / MOT. 6 CYL.	Sanden	1993-1997	R134a	900 g	PAG	ISO 100	240 cc	**699936**
900 SERIES ENG. / MOT. 6 CYL.	Zexel	1993-1997	R134a	900 g	PAG	ISO 46	200 cc	**699935**
960 ENG. / MOT. B6304F		1991-	R12>R134a*	1250 g	MIN	ISO 100	240 cc	**699936**
C30		2007-	R134a	535 g	PAG	ISO 46	200 cc	**699935**
C70		1998-2002	R134a	787 g ±37	PAG	ISO 46	200 cc	**699935**
C70		1998-2005	R134a	787 g ±37	PAG	ISO 46	200 cc	**699935**
S40 / V40		1996-2004	R134a	900 g	PAG	ISO 46	180 cc	**699935**
S40 / V40 1.8 GDI		1998-	R134a	750 g	PAG	ISO 46	130 cc ±10	**699935**
S40 / V40 1.8 GDI		1999-2004	R134a	850 g	PAG	ISO 46	165 cc ±15	**699935**

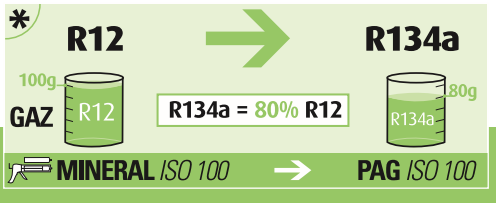

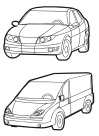

GAZ

Valeo

		GAZ				Valeo
VOLVO (.../...)						
S40 / V40 DIESEL	1996-1998	R134a	900 g	PAG	ISO 46	135 cc	**699935**
S40 / V40 DIESEL	1999-2004	R134a	850 g	PAG	ISO 46	135 cc	**699935**
S40 / V50	2003-	R134a	550 g	PAG	ISO 46	190 cc	**699935**
S60	2000-2010	R134a	1000 g	PAG	ISO 46	180 cc	**699935**
S60 / V60 II	2010-	R134a	820 g	PAG	ISO 46	(1) cc	**699935**
S70 / V70	1996-2000	R134a	787 g ±37	PAG	ISO 46	200 cc	**699935**
S70 / V70	2007-	R134a	800 g	PAG	ISO 46	180 cc	**699935**
S80	1998-2006	R134a	1000 g	PAG	ISO 46	180 cc	**699935**
S80	2006-	R134a	650 g	PAG	ISO 46	180 cc	**699935**
S90 / V90 Zexel	1997-1999	R134a	900 g	PAG	ISO 46	200 cc	**699935**
S90 / V90 Sanden	1997-1999	R134a	900 g	PAG	ISO 100	240 cc	**699936**
V70 / XC70	2000-2007	R134a	1000 g	PAG	ISO 46	180 cc	**699935**
XC60	2008-	R134a	800 g	PAG	ISO 46	180 cc	**699935**
XC70	2007-	R134a	800 g	PAG	ISO 46	180 cc	**699935**
XC90	2002-2007	R134a	1000 g	PAG	ISO 46	180 cc	**699935**
XC90 With rear AC	2002-2007	R134a	1300 g	PAG	ISO 46	180 cc	**699935**
XC90	2007-	R134a	1000 g	PAG	ISO 46	180 cc	**699935**
XC90 with rear AC	2007-	R134a	1300 g	PAG	ISO 46	200 cc	**699935**
VOLVO TRUCK						
F6 VOLVO 1160048	1990-1993	R134a	1400 g	PAG	ISO 46	310 cc	**699935**
F10 VOLVO 1160048	1990-1993	R134a	1400 g	PAG	ISO 46	310 cc	**699935**
F12	1990-1993	R134a	1400 g	PAG	ISO 46	310 cc	**699935**
F16	1990-1993	R134a	1400 g	PAG	ISO 46	310 cc	**699935**
FE	2006-	R134a	1280 g	PAG	ISO 46	175 cc	**699935**
FH12	1993-2001	R134a	1200 g	PAG	ISO 46	175 cc	**699935**
FH13	2005-	R134a	1150 g	PAG	ISO 100	175 cc	**699936**
FH16	1993-1999	R134a	1150 g	PAG	ISO 46	175 cc	**699935**
FL	2006-	R134a	1150 g	PAG	ISO 100	175 cc	**699936**
FL6	1993-1999	R134a	1150 g	PAG	ISO 46	175 cc	**699935**
FL0	1990-1993	R134a	1400 g	PAG	ISO 46	310 cc	**699935**
FM7	1998-	R134a	1150 g	PAG	ISO 46	175 cc	**699935**
FM9	2001-09.2005	R134a	1150 g	PAG	ISO 46	175 cc	**699935**
FM10	1999-	R134a	1150 g	PAG	ISO 46	175 cc	**699935**
FM12	1998-09.2005	R134a	1200 g	PAG	ISO 46	175 cc	**699935**
FM13	2005-	R134a	1250 g	PAG	ISO 46	175 cc	**699935**
NH12	1999-2008	R134a	1250 g	PAG	ISO 46	NC cc	**699935**

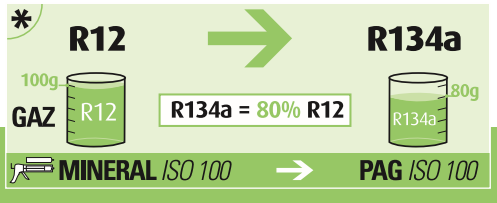

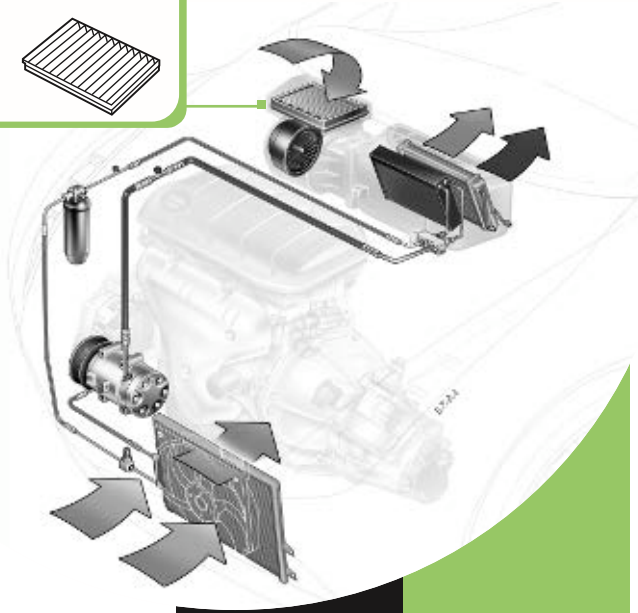

CABIN AIR FILTER
FILTRE D'HABITACLE
INNENRAUM-LUFTFILTER
FILTRO HABITACULO
FILTRO DE HABITÁCULO
FILTRO ABITACOLO
INTERIEUR LUCHTFILTER
FILTR KABINOWY
Воздушный Фильтр Салона
KABINOV FILTR
FILTRU AER DE HABITACLU
ФИЛТЪР КУПЕ
Filter kabine
K BIN FILTRESI
Φίλτρο Καμπ ίνας

2.2

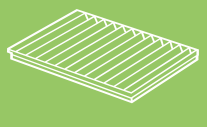

EN

Function

The cabin air filter prevents harmful pollutants from the surrounding air entering the cockpit via the air-conditioning and ventilation shafts.
There are 3 different technologies of cabin air filters:
- particle filters for solid pollutants: dust, tar, pollen..
- combined filters for solid pollutants + other pollution: exhaust fumes, bad odors...
- polyphenol filters for allergen (pollen) neutralization, solid pollutants, harmful gases, bad odours

Replacement

Essential for safety and comfort as well as the efficiency of the air-conditioning system, cabin air filters must be replaced regularly - every year or every 15.000 km (10 000 m)
The Cabin air filter can be located near the air entry or the evaporator.

Typical problems with cabin air filters
- Lack of air blown into the cabin (less air-conditioning, slower defogging…)
- Allergic reactions (sneezing, irritations…)
- Poor air quality in the cabin (bad odors, pollution…)

New packaging - CARTON

Valeo introduces the new carton packaging for its Cabin Air Filter range:
- ClimFilter™ "Comfort" for particle filters.
- ClimFilter™ "Protect" for combined filters.
- Current plastic bag packaging (delivered untill the stock lasts) is replaced by new carton packaging.
- Codification of cabin air filter part numbers remains unchanged (698xxx, 715xxx), only packaging type changes.

Repair recommendations
- Choose the right cabin air filter according to the vehicle.
- For the highest driver & passangers protection the polyphenol filter is recommended.
- Specific fitting instructions are included with all Valeo cabin air filters to promote efficient replacement.
- Valeo's recommendation for healthier air in the vehicle is to use an A/C cleaning and purifying treatment with every cabin air filter change.

FR

Fonction

Le filtre d'habitacle empêche les polluants nocifs de l'air extérieur d'entrer dans l'habitacle du véhicule par les conduits de ventilation et de climatisation. Il existe 3 technologies de filtres d'habitacle:
- les filtres à particules contre les polluants de type solide (poussières, suies, pollens...)
- les filtres combinés qui cumulent la fonction anti-particule à une fonction anti-pollution en protégeant des gaz d'échappement nocifs et des odeurs ambiantes désagréables...
- filtres polyphénol pour neutralisation des allergènes, polluants solides, gaz nocifs, mauvaises odeurs

Remplacement

Indispensable pour la sécurité et la confort ainsi que pour le bon fonctionnement de la climatisation, le filtre d'habitacle doit être remplacé tous les ans ou tous les 15.000 km minimum. Il est situé soit près de la grille d'auvent, soit près de l'évaporateur.

Problèmes les plus fréquents liés au filtre d'habitacle:
- Manque d'air pulsé dans l'habitacle (moins de froid, mauvais désembuage…)
- Réactions allergiques dans l'habitacle (éternuements, irritations…)
- Mauvaise qualité de l'air dans l'habitacle (odeurs, pollution…)

Nouveau packaging CARTON

Valeo présente le nouveau packaging de la gamme filtre d'habitacle :
- ClimFilter™ "Comfort" pour filtres à particules.
- ClimFilter™ "Protect" pour filtres combinés.
- Les packaging actuels en plastique (livré comme ceci jusqu' à épuisement des stocks) sont remplacés par de nouveaux packaging en carton.
- La codification des références de filtre d'habitacle reste inchangée (698xxx; 715xxx), seul le packaging évolue.

Recommandations Valeo pour la Réparation
- Choisissez le filtre habitacle pour votre véhicule.
- Le filtre polyphénol est recommandé pour une protection maximale des conducteurs et passagers.
- Optimisez votre prestation en vous référant aux notices de montage livrées avec les filtres d'habitacle Valeo.
- Pour une qualité de l'air optimale, pensez à utiliser un nettoyant purifiant du circuit de climatisation à chaque remplacement du filtre d'habitacle.

DE

Funktion
Der Innenraum-Luftfilter verhindert das Eindringen von Schadstoffen aus der Umgebungsluft in den Fahrzeuginnenraum durch die Lüftungs- und Klimatisierungsleitungen.
Drei verschiedene Innenraumluftfilter-Technologien stehen zur Verfügung:
- Partikelfilter für Schadstoffe in fester Form: Staub, Ruß, Pollen
- Kombifilter für feste und sonstige Schadstoffe (Abgase, unangenehme Gerüche usw.)
- Filter mit Polyphenol zur Neutralisierung von Allergenen, festen Schadstoffen, schädlichen Gasen, schlechten Gerüchen

Austausch
Innenraum-Luftfilter leisten einen unverzichtbaren Beitrag zur Sicherheit, zum Komfort und zur Leistungsfähigkeit des Klimasystems und müssen folglich regelmäßig ausgewechselt werden (einmal im Jahr oder alle 15.000 km). Der Innenraumfilter befindet sich in der Nähe des Lufteintritts oder des Verdampfers
Häufige Probleme mit Innenraum-Luftfiltern:
- Es wird zu wenig Luft in den Innenraum geblasen (unzureichende Leistung der Klimaanlage, die Scheiben bleiben beschlagen usw.)
- Allergiereaktionen der Fahrzeuginsassen (Niesen, Reizungen usw.)
- Schlechte Luftqualität im Innenraum (unangenehme Gerüche, Schadstoffe usw.)

Neue Verpackung - KARTON
Valeo stellt die neue Kartonverpackung für sein Sortiment an Innenraumluftfiltern vor:
- ClimFilter™ "Comfort" für Pollenfilter.
- ClimFilter™ "Protect" für Kombifilter.
- Die derzeitig verwendete Verpackung im Plastikbeutel (verwendet solange der Vorrat reicht) wird durch die neue Kartonverpackung ersetzt.
- Die Vernummerung der Artikel bleibt unverändert (698xxx, 715xxx), nur die Verpackungsart ändert sich.

Reparaturempfehlungen
- Wählen Sie den passenden Innenraumluftfilter für Ihr Fahrzeug aus.
- Für den höhsten Schutz für Fahrer und Insassen wird der Polyphenolfilter empfohlen.
- Alle Innenraum-Luftfilter von Valeo werden mit präzisen Montageanweisungen geliefert, die den fachgerechten Einbau garantieren.
- Valeo empfiehlt, bei jedem Auswechseln des Innenraum-Luftfilters eine Säuberung des Klimakreislaufs mit einem speziellen Reinigungsmittel vorzunehmen.

SP

Función
El filtro de habitáculo impide que los contaminantes nocivos del exterior entren en el habitáculo del vehículo por los conductos de ventilación y climatización.
Existen 3 tecnologías de filtros de habitáculo:
- los filtros de partículas para los contaminantes sólidos (polvo, alquitrán, polen, etc.)
- los filtros combinados para las partículas sólidas y otros contaminantes (gases de escape, olores desagradables, etc.)
- filtros de polifenol para la neutralización de alérgenos, contaminantes solidos, gases nocivos, malos olores

Sustitución
Indispensable para la seguridad y el confort, así como para el buen funcionamiento de la climatización, el filtro de habitáculo debe sustituirse regularmente, cada año o cada 15.000 km. Este filtro puede colocarse junto a la entrada de aire o al evaporador.
Problemas más frecuentes relativos al filtro de habitáculo:
- Falta de aire impulsado en el habitáculo (menos frío, antivaho más lento, etc.)
- Reacciones alérgicas (estornudos, irritaciones, etc.)
- Mala calidad del aire en el habitáculo (malos olores, contaminación, etc.)

Nuevo embalaje - CARTÓN
Valeo presenta el nuevo embalaje de cartón para su gama de Filtros de Habitáculo:
- ClimFilter™ "Comfort" para filtros de partículas.
- ClimFilter™ "Protect" para filtros combinados.
- El actual embalaje en bolsa de plástico es sustituido por el nuevo embalaje cartón.
- La codificación de referencias de los filtros de habitáculo se mantiene inalterada (698xxx, 715xxx). Los cambios afectaran únicamente al tipo de embalaje.

Recomendaciones para la reparación
- Elija el filtro de habitáculo adecuado para su vehículo.
- El filtro de polifenol es aconsejable para una máxima protección de conductor y ocupantes.
- Los filtros de habitáculo Valeo se entregan con instrucciones de instalación para facilitar un reemplazo eficaz.
- Para una calidad óptima del aire, Valeo recomienda aplicar un tratamiento de limpieza y/o purificación del circuito de climatización cada vez que se reemplace el filtro de habitáculo.

PT

Função
O filtro de habitáculo previne que os poluentes nocivos do ar entrem no habitáculo através do ar-condicionado e condutas de ventilação.
Há 3 tecnologias diferentes de filtros de habitáculo:
- filtros de partículas para poluentes sólidos: pó, polen, ...
- filtros combinados para poluentes sólidos + outra poluição: gases de escape, maus cheiros...
- filtros de polifenol para a neutralização de alergias, contaminantes sólidos, gases nocivos, maus odores

Substituição
Essential pela segurança e conforto bem como para a eficiencia do ar-condicionado, os filtros de habitáculo devem ser substituídos regularmente - todos os anos ou a cada 15.000 km.
O filtro de habitáculo encontra-se perto da entrada do ar ou do evaporador.
Problemas comuns com os filtros de habitáculo:
- Falta de fluxo de ar para o habitáculo (menos ar condicionado, desembaciamento mais lento….)
- Reacções alérgicas (espirros, irritações…)
- Fraca qualidade do ar no habitáculo(maus cheiros, poluição…)

Nova embalagem - CARTÃO
Valeo apresenta a nova embalagem de cartão para a sua gama de Filtros de Habitáculo:
- ClimFilter™ "Comfort" para filtros de partículas.
- ClimFilter™ "Protect" para filtros combinados.
- A actual embalagem em bolsa de plástico é substituida por uma nova embalagem de cartão.
- A codificação de referências dos filtros de habitáculo mantém-se inalterada (698xxx, 715xxx). As alterações afectam únicamente o tipo de embalagem.

Recomendações de reparação
- Escolha o filtro de habitáculo adequado para o seu veículo.
- O filtro de polifenol é aconselhável para uma máxima protecção do condutor e ocupantes.
- Instrucções de montagem específicas estão incluídas em todos os filtros de habitáculo Valeo promovendo uma substituição eficiente.
- A recomendação da Valeo para um ar mais saudável dentro do habitáculo, é a utilização de produtos de purificação e limpeza Valeo quando substitui um filtro de habitáculo (Climpur da Valeo).

IT

Funzione
Il filtro abitacolo previene che gli inquinanti nocivi dell'aria esterna entrino nell'abitacolo del veicolo attraverso i condotti del sistema di aerazione e di climatizzazione.
Esistono 3 diverse tecnologie di filtri abitacolo:
- i filtri particellari, contro gli inquinanti di tipo solido: polveri, catrame, polline....
- i filtri a carboni attivi, che uniscono la funzione antiparticelle ad una funzione antinquinante per trattenere i gas di scarico, gli odori sgradevoli...
- filtri ai polifenoli per la neutralizzazione degli allergeni (polline), inquinanti solidi, gas nocivi, cattivi odori

Sostituzione
Indispensabile per la sicurezza e il comfort, oltre che per il corretto funzionamento dell'impianto di aria condizionata, il filtro abitacolo deve essere sostituito una volta l'anno oppure almeno ogni 15.000 km. Il filtro abitacolo è situato vicino alla presa aria o all'evaporatore.
Problemi più frequenti relativi al filtro abitacolo:
- Aria insufficiente all'interno dell'abitacolo (scarso raffreddamento, disappannamento lento…)
- Reazioni allergiche, riniti, irritazioni…)
- Cattiva qualità dell'aria nell'abitacolo (odori sgradevoli, inquinamento…)

Nuovo packaging - CARTONE
Valeo presenta il nuovo packaging in cartone per la gamma dei Filtri Abitacolo:
- ClimFilter™ "Comfort" per filtri particellari.
- ClimFilter™ "Protezione" per filtri combinati.
- L'attuale packaging in plastica (consegnato fino ad esaurimento) è sostituito dal nuovo packaging in cartone.
- La codifica dei filtri abitacolo rimane invariata (698xxx, 715xxx) e cambia solo il tipo di packaging.(698xxx, 715xxx). Los cambios afectaran únicamente al tipo de embalaje.

Raccomandazioni Valeo per la riparazione
- Scegli il corretto filtro abitacolo per la tua auto.
- Il filtro ai polifenoli è consigliato per la massima protezione dei passeggeri.
- Tutti i filtri abitacolo Valeo vengono forniti insieme alle relative istruzioni di montaggio per garantire una sostituzione ottimale.
- Per un'aria più sana all'interno del veicolo, Valeo raccomanda di procedere alla pulizia e alla purificazione del circuito di aria condizionata ad ogni sostituzione del filtro abitacolo.

NL

Functie
De interieurfilter voorkomt dat schadelijke verontreinigende stoffen via de leidingen van de airconditioning en de ventilatie het interieur van het voertuig binnendringen.
Er zijn 3 verschillende technologieën interieurfilters:
- deeltjesfilters voor vaste verontreinigende stoffen: stof, teer, pollen..
- combinatiefilters voor vaste + niet-vaste verontreinigende stoffen: uitlaatgassen, onaangename geuren enz.
- polyfenolfilters voor allergieneutralisatie (pollen), vaste verontreinigende \stoffen, schadelijke gassen, onaangename geuren

Vervanging
Interieurfilters zijn belangrijk voor de veiligheid en het comfort, evenals voor de efficiënte werking van het airconditioningsysteem en moeten regelmatig worden vervangen - ieder jaar of na elke 15.000 km (10 000 m)
De interieurfilter bevindt zich vlakbij de luchtinlaat van de verdamper.
Problemen die het meest voorkomen bij interieur luchtfilters:
- Er wordt te weinig lucht het interieur in geblazen (slechte werking van de airconditioning, wasem verdwijnt langzamer…
- Allergische reacties (niezen, irritatie van de luchtwegen…)
- Slechte luchtkwaliteit in het interieur (onaangename geuren, verontreiniging enz.)

Nieuwe Verpakking - KARTON
Valeo introduceert een nieuwe kartone verpakking voor het Interieur Filter assortiment:
- ClimFilter™ "Comfort" voor particle filters.
- ClimFilter™ "Protect" voor combined filters.
- De huidige plastic verpakkingen (zo lang de voorraad strekt) is vervangen door een nieuwe kartone verpakking.
- De referentienummers van de Interieur Filters blijven ongewijzigd (698xxx, 715xxx), alleen de verpakking verandert.

Aanbevelingen bij de reparatie
- Kies het juiste interieurfilter, behorend bij het voertuig.
- Voor de hoogste bescherming van bestuurder en passagier wordt het polyfenolfilter geadviseerd.
- Bij alle Valeo interieurfilters zijn specifieke montage-instructies bijgesloten, zodat de filter zo efficiënt mogelijk vervangen kan worden.
- Voor optimale luchtkwaliteit in het voertuig adviseert Valeo om na iedere vervanging van de interieurfilter het airconditioningsysteem een reinigings- en zuiveringsbehandeling te geven.

PL

Funkcja

Filtr kabinowy zabezpiecza przed wnikaniem do wnętrza kabiny zewnętrznych szkodliwych zanieczyszczeń przez wloty systemu wentylacji i klimatyzacji.

Istnieją 3 różne technologie filtrów kabinowych.

- Filtry cząstek stałych chroni przed stałymi zanieczyszczeniami: kurzem i pyłkami.
- Filtr kombinowany chroni przed stałymi zanieczyszczeniami + zatrzymuje szkodliwe gazy i nieprzyjemne zapachy.
- Filtry z polifenolem neutralizujące alergeny (pyłki), wychwytujące zanieczyszczenia stałe, szkodliwe gazy, nieprzyjemne zapachy

Wymiana filtra

Dla zapewnienia bezpieczeństwa i komfortu jazdy jak równie wydajnoÁci układu klimatyzacji niezwykle istotna jest regularna wymiana filtra kabinowego - co rok lub co 15.000 km (10.000 mil).

Filtr kabinowy znajduje się przy nawiewie powietrza lub przy parowniku.

Typowe problemy z filtrami kabinowymi.

- Niedostateczny nawiew powietrza do kabiny (osłabiona klimatyzacja, wolniejsze odparowywanie szyb)
- Reakcje alergiczne (kichanie, podrażnienia...)
- Niska jakość powietrza w kabinie (nieprzyjemne zapachy, zanieczyszczenia...)

Nowe opakowanie - KARTON

Valeo przedstawia nowe kartonowe opakowanie dla gamy filtrów kabinowych:

- ClimFilter™ "Comfort" dla filtrów cząstek stałych.
- ClimFilter™ "Protect" dla filtrów z aktywnym węglem.
- Obecne opakowanie plastikowe (filtry dostarczane w tym opakowaniu do wyczerpania zapasów) jest zastąpione przez nowe opakowanie kartonowe.
- Kodowanie numerów referencji filtrów kabinowych pozostaje bez zmian (698xxx, 715xxx), zmianie ulega jedynie rodzaj opakowania.

Zalecenia serwisowe

- Wybierz odpowiedni filtr kabinowy dopasowany do parametrów pojazdu.
- Dla najwyższej ochrony kierowcy i pasażerów zalecany jest filtr z polifenolem.
- Korzystaj z instrukcji montażu filtra Valeo dołączonej do każdego opakowania by efektywnie wymieniać filtr kabinowy.
- Zgodnie z rekomendacją Valeo, by promować zdrowsze powietrze w kabinie pojazdu, stosuj środek czyszczący i odkażający system A/C (ClimPurTM) przy każdej wymianie filtra a także środek czyszczący wnętrze kabiny (ClimSprayTM).

RU

Функция

Салонные фильтры препятствуют проникновению в салон вредоносных частиц вместе с потоком воздуха из системы кондиционирования и вентиляционных патрубков.

Существует 3 технологии салонных фильтров:

- частичный фильтр, защищающий от твердых частиц: грязь, смолы, пыльца…
- угольный фильтр, защищающий от твердых частиц + других видов загрязнения: выхлопные газы, неприятные запахи…
- полифеноловые фильтры для нейтрализации действия аллергенов (полена), плотных загрязняющих частиц,вредных газов, неприятных запахов

Замена

Для безопасности и комфорта водителя, а также для эффективной работы системы кондиционирования, рекомендуется регулярно менять салонный фильтр (ежегодно, или каждые 15000 км)

Салонный фильтр может находиться рядом с воздуховодом или испарителем

Типичные проблемы с салонными фильтрами

- Снижение потока воздуха в салон (ниже уровень кондиционирования, запотевание стекол)
- Аллергические реакции (чихание, слезоточивость…)
- Плохой воздух в салоне (неприятный запах, частицы пыли….)

Новая картонная упаковка

Valeo представляет новую картонную упаковку для салонных фильтров.

- ClimFilter™ "Comfort" для фильтров без активированного угля.
- ClimFilter™ "Protect" для фильтров с активированным углем.
- Пластиковая упаковка фильтров (поставляется до окончания стока) заменяется новой картонной упаковкой.
- Артикулы остаются без изменений (698xxx, 715xxx), меняется только вид упаковки.

Рекомендации по замене

- Выберите наиболее подходящий фильтр в соответствии с параметрами Вашего автомобиля
- Для самой высокой степени защиты водителя и пассажиров рекомендуется использовать полифеноловый фильтр
- Специальные инструкции по установке прилагаются
- Valeo рекомендует использовать очиститель системы кондиционирования (ClimPurTM) при каждой замене фильтра вместе с очистителем воздуха в салоне (ClimSprayTM).

CZ

Funkce

Kabinový filtr zabraňuje pronikání škodlivin z ovzduší přes klimatizaci a ventilační otvory do kabiny vozu.

Existují 3 různé technologie kabinových filtrů:

- filtry pevných částic - pro pevné znečišťující látky: prach, dehet, pyl.
- kombinované filtry (s aktivním uhlíkem) - pro pevné znečišťující látky + další znečištění: výfukové plyny, pachy...
- polyfenolové filtry pro neutralizaci alergenů (pyly), zachycení pevných částic, škodlivých plynů, zápachu

V měna

Základním pravidlem pro bezpečnost a komfort, stejně tak jako pro správné fungování klimatizace, je nutnost pravidelné výměny kabinového filtru, a to každý rok nebo každých 15.000 km. Kabinový filtr může být umístěn blízko vstupu vzduchu do kabiny vozu nebo blízko výparníku.

Typické p íznaky starého kabinového filtru

- nedostatečný tok ventilovaného vzduchu do kabiny (nižší účinnost klimatizace, pomalejší odmlžení skla…)
- alergická reakce (kýchání, podráždění očí..)
- špatná kvalita vzduchu v kabině (zápach, znečištění …)

Nové kartonové balení

Valeo zavádí nové kartonové balení pro svoji řadu kabinových filtrů:

- ClimFilter™ "Comfort" pro částicové filtry.
- ClimFilter™ "Protect" pro kombinované filtry s aktivním úhlíkem.
- Aktuálně používané plastové balení (dodávané do vyčerpání skladových zásob) bude nahrazeno novým kartonovým balením.
- Kódování objednacích čísel kabinových filtrů zůstává nezměněno (698xxx, 715xxx), mění se pouze typ balení.

Doporučení pro údr bu

- Zvolte si správný kabinový filtr podle vozidla.
- Pro nejlepší ochranu řidiče i cestujících se doporučuje používat polyfenolové filtry.
- Montážní postupy pro snadnou výměnu kabinových filtrů jsou obsaženy v každém balení.
- Valeo doporučuje provést vyčištění systému klimatizace přípravkem ClimPur při každé výměně kabinového filtru.

HR

Funkcija

Filter kabine sprečava ulaženje štetnih tvari iz zraka preko klima uređaja i ventilacijskih otvora u kabinu vozila.

Postoje 3 različite tehnologije filtera kabine:

- filteri krutih čestica - za krute onečišćujuće tvari: prašina, čađa, pelud
- kombinirani filteri (s aktivnim ugljikom)
- za krute onečišćujuće tvari + drugo onečišćavanje: ispušni plinovi, loši mirisi...
- Filter s polifenolom za neutralizaciju alergenih tvari, krutih štetnih tvari, štetnih plinova, loših mirisa

Zamjena

Glavno pravilo za sigurnost i komfor, jednako kao i za ispravno funkcioniranje klima - uređaja je redovita izmjena filtera kabine, i to svake godine ili svakih 15.000 km. Filter kabine može biti postavljen u blizini ulaza zraka u kabinu vozila ili u blizinu isparavanja.

Tipični simptomi starog filtera kabine

- nedovoljan protok ventilacijskog zraka u kabini (manji učinak klima - uređaja sporije čišćenje od zamagljenosti…)
- alergične reakcije (kihanje, nadraženost očiju...).
- loša kvaliteta zraka u kabini (loši mirisi, prljavština...)

Nova kartonska ambala a

Valeo uvodi novu kartonsku ambalažu za svoju seriju kabinskih filtera:

- ClimFilter™ "Comfort" za filtere za filtriranje sitnih čestica.
- ClimFilter™ "Protect" za kombinirane filtere s aktivnim ugljikom.
- Aktualno korištena ambalaža od plastike (koja se koristi do iscrpljenja postojeće zalihe) bit će zamijenjena novom kartonskom ambalažom.
- Kodiranje brojeva za narudžbu kabinskih filtera ostaje bez promjena (698xxx, 715xxx), mijenja se samo vrsta ambalaže.

Preporuke za odr avanje

- Odaberite odgovarajući filter kabine za svoje vozilo.
- Za najveću zaštitu vozača i putnika preporuča se polifenolni filter.
- Postupci montaže za lakšu izmjenu filtera kabine nalaze se u svakom pakiranju.
- Valeo preporuča čišćenje sustava klima - uređaja dodatkom "ClimPur" prilikom svake izmjene filtera kabine.

HU

Funkciója

A pollenszűrő megakadályozza, hogy a légszennyezés a jármű szellőző- és klímarendszerén keresztül az utastérbe jusson.

3 különböz tipusú pollensz r létezik:

- szilárd részecske szűrő (por, korom, pollen,...)
- kombinált szűrők (aktív szenes szűrő), amelyek kiszűrik a szilárd részecskéket és egyben bizonyos gázokat is (kipufogógáz, kellemetlen szagok,...)
- polyphenol szűrők az allergének (pollenek) semlegesítéséért, szilárd szennyeződések, káros gázok és rossz szagok kiszűréséért

Cseréje

A pollenszűrő kulcsfontosságú biztonsági és kényelmi felszerelés, amely biztosítja a klímaberendezés hatékony működését. Ezért évente vagy 15.000 km-enként cserélni kell.

A pollenszűrő általában a levegőbeszívó nyílás vagy a párologtató közelében található.

A pollenszűrővel kapcsolatos leggyakoribb problémák:

- A szellőző kevés levegőt juttat az utastérbe (kisebb hűtés, rossz páramentesítés...)
- Allergiás reakciók (tüsszentés, légúti irritáció...)
- Az utastér levegője rossz minőségű (szagok, légszennyezés...)

j kartondobozos csomagolás

A Valeo pollenszűrői mostantól új, kartondobozos csomagolásban:

- ClimFilter™ "Comfort" - részecske szűrő.
- ClimFilter™ "Protect" - aktív szenes szűrú.
- A jelenlegi bliszteres csomagolás csak a készlet erejéig kapható.
- A cikkszámok nem változnak (698xxx, 715xxx), csak a csomagolás újul meg.

A Valeo tanácsa

- Válassza a megfelelő pollenszűrőt járműtípusához.
- A legmagasabb szintű vezető & utas védelemért a polyphenolos pollenszűrő használata javasolt.
- Hatékonyabbá teheti a munkafolyamatot, ha követi a szűrő csomagolásában található, a Valeo által mellékelt szerelési útmutatót.
- Az utastér levegője akkor lesz igazán tiszta és egészséges, ha a pollenszűrő cseréjével egyidejűleg speciális tisztítószerrel kitisztítja a szellőző- és klímaberendezést.

RO

Funcţiune:
Filtrul de habitaclu împiedică poluanţii nocivi din aerul exterior să intre în habitaclu vehiculului prin conductele de ventilaţie şi de climatizare.
Există 3 tehnologii de filtre de habitaclu:
- filtrele cu particulă împotriva poluanţilor de tip solid (prafuri, funingini, polenuri...)
- filtrele combinate care cumulează funcţia anti-particulă cu funcţia anti-poluare protejând de gazele nocive de etapament şi de mirosurile ambiante dezagreabile.
- Filtre cu polifenol pentru alergeni (polen), neutralizare, poluanţi solizi, gaze nocive, mirosuri neplăcute

Înlocuire:
Indispensabil pentru siguranţă şi confort ca şi pentru buna funcţionare a climatizării, filtru de habitaclu trebuie să fie înlocuit în fiecare an sau cel puţin la fiecare 15000 km.
Este situat sau aproape de intrarea de aer sau aproape de ventilator
Problemele cele mai frecvente legate de filtru de habitaclu:
- Lipsa de aer pulsat în habitaclu
- Reacţii alergice în habitaclu (strănuturi, iritaţii...)
- O calitate slabă a aerului în habitaclu (mirosuri,poluare...)

Nou Ambalaj - Carton
Valeo prezintă noile ambalaje prentru filtre de habitaclu:
- ClimFilter™ "Comfort" pentru filtre de particule.
- ClimFilter™ "Protect" pentru filtre combinate.
- Ambalajele actuale din pungi de plastic (furnizate până la epuizarea stocului) sunt înlocuite cu ambalaje noi de carton
- Codurile pentru filtre de habitaclu rămân neschimbate (698xxx, 715xxx), doar tipul de ambalaj se schimbă.

Recomandările Valeo pentru reparaţie:
- Alegeţi filtrul potrivit pentru habitaclu în funcţie de autovehicul.
- Filtrul cu polifenol este recomandat pentru o protecţie maximă a conducătorului şi a pasagerilor.
- Optimizaţi prestaţia d'voastră referindu-vă la notiţele de montare livrare cu filtrele de habitaclu Valeo.
- Pentru o calitate deosebită a aerului, utilizaţi un produs care purifică circuitul de climatizare la fiecare înlocuitor de filtru de habitaclu (Climpur Valeo).

BG

Функции
Филтрите купе предпазват вредните замърсители от околната среда да преминат в купето чрез вентилационната система на автомобила.
Има 2 различни технологии за филтри купе:
- Филтри за твърди частици : прах, обгорели прашинки ...
- комбинирани филтри за твърди частици + други замърсители : изгорели газове, лоши миризми

Подмяна
Необходим за безопасността и комфорта както и за добрата работа на климатичната система. Филтрите купе следва да бъдат подменяни регулярно всяка година или на 15 000 км (10 000 м).
Филтърът купе може да бъде разположен в близост до входящия въздух или изпарителя. "
Някои проблеми при филтрите за купе:
- Липса на въздушна струя в купето (по - слаба работа на вентилацията/ климатика)
- Алергични реакции (дразнене, кихане..)
- Ниско качество на въздуха в купето (лоши миризми, замърсяване)

Нова картонена опаковка
Valeo представя нови картонени опаковки за гамата на филтри купе
- ClimFilter™ "Comfort" филтър за твърди частици (поленов)
- ClimFilter™ "Protect" за комбиниран (карбонов) филтър
- Сегашната пластмасова опаковка (доставя се до изчерпване на наличностите)се заменена с нова картонена опаковка
- Номерацията на филтрите купе остава непроменена(698xxx,715xxx),променя се само типа на опаковката

Препоръки при смяна
- Изберете точния филтър купе според спецификациите на автомобилопроизводителя
- За градски условия филтърът купе е препоръчително да бъде с активен въглен (карбонов), за да осигури комфорт на шофьора и неговите спътници
- Инструкции за монтаж на филтър купе с марката Валео са поставени във всяка една опаковка, за да допринесе за правилната подмяна.
- Препоръките на Валео за здравословен въздух в купето са да използвате препарати за почистване на климатика и вентилационната система при всяка подмяна на филтъра купе

TU

İşlev
Kabin hava filtreleri dış ortamdan klima ve havalandırma kanalları yoluyla kabine girebilecek her türlü zararlı maddeyi engellemek üzere tasarlanmışlardır.
- Parçacık filtreleri katı maddeleri engellerler (toz, katran, polen...)
- Kombine filtreler katı maddelerle birlikte diğer kirleticileri de engeller (egzost dumanı, kötü kokular...)
- Polifenol filtreler alerji yapan maddeleri (polen) nötürleştirir, parçacıkları, zararlı gazları ve kötü kokuları filtreler.

Değişim
Güvenli ve konforlu bir ortamın sağlanması yanında klima sisteminin etkinliği için kabin hava filtrelerinin düzenli olarak her yıl ya da her 15000 kilometrede bir değiştirilmesi gerekir. Kabin hava filtreleri hava kanalı girişi ya da evaporatör yanında konumlandırılmış olabilir.
Kabin hava filtreleriyle ilgili olası sorunlar:
- Kabine üflenen havada yetersizlik (daha az iklimlendirme, cam buğusunun geç açılması...)
- Sürücü ve yolcularda alerjik tepkiler (hapçırma, göz sulanması...)
- Kabin içindeki kötü hava kalitesi (kötü kokular, kirlilik...)

Yeni karton ambalaj
Valeo kabin filtresi grubunda yeni karton ambalajlı sunum:.
- ClimFilter™ "Comfort" Parçacık filtreleri.
- ClimFilter™ "Protect" Karbonlu kombine filtreler.
- Plastik ambalajların yerini yeni karton ambalajlar alacaktır (stok bitiminde)
- Kabin filtre referanslarında (698xxx,715xxx) ambalaj değişimi sırasında herhangi bir farklılık olmayacaktır

Onarım tavsiyeleri
- Aracınız için doğru kabin filtresini seçin!
- Sürücü ve yolcuların üst seviyede korunması için polifenol filtre önerilir.
- Doğru uygulama yapılabilmesi için tüm Valeo kabin hava filtrelerinde montaj talimatnamesi mevcuttur.
- Araç içinde sürekli olarak sağlıklı ortam oluşturulabilmesi için her filtre değişiminde Valeo bir klima sistemi temizleyicisi ve arındırıcısı kullanılmasını önerir (Valeo Climpur).

GR

Λειτουργία :
Το φίλτρο καμπίνας εμποδίζει τις επιβλαβείς ρυπογόνες ουσίες του εξωτερικού αέρα να εισέλθουν στο αυτοκίνητο μέσω των αγωγών του εξαερισμού και του κλιματισμού. Υπάρχουν 3 διαφορετικές τεχνολογίες φίλτρων καμπίνας:
- φίλτρα σωματιδίων για στερεούς ρύπους: σκόνη, πίσσα, γύρη..
- συνδυασμένα φίλτρα για στερεούς ρύπους + άλλους ρύπους: αέρια εξάτμισης, δυσάρεστες οσμές...
- φίλτρα Ιολυφενόλης για εξουδετέρωση αλλεργιογόνων (γύρη) & ρυλογόνων ουσιών, ελιβλαβή αέρια και δυσοσμίες. Ελιλέξτε το σωστό φίλτρο καμίνας ανάλογα με το όχημα

Αντικατάσταση :
Ουσιαστική για την ασφάλεια και άνεση καθώς και για την καλή απόδοση του συστήματος κλιματισμού, τα φίλτρα καμπίνας πρέπει να αντικαθίστανται τακτικά - κάθε χρόνο ή κάθε 15.000 χλμ.
Το Φίλτρο καμπίνας βρίσκεται κοντά στην είσοδο αέρα ή στον εξατμιστή.

Συνηθισμένα προβλήματα με τα φίλτρα αέρα της καμπίνας.:
- Ελλειψη του αέρα που εισέρχεται στην καμπίνα (ανεπαρκής κλιματισμός, αργό ξεθόλωμα...).
- Αλλεργικές αντιδράσεις (φτάρνισμα, ερεθισμοί...).
- Κακή ποιότητα του αέρα στην καμπίνα (δυσοσμία, μόλυνση...).

Νέα χάρτινη συσκευασία :

Η Valeo παρουσιάζει τη νέα χάρτινη συσκευασία για τη σειρά Φίλτρων Καμπίνας:
- ClimFilter™ "Comfort" για φίλτρα σωματιδίων.
- ClimFilter™ "Protect" για φίλτρα ενεργού άνθρακα.
- Η τωρινή πλαστική συσκευασία (διαθέσιμη μέχρι εξαντλήσεως των αποθεμάτων) αντικαθίσταται από τη νέα χάρτινη συσκευασία
- Η κωδικοποίηση των φίλτρων καμπίνας παραμένει απαράλλαχτη (698xxx, 715xxx), μόνο η συσκευασία αλλάζει.

Προτάσεις απο την Valeo για την επισκευή :

- Ειλέξτε το σωστό φίλτρο καμίνας ανάλογα με το όχημα.

- Για τη μεγαλύτερη ασφάλεια των οδηγών και των ειβατών, συνιστάται το φίλτρο Ιολυφενόλης .

- Ειδικές οδηγίες συναρμολόγησης εσωκλείονται σε όλα τα φίλτρα καμπίνας της Valeo για γρήγορη και αποτελεσματική αντικατάσταση.

- Για την καλύτερη ποιότητα του αέρα μέσα στο όχημα, η Valeo προτείνει να ακολουθείτε μια αντιβακτηριακή επεξεργασία του συστήματος κλιματισμού κάθε φορά που αλλάζετε το φίλτρο καμπίνας.

	A/C				PA OE	PA Valeo	CA OE	CA Valeo	PCA Valeo
ABARTH									
Nuova 500	A+			08/08 ▸	46723321	**698866**	77365763	**715723**	
Nuova 500	M+			08/08 ▸	46723321	**698866**	77365763	**715723**	
Grande Punto	A+			09/07 ▸	55702456	**715552**	55702468	**715553**	**▲701003**
Grande Punto	M+			09/07 ▸	55702456	**715552**	55702468	**715553**	**▲701003**
Punto Evo	+/-			05/10 ▸	55702456	**715552**	55702468	**715553**	**▲701003**
ALFA ROMEO									
145	+			09/94 ▸ 06/01	46721923	**698174**			
146	+			12/94 ▸ 06/01	46721923	**698174**			
147 (2000>)	+/-		2x	10/00 ▸			46799653	**698747**	**▲701017**
155	+			01/93 ▸ 08/97	46721923	**698174**			
156 (97>2003)	+/-			09/97 ▸ 03/03	60653641	**698197**	60815647	**698687**	
156 (97>2003)	+/-			09/97 ▸ 03/03	60653642	**698689**			
156 (2003>)	+		2x	04/03 ▸ 06/05			46799653	**698747**	**▲701017**
159	+			09/05 ▸	71754158	**715532**	77363370	**715533**	
164 (87>98)	+			07/87 ▸ 09/98	7797229	**698199**			
166 (98>)	+			10/98 ▸			60814643	**698688**	
Brera	+			01/06 ▸	77363481	**715532**	77363370	**715533**	
Giulietta (2010>)	+/-			06/10 ▸	77365352	**•715705**			
GTV (95>2006)	+/-			12/94 ▸ 01/06	46721923	**698174**			
GT	+/-		2x	09/03 ▸			46799653	**698747**	**▲701017**
MiTo	+/-			08/08 ▸	55702456	**715552**	55702468	**715553**	**▲701003**
Spider (95>2003)	+			04/95 ▸ 02/03	46721923	**698174**			
Spider (2003>)	+/-			03/03 ▸ 03/06	46721923	**698174**			
Spider (2006>)	+			08/06 ▸	77363481	**715532**	77363370	**715533**	
AUDI									
80 (91>95) 8C-P-250 001 ▸	+/-			05/93 ▸ 07/95	8A0819439	**698164**	8D0091800	**715578**	
90 (91>95)	+/-			07/93 ▸ 11/94	8A0819439	**698164**	8D0091800	**715578**	
100 (90>94)	+/-			12/90 ▸ 07/94			4A0091800	**698684**	
A1	+/-			07/10 ▸	6R0820367	**•715737**	6R0819653	**•715727**	
A2	+/-			06/00 ▸	6Q0820367	**698685**	6Q0819653	**698739**	**▲701009**
A3 (96>2003)	+/-			09/96 ▸ 06/03	1H0819644B	**698159**	1H0091800	**698686**	
A3 (96>2003)	+/-		w/o Plastic Frame	09/96 ▸ 06/03	1H0819644B	**698885**			
A3 (2003>)	+/-			05/03 ▸	1K0819644A	**698800**	1K1819653A	**698801**	**▲701001**
A3 (2003>)	+/-			05/03 ▸			1K2819653	**715665**	
A3 (2012>)	+/-		ultrafine	03/12 ▸			5Q0818653	**715720**	**▲701020**
A4 (94>2000)	+/-			11/94 ▸ 11/00	8A0819439A	**698164**	8D0091800	**715578**	
A4 Avant (95>2001)	+/-			07/95 ▸ 09/01	8A0819439A	**698164**	8D0091800	**715578**	
A4 (2000>2007)	+/-			12/00 ▸ 10/07	8E0819439	**698606**	4B0819439C	**698683**	**▲701023**
A4 (2007>)	+/-			11/07 ▸	8K0819439	**715579**	8K0819439A	**715580**	
A4 Cabriolet (2002>)	+/-			04/02 ▸ 12/05	8E0819439	**698606**	4B0819439C	**698683**	**▲701023**
A4 Cabriolet II (2006>)	+			01/06 ▸	8E0819439	**698606**	4B0819439C	**698683**	**▲701023**
A5 (2007>)	+/-			06/07 ▸	8K0819439	**715579**	8K0819439A	**715580**	
A5 Cabriolet (2009>)	+/-			03/09 ▸	8K0819439	**715579**	8K0819439A	**715580**	
A6 (94>97)	+/-			07/94 ▸ 09/97	4A0819439A	**715683**	4A0091800	**698684**	
A6 (97>2001) 4B-X-045 000 ▸	+/-			04/97 ▸ 11/98	4A0819439A	**715683**	4B0819439A	**698682**	

• **New** Nouveau **Neu** Nuevo **Novo** Nuovo **Nieuw** Nowi **Новый** Novy **Nou** Yeni **Νέους**

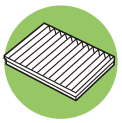

	A/C				PA OE	PA Valeo	CA OE	CA Valeo	PCA Valeo
AUDI									(.../...)
A6 (97>2001) 4B-X-045 001 ▸	-			11/98 ▸ 04/99			4B0819439C	**698683**	**▲701023**
A6 (97>2001) 4B-X-045 000 ▸	+			11/98 ▸ 05/01	8E0819439	**698606**	4B0819439C	**698683**	**▲701023**
A6 (2001>2004)	+			06/01 ▸ 04/05			4B0819439C	**698683**	**▲701023**
A6 (2004>)	A+		2x	04/04 ▸	4F0819439	**715500**	4F0898438A	**715501**	
A6 Allroad (2000>2006)	+			05/00 ▸ 04/06			4B0819439C	**698683**	**▲701023**
A6 Allroad (2006>)	+		2x	05/06 ▸ 10/10	4F0819439	**715500**	4F0819439A	**715501**	
A6 (2010>)	+/-			11/10 ▸			4H0819439	**•715733**	
A6 Allroad (2012>)	+/-			01/12 ▸			4H0819439	**•715733**	
A7 (2010>)	+/-			07/10 ▸			4H0819439	**•715733**	
A8 (94>2002)	+/-		2x	06/94 ▸ 09/02	4D0819439	**698790**	4D0819439A	**698791**	
A8 (2002>2009)	+			10/02 ▸ 10/09			4E0819439A	**698792**	
A8 (2009>)	+/-			11/09 ▸			4H0819439	**•715733**	
Cabriolet	+/-			06/93 ▸ 08/00	8A0819439	**698164**	8D0091800	**715578**	
Coupé (88>96) 88P-008 001 ▸	+/-			07/94 ▸ 01/96	8A0819439	**698164**	8D0091800	**715578**	
Q3	+/-			06/11 ▸	1K0819644B	**698800**	1K1819653B	**698801**	**▲701001**
Q3	+/-			06/11 ▸			1K2819653B	**715665**	
Q5	A+			11/08 ▸	8K0819439	**715579**	8K0819439A	**715580**	
Q7	+			03/06 ▸	7H0819631	**715581**	7H0819631A	**698768**	
RS2 (94>95)	+			03/94 ▸ 06/95	8A0819439	**698164**	8A0819439B	**715578**	
RS4 Quattro	+			06/00 ▸ 09/01	8A0819439A	**698164**	8D0091800	**715578**	
RS4 Quattro V8 FSi (2005>)	+			11/05 ▸			4B0819439C	**698683**	**▲701023**
RS5 Coupé Quattro (2010>)	+			03/10 ▸	8K0819439	**715579**	8K0819439A	**715580**	
RS6 Quattro	+			07/02 ▸ 09/04			4B0819439C	**698683**	**▲701023**
RS6 (4F) (2008>)	A+			04/08 ▸			4F0898438A	**715501**	
R8	A+			04/07 ▸			4F0898438A	**715501**	
S3 (98>2003)	+/-			11/98 ▸ 06/03			1J0819644A	**698716**	**▲701016**
S3 (2006>)	+/-			10/06 ▸	1K0819644B	**698800**	1K1819653B	**698801**	**▲701001**
S3 (2006>)	+/-			10/06 ▸			1K2819653B	**715665**	
S4 (97>99)	+/-			10/97 ▸ 01/99	8A0819439A	**698164**	8D0091800	**715578**	
S4 (99>2001)	+			02/99 ▸ 09/01			4A0091800	**698684**	
S4 V8 (2003>)	+			03/03 ▸ 10/08	8E0819439	**698606**	4B0819439C	**698683**	**▲701023**
S4 Cabriolet II (2004>)	+			02/04 ▸	8E0819439	**698606**	4B0819439C	**698683**	**▲701023**
S4 (2008>)	A+			11/08 ▸	8K0819439	**715579**	8K0819439A	**715580**	
S5	+/-			06/07 ▸	8K0819439	**715579**	8K0819439A	**715580**	
S6 (94>97)	+			07/94 ▸ 10/97			4A0819439A	**698684**	
S6 (99>2001)	+			09/99 ▸ 05/01			4B0819439C	**698683**	**▲701023**
S6 (2001>2005)	+			06/01 ▸ 01/05			4B0819439C	**698683**	**▲701023**
S6 (2006>2011)	+			06/06 ▸ 03/12	4F0819439	**715500**	4F0898438A	**715501**	
S7	+/-			04/12 ▸			4H0819439	**•715733**	
S8 (96>2002)	+		2x	09/96 ▸ 09/02			4D0819439A	**698791**	
S8 (2006>2011)	+			06/06 ▸ 03/12			4E0819439A	**698792**	
S8 (2012>)	+/-			04/12 ▸			4H0819439	**•715733**	
TT (98>2006)	+/-		w/o Plastic Frame	10/98 ▸ 07/06	1H0819644B	**698885**			
TT (98>2006)	+/-			10/98 ▸ 07/06	1H0819644B	**698159**	1J0819644A	**698716**	**▲701016**
TT II (2006>)	+			08/06 ▸	1K0819644A	**698800**	1K1819653A	**698801**	**▲701001**
TT coupe	+/-			05/06 ▸			1K2819653	**715665**	

	A/C				PA OE	PA Valeo	CA OE	CA Valeo	PCA Valeo
AUDI (.../...)									
TT Roadster	+/-			01/07 ▸			1K2819653	**715665**	
BENTLEY									
Continental Flying Spur	+		2x	03/05 ▸			3D0898644, 3D0819619A	**698793**	
Continental GT	+		2x	06/03 ▸			3D0898644, 3D0819619A	**698793**	
Continental GTC	+		2x	12/06 ▸			3D0898644, 3D0819619A	**698793**	
Mulsanne	+			10/09 ▸			4H0819439	**•715733**	
BMW									
1 series E87	+/-			09/04 ▸	64316946629	**715502**	64319142115	**715503**	
1 series E87	A+			09/04 ▸			64319142115	**715503**	
1 Serie (2012>)	+/-			04/12 ▸			64119283497	**715719**	**▲701019**
3 series E36	+			12/90 ▸ 02/00	64119069895	**698171**			
3 series E36 Compact	+		2x	02/94 ▸ 04/01	64319071933	**698469**			
3 series E46	+/-			03/98 ▸	64311000004	**698489**	64319071935	**698750**	
3 series E90/E91/E92	+/-			03/05 ▸	64316946629	**715502**	64319142115	**715503**	
3 series E90/E91/E92	A+			03/05 ▸			64319142115	**715503**	
3 Serie (2012)	+/-			04/12 ▸			64119283497	**715719**	**▲701019**
5 series E34	+			11/87 ▸ 09/96	64311390836	**698170**			
5 series E39	+/-		2x	09/95 ▸ 04/04	64319069927	**715685**	64110008138	**698246**	
5 series E60/E61	+		2x	05/03 ▸	64316935822	**698863**	64316935823	**698864**	
5 series (F10, F11, F18)	+/-		2x	10/09 ▸	64119163328	**715715**	64119163329	**715690**	
6 series (F12, F13)	+/-		2x	03/10 ▸	64119163328	**715715**	64119163329	**715690**	
6 series (E63/E64)	+		2x	09/03 ▸	64316935822	**698863**	64316935823	**698864**	
7 series E32	+			09/86 ▸ 05/94	64311390836	**698170**			
7 series E38	+		2x	06/94 ▸ 08/01	64319069926	**698838**	64319070072	**698470**	
7 series (E65/E66)	A+		2x	09/01 ▸	64116921018	**698856**	64116921019	**698857**	
7 series (E65/E66)	+/-		Rear AC	11/01 ▸			64106907746	**715582**	
7 series (F01,F02)	+/-		2x	10/08 ▸	64119163328	**715715**	64119163329	**715690**	
M3 E36	+			06/92 ▸ 06/00	64119069895	**698171**			
M3 E46	+			07/00 ▸ 06/06	64311000004	**698489**	64319071935	**698750**	
M3 (E90-92)	+/-			09/07 ▸			64319159606	**715712**	
M3 E90M LCI	+/-			09/08 ▸			64319159606	**715712**	
M5 E34	+			07/88 ▸	64311390836	**698170**			
M5 E39	+		2x	07/99 ▸	64319069927	**715685**	64110008138	**698246**	
M5 E60	+		2x	08/05 ▸	64316935822	**698863**	64316935823	**698864**	
M5 F10M	+		2x	09/11 ▸	64119163328	**715715**			
M6 (E63/E64)	+		2x	03/05 ▸	64316935822	**698863**	64316935823	**698864**	
M6 (F12/F13)	+/-		2x	03/12 ▸			64119272642	**715690**	
X1 E84	A+			10/09 ▸	64316946629	**715502**	64319142115	**715503**	
X1 E84	-			09/11 ▸	64319142114	**715502**			
X3 E83	+			10/03 ▸ 09/10	64311000004	**698489**	64319071935	**698750**	
X3 F25	+/-			09/10 ▸	64319237158	**715714**	64319237157	**715713**	
X5 E53	+			01/00 ▸ 11/06	64318409043	**698775**	64318409044	**698776**	
X5 E70	A+		2x	03/07 ▸	64316945585	**715583**	64316945586	**715584**	
X6 E71	A+		2x	05/08 ▸	64316945585	**715583**	64316945586	**715584**	
X6 E71M	-			04/12 ▸	64316945585	**715583**			
Z4 (E85/E86)	A+			09/02 ▸			64316915764	**698862**	

• **New** Nouveau **Neu** Nuevo **Novo** Nuovo **Nieuw** Nowi **Новый** Novy **Nou** Yeni **Νέους**

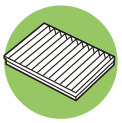

	A/C				PA OE	PA Valeo	CA OE	CA Valeo	PCA Valeo
BMW (.../...)									
Z4 (E85/E86)	M+			09/02 ▸	64316915763	**698861**	64316915764	**698862**	
Z4 (E89)	-			09/11 ▸	64319195193	**698861**			
CADILLAC									
BLS	+			04/06 ▸	6808601	**698711**	1808624	**698710**	**▲701010**
CTS	+			03/05 ▸			88957450	**715671**	
SRX	+			01/04 ▸			88957450	**715671**	
STS	+			05/05 ▸			88957450	**715671**	
CHEVROLET									
Aveo	+			02/06 ▸	96539649	**715535**			
Captiva (2006>2011)	+			06/06 ▸ 02/11	96800069	**715654**			
Captiva (2011>)	+/-			02/11 ▸			22753219	**•715731**	
Cruze	+/-			03/09 ▸	13271190	**715658**	13271191	**715659**	
Epica	+/-			05/06 ▸	96327366	**715587**			
Evanda	+			08/02 ▸ 06/06	96327366	**715587**			
Kalos	+			04/05 ▸	96539649	**715535**			
Lacetti	+			01/05 ▸	96554421	**715526**			
Magnus	+			03/05 ▸	96296618	**715587**			
Malibu	+/-			01/12 ▸	13271190	**715658**	13271191	**715659**	
Matiz	+			01/05 ▸	96425700	**715588**			
Nubira	+			01/05 ▸	96190645	**698860**			
Orlando	+/-			03/11 ▸	13271190	**715658**	13271191	**715659**	
Rezzo	+		2x	03/05 ▸	93740495	**715536**			
Spark (2005>2009)	+			05/05 ▸ 12/09	96425700	**715588**			
Spark (2010>)	+/-			01/10 ▸	95947238	**715707**	95215156	**715710**	
Tacuma	+		2x	03/05 ▸	93740495	**715536**			
Volt	+/-			11/11 ▸			13271191	**715659**	
CHRYSLER									
300C	+/-			09/04 ▸			04596501AB	**715648**	
Crossfire	+/-			07/03 ▸	5101438AA	**698169**	5101439AA	**698697**	
Crossfire Roadster	+/-			07/03 ▸	5101438AA	**698169**	5101439AA	**698697**	
Delta (2011>)	+/-			09/11 ▸	71736776	**715686**			
Grand Voyager (2004>)	+/-			07/04 ▸ 01/08			82205905	**698865**	
Grand Voyager (2004>)	+/-			07/04 ▸			5072176AA	**715611**	
Grand Voyager (2008>)	+/-			02/08 ▸	68042866AA	**•715711**			
PT Cruiser	+/-			06/00 ▸	50580040AA	**715534**			
Sebring (2006>)	+/-			03/07 ▸ 03/11	5058693AA	**•715735**			
Voyager (2001>2008)	+/-			03/01 ▸ 02/08			82205905	**698865**	
Voyager (2001>2008)	+/-			03/01 ▸ 02/08			5072176AA	**715611**	
Ypsilon (2011>)	+/-			09/11 ▸	51854923	**698866**			
CITROËN									
C Crosser	+			07/07 ▸	6447ZY	**715631**	6447ZY	**715623**	
C1	+			06/05 ▸	6447TV	**715515**			
C2	-			09/03 ▸	6447NT	**698664**			

▲ Soon available P/N Références disponibles prochainement **Artikel in Kürze lieferbar** Referencias disponibles próximamente **Referências disponiveis próximamente** Riferimenti disponibili nei prossimi mesi **Binnenkort leverbaar** Produkt wkrótce dostępny **Позиции скоро будут доступны** Produkt brzy dostupny **Uskoro u prodaji** Referințele disponibile în curând **Очаквайте скоро** Yakında sunulacak **Κωδικούς σύντομα διαθέσιμα**

	A/C				PA OE	PA Valeo	CA OE	CA Valeo	PCA Valeo
CITROËN (.../...)									
C2	A+			09/03 ▸			6447NV	**698714**	**▲701014**
C2	M+			09/03 ▸	6447NT	**698664**			
C3	-			04/02 ▸	6447NT	**698664**			
C3	A+			04/02 ▸			6447NV	**698714**	**▲701014**
C3	M+			04/02 ▸	6447NT	**698664**			
C3 (2009>)	A+		2x	10/09 ▸	6447VY	**715556**	6447VX	**715557**	**▲701007**
C3 Picasso (2009>)	M+			02/09 ▸	6447NT	**698664**			
C3 Picasso (2009>)	A+			02/09 ▸	6447NT	**698664**	6447NV	**698714**	**▲701014**
C3 Pluriel	-			05/03 ▸	6447NT	**698664**			
C3 Pluriel	A+			05/03 ▸			6447NV	**698714**	**▲701014**
C3 Pluriel	M+			05/03 ▸	6447NT	**698664**			
C4	A+			11/04 ▸ 10/09			6447NV	**698714**	**▲701014**
C4	M+			11/04 ▸ 10/09	6479C2	**698664**			
C4 II	A+			11/09 ▸			6447NV	**698714**	**▲701014**
C4 II	M+			11/09 ▸	6479C2	**698664**			
C4 Aircross	+/-			03/12 ▸	6479E9	**715631**			
C4 Picasso	+/-		2x	09/06 ▸	6447XF	**715554**	6447XG	**715555**	
C4 Grand Picasso	+/-		2x	10/06 ▸	6447XF	**715554**	6447XG	**715555**	
C5 (2001>2004)	+/-			02/01 ▸ 08/04	6447HT	**698540**	6447HV	**698541**	
C5 (2001>2004)	A+			02/01 ▸ 08/04			6447HV	**698541**	
C5 (2004>2008)	+			09/04 ▸ 04/08	647904	**715570**	6447TC	**698884**	**▲701002**
C5 (2008>)	+			05/08 ▸			647945	**715635**	
C6 (2005>2008)	A+			10/05 ▸ 03/08	647904	**715570**	6447TC	**698884**	**▲701002**
C6 (2008>)	+			04/08 ▸			647945	**715635**	
C8	+			06/02 ▸	6447LZ	**698738**	6447SP	**715558**	**▲701013**
DS3	A+		2x	03/10 ▸	6447VY	**715556**	6447VX	**715557**	**▲701007**
DS4	A+			04/11 ▸			647975	**698714**	**▲701014**
DS4	-			04/11 ▸	6479C2	**698664**			
DS5	+/-		2x	10/11 ▸	6447XF	**715554**	6447XG	**715555**	
Evasion (94>2002)	+/-		3x	07/94 ▸ 05/02	6447H0	**715530**			
Evasion (94>2002)	+/-		3x	07/94 ▸ 05/02	6447H1	**715530**			
Saxo (96>99)	+/-			03/96 ▸	6441G9	**715589**			
Synergie (95>2002)	+/-		3x	10/95 ▸ 05/02	6447H0, 6447H1	**715530**			
Xantia	+			03/93 ▸ 05/02	6447Z4	**698146**			
Xsara (N1) (97>2000)	-			07/97 ▸ 08/00	6447Z4	**698146**	6447SR	**715677**	
Xsara (N1) (97>2000)	+			07/97 ▸ 08/00	6447Z4	**698146**			
Xsara Break (N2)	+			07/97 ▸	6447HP	**698657**	6447SQ	**715629**	
Xsara Coupe (N0)	+			02/99 ▸	6447HP	**698657**	6447SQ	**715629**	
Xsara (2000>2005)	M+			09/00 ▸ 08/05	6447FG	**698731**			
Xsara (2000>2005)	A+			09/00 ▸ 08/05	6447HP	**698657**	6447SQ	**715629**	
Xsara Picasso	+/-			12/99 ▸	6447FF	**698680**	6447LN	**715612**	
CITROËN									
Berlingo (96>2002) 8805 ▸	+			07/96 ▸ 12/00	6447Z4	**698146**	6447SR	**715677**	
Berlingo (96>2002) 8806 ▸	+			12/00 ▸ 12/02	6447Z4	**698146**	6447SR	**715677**	
Berlingo (96>2002) 8806 ▸	+			12/00 ▸ 12/02	6447HP	**698657**			

• **New** Nouveau **Neu** Nuevo **Novo** Nuovo **Nieuw** Nowi **Новый** Novy **Nou** Yeni **Νέους**

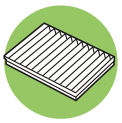

	A/C				PA OE	PA Valeo	CA OE	CA Valeo	PCA Valeo
CITROËN (.../...)									
Berlingo (2002>)	+			12/02 ▸	6447Z4	**698146**			
Berlingo (2002>)	+			12/02 ▸	6447HP	**698657**	6447SQ	**715629**	
Berlingo (2008>)	+/-		2x	04/08 ▸	6447XF	**715554**	6447XG	**715555**	
Dispatch (2004>2006)	+			01/04 ▸ 12/06	6447KR	**698657**			
Dispatch (2007>)	+/-			01/07 ▸	6447YK	**715614**	6447YN	**715613**	
Jumper (94>2001)	+			02/94 ▸ 12/01	6447SY	**698858**			
Jumper (2002>2006)	+			01/02 ▸ 06/06	6447SY	**698858**			
Jumper (2006>)	+/-			07/06 ▸ 09/11	6447YC	**715636**			
Jumper (2011>)	+/-			10/11 ▸	6479C9	**715636**			
Jumpy I	+		3x	09/95 ▸ 12/03	6447H0, 6447H1	**715530**			
Jumpy I (Facelift)	+			01/04 ▸ 12/06	6447LZ	**698738**	6447SP	**715558**	**▲701013**
Jumpy II	+/-			01/07 ▸	6447YN	**715614**	6447YK	**715613**	
Nemo	+/-			02/08 ▸	647962	**715616**			
Nemo	+/-			07/05 ▸	647984	**715552**			
Relay (94>2001)	+			02/94 ▸ 12/01	6447YL	**698858**			
Relay (2002>2006)	+			01/02 ▸ 06/06	6447TY	**698858**			
Relay (2006>)	+/-			07/06 ▸	6479C9	**715636**			
DACIA									
Duster	+/-			03/10 ▸	272775374R	**698753**			
Logan	+/-			09/04 ▸	7701062227	**698753**			
Sandero	+/-			06/08 ▸	7701062227	**698753**			
DACIA									
Lodgy	+/-			03/12 ▸	272772835R	**698753**			
DAEWOO									
Kalos	+			09/02 ▸ 03/05	96539649	**715535**			
Lacetti	+			10/03 ▸ 12/04	96554421	**715526**			
Leganza	+			09/97 ▸ 12/04	96207422	**698859**			
Nubira	+			11/96 ▸ 07/03	96190645	**698860**			
Nubira	+			07/03 ▸	96554421	**715526**			
Matiz	+			03/05 ▸	96425700	**715588**			
Rezzo	+		2x	09/00 ▸ 03/05	93740495	**715536**			
Tacuma	+		2x	09/00 ▸ 03/05	93740495	**715536**			
DAF									
65 CF	+/-			09/98 ▸ 12/00	1347066	**716004**			
CF 65	+/-			01/01 ▸		1347066	**716004**		
75 CF	+/-			03/98 ▸ 12/00	1347066	**716004**			
CF 75	+/-			01/01 ▸	1347066	**716004**			
85 CF	+/-			03/98 ▸ 12/00	1347066	**716004**			
CF 85	+/-			01/01 ▸	1362124	**716007**	1362168	**716008**	
LF 45	+/-			02/01 ▸	1600428	**716001**			
LF 55	+/-			02/01 ▸	1600428	**716001**			
95 Serie	+/-			09/87 ▸ 01/98	1347068	**716005**			
95 XF	+/-			02/98 ▸ 09/02	1658991	**716006**			

▲ **Soon available P/N** Références disponibles prochainement **Artikel in Kürze lieferbar** Referencias disponibles próximamente **Referências disponiveis próximamente** Riferimenti disponibili nei prossimi mesi **Binnenkort leverbaar** Produkt wkrótce dostępny **Позиции скоро будут доступны** Produkt brzy dostupny **Uskoro u prodaji** Referințele disponibile în curând **Очаквайте скоро** Yakında sunulacak **Κωδικούς σύντομα διαθέσιμα**

	A/C				PA OE	PA Valeo	CA OE	CA Valeo	PCA Valeo
DAF (.../...)									
XF 95	+/-			10/02 ▸		1658991	**716006**		
XF 105	+/-			01/06 ▸	1658991	**716006**			
DAIHATSU									
Charade	+/-			05/11 ▸	871390D010	**715620**	8713950060	•**715730**	▲**701021**
Cuore VII	+			05/03 ▸ 08/07	99906850M2-036	**715590**			
Cuore VIII	+			09/07 ▸			08975K2000-100	**715695**	
Sirion II	+			01/05 ▸	99906850M2-038	**715637**			
Terios	+			05/06 ▸			08975K2000-100	**715695**	
DODGE									
Avenger	+/-			07/07 ▸ 11/10	5058693AA	•**715735**			
Caliber	+			07/06 ▸ 05/11	5058693AA	•**715735**	5058381AA	**715537**	
Journey	+			06/08 ▸ 05/11	5058693AA	•**715735**	5058381AA	**715537**	
Magnum	+			09/04 ▸			04596501AB	**715648**	
Nitro	+/-			06/07 ▸	68033193AA	**715696**			
DODGE									
Sprinter	+/-			02/95 ▸ 05/06	05103600AA	**698840**			
FIAT									
500	+/-			07/07 ▸	46723321	**698866**	77365763	**715723**	
500C	+/-			09/09 ▸	46723321	**698866**	77365763	**715723**	
Albea	+/-			01/02 ▸	7082301	**715615**			
Barchetta	+			01/95 ▸	46721374	**698198**			
Brava	+/-			06/95 ▸	46412715	**698689**			
Brava	+/-			06/95 ▸	46442422	**698197**	46768502	**698687**	
Bravo I	+/-			06/95 ▸ 03/07	46412715	**698689**			
Bravo I	+/-			06/95 ▸ 03/07	46442422	**698197**	60815647	**698687**	
Bravo II	+/-			04/07 ▸	46723435	**715686**	46723435	**698692**	
Coupe	+			07/96 ▸	71712596	**698174**			
Croma (91>96)	+			01/91 ▸ 12/96	60811242	**698199**			
Croma II (2005>)	+			06/05 ▸			46844822	**698710**	▲**701010**
Freemont	+			08/11 ▸	05058696AA	•**715735**	K05058693AA	**715537**	
Idea	+/-		w/o Plastic Frame	10/03 ▸	46723331	**698867**			
Linea	+/-			07/07 ▸	77364561	**715616**			
Marea	+/-			07/96 ▸	46412715	**698689**			
Marea	+/-			07/96 ▸	46442422	**698197**	46768502	**698687**	
Marengo (185) (95>)	+/-			01/95 ▸	46412715	**698689**			
Marengo (185) (95>)	+/-			01/95 ▸	46442422	**698197**			
Multipla	+			11/98 ▸	46794399	**698454**			
Palio ▸ 0596832	+			07/96 ▸	7078711	**698691**			
Palio 0596832 ▸	+			06/99 ▸	7079682	**698690**			
Palio	+/-			09/99 ▸	7082301	**715615**			
Panda (2003>)	+/-			09/03 ▸	46723321	**698866**	77365763	**715723**	

• **New** Nouveau **Neu** Nuevo **Novo** Nuovo **Nieuw** Nowi **Новый** Novy **Nou** Yeni **Νέους**

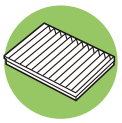

	A/C				PA OE	PA Valeo	CA OE	CA Valeo	PCA Valeo
FIAT									(.../...)
Punto (93>99)	+/-			07/93 ▸ 09/99	46721374	**698198**			
Punto II (99>2003)	+		w/o Plastic Frame	03/01 ▸ 06/03	46723331	**698867**			
Punto II (99>2003)	+			07/99 ▸ 06/03	46770834	**698535**	46723245	**698839**	
Punto II (2003>2005)	+		w/o Plastic Frame	07/03 ▸	46723331	**698867**			
Punto II (2003>2005)	+/-			07/03 ▸	46770834	**698535**	46723245	**698839**	
Punto Evo (2009>)	+/-			10/09 ▸	55702456	**715552**	55702456	**715553**	**▲701003**
Grande Punto	+/-			10/05 ▸	55702456	**715552**	55702456	**715553**	**▲701003**
Qubo	+			10/09 ▸	77364561	**715616**			
Qubo	+			07/10 ▸	55702456	**715552**	77365764	**715553**	**▲701003**
Sedici	+/-			04/06 ▸	71743821	**698886**			
Siena (97>2001) ▸ 0596832	+			11/97 ▸ 02/98	7078711	**698691**			
Siena (97>2001) 0596832 ▸	+			02/98 ▸ 12/01	7079682	**698690**			
Siena (2002>)	+/-			01/02 ▸	7082301	**715615**			
Stilo (2001>2007)	+/-			09/01 ▸ 03/07	46723435	**715686**	46723435	**698692**	
Strada Pick Up	+			03/99 ▸ 03/03	7079682	**698690**			
Strada Pick Up	+/-			04/03 ▸	7082301	**715615**			
Tempra	+			11/89 ▸ 01/96	71712596	**698174**			
Tipo	+			01/88 ▸ 10/95	71712595	**698174**			
Ulysse (94>2002)	+/-		3x	06/94 ▸ 08/02	1475478080, 1475479080	**715530**			
Ulysse (2002>)	+			09/02 ▸	1484383080	**698738**	9655190480	**715558**	**▲701013**
FIAT									
Doblo (2000>2004)	+		w/o Plastic Frame	02/01 ▸ 12/03	46723331	**698867**			
Doblo (2000>2004)	+			10/00 ▸ 12/03	46722862	**698535**	46723245	**698839**	
Doblo (2004>2005)	+			01/04 ▸ 12/05	46722862	**698535**	46723245	**698839**	
Doblo (2004>2005)	+		w/o Plastic Frame	01/04 ▸ 12/05	46723331	**698867**			
Doblo (2006>)	+		w/o Plastic Frame	01/06 ▸	46723331	**698867**	46723245	**698839**	
Doblo (2010>)	+/-			01/10 ▸	77364561	**715616**			
Ducato (94>2001)	+/-			02/94 ▸ 12/01	1312766080	**698858**			
Ducato (2002>)	+			01/02 ▸ 06/06	1312766080	**698858**			
Ducato (2006>)	+/-			07/06 ▸	77364063	**715636**			
Fiorino	+			12/07 ▸	77364561	**715616**			
Fiorino	+			12/07 ▸	55702456	**715552**	77365764	**715553**	**▲701003**
Scudo (95>2003)	+		3x	07/95 ▸ 12/03	1475478080, 1475479080	**715530**			
Scudo (2004>2006)	+			01/04 ▸ 12/06	1484383080	**698738**	1483883080	**715558**	**▲701013**
Scudo II	+/-			01/07 ▸	1497498080	**715614**	1497497080	**715613**	
FORD									
B-Max	+/-			03/12 ▸			1566997	**715661**	
Cougar	+			01/99 ▸ 04/02	1097670	**698168**	1488903	**715674**	
Fiesta (95>2002)	+/-			08/95 ▸ 03/02	1004051	**698201**	1120475	**715617**	
Fiesta (2002>2008)	+/-			03/02 ▸ 09/08	1204459	**698694**	1353269	**698693**	**▲701004**
Fiesta (2008>)	+			11/08 ▸	1541456	**715660**	1566997	**715661**	
Focus (98>2004)	+/-			10/98 ▸ 09/04	1062253	**698487**	1139654	**698695**	**▲701005**
Focus II (2004>2011)	+/-			09/04 ▸ 02/11	1354952	**715510**	1395953	**715511**	**▲701011**
Focus III	+/-			03/11 ▸			1709013	**698883**	

▲ **Soon available P/N** Références disponibles prochainement **Artikel in Kürze lieferbar** Referencias disponibles próximamente **Referências disponiveis próximamente** Riferimenti disponibili nei prossimi mesi **Binnenkort leverbaar** Produkt wkrótce dostępny **Позиции скоро будут доступны** Produkt brzy dostupny **Uskoro u prodaji** Referințele disponibile în curând **Очаквайте скоро** Yakında sunulacak **Κωδικούς σύντομα διαθέσιμα**

	A/C				PA OE	PA Valeo	CA OE	CA Valeo	PCA Valeo
FORD (.../...)									
Focus C-MAX	+/-			06/03 ▸	1315686	**698882**	1315687	**698883**	
Fusion	+/-			06/02 ▸	1204459	**698694**	1353269	**698693**	**▲701004**
Galaxy (95>2000)	+/-			05/95 ▸ 03/00	7420372	**698247**	1113627	**698696**	
Galaxy (2000>2006)	+			04/00 ▸ 03/06	7420372	**698247**	1148366	**698696**	
Galaxy (2006>)	+			04/06 ▸	1315686	**698882**	1315687	**698883**	
Ka	+/-			09/96 ▸ 11/08	1004051	**698201**	1120475	**715617**	
Ka	+/-			12/08 ▸	1557375	**698866**	1673744	**715723**	
Kuga	+			04/08 ▸	1315686	**698882**	1415687	**698883**	
Maverick (93>98)	+			02/93 ▸ 03/98	5029916	**698707**			
Maverick (2000>)	+			12/00 ▸	4416570	**698893**			
Mondeo (93>96)	+/-			01/93 ▸ 08/96	7180932	**698168**			
Mondeo (93>2000)	+			01/93 ▸ 09/00			1488903	**715674**	
Mondeo (96>2000)	+/-			08/96 ▸ 10/00	1097670	**698168**			
Mondeo (2000>2003)	-			10/00 ▸ 05/03	1119613	**698779**			
Mondeo (2000>2003)	A+			10/00 ▸ 05/03			1119616	**698745**	
Mondeo (2000>2003)	M+			10/00 ▸ 05/03	1119613	**698779**	1119616	**698745**	
Mondeo (2003>2005)	+/-			06/03 ▸ 04/05	1119613	**698779**	1119616	**698745**	
Mondeo (2005>2007)	A+			05/05 ▸ 05/07			1119616	**698745**	
Mondeo (2005>2007)	M+			05/05 ▸ 05/07	1119613	**698779**			
Mondeo (2007>)	+/-			06/07 ▸	1315686	**698882**	1315687	**698883**	
Puma	+/-			03/97 ▸	1004051	**698201**	1120475	**715617**	
Ranger	+/-			11/11 ▸	1718237	**•715745**			
S-Max	+			04/06 ▸	1315686	**698882**	1315687	**698883**	
StreetKa	+			11/02 ▸	1004051	**698201**	1120475	**715617**	
Turnier	+/-			01/05 ▸ 04/11	1354952	**715510**	1395953	**715511**	**▲701011**
Turnier	+/-			05/11 ▸	1315686	**698882**			
FORD									
Courrier (96>)	+			10/96 ▸	1004051	**698201**	1120475	**715617**	
Tourneo Connect	+			05/02 ▸	1062253	**698487**	1139654	**698695**	**▲701005**
Transit (2000>)	+/-			01/00 ▸	4042703	**698762**			
Transit (2006>)	-			08/06 ▸	1748480	**•715742**			
Transit Connect	+			05/02 ▸	1062253	**698487**	1139654	**698695**	**▲701005**
HONDA									
Accord VII Coupe (97>)	+		2x	10/97 ▸ 06/02	80291S84A01	**715593**			
Accord VII (98>2003)	+			10/98 ▸ 01/03	79370S1AG01	**715573**			
Accord VIII (2003>)	+/-			02/03 ▸	80292SDCA01	**698868**	80292SFY003	**715678**	
Acura CL	+		2x	02/01 ▸ 12/04	80291S84A01	**715593**			
City	+/-			12/08 ▸	80291TF0E01	**715692**			
Civic V (MA/MB) (95>2001)	-			01/95 ▸ 03/01	79831ST3E01	**698819**			
Civic V (MA/MB) (95>2001)	+			01/95 ▸ 03/01	80290ST3E01	**698869**			
Civic V (EJ/EK) (95>2001)	-			10/95 ▸ 03/01	79831ST3E01	**698819**			
Civic V (EJ/EK) (95>2001)	+			10/95 ▸ 03/01	80290ST3E01	**698869**			
Civic V (EJ*) (96>2000)	-			03/96 ▸ 03/00	79831ST3E01	**698819**			
Civic V (EJ*) (96>2000)	+			03/96 ▸ 03/00	80290ST3E01	**698869**			
Civic Aerodeck (97>)	+			09/97 ▸ 03/01	80291ST3505	**698869**			
Civic (EP) (2001>)	+		2x	04/01 ▸ 12/05	80292S5A003	**698735**			

• **New** Nouveau **Neu** Nuevo **Novo** Nuovo **Nieuw** Nowi **Новый** Novy **Nou** Yeni **Νέους**

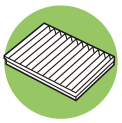

	A/C				PA OE	PA Valeo	CA OE	CA Valeo	PCA Valeo
HONDA									(.../...)
Civic (2006>)	+/-			01/06 ▸	80292SMGE01	**715540**	80292SFY003	**715678**	
Civic (2006>) (Hybrid)	+			05/06 ▸	80292SDCA01	**698868**			
CR-V (97>2002)	+			01/97 ▸ 02/02	80291ST3E01	**698869**			
CR-V (97>2002)	-			01/97 ▸ 02/02	79831ST3E01	**698819**			
CR-V (2002>2006)	+		2x	03/02 ▸ 12/06	80292S5A003	**698735**			
CR-V (2007>)	+/-			01/07 ▸	80292SWWG01	**698868**	80292SFY003	**715678**	
FR-V (2004>)	+		2x	10/04 ▸	80292SCAE11	**698735**			
HR-V	+		2x	10/98 ▸	80291S2HE01	**715594**			
CR-Z (2010>)	+/-			06/10 ▸	80291TF0E01	**715692**			
Insight (2000>)	+			03/00 ▸	80291ST3E01	**698869**			
Insight (2000>)	-			03/00 ▸	79831ST3E01	**698819**			
Insight (2009>)	+/-			02/09 ▸	80291TF0E01	**715692**			
Jazz (2002>2008)	+			01/02 ▸ 09/08	80291SAAE01	**698886**			
Jazz (2008>)	+/-			10/08 ▸	80292TF0G01	**715692**			
Legend	+/-			09/06 ▸	80292SHJA41	**698868**	80292SFY003	**715678**	
Logo	+			12/98 ▸ 04/01	08R79S50600	**715594**			
Ridgeline	+/-			2005 ▸	80292SHJA41	**698868**			
Stream	+		2x	03/01 ▸	80292S5A003	**698735**			
HYUNDAI									
Accent (99>2003)	+			10/99 ▸ 01/03	9761725000	**715516**			
Accent (2003>206)	+			01/03 ▸ 06/06	9761725000	**715516**			
Accent (2006>)	+			07/06 ▸	971331E000	**715592**			
Coupé (2002>)	+			01/02 ▸	971332D000	**715517**			
Elantra (2000>2003)	+			06/00 ▸ 06/03	971332D000	**715517**			
Elantra (2003>)	+			07/03 ▸	971332D200	**715591**			
Genesis	+/-			11/10 ▸	087902E200	**715521**			
Getz	-			09/02 ▸	9999Z07019	**715656**			
Getz	+		2x	09/02 ▸	976171C000	**715525**			
Grandeur	+			11/05 ▸	9761037000	**715516**			
Grandeur Azera	+			04/05 ▸	971332B010	**715541**			
i 10	+			02/08 ▸	9713307010	**715524**			
i 20	+/-			12/08 ▸	971331J000	**715662**			
ix20	+/-			10/10 ▸	971331P000	**•715741**			
i 30	+			08/07 ▸	97133-2L000	**715638**			
i30 cw	+/-			03/12 ▸	971332H001	**715592**			
ix35	+			01/10 ▸	97133-2E250	**•715740**			
i 40	+/-			08/11 ▸	971332E210	**715521**			
ix55 (2008>)	+/-			09/08 ▸	971333J100	**715697**			
Matrix	+			05/01 ▸	971332D000	**715517**			
Santa Fe	+			02/01 ▸ 11/04	9761938100	**698888**			
Santa Fe	+		2x	11/04 ▸ 03/06	976193D100, 976193D200	**715529**			
Santa Fe II	+			03/06 ▸ 01/11	971333K000	**715541**			
Santa Fé CM10	+/-			02/10 ▸	971332B005	**715716**			
Sonata (98>2001)	+			08/98 ▸ 06/01	9761938100	**698888**			
Sonata (2001>2005)	+/-		2x	06/01 ▸ 02/05	976193D100, 976193D200	**715529**			
Sonata (2005>)	+			03/05 ▸	971333K000	**715541**			
Terracan (HP) (2001>)	+			01/01 ▸	97030H1726	**715527**			

▲ **Soon available P/N** Références disponibles prochainement **Artikel in Kürze lieferbar** Referencias disponibles próximamente **Referências disponiveis próximamente** Riferimenti disponibili nei prossimi mesi **Binnenkort leverbaar** Produkt wkrótce dostępny **Позиции скоро будут доступны** Produkt brzy dostupny **Uskoro u prodaji** Referințele disponibile în curând **Очаквайте скоро** Yakında sunulacak **Κωδικούς σύντομα διαθέσιμα**

	A/C				PA OE	PA Valeo	CA OE	CA Valeo	PCA Valeo
HYUNDAI (.../...)									
Trajet (2000>)	+			01/00 ▸ 04/03	9761938100	**698888**			
Trajet (2000>)	+/-		2x	04/03 ▸	976193D100, 976193D200	**715529**			
Tucson	+			07/04 ▸	971332E200	**715521**			
Tucson	+		2x	08/04 ▸	971332E900	**715639**			
Tucson	+			07/04 ▸	971332E250	**•715740**			
Veloster	+/-			07/11 ▸	976174H900	**715521**			
XG (99>2002)	+			01/99 ▸ 08/02	9761938100	**698888**			
XG (2002>)	+			09/02 ▸ 03/03	9761938100	**698888**			
XG (2002>)	+		2x	03/03 ▸	976193D100, 976193D200	**715529**			
HYUNDAI									
H1 Starex	+		2x	02/08 ▸	976174H000	**715669**			
H1 (2000>2006)	+/-			02/00 ▸ 10/06	974064A900	**•715738**			
H1 Mini Bus (2001>2006)	+/-			10/01 ▸ 09/06	974064A900	**•715738**			
Highway Van	+			03/00 ▸ 04/03	9761938100	**698888**			
Highway Van	+			04/03 ▸ 02/04	976193D000	**715529**			
iLoad	+/-		2x	02/08 ▸	976174H000	**715669**			
i800	+/-		2x	02/08 ▸	976174H000	**715669**			
INFINITI									
FX 35 /45	+			01/03 ▸	B727A79925	**715631**	27277Z5000	**715560**	
G20	+		2x	01/97 ▸	272747J125	**715561**			
G35	+			05/02 ▸	B727A79925	**715631**	27277Z5000	**715560**	
I30	+		2x	03/00 ▸ 09/04			B72003Y000	**698873**	
I35	+		2x	03/00 ▸ 09/04			B72003Y000	**698873**	
QX4	+		2x	01/97 ▸	272747J125	**715561**			
IRISBUS									
Agora	+			02/96 ▸ 03/06	5006175605	**716062**			
Agora	+		Webasto	01/02 ▸	1100372A	**716049**			
Ares	+		Webasto	05/02 ▸	1100372A	**716049**			
Arway	+		Webasto	12/05 ▸	1101193	**716049**			
Axer	+		Webasto	03/05 ▸ 01/07	1100372A	**716049**			
Citelis	+		Webasto	04/05 ▸	1100372A	**716049**			
Citelis/ B	+			04/05 ▸	5006175605	**716062**			
City Bus	+			09/03 ▸	5006175605	**716062**			
City Class	+		Webasto	02/00 ▸	1101193A	**716049**			
City Class	+			01/02 ▸	5006175605	**716062**			
Daily Citis	+/-			09/06 ▸			2994769	**▲716063**	
Evadys	+		Webasto	09/04 ▸	1100372A	**716049**			
Liliade H	+		Webasto	05/02 ▸	1100372A	**716049**			
Midi GX	+		Webasto	09/04 ▸	1100372A	**716049**			
Midys	+		Webasto	09/04 ▸	1101193A	**716049**			
Moovy	+		Webasto	09/04 ▸	1100372A	**716049**			
Recreo	+/-			09/06 ▸			2994769	**▲716063**	
Tourys	+/-			09/06 ▸			2994769	**▲716063**	
Way	+/-			09/06 ▸			2994769	**▲716063**	

• **New** Nouveau **Neu** Nuevo **Novo** Nuovo **Nieuw** Nowi **Новый** Novy **Nou** Yeni **Νέους**

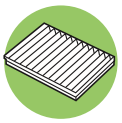

	A/C				PA OE	PA Valeo	CA OE	CA Valeo	PCA Valeo
ISUZU									
D-Max	+/-			01/03 ▸ 12/06	8980084420	**715718**			
Trooper (2000>)	+		2x	04/00 ▸	8971708040	**715569**			
ISUZU									
Rodeo	+/-			01/04 ▸ 12/04	8980084420	**715718**			
IVECO									
Campagnola	+/-			12/08 ▸			2994769	**▲716063**	
Daily (99>2006)	+			05/99 ▸ 03/06	500314688	**698197**	93162491	**698687**	
Daily (2006>)	+/-			04/06 ▸	3802821	**715595**	2994769	**▲716063**	
Massif	+/-			03/08 ▸	3802821	**715595**	2994769	**▲716063**	
Rapido	+/-			02/07 ▸			2994769	**▲716063**	
IVECO BUS									
Civis	+		Webasto	05/01 ▸	93350A	**716049**			
Euroclass	+		Webasto	09/02 ▸	93350A	**716049**			
Euro Rider	+		Webasto	09/02 ▸	93350A	**716049**			
IVECO									
Euromover	+			04/05 ▸	504024890	**716028**	2994583	**716029**	
Eurostar	+/-			04/92 ▸	500387947	**716033**			
Eurotech	+/-			04/92 ▸	500387947	**716033**			
Eurotrakker	+/-			01/93 ▸	500387947	**716033**			
Stralis	+			02/02 ▸	504024890	**716028**	2994583	**716029**	
Trakker	+			09/04 ▸	504024890	**716028**	2994583	**716029**	
JAGUAR									
Sovereign	-			10/02 ▸			C2C6884	**715504**	
S-Type (98>2003)	+			10/98 ▸ 12/03			XR830254	**715505**	
S-Type (2004>)	+			01/04 ▸			XR830254	**715505**	
XF	+			03/08 ▸			C2Z6525	**715681**	
XJ (2002>2009)	+			10/02 ▸ 12/09			C2C6884	**715504**	
XJ (2010>)	+/-			01/10 ▸			C2Z6525	**715681**	
XJR (2002>2009)	+			10/02 ▸ 12/09			C2C6884	**715504**	
XJR (2010>)	+/-			01/10 ▸			MF145570-0380	**715681**	
Xk	+		2x	03/06 ▸			C2P2410	**715640**	
X-Type	M+			02/01 ▸	C2S8619	**698779**			
X-Type	A+			02/01 ▸			C2S8622	**698745**	
JEEP									
Cherokee II	+			09/01 ▸ 07/05	05013595AB	**715670**			
Cherokee III	+			08/05 ▸ 02/08	05013595AA	**715670**			
Cherokee IV	+/-			03/08 ▸	68033193AA	**715696**			
Compass	+			09/06 ▸	5058693AA	**•715735**	5058381AA	**715537**	
Grand Cherokee II	+			04/99 ▸ 05/05	82204691	**715670**			
Grand Cherokee III	+			06/05 ▸	82208300	**715670**			

▲ Soon available P/N Références disponibles prochainement **Artikel in Kürze lieferbar** Referencias disponibles próximamente **Referências disponiveis próximamente** Riferimenti disponibili nei prossimi mesi **Binnenkort leverbaar** Produkt wkrótce dostępny **Позиции скоро будут доступны** Produkt brzy dostupny **Uskoro u prodaji** Referințele disponibile în curând **Очаквайте скоро** Yakında sunulacak **Κωδικούς σύντομα διαθέσιμα**

	A/C				PA OE	PA Valeo	CA OE	CA Valeo	PCA Valeo
JEEP (.../...)									
Grand Cherokee (2010>)	+/-			09/10 ▸	68079487AA	**715717**			
Liberty	+/-			03/08 ▸	68033193AA	**715696**			
Patriot	+			09/06 ▸	5058693AA	**•715735**	5058381AA	**715537**	
KIA									
Amanti (USA)	+			09/03 ▸	971143B100	**698889**			
Carens II (2002>2006)	+		2x	07/02 ▸ 09/06	0K2FA6152X	**715522**			
Carens III (2006>)	+			09/06 ▸	971332E200	**715521**			
Carnival (2006>)	+			06/06 ▸	971332F000	**698895**			
Cee'd	+			01/07 ▸	971331H000	**715638**			
Cerato	+			01/04 ▸	971332F000	**698895**			
Clarus	+		2x	05/95 ▸ 07/01	0K9A46152XA	**715523**			
Elan	+		2x	01/99 ▸	0K2FA6152X	**715522**			
Magentis	+			02/01 ▸ 12/05	9761938100	**698888**			
Magentis II	+			01/06 ▸	971333K000	**715541**			
Opirus	+			04/03 ▸ 10/06	971143B100	**698889**			
Optima (2001>)	+			02/01 ▸ 11/05	9761938100	**698888**			
Optima (2005>)	+			11/05 ▸	971333K000	**715541**			
Picanto	+			01/04 ▸	9713307000	**715524**			
Rio (2001>2005)	+		2x	07/00 ▸ 05/05	97619FD200	**715523**			
Rio (2005>)	+			06/05 ▸	971332E200	**715521**			
Sedona (2006>)	+			06/06 ▸	971332F000	**698895**			
Sephia II	+/-		2x	10/97 ▸ 05/01	0K2N16152X	**715618**			
Shuma I	+/-		2x	10/97 ▸ 05/01	0K2N16152X	**715618**			
Shuma II	+/-		2x	05/01 ▸ 05/04	0K2N16152X	**715618**			
Sorento	+			04/02 ▸ 04/06	9761938100	**698888**			
Sorento (JC)	+		2x	04/06 ▸	971332E910	**715639**			
Sorento (2009>)	+			05/09 ▸	971332F010	**698895**			
Soul	+			10/08 ▸	971332K000	**715691**			
Spectra (USA)	+/-		2x	05/01 ▸ 05/04	0K9A56152XA	**715618**			
Spectra New (USA)	+			05/04 ▸	971332F000	**698895**			
Sportage I	+		2x	04/94 ▸ 09/04	0K9A56152XA	**715618**			
Sportage II	+			10/04 ▸ 07/10	971332E200	**715521**			
Sportage III	+			08/10 ▸	971330Z000	**•715740**			
Venga (2010>)	+/-			02/10 ▸	971331P000	**•715741**			
LADA									
110	-			01/95 ▸			211812202010	**715682**	
111	-			01/95 ▸			211812202010	**715682**	
112	-			01/95 ▸			211812202010	**715682**	
Kalina 1118	+/-			03/05 ▸	111808122010	**•715739**			
Kalina 1119	+/-			03/05 ▸	111808122010	**•715739**			
LAMBORGHINI									
Gallardo	+		2x	08/03 ▸	4F0819439	**715500**	4F0819439A	**715501**	
LANCIA									
Dedra	+			03/89 ▸ 02/98	71712596	**698174**			

• **New** Nouveau **Neu** Nuevo **Novo** Nuovo **Nieuw** Nowi **Новый** Novy **Nou** Yeni **Νέους**

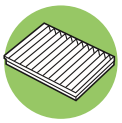

	A/C				PA OE	PA Valeo	CA OE	CA Valeo	PCA Valeo
LANCIA									(.../...)
Dedra	+			02/98 ▸ 09/99	46442422	**698197**	60815647	**698687**	
Delta	+			03/93 ▸ 08/99	71712596	**698174**			
Delta	+/-			06/08 ▸	71736776	**715686**			
Flavia	+/-			06/12 ▸	K05058693AA	**•715735**	K05058381AA	**715537**	
Kappa	+			07/96 ▸ 10/00			60814643	**698688**	
Lybra	+			09/99 ▸	60653641	**698197**	60815647	**698687**	
Musa	+/-		w/o Plastic Frame	07/04 ▸ 03/11	46723331	**698867**			
Musa	+/-		w/o Plastic Frame	04/11 ▸	46723331	**698867**			
Phedra	+			09/02 ▸	1484383080	**698738**	9655190480	**715558**	**▲701013**
Thema	+			10/88 ▸ 11/94	82398550	**698199**			
Thesis	+			09/02 ▸			46723024	**698751**	
Y (95>2000)	+			11/95 ▸ 08/00	46721374	**698198**			
Y (2000>2003)	+		w/o Plastic Frame	09/00 ▸ 09/03	46723331	**698867**			
Ypsilon (2003>2011)	+		w/o Plastic Frame	10/03 ▸ 04/11	46723331	**698867**			
Zeta	+		3x	10/94 ▸ 08/02	1475478080, 1475479080	**715530**			
LAND ROVER									
Discovery	M+			11/04 ▸	JKR500010	**715518**			
Discovery	A+			11/04 ▸			JKR500020	**715519**	
Freelander ▸ YA999999	+			10/97 ▸ 12/00	JKR100200	**698799**			
Freelander 1AA000001 ▸	+/-			01/01 ▸	JKR100280	**698817**			
Freelander	A+			10/06 ▸	LR000899	**715597**	LR000901	**715702**	
Range Rover (94>2002)	+/-		2x	09/94 ▸ 02/02	BTR8037	**715598**			
Range Rover (2002>2010)	+			03/02 ▸ 05/10		**698775**	JMO000010	**698776**	
Range Rover (2010>)	+			06/10 ▸			JMO000010	**698776**	
Range Rover Evoque	+			03/11 ▸	LR019192	**715597**	LR019589	**715702**	
Range Rover Sport	+			05/05 ▸	JKR500010	**715518**	JKR500020	**715519**	
LEXUS									
CT 200h (2010>)	+			12/10 ▸	87139YZZ08	**715620**	8713950060	**•715730**	**▲701021**
GS (97>2000)	+			08/97 ▸ 07/00	8713930010	**715542**	8850530100	**•715729**	
GS (2000>2005)	+			07/00 ▸ 01/05			8713950030	**715641**	
GS (2005>)	+			04/05 ▸	8713930040	**715620**	8713950060	**•715730**	**▲701021**
GX 460	+			11/09 ▸	87139YZZ08	**715620**	8713950060	**•715730**	**▲701021**
IS (99>2005)	+			04/99 ▸ 11/05	8713948020	**715542**	8850530100	**•715729**	
IS (2005>)	+			12/05 ▸	8713930040	**715620**	8713950060	**•715730**	**▲701021**
LFA	+			12/10 ▸	87139YZZ08	**715620**	8713950060	**•715730**	**▲701021**
LS (94>2000)	+			10/94 ▸ 10/00	8713930010	**715542**	8850530100	**•715729**	
LS (2000>2006)	+			10/00 ▸ 09/06			8713950030	**715641**	
LS 460 (2006>)	+/-			08/06 ▸	87139YZZ08	**715620**	8713950060	**•715730**	**▲701021**
LX 570	+			11/07 ▸	87139YZZ08	**715620**	8713950060	**•715730**	**▲701021**
RX (97>2003)	+			08/97 ▸ 05/03	8713948020	**715542**	8850530100	**•715729**	
RX 300	+			06/03 ▸			8713933010	**715619**	
RX 350	+			06/03 ▸			8713933010	**715619**	
RX 400	+			06/03 ▸			8713933010	**715619**	
RX350/450H	+			03/09 ▸	87139YZZ08	**715620**	8713950060	**•715730**	**▲701021**

▲ Soon available P/N Références disponibles prochainement **Artikel in Kürze lieferbar** Referencias disponibles próximamente **Referências disponiveis próximamente** Riferimenti disponibili nei prossimi mesi **Binnenkort leverbaar** Produkt wkrótce dostępny **Позиции скоро будут доступны** Produkt brzy dostupny **Uskoro u prodaji** Referințele disponibile în curând **Очаквайте скоро** Yakında sunulacak **Κωδικούς σύντομα διαθέσιμα**

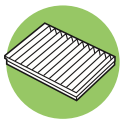

Filtre à air d'habitacle
Cabin air filter
Innenraumluftfilter

Filtro habitaculo
Filtro de habitáculo
Filtro abitacolo

Interieur luchtfilter
Filtr kabinowy
Воздушный Фильтр Салона

Kabinový filtr
Filtru aer de habitaclu
Филтър купе
Filter kabine

Kabin filtresi
Φίλτρο Καμπίνας

Valeo

	A/C				PA OE	PA Valeo	CA OE	CA Valeo	PCA Valeo
LEXUS (.../...)									
SC 430	+			08/01 ▸			8713950030	**715641**	
LDV									
Maxus	+			07/05 ▸	589150001	**715655**	573228900	**698688**	
MAN (BUS)									
Lion's	+		Webasto	09/96 ▸	81779100016	**716049**			
Lion's City G/GL/GLX			Konvecta	02/01 ▸	83779720656	**▲716064**			
Lion's City LL (NL-Serie)			Konvecta	01//99 ▸	83779720656	**▲716064**			
Lion's City M (NM-Serie)			Konvecta	11/05 ▸	83779720656	**▲716064**			
Lion's City UELL			Konvecta	07/98 ▸	83779720656	**▲716064**			
Lions Coach	+/-		Konvecta	06/02 ▸	88779100002	**716048**			
Lions Coach	+		Webasto	07/06 ▸	18357047	**716046**			
Lions Coach	+/-			01/98 ▸ 12/01	81619100011	**716034**			
Lions Comfort	+/-			01/98 ▸ 12/01	81619100011	**716034**			
Lions Regio	+/-			2004 ▸	81619100018	**716036**			
Lions Regio	+/-			2004 ▸			81619100019	**716037**	
Lions Series	+/-		Recir.air	04/00 ▸	88779100003	**716047**			
Lions Series	+			09/02 ▸	0018355547	**716056**			
NG	+/-			07/98 ▸	81779100012	**716057**			
NG	+/-		Konvecta	02/01 ▸	83779720656	**▲716064**			
NL	+/-			12/95 ▸	81779720155	**716057**			
NL	+/-		Konvecta	01/99 ▸	83779720656	**▲716064**			
NM	+/-		Konvecta	11/05 ▸	83779720656	**▲716064**			
NUE	+/-			02/98 ▸	81779100012	**716057**			
NUE	+/-		Konvecta	02/98 ▸	83779720656	**▲716064**			
UEL-313	+/-			09/96 ▸ 09/01	81619100011	**716034**			
UEL-353	+/-			06/97 ▸ 12/01	81619100011	**716034**			
MAN TRUCKS									
F2000, F2000 Evolution	+/-			01/94 ▸	81619100011	**716034**			
FE Serie	+/-			08/95 ▸	81619100011	**716034**			
L2000, L2000 Evolution	+/-			05/94 ▸	85619500025	**716035**			
LE Serie (250-280)	+/-			08/88 ▸ 12/98	81619100011	**716034**			
LE Serie (110-220)	+/-			08/00 ▸	85619500025	**716035**			
M2000, M2000 Evolution	+/-			05/94 ▸	85619500025	**716035**			
M2000, M2000 Evolution	+/-			08/95 ▸	81619100011	**716034**			
ME Serie	+/-			08/00 ▸	81619100011	**716034**			
TGA	+/-			03/00 ▸	81619100018	**716036**	81619100019	**716037**	
TGL	+/-			06/05 ▸	81619100018	**716036**	81619100019	**716037**	
TGM	+/-			11/05 ▸	81619100018	**716036**	81619100019	**716037**	
MASERATI									
3200GT	+			10/98 ▸ 03/02			573228900	**698688**	
Coupe/ Spider 4200	+			10/01 ▸			2108301118	**698772**	
MAYBACH									
57/62 (240)	A+		2x / 100% Act. carbon	09/02 ▸			2108301118	**698772**	

• **New** Nouveau **Neu** Nuevo **Novo** Nuovo **Nieuw** Nowi **Новый** Novy **Nou** Yeni **Νέους**

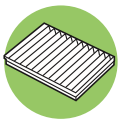

	A/C				OE	PA Valeo	OE	CA Valeo	PCA Valeo
MAYBACH (.../...)									
57/62 (240)	A+		2x	09/02 ▸	2108300018	**715531**			
MAZDA									
2 (2003>2007)	+/-			03/03 ▸ 09/07	GJ6A61P11A	**698870**	GJ6B61P11	**715679**	
2 (2007>2010)	+/-		2x	10/07 ▸ 07/10	D65161J6X	**715642**			
2 (2010>)	+/-		2x	08/10 ▸	D65161J6X	**715642**			
3 (2003>2008)	+		2x	06/03 ▸ 11/08	BP4K61J6X	**698892**			
3 (2008>)	+/-		2x	12/08 ▸	BBP261J6X	**•715726**			
5 (2005>2010)	+		2x	04/05 ▸ 05/10	CC2961J6X	**698892**			
5 (2010>)	+		2x	06/10 ▸	CC6461J6X	**698892**			
6 (2002>2010)	+/-			06/02 ▸ 04/10	GJ6A61P11A	**698870**	GJ6B61P11	**715679**	
6 (2010>)	+/-			05/10 ▸	GS1D61P11	**698870**			
121 (JA/JB) (96>)	+/-			03/96 ▸	1E0061J6X	**698201**	410077732	**715617**	
323 (BA)	+		3x	08/94 ▸ 09/98	BC5D61J6X	**715664**			
323 (BJ) (98>2000)	-			08/98 ▸ 09/00	GE7B61J6XA	**715599**			
323 (BJ) (98>2000)	+		2x	08/98 ▸ 09/00	GE6T61J6X	**698891**	CB1261J6X	**698890**	
323 (BJ) (2000>2003)	-			10/00 ▸ 10/03	GE7B61J6XA	**715599**			
323 (BJ) (2000>2003)	+		2x	10/00 ▸ 10/03	GE6T61J6X	**698891**	CB1261J6X	**698890**	
626 (GF) (99>2002)	+		2x	10/99 ▸ 05/02	GE6T61J6X	**698891**	CB1261J6X	**698890**	
626 (GF) (99>2002)	-			10/99 ▸ 05/02	GE7B61J6XA	**715599**			
626 (GW) (97>99)	+		2x	11/97 ▸ 09/99	GE6T61J6X	**698891**			
626 (GW) (99>2002)	-			10/99 ▸ 05/02	GE7B61J6XA	**715599**			
BT-50 II	+/-			11/11 ▸	UCY061P11	**•715745**			
CX7	+/-			01/07 ▸	GJ6A61P11A	**698870**	GJ6B61P11	**715679**	
Demio	+		2x	05/98 ▸ 03/03	DC2161J6X	**715576**			
MPV	+/-		2x	09/99 ▸	LDY461J6X	**715574**	LDY361J6X	**•715728**	
Premacy (99>2001)	+		2x	06/99 ▸ 06/01	GE6T61J6X	**698891**	CB1261J6X	**698890**	
Premacy (99>2001)	-			07/99 ▸	GE7B61J6XA	**715599**			
Premacy (2001>)	+		2x	07/01 ▸	GE6T61J6X	**698891**	CB1261J6X	**698890**	
RX-8	+		2x	02/03 ▸	LDY461J6X	**715574**	LDY361J6X	**•715728**	
Tribute (2000>)	+			01/00 ▸	EC1361J6XA	**698893**			
Xedos 6 (CA)	+		2x	08/93 ▸ 01/00	TA0561J6X	**715657**			
Xedos 9 (TA)	+		2x	08/93 ▸ 01/00	TA0561J6X	**715657**			
MERCEDES									
A Class (168) (97>)	+/-			05/97 ▸ 06/04	1688300018	**698475**	1688300818	**698744**	
A Class (169) (2004>)	+/-			07/04 ▸	1698300118	**715506**	1698300218	**715507**	
A Class (169) (2004>)	A+			07/04 ▸			1698300218	**715507**	
B Class (245)	+/-			03/05 ▸	1698300118	**715506**	1698300218	**715507**	
B Class (245)	A+			03/05 ▸			1698300218	**715507**	
C Class (202)	+/-			03/93 ▸ 02/01	2028300018	**698169**	2108300818	**698697**	
C Class (202)	+/-			03/93 ▸ 02/01	2028300318	**698169**	2108300818	**698697**	
C Class (203)	+/-		2x / 100% Act. Carbon	04/00 ▸			2038300518	**698742**	
C Class (203)	+/-			04/00 ▸	2038300118	**698700**	2038300918	**698743**	
C Class (203)	+/-			04/00 ▸	2038300218	**698701**			
C Class (204)	+/-			04/07 ▸ 12/10			2048300018	**715600**	
CL Class (215)	A+		2x / 100% Act. Carbon	08/99 ▸	2108301018	**715531**	2108301118	**698772**	
CL Class (216) (2006>)	+		2x	05/06 ▸			2218300018	**715643**	

▲ **Soon available P/N** Références disponibles prochainement **Artikel in Kürze lieferbar** Referencias disponibles próximamente **Referências disponiveis próximamente** Riferimenti disponibili nei prossimi mesi **Binnenkort leverbaar** Produkt wkrótce dostępny **Позиции скоро будут доступны** Produkt brzy dostupny **Uskoro u prodaji** Referințele disponibile în curând **Очаквайте скоро** Yakında sunulacak **Κωδικούς σύντομα διαθέσιμα**

	A/C				PA OE	PA Valeo	CA OE	CA Valeo	PCA Valeo
MERCEDES (.../...)									
CLC (203) (2008>)	+/-			03/08 ▸			2038300918	**698743**	
CLC (203) (2008>)	A+		2x	03/08 ▸			2038302118	**698742**	
CLK (208)	+/-			06/97 ▸ 02/02	2028300018	**698169**	2108300818	**698697**	
CLK (208)	+			06/97 ▸ 02/02	2028300318	**698169**	2108300818	**698697**	
CLK (209)	+			03/02 ▸	2038300118	**698700**	2038300918	**698743**	
CLK (209)	A+			03/02 ▸	2038300218	**698701**			
CLS (219)	+			07/04 ▸	2118300218	**698702**	2118300018	**698741**	
CLS (219)	A+		2x / 100% Act. Carbon	07/04 ▸			2118300818	**698740**	
E Class (124)	+/-			07/93 ▸ 02/96	1248350047	**715684**			
E Class (210)	+/-			04/95 ▸ 03/03	2028300018	**698169**	2108300818	**698697**	
E Class (210)	+/-			04/95 ▸ 03/03	2028300318	**698169**	2108300818	**698697**	
E Class (210)	A+		2x / 100% Act. Carbon	04/95 ▸ 03/03			2108301118	**698772**	
E Class (210)	A+		2x	04/95 ▸ 03/03	2108300018	**715531**			
E Class (210)	A+		2x	04/95 ▸ 03/03	2108301018	**715531**			
E Class (211)	+/-			03/02 ▸	2118300218	**698702**	2118300018	**698741**	
E Class (211)	A+		2x / 100% Act. Carbon	03/02 ▸			2118300818	**698740**	
E Class (211)	M+			03/02 ▸	2118300218	**698702**			
E Class (212)	+/-			03/09 ▸			2128300018	**715600**	
G Class (W461/463)	+			03/98 ▸			4638300018	**698739**	**▲701009**
GL Class (164)	+		2x	01/06 ▸			1648300218	**715544**	
GLK	+/-			07/08 ▸			2128300018	**715600**	
M Class (163)	+/-			05/97 ▸	1638350247	**698777**			
M Class (163)	A+			03/98 ▸	1638350247	**698777**	1638350047	**698778**	
M Class (164)	+		2x	07/05 ▸			1648300218	**715544**	
ML (164) (2008>)	+		2x	04/08 ▸			1648300218	**715544**	
R Class (251)	+		2x	10/05 ▸			1648300218	**715544**	
S Class (124)	+			12/84 ▸ 06/93	1248300118	**698704**			
S Class (140)	+			03/91 ▸ 07/99	1408350047	**698704**	1408350147	**698703**	
S Class (140)	+		PREFILTER	03/91 ▸ 07/99		**698797**			
S Class (140)	A+			03/91 ▸ 07/99	1408350547	**698706**	1408350447	**698705**	
S Class (220)	+			09/98 ▸ 08/05	2108300018	**698169**			
S Class (220)	A+		2x / 100% Act. Carbon	09/98 ▸ 08/05			2108301118	**698772**	
S Class (220)	A+		2x	09/98 ▸	2108300018	**715531**			
S Class (221)	+		2x	09/05 ▸			2218300018	**715643**	
SL (R230)	+		2x	10/01 ▸			2308300418	**715621**	
SLK (R170)	+/-			08/96 ▸ 12/03	2028300018	**698169**	2108300818	**698697**	
SLK (R170)	+/-			08/96 ▸ 12/03	2028300318	**698169**	2108300818	**698697**	
SLK (R171)	+			01/04 ▸			1718300418	**715508**	
SLR (R199)	+		2x	04/04 ▸			2308300418	**715621**	
SLS (C197)	+/-			03/10 ▸			2128300218	**715600**	
Vaneo (414)	+/-			10/01 ▸	1688300018	**698475**	1688300818	**698744**	
V Class (638)	+			10/96 ▸ 12/02	0018353047	**715577**			
MERCEDES									
Sprinter I	+/-			02/95 ▸ 05/06	9018300018	**698840**	9018300418	**716023**	
Sprinter II	A+			04/06 ▸			9068300318	**715602**	
Sprinter II	M+			04/06 ▸	9068300218	**715601**			
Viano	A+			09/03 ▸			6398350347	**698872**	

• **New** Nouveau **Neu** Nuevo **Novo** Nuovo **Nieuw** Nowi **Новый** Novy **Nou** Yeni **Νέους**

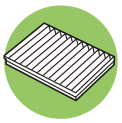

	A/C				PA OE	PA Valeo	CA OE	CA Valeo	PCA Valeo
MERCEDES (.../...)									
Viano	M+			01/03 ▸	6398350247	**698871**			
Viano	+/-			09/03 ▸	6398350247	**698871**	6398350347	**698872**	
Vito (638)	+/-			11/95 ▸ 09/03	6388350047	**715577**			
Vito (639)	A+			09/03 ▸			6398350347	**698872**	
Vito (639)	M+			01/03 ▸	6398350247	**698871**			
Vito (639)	+/-			09/03 ▸	6398350247	**698871**	6398350347	**698872**	
MERCEDES (EVOBUS/SETRA)									
CapaCity (O 530GL/628)			Konvecta	04/07 ▸	0018359247	**▲716064**			
Citaro K (628)	+		Webasto	09/06 ▸	6278350447	**716049**			
Citaro LE	+		Webasto	11/05 ▸	20401236	**716049**			
Comfort Class 400S	+		4x	10/03 ▸	0018357147	**716058**			
Citaro O530	-		Konvecta	03/98 ▸	0018359247	**▲716064**			
Integro (633)	-		Konvecta	03/06 ▸	0018359247	**▲716064**			
Intercity (634)			Konvecta	09/08 ▸	0018359247	**▲716064**			
Intouro II (633)			Konvecta	03/07 ▸	0018359247	**▲716064**			
O 345	+			03/98 ▸	0018355547	**716056**			
O 350	+			03/98 ▸	0018355547	**716056**			
O 345 - Conecto	+		Webasto	01/03 ▸	0018255447	**716049**			
O 530 - Citaro	+		Webasto	01/98 ▸	0018255447	**716049**			
O 530 - Citaro	+		Konvecta	03/98 ▸	H14002499	**716048**			
O 530 - Citaro	+		Konvecta	03/98 ▸	0018351547	**716050**			
O 530 - Citaro	+			03/98 ▸	0018359147	**716060**			
O 550 - Integro	+		Webasto	03/06 ▸	0018357047	**716046**			
O 550 - Integro M	+		Webasto	09/02 ▸ 03/06	0018357047	**716046**			
O 580 - Travego	+		Webasto	11/99 ▸ 01/06	0018255447	**716049**			
O 580 - Travego	+		4x	11/99 ▸	0018357147	**716058**			
S400 Serie	+		Webasto	09/01 ▸	0018357047	**716046**			
Setra S400			Konvecta	10/03 ▸	0018359247	**▲716064**			
Setra S400	+		Webasto	09/06 ▸	0018255447	**716049**			
Setra S400 Top Class	+		3x	06/02 ▸	0018356147	**716059**			
Setra S400 Top Class	+		2x	06/02 ▸	0018356247	**716061**			
Tourismo II/M	-		Konvecta	09/06 ▸	0018359247	**▲716064**			
Travego (O 580)	-		Konvecta	11/99 ▸ 12/06	0018359247	**▲716064**			
MERCEDES TRUCKS									
Actros	+/-		prefilter	09/96 ▸	0018350747	**716017**			
Actros	+/-		Road	09/96 ▸	0008301118	**716010**	0008301318	**716012**	
Actros	+		Construction	09/96 ▸	0008301218	**716011**			
Actros	A+			09/96 ▸			0008301518	**716013**	
Actros II	+/-			09/11 ▸	9608300018	**•716066**	9608300118	**•716065**	
Atego I	+/-		Construction	01/98 ▸ 09/04	9738350247	**716021**			
Atego I	+/-			01/98 ▸ 09/04	9738350147	**716014**	9738350347	**716015**	
Atego II	+/-		Construction	09/04 ▸	9738350247	**716021**			
Atego II	+/-			09/04 ▸	9738350147	**716014**	9738350347	**716015**	
Axor	+/-			10/01 ▸	9408350047	**716019**	9408350147	**716020**	
Axor I	+/-		Construction	01/02 ▸ 09/04	9408350247	**716018**			
Axor II	+/-			09/04 ▸	9408350047	**716019**	9408350147	**716020**	

▲ **Soon available P/N** Références disponibles prochainement **Artikel in Kürze lieferbar** Referencias disponibles próximamente **Referências disponiveis próximamente** Riferimenti disponibili nei prossimi mesi **Binnenkort leverbaar** Produkt wkrótce dostępny **Позиции скоро будут доступны** Produkt brzy dostupny **Uskoro u prodaji** Referințele disponibile în curând **Очаквайте скоро** Yakında sunulacak **Κωδικούς σύντομα διαθέσιμα**

	A/C				PA OE	PA Valeo	CA OE	CA Valeo	PCA Valeo
MERCEDES TRUCKS (.../...)									
Axor II	+/-		Construction	09/04 ▸	9408350247	**716018**			
Econic (957)	+/-			07/98 ▸	9408350047	**716019**	9408350147	**716020**	
MK Serie	+/-			12/87 ▸ 09/96	0008356947	**716016**			
SK Serie	+/-			07/87 ▸ 09/96	0008356947	**716016**			
MG									
MG ZR	+			06/01 ▸	JKR100020	**698196**			
MG ZS	-			07/01 ▸	JKR100220	**698819**			
MG ZS	+			07/01 ▸	JKR100020	**698196**			
MG ZT	+			06/01 ▸	JKR100183	**698879**	JKR000040	**698880**	
MINI									
Mini	+/-			09/01 ▸	64311496710	**698724**	64311496711	**698725**	
Mini (2006>)	A+			11/06 ▸	64319127516	**715585**	64319127515	**715586**	
Mini 2 LCI (R56/57) (2009>)	+/-			03/09 ▸	64319127516	**715585**	64319127515	**715586**	
Mini 2 LCI (R56/57) (2009>)	+/-			03/09 ▸	64319127516	**715585**	64319127515	**715586**	
Mini Coupé (2011>)	+/-			09/11 ▸	64319127516	**715585**	64319127515	**715586**	
Mini LCI Clubman (R55) (2009>)	+/-			03/09 ▸	64319127516	**715585**	64319127515	**715586**	
Mini LCI Clubman (R55) (2009>)	+/-			03/09 ▸	64319127516	**715585**	64319127515	**715586**	
Mini Countryman (2010>)	+/-			08/10 ▸	64319127516	**715585**	64319127515	**715586**	
MINI Roadster (R59)	+/-			03/12 ▸	64319127516	**715585**	64319127515	**715586**	
MITSUBISHI									
Airtrek I	+			06/01 ▸ 06/05			MR398288	**715546**	
Airtrek II	+/-			06/05 ▸	7803A004	**715631**	7803A005	**715623**	
ASX	+/-			04/10 ▸	7803A004	**715631**	7803A005	**715623**	
Carisma	-			07/95 ▸ 08/00	MZ311916	**715688**			
Carisma	+		2x	09/00 ▸	MZ311917	**715548**			
Colt V (CJ)	+			05/96 ▸ 07/04	MR227823	**715543**			
Colt VI (2004>)	+			05/04 ▸	MR958016	**715603**	MR958017	**698802**	
Galant (92>96)	+			11/92 ▸ 09/96			MR958017	**698802**	
Galant (1996>)	+			09/96 ▸	MR315876	**715528**			
Grandis	+			04/04 ▸			MR398288	**715546**	
Lancer VI (CK1)	+			12/95 ▸ 08/03	MR227823	**715543**			
Lancer VII (GS)	+			09/03 ▸			MR398288	**715546**	
Lancer VIII	+/-			10/07 ▸	7803A004	**715631**	7803A043	**715623**	
Lancer IX	+/-						7803A005	**715623**	
L200	+			01/00 ▸ 04/06	MR227823	**715543**			
Montero II	+			12/90 ▸ 04/00			MR500058	**715509**	
Montero III	+			04/02 ▸ 02/07			MR500058	**715509**	
Montero IV	+			02/07 ▸			7803A028	**715509**	
Outlander I	+			05/03 ▸ 02/07			MR398288	**715546**	
Outlander II	+/-			03/07 ▸	7803A004	**715631**	7803A005	**715623**	
Pajero II	+			12/90 ▸ 02/00			MR500058	**715509**	
Pajero III (2000>)	+			02/00 ▸ 02/07			MR500058	**715509**	
Pajero III (2000>)	+			02/00 ▸			7803A027	**715622**	
Pajero IV	+			02/07 ▸			7803A028	**715509**	

• **New** Nouveau **Neu** Nuevo **Novo** Nuovo **Nieuw** Nowi **Новый** Nový **Nou** Yeni **Νέους**

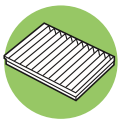

	A/C				PA OE	PA Valeo	CA OE	CA Valeo	PCA Valeo
MITSUBISHI (.../...)									
Pajero Pinin (99>)	+		2x	07/99 ▸	XR315172	**715545**			
Shogun 4 (2006>)	+/-			09/06 ▸			7803A027	**715622**	
Space Star	+		2x	12/98 ▸ 1999	MR460201	**715548**			
Space Star	-			1999 ▸	MR262425	**715688**			
Space Runner	+			08/99 ▸	MR360889	**715547**			
Space Wagon	+			10/98 ▸	MR360889	**715547**			
NEOPLAN (NEOMAN)									
Centroliner	+/-		Recir.air	03/02 ▸	88779100003	**716047**			
Centroliner	+		Webasto	10/98 ▸	0018255447	**716049**			
Centroliner	+/-			10/98 ▸	81779100012	**716057**			
Cityliner	+		Webasto	07/06 ▸	1101891A	**716046**			
Starliner I	+			09/96 ▸	180412710	**716055**			
Starliner II	+		Webasto	07/06 ▸	1101891B	**716046**			
Tourliner	+/-		Konvecta	01/03 ▸	88779100002	**716048**			
Tourliner	+/-		Recir.air	09/03 ▸	88779100003	**716047**			
Tourliner	+			09/03 ▸	0018355547	**716056**			
Transliner	+/-			11/90 ▸	180740200	**716054**			
Trendliner	+/-		Recir.air	09/04 ▸	81619100018	**716036**			
Trendliner	+/-			2004 ▸			81619100019	**716037**	
NISSAN									
Almera (95>2000)	A+		2x	07/95 ▸ 01/00	272751N626	**715575**			
Almera (2000>2003)	+			02/00 ▸ 01/03	27891BM401	**698734**			
Almera (2003>)	+			02/03 ▸	27891BM401	**698734**			
Almera Tino (2003>)	+			02/03 ▸	27891BM402	**698734**			
Altima	+			01/02 ▸	27277CL025H	**715631**	27277Z5000	**715560**	
Cube	+/-			08/09 ▸	278911FC0A	**715709**			
Dualis	+			02/07 ▸	27277EN025	**715559**			
Frontier	+		2x	07/05 ▸	27274EA000	**715520**			
Juke	+			07/10 ▸	272771KA0A	**715721**	272774936R	**715722**	
Leaf	+/-			12/10 ▸	278911FC0A	**715709**			
Maxima QX (A33)	+		2x	01/00 ▸			272773Y525	**698873**	
Maxima VI	+			04/04 ▸ 05/06	27277CL025H	**715631**	27277Z5000	**715560**	
Micra (K11)	+			10/96 ▸ 02/03	278936F600	**715549**			
Micra (K12)	+/-			01/03 ▸ 03/10	27891AX010	**698753**			
Micra (2010>)	+/-			04/10 ▸	272771HE0E	**715706**			
Murano	+			04/03 ▸ 05/08	27277CL025H	**715631**	27277Z5000	**715560**	
Murano (Z51) (2008>)	+/-			06/08 ▸	B7277JN20A	**715703**			
Navarra	+		2x	07/05 ▸	27274EA000	**715520**			
Note	+/-			09/05 ▸	27891AX010	**698753**			
Pathfinder (R50) (1997>)	+		2x	09/97 ▸ 03/05	272747J125	**715561**			
Pathfinder (R51) (2005>)	+		2x	04/05 ▸	27274EA000	**715520**			
Patrol GR (Y61)	+		2x	06/97 ▸ 07/04	272747J125	**715561**			
Pixo	+/-			06/09 ▸	278914A00C	**715694**			
Primera (P11) (96>2002)	+			06/96 ▸ 09/99	278932F900	**698707**			
Primera (P11) (96>2002)	+			09/99 ▸ 02/02	278932F900	**698707**			
Primera (P12)	+			03/02 ▸	27891BM401	**698734**			

▲ **Soon available P/N** Références disponibles prochainement **Artikel in Kürze lieferbar** Referencias disponibles próximamente **Referências disponiveis próximamente** Riferimenti disponibili nei prossimi mesi **Binnenkort leverbaar** Produkt wkrótce dostępny **Позиции скоро будут доступны** Produkt brzy dostupny **Uskoro u prodaji** Referințele disponibile în curând **Очаквайте скоро** Yakında sunulacak **Κωδικούς σύντομα διαθέσιμα**

	A/C				PA OE	PA Valeo	CA OE	CA Valeo	PCA Valeo
NISSAN (.../...)									
Qashqai (2007>2010)	+			03/07 ▸ 01/10	27277EN025	**715559**	27277JD10A	**•715732**	
Qashqai (2010>)	+			02/10 ▸	27277EN000	**715559**			
Rogue	+			03/08 ▸	27277EN025	**715559**			
Teana	+/-			02/08 ▸	B7277JN20A	**715703**			
Terrano II (R20) (93>2001)	+			03/93 ▸ 02/04	278939F500	**698707**			
Tiida (C11X) (2007>)	+/-			03/07 ▸	27891EL00A	**715708**			
Xterra	+		2x	07/05 ▸	999M1D4005	**715520**			
X-Trail (2001>2007)	+			06/01 ▸ 02/07	B727A79925	**715631**	27277Z5000	**715560**	
X-Trail (2007>)	+			03/07 ▸	27277EN025	**715559**			
NISSAN									
Primastar	+/-			09/02 ▸	2729800QAA	**715513**			
Kubistar	+			09/03 ▸	B729800QAA	**698255**	7711228912	**715538**	**▲701018**
Kubistar	-			09/03 ▸	2729800QAA	**715513**			
NV200 (2009>)	+/-			08/09 ▸	27891EL00A	**715708**			
NV400	+/-		2x	01/11 ▸	7701209837	**715649**			
OPEL									
Agila	+/-			03/00 ▸ 01/08	4705463	**698773**			
Agila	+/-			02/08 ▸	4710210	**715644**			
Ampera	+/-			06/11 ▸			1808246	**715659**	
Antara	+/-			06/06 ▸	4803883	**715654**			
Astra F (91>98)	+/-			03/91 ▸ 01/98	6808600	**698165**	1718044	**715632**	
Astra G (98>2004)	+		Behr	02/98 ▸ 02/04	6808611	**698663**	1718042	**698708**	**▲701008**
Astra G (98>2004)	+/-		Delphi	02/98 ▸ 02/04	1808610	**698662**	1718046	**698875**	
Astra H (2004>)	+/-			03/04 ▸	6808606	**698874**	6808607	**698875**	
Astra J	+/-			11/09 ▸	1808524	**715658**	1808246	**715659**	
Calibra	+/-			09/89 ▸ 07/97	6808600	**698165**	1718044	**715632**	
Corsa B (93>2000)	-			03/93 ▸ 08/00	1808604	**698166**			
Corsa B (93>2000)	+			03/93 ▸ 08/00	6808600	**698165**	1718044	**715632**	
Corsa B (93>2000)	+			03/93 ▸ 08/00	1808606	**715645**			
Corsa C (2000>2003)	+/-			09/00 ▸ 08/03	1808619	**698711**	1808624	**698710**	**▲701010**
Corsa C (2003>2006)	+/-			09/03 ▸	6808601	**698711**	1808624	**698710**	**▲701010**
Corsa D (2006>)	+/-			07/06 ▸	6808622	**715552**	6808623	**715553**	**▲701003**
Insignia	+			01/09 ▸	1808524	**715658**	1808246	**715659**	
Meriva (2003>2010)	+/-			05/03 ▸ 04/10	6808604	**698876**	6808605	**698877**	
Meriva (2010>)	+/-			05/10 ▸	1808524	**715658**	1808246	**715659**	
Mokka	+/-			12/12 ▸			1808246	**715659**	
Monterey	+		2x	04/98 ▸ 08/99	1808613	**715569**			
Omega A (86>1994)	+/-			09/86 ▸ 05/94	1808605	**698167**			
Omega B (94>2003)	+/-			03/94 ▸ 07/03	1808605	**698167**	1808614	**698746**	
Signum	+/-			06/03 ▸	6808601	**698711**	1808624	**698710**	**▲701010**
Sintra	+/-		2x	03/96 ▸ 12/99	1808609	**698712**			
Tigra (94>2003)	-			10/94 ▸ 01/01	1808604	**698166**			
Tigra (94>2003)	+			10/94 ▸ 01/01	6808600	**698165**	1718044	**715632**	
Tigra Twin Top (2004>)	+/-			06/04 ▸	6808601	**698711**	1808624	**698710**	**▲701010**
Vectra B (95>99)	+/-			10/95 ▸ 01/99	1808607	**698202**			
Vectra B (95>2002)	+/-			10/95 ▸ 04/02	1808607	**698202**	1808608	**715675**	

• **New** Nouveau **Neu** Nuevo **Novo** Nuovo **Nieuw** Nowi **Новый** Novy **Nou** Yeni **Νέους**

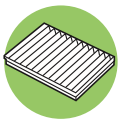

	A/C				PA OE	PA Valeo	CA OE	CA Valeo	PCA Valeo
OPEL (.../...)									
Vectra C (2002>)	+/-			04/02 ▸	6808601	**698711**	1808624	**698710**	**▲701010**
Zafira (98>2005)	+/-			01/99 ▸ 06/05	6808611	**698663**	1718042	**698708**	**▲701008**
Zafira II (2005>)	+			07/05 ▸ 09/11	6808611	**698663**	1718042	**698708**	**▲701008**
Zafira III (2011>)	+/-			10/11 ▸			1808246	**715659**	
OPEL									
Combo (93>2001)	-			03/93 ▸ 09/01	1808604	**698166**			
Combo (93>2001)	+			03/93 ▸ 09/01	6808600	**698165**	1718044	**715632**	
Combo (2001>)	-			10/01 ▸	6808601	**698711**			
Combo (2001>)	+			10/01 ▸			1808624	**698710**	**▲701010**
Movano	+/-			07/98 ▸	4408840	**715513**			
Vivaro	+/-			05/01 ▸	4408840	**715513**			
PEUGEOT									
106	+			09/91 ▸ 07/03	644191	**715589**			
107	+			06/05 ▸	6479A5	**715515**			
1007	-			04/05 ▸	6447KK	**698664**			
1007	A+			04/05 ▸			6447KL	**698714**	**▲701014**
1007	M+			04/05 ▸	6447KK	**698664**			
206	+			09/98 ▸	6447AZ	**698488**	6447PE	**698749**	
206	-			09/98 ▸	6447AZ	**698488**			
206+	+/-			03/09 ▸	6447AZ	**698488**			
207	-		2x	03/06 ▸	6447VY	**715556**			
207	M+		2x	03/06 ▸	6447VY	**715556**			
207	A+		2x	03/06 ▸			6447VX	**715557**	**▲701007**
208	M+		2x	03/12 ▸	6447VY	**715556**			
208	-		2x	03/12 ▸	6447VY	**715556**			
208	A+		2x	03/12 ▸			6447VX	**715557**	**▲701007**
306	+			05/93 ▸	002484	**715646**			
307 (2001>2004)	-			03/01 ▸ 05/05	6447KK	**698664**			
307 (2001>2004)	A+			03/01 ▸ 05/05			6447KL	**698714**	**▲701014**
307 (2001>2004)	M+			03/01 ▸ 05/05	6447KK	**698664**			
307 (2005>)	+/-			06/05 ▸	6447KK	**698664**	6447KL	**698714**	**▲701014**
307 (2005>)	A+			06/05 ▸			6447KL	**698714**	**▲701014**
308	+			09/07 ▸	6447KK	**698664**	6447KL	**698714**	**▲701014**
3008	+/-		2x	06/09 ▸	6447XF	**715554**	6447XG	**715555**	
405	+			07/92 ▸ 10/96	644793	**698235**			
406 (95>99)	-			10/95 ▸ 03/99	6447S5	**698203**			
406 (95>99)	+			10/95 ▸ 03/99	6447S5	**698203**	6447PG	**698748**	
406 (99>)	+			03/99 ▸ 10/04	6447S5	**698203**	6447PG	**698748**	
407	+/-			04/04 ▸ 03/08	647904	**715570**	6447RG	**698884**	**▲701002**
407	+			04/08 ▸			647945	**715635**	
407 Coupé	+			10/05 ▸	647904	**715570**	6447RG	**698884**	**▲701002**
4007	+			07/07 ▸	6447ZX	**715631**	6447ZX	**715623**	
4008	+/-			04/12 ▸	6447ZY	**715631**	7803A005	**715623**	
508	+			01/11 ▸			6479K9	**715673**	**▲701000**
5008	+/-		2x	06/09 ▸	6447XF	**715554**	6447XG	**715555**	
605	+			07/94 ▸ 05/99	6447K6	**698815**			

▲ **Soon available P/N** Références disponibles prochainement **Artikel in Kürze lieferbar** Referencias disponibles próximamente **Referências disponiveis próximamente** Riferimenti disponibili nei prossimi mesi **Binnenkort leverbaar** Produkt wkrótce dostępny **Позиции скоро будут доступны** Produkt brzy dostupny **Uskoro u prodaji** Referințele disponibile în curând **Очаквайте скоро** Yakında sunulacak **Κωδικούς σύντομα διαθέσιμα**

	A/C				PA OE	PA Valeo	CA OE	CA Valeo	PCA Valeo
PEUGEOT (.../...)									
607 (2000>2004)	+			05/00 ▸ 09/04			6447GW	**698713**	
607 (2004>)	+			10/04 ▸			6447GW	**698713**	
806 (94>98)	+/-		3x	07/94 ▸ 09/98	6447P2, 6447P3	**715530**			
806 (98>2002)	+/-		3x	10/98 ▸ 05/02	6447P2, 6447P3	**715530**			
807	+			06/02 ▸	6447LY	**698738**	6447TA	**715558**	**▲701013**
RCZ	+/-			05/10 ▸			647975	**698714**	**▲701014**
PEUGEOT									
Bipper	+/-			02/08 ▸	647963	**715616**			
Bipper	+/-			07/05 ▸	647984	**715552**			
Boxer (94>2006)	+/-			02/94 ▸ 06/06	6447SY	**698858**			
Boxer (2006>)	+/-			07/06 ▸	6447YA	**715636**			
Expert (95>2003)	+		3x	07/95 ▸ 12/03	6447P2, 6447P3	**715530**			
Expert (2004>2006)	+			01/04 ▸ 12/06	6447LY	**698738**	6447TA	**715558**	**▲701013**
Expert (2007>)	+/-			01/07 ▸	6447YL	**715614**	6447YJ	**715613**	
Partner (96>2002) ▸ 8805	+			06/96 ▸ 12/00	6447Z5	**698146**			
Partner (96>2002) 8806 ▸	+			12/00 ▸ 11/02	6447KR	**698657**			
Partner (2002>)	+			11/02 ▸	6447KR	**698657**	6447SZ	**715629**	
Partner (2008>)	+/-		2x	04/08 ▸	6447XF	**715554**	6447XG	**715555**	
Ranch (96>2002) ▸ 8805	+			06/96 ▸ 12/00	6447Z5	**698146**			
Ranch (96>2002) 8806 ▸	+			12/00 ▸ 11/02	6447KR	**698657**			
Ranch (2002>)	+			11/02 ▸	6447KR	**698657**	6447SZ	**715629**	
PORSCHE									
911 (996)	+			06/97 ▸	99657221901	**698203**	99657121903	**698748**	
911 (997)	+			07/04 ▸	99657221901	**698203**	99757121900	**698748**	
Boxster (986)	+			08/96 ▸ 10/04	99657221901	**698203**	99657121902	**698748**	
Boxster (987)	+			11/04 ▸	99657221901	**698203**	99757121900	**698748**	
Cayenne	+			03/03 ▸ 05/10			95557221910	**698768**	
Cayman	+			11/05 ▸ 11/08	99657221901	**698203**	99757121900	**698748**	
Cayman	+			12/08 ▸			95857221900	**715704**	
Panamera	+			09/09 ▸			97057362300	**715693**	
RENAULT									
Avantime	+		2x	09/01 ▸ 03/03	6025370624	**698290**	6025372486	**715568**	
Clio I	+/-			03/98 ▸ 03/01	7700424098	**698255**	7711228912	**715538**	**▲701018**
Clio II	+/-			04/01 ▸ 08/05	7700424098	**698255**	7711228912	**715538**	**▲701018**
Clio III	+/-			09/05 ▸ 03/09	7701062227	**698753**			
Clio III FL (2009>)	+/-			04/09 ▸	272775374R	**698753**			
Clio IV	+/-			09/12 ▸			272770567R	**•715725**	
Clio Campus Evolution	+/-			06/09 ▸	7700424098	**698255**	7711228912	**715538**	**▲701018**
Espace II	+/-		2x	01/91 ▸ 10/96	6025370624	**698290**	6025372486	**715568**	
Espace III	+/-		2x	10/96 ▸ 06/00	6025370624	**698290**	6025372486	**715568**	
Espace IV	+			09/02 ▸	7701056389	**715562**	7701056390	**698737**	

• **New** Nouveau **Neu** Nuevo **Novo** Nuovo **Nieuw** Nowi **Новый** Nový **Nou** Yeni **Νέους**

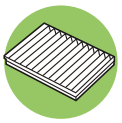

	A/C				PA OE	PA Valeo	CA OE	CA Valeo	PCA Valeo
RENAULT									(.../...)
Fluence	+			02/10 ▸	272772100R	**715721**	272774936R	**715722**	
Koleos	+			09/08 ▸	27891JY15A	**715724**	27891JY10A	**715667**	
Laguna I	+/-			01/94 ▸ 12/00	7700834816	**698173**			
Laguna II	+/-			01/01 ▸ 09/07	7701048748	**698594**	7701048749	**698715**	**▲701015**
Laguna III	+/-		2x	10/07 ▸			272770001R	**715607**	
Latitude	+/-		2x	11/10 ▸			272774653R	**•715734**	
Mégane (95>99) ▸ 980402	+			11/95 ▸ 04/98	7700845811	**698149**			
Mégane (95>99) 980403 ▸	-			04/98 ▸ 02/99	7700424098	**698255**	7711228912	**715538**	**▲701018**
Mégane (95>99) 980403 ▸	+			04/98 ▸ 02/99	7700424093	**698276**			
Mégane (98>2002)	-			05/98 ▸ 08/02	7700424098	**698255**	7711228912	**715538**	**▲701018**
Mégane (98>2002)	+			05/98 ▸ 08/02	7700424093	**698276**			
Mégane II	+/-			09/02 ▸ 09/08	7701055109	**698730**	7701064235	**715539**	
Mégane III	+/-			10/08 ▸			272778970R	**715647**	**▲701006**
Mégane Scénic (96>99) ▸ 980101	+			10/96 ▸ 01/98	7700845222	**698177**			
Mégane Scénic (96>99) 980102 ▸	+			01/98 ▸ 09/99	7700428820	**698279**			
Mégane Scénic (96>99)	-			10/96 ▸ 09/99	7700845219	**698176**			
Mégane Scénic (96>99)	+/-			10/96 ▸ 09/99	7700846236	**698175**			
Mégane Scénic (99>2003)	+/-			09/99 ▸ 04/03	7701047513	**698512**			
Mégane Scénic (99>2003)	+/-			09/99 ▸ 04/03	7700846236	**698175**			
Modus	+/-			09/04 ▸	7701062227	**698753**			
Scénic II	+			05/03 ▸ 02/09	7701055110	**698736**	7701064237	**715610**	
Scénic III	+/-			03/09 ▸			272771128R	**715672**	**▲701012**
Grand Scénic	+/-			06/09 ▸			272771128R	**715672**	**▲701012**
Thalia	+			01/01 ▸	7700424098	**698255**	7711228912	**715538**	**▲701018**
Twingo I	+			08/94 ▸ 08/98	7701409324	**698878**			
Twingo II	+/-			09/98 ▸ 06/07	7701409324	**698878**			
Twingo III	+/-			07/07 ▸	7701062227	**698753**			
Vel Satis	A+			01/02 ▸			7701048749	**698715**	**▲701015**
Vel Satis	M+			01/02 ▸	7701048748	**698594**			
Wind	+/-			07/10 ▸	272775374R	**698753**			
RENAULT									
Kangoo (97>2003)	-			09/97 ▸	7701042499	**715633**			
Kangoo (97>2003) 991105 ▸	+			11/99 ▸ 02/03	7700424098	**698255**	7711228912	**715538**	**▲701018**
Kangoo (2003>2007)	+			03/03 ▸ 01/08	7700424098	**698255**	7711228912	**715538**	**▲701018**
Kangoo (2008>)	+		2x	02/08 ▸	7701209837	**715649**			
Kangoo Be Bop	+		2x	02/08 ▸	7701209837	**715649**			
Master	+		2x	04/10 ▸	7701209837	**715649**			
Trafic	+/-			04/01 ▸	7701050319	**715513**			
RENAULT TRUCKS									
AE (Magnum)	+/-			09/90 ▸	5001829129	**716000**			
Kerax	+/-			09/97 ▸ 04/06	5001833354	**716001**			

▲ **Soon available P/N** Références disponibles prochainement **Artikel in Kürze lieferbar** Referencias disponibles próximamente **Referências disponiveis próximamente** Riferimenti disponibili nei prossimi mesi **Binnenkort leverbaar** Produkt wkrótce dostępny **Позиции скоро будут доступны** Produkt brzy dostupny **Uskoro u prodaji** Referințele disponibile în curând **Очаквайте скоро** Yakında sunulacak **Κωδικούς σύντομα διαθέσιμα**

	A/C				PA OE	PA Valeo	CA OE	CA Valeo	PCA Valeo
RENAULT TRUCKS (.../...)									
Kerax	+/-			05/06 ▸	5001867491	**716009**			
Midlum	+/-			02/00 ▸ 04/06	5001833354	**716001**			
Midlum	+/-			05/06 ▸	5001867491	**716009**			
Premium	+/-			04/96 ▸ 04/06	5001833354	**716001**			
Premium	+/-			05/06 ▸	5001867491	**716009**			
ROLLS ROYCE									
Phantom	A+		2x	01/03 ▸			64116921019	**698857**	
Ghost	+/-		2x	11/09 ▸			64119163329	**715690**	
ROVER									
25	+			12/99 ▸	JKR100020	**698196**			
45	-			01/00 ▸ 04/05	JKX100010	**698819**			
45	+			01/00 ▸ 04/05	JKR100020	**698196**			
75	+/-			02/99 ▸	JKR100183	**698879**	JKR000040	**698880**	
200	-			09/90 ▸ 01/00	JKX100010	**698819**			
200	+			09/90 ▸ 01/00	JKR100020	**698196**			
400	-			01/95 ▸ 03/00	JKX100010	**698819**			
400 XD354435 ▸	+			01/95 ▸ 03/00	JKR100080	**698869**			
Streetwise	+			08/03 ▸	JKR100020	**698196**			
SAAB									
9 -2x	+			2004 ▸ 2006			G3210FE000	**715680**	
9-3 (98>2002)	+			04/98 ▸ 09/02	5047113	**715514**			
9-3 (2002>)	+/-			09/02 ▸	93172229	**698711**	9179904	**698710**	**▲701010**
9-3 Cabriolet	+/-			08/03 ▸	93172229	**698711**	9179904	**698710**	**▲701010**
9-5 (97>2001)	+			09/97 ▸ 08/01			12758727	**698723**	
9-5 (2001>)	+			09/01 ▸			12758727	**698723**	
900 (93>98)	+			07/93 ▸ 02/98	5047113	**715514**			
9000	+			06/84 ▸ 07/91	9625674	**698199**			
SATURN									
Vue	+/-			06/06 ▸	615974	**715654**			
SCANIA (BUS)									
Omni	+			09/02 ▸	1100372B	**716049**			
SCANIA TRUCKS									
Serie 4	+/-		prefilter	10/96 ▸ 10/04	1326180	**716040**			
Serie 4	+/-			10/95 ▸ 10/04	1420197	**716039**			
Serie P	+/-		prefilter	09/04 ▸	1326180	**716040**			
Serie P	+/-			09/04 ▸	1420197	**716039**			
Serie R	+/-		prefilter	06/04 ▸	1326180	**716040**			
Serie R	+/-			06/04 ▸	1420197	**716039**			
Serie T	+/-		prefilter	09/04 ▸ 12/05	1326180	**716040**			

• **New** Nouveau **Neu** Nuevo **Novo** Nuovo **Nieuw** Nowi **Новый** Novy **Nou** Yeni **Νέους**

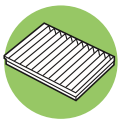

	A/C				PA OE	PA Valeo	CA OE	CA Valeo	PCA Valeo
SCANIA TRUCKS (.../...)									
Serie T	+/-			09/04 ▸ 12/05	1420197	**716039**			
Serie P,G,R,T	+/-			10/07 ▸	1770813	**716052**			
SCION									
xA	+			05/03 ▸ 10/07	8856852010	**698681**	8974000820	**715650**	
xB	+			05/03 ▸ 10/07	8856852010	**698681**	8974000820	**715650**	
SEAT									
Alhambra I	+/-			03/96 ▸ 05/00	7M0819644	**698247**	7M3819644	**698696**	
Alhambra II	+/-			06/00 ▸ 03/10	7M0819644	**698247**	7M3819644	**698696**	
Alhambra III	+/-			04/10 ▸	1K0819644	**698800**	1K1819653B	**698801**	**▲701001**
Alhambra III	+/-			04/10 ▸			1K2819653B	**715665**	
Altea	+/-			03/04 ▸	1K0819644A	**698800**	1K1819653A	**698801**	**▲701001**
Arosa	+/-			02/97 ▸ 08/00	1H0819644B	**698159**	1H0091800	**698686**	
Arosa	+			09/00 ▸	1H0819644B	**698159**	1J0819644	**698716**	**▲701016**
Arosa	+/-		w/o Plastic Frame	02/97 ▸	1H0819644B	**698885**			
Cordoba (93>96)	+/-			09/93 ▸ 06/96	1H0819644B	**698159**	1H0091800	**698686**	
Cordoba (93>96)	+/-		w/o Plastic Frame	09/93 ▸ 06/96	1H0819644B	**698885**			
Cordoba (96>99)	+/-			07/96 ▸ 05/99	1H0819644B	**698159**	1H0091800	**698686**	
Cordoba (96>99)	+/-		w/o Plastic Frame	07/96 ▸ 05/99	1H0819644B	**698885**			
Cordoba (99>2002)	+/-			05/99 ▸ 08/02	1H0819644B	**698159**	1H0091800	**698686**	
Cordoba (99>2002)	+/-		w/o Plastic Frame	05/99 ▸ 08/02	1H0819644B	**698885**			
Cordoba (2002>)	+/-			09/02 ▸	6Q0820367	**698685**	6Q0819653	**698739**	**▲701009**
Exeo	+/-			03/09 ▸	8E0819439	**698606**	4B0819439C	**698683**	**▲701023**
Ibiza (93>99)	+/-			02/93 ▸ 06/99	1H0819644B	**698159**	1H0091800	**698686**	
Ibiza (93>99)	+/-		w/o Plastic Frame	02/93 ▸ 06/99	1H0819644B	**698885**			
Ibiza (99>2001)	+/-			07/99 ▸ 08/01	1H0819644B	**698159**	1H0091800	**698686**	
Ibiza (99>2001)	+/-		w/o Plastic Frame	07/99 ▸ 08/01	1H0819644B	**698885**			
Ibiza (2001>2011)	+/-			09/01 ▸ 01/12	6Q0820367	**698685**	6Q0819653	**698739**	**▲701009**
Ibiza	+/-			10/10 ▸	6R0820367	**•715737**	6R0819653	**•715727**	
Leon (99>2005)	+/-			08/99 ▸ 09/05	1H0819644B	**698159**	1J0819644	**698716**	**▲701016**
Leon (99>2005)	+/-		w/o Plastic Frame	08/99 ▸ 09/05	1H0819644B	**698885**			
Leon (2005>)	-			09/05 ▸	1K0819644A	**698800**			
Leon (2005>)	+			09/05 ▸			1K1819653	**698801**	**▲701001**
Leon (2005>)	+/-			11/05 ▸ 05/07			1K2819653A	**715665**	
Mii	+/-			10/11 ▸	1S0820367	**•715744**			
Toledo (91>1998)	-			05/91 ▸ 10/98	191819638	**715653**			
Toledo (98>2004)	+			10/98 ▸ 07/04	1H0819644B	**698159**	1H0091800	**698686**	
Toledo (98>2004)	-			10/98 ▸ 07/04	1H0819644B	**698159**	1H0091800	**698686**	
Toledo (98>2004)	+/-		w/o Plastic Frame	10/98 ▸ 07/04	1H0819644B	**698885**			
Toledo (2004>)	+/-			09/04 ▸	1K0819644A	**698800**			
Toledo	+/-			01/03 ▸			1K2819653A	**715665**	
SEAT									
Inca	+/-			11/95 ▸ 06/03	1H0819644B	**698159**	1H0091800	**698686**	
Inca	+/-		w/o Plastic Frame	11/95 ▸ 06/03	1H0819644B	**698885**			

▲ **Soon available P/N** Références disponibles prochainement **Artikel in Kürze lieferbar** Referencias disponibles próximamente **Referências disponiveis próximamente** Riferimenti disponibili nei prossimi mesi **Binnenkort leverbaar** Produkt wkrótce dostępny **Позиции скоро будут доступны** Produkt brzy dostupny **Uskoro u prodaji** Referințele disponibile în curând **Очаквайте скоро** Yakında sunulacak **Κωδικούς σύντομα διαθέσιμα**

	A/C				PA OE	PA Valeo	CA OE	CA Valeo	PCA Valeo
SKODA									
Citigo	+/-			10/11 ▸	1S0820367	•715744			
Fabia (99>2010)	+/-			08/99 ▸ 06/10	6Q0820367	698685	6Q0819653	698739	▲701009
Fabia	+/-			07/10 ▸	6R0820367	•715737	6R0819653	•715727	
Felicia (94>2001)	+/-			10/94 ▸ 08/01			6Q0819653	698739	▲701009
Octavia	+/-		w/o Plastic Frame	10/96 ▸ 05/04	1H0819644B	698885			
Octavia	+/-		With Plastic Frame	08/00 ▸ 12/10	1H0819644B	698159	1J0819644A	698716	▲701016
Octavia (96>2004)	+/-			10/96 ▸ 05/04	1H0819644B	698159	1H0091800	698686	
Octavia (2004>)	+/-			05/04 ▸	1K0819644A	698800	1K1819653A	698801	▲701001
Octavia (2004>)	+/-			06/04 ▸			1K2819653A	715665	
Praktik	+/-			08/10 ▸	6R0820367	•715737	6R0819653	•715727	
Roomster	+/-			03/06 ▸ 07/10	6Q0820367	698685	6Q0819653	698739	▲701009
Roomster	+/-			08/10 ▸	6R0820367	•715737	6R0819653	•715727	
Superb	+			02/02 ▸ 03/08	1H0819644B	698159	1H0091800	698686	
Superb	+		w/o Plastic Frame	02/02 ▸ 03/08	1H0819644B	698885			
Superb (2008>)	+/-			04/08 ▸	1K0819644B	698800	1K1819653B	698801	▲701001
Superb (2008>)	+/-			03/08 ▸			1K2819653B	715665	
Yeti	+/-			08/09 ▸	1K0819644B	698800	1K1819653B	698801	▲701001
SMART									
Crossblade	+/-			06/02 ▸			0001110V004	698774	
Forfour	+/-			04/04 ▸			0013871V001	698802	
Fortwo	+/-			03/07 ▸	4518350247	•715736	4518300018	715608	
Fortwo, City Coupe	+/-			10/98 ▸			0001110V004	698774	
Roadster, coupe	+/-			05/03 ▸			0013871V001	698802	
SSANGYONG									
Actyon	+		2x	03/05 ▸	68111091A0	715624			
Actyon Sports	+		2x	04/07 ▸	68111091A0	715624			
Korando	+		2x	07/96 ▸ 03/99	6923005400	715566			
Korando	-		2x	07/96 ▸ 03/99	6923005410	715567			
Kyron	+		2x	05/05 ▸	68111091A0	715624			
Musso	M+		2x	1998 ▸ 2005	6923005400	715566			
Musso	A+		2x	1998 ▸ 2005	6923005410	715567			
Musso Sport	+		2x	10/95 ▸	6923005400	715566			
Musso Sport	-		2x	10/95 ▸	6923005410	715567			
Rexton	+		2x	04/02 ▸	6812008030	715699			
Rodius	+		2x	05/05 ▸	6811021000	715700			
SUBARU									
B9 Tribeca				09/06 ▸	72880XA00A	698796			
Forester I	+			08/97 ▸ 09/02	GE210FC000	715626			
Forester II	+			09/02 ▸	72880SA000	715651			
Forester III	+			07/07 ▸	72880FG000	715625			
Impreza I	+			12/96 ▸ 12/00	GE210FC000	715626			
Impreza II	+/-			12/00 ▸ 06/07	72880FE000	715551	G3210FE000	715680	
Impreza III	+			07/07 ▸	72880FG000	715625			
Justy III	+/-			10/03 ▸	9586078F10	698773			

• **New** Nouveau **Neu** Nuevo **Novo** Nuovo **Nieuw** Nowi **Новый** Novy **Nou** Yeni **Νέους**

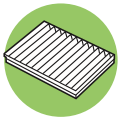

	A/C				PA OE	PA Valeo	CA OE	CA Valeo	PCA Valeo
SUBARU (.../...)									
Justy IV	+/-			09/07 ▸	99906850M2-038	**715637**			
Legacy (98>2003)	+		2x	10/98 ▸ 04/03	G3210AE000	**715563**			
Legacy (2003>)	+			05/03 ▸	72880AG000	**698796**	72880AG000	**715619**	
Legacy	+			09/09 ▸	72880AJ000	**715620**	8713950060	**•715730**	**▲701021**
Outback (2000>2003)	+		2x	10/00 ▸ 04/03	G3210AE000	**715563**			
Outback (2003>)	+			05/03 ▸	72880AG000	**698796**	72880AG000	**715619**	
Outback	+			09/09 ▸	72880AJ000	**715620**	8713950060	**•715730**	**▲701021**
Tribeca	+			01/05 ▸	72880XA000A	**698796**	72880XA000A	**715619**	
Trezia	+			03/11 ▸	72880AJ000	**715620**	8713950060	**•715730**	**▲701021**
SUZUKI									
Alto	+			03/09 ▸	95861M68K10	**715694**			
Grand Vitara I	+		2x	05/98 ▸ 03/03	9586165D000	**698894**			
Grand Vitara II	+			04/03 ▸ 10/05	9586154J00	**715564**			
Grand Vitara III	+			10/05 ▸	9586164J00	**715609**			
Ignis	+/-			09/03 ▸	9586078F10	**698773**			
Jimny	+			09/98 ▸	9586081A10	**715668**			
Kizashi Sport	+/-			09/10 ▸	9586157L00	**•715743**			
Liana	+/-			06/01 ▸	9586154G00	**715698**			
Splash	+/-			05/08 ▸	9586051K00	**715644**			
Swift	+/-			04/05 ▸	9586062J000	**698886**			
SX4	+/-		SX4 JAP	05/06 ▸	9586080J00	**715652**			
SX4	+/-		SX4 HUN	05/06 ▸	9586062J000	**698886**			
Wagon R+	+/-			03/00 ▸	9586078F10	**698773**			
TOYOTA									
4 Runner	+			01/03 ▸	871394701083	**698796**	87139YZZ03	**715619**	
Alphard II	+/-			04/08 ▸	8713952020	**715620**	8713950060	**•715730**	**▲701021**
Auris	+			03/06 ▸	8713902020	**715620**	8713950060	**•715730**	**▲701021**
Avalon	+			04/00 ▸ 11/04	871394701083	**698796**	8713933010	**715619**	
Avalon	+			02/05 ▸	87139YZZ08	**715620**	8713950060	**•715730**	**▲701021**
Avensis (T22)	+		2x	10/97 ▸ 01/03	8888020060	**715572**			
Avensis (T25)	+			01/03 ▸	8856802030	**698795**			
Avensis (T27)	+			11/08 ▸	87139YZZ08	**715620**	8713950060	**•715730**	**▲701021**
Avensis Verso (2001>)	+			05/01 ▸	871394701083	**698796**	0897400850	**715701**	
Aygo	+			02/05 ▸	885080H010	**715515**			
Camry	+			08/01 ▸ 01/06	871394701083	**698796**	87139YZZ03	**715619**	
Camry	+/-			02/06 ▸	8713952020	**715620**	8713950060	**•715730**	**▲701021**
Carina E (T19)	+		2x	01/96 ▸ 12/97	8888020060	**715572**			
Celica (ZT230) (99>)	+			08/99 ▸	871394701083	**698796**	8713933010	**715619**	
Corolla (110) (97>99)	+			04/97 ▸ 11/99	8850812010	**715565**			
Corolla (110) (99>2001)	+			10/99 ▸ 10/01	8850812010	**715565**			
Corolla (120) (2001>)	+/-			10/01 ▸	8856802030	**698795**			
Corolla X	+/-			04/07 ▸	8713952020	**715620**	8713950060	**•715730**	**▲701021**
Corolla Verso (2001>)	+			09/01 ▸	8856802030	**698795**	0897400850	**715701**	
Corolla Verso (E12J) 2.0 D4D	+			01/02 ▸ 05/04	87139YZZ06	**715689**	0897400850	**715701**	
Echo	+			06/99 ▸ 07/05	8856852010	**698681**	8974000820	**715650**	
FJ Cruiser	+			02/06 ▸	871394701083	**698796**	8713933010	**715619**	

▲ **Soon available P/N** Références disponibles prochainement **Artikel in Kürze lieferbar** Referencias disponibles próximamente **Referências disponiveis próximamente** Riferimenti disponibili nei prossimi mesi **Binnenkort leverbaar** Produkt wkrótce dostępny **Позиции скоро будут доступны** Produkt brzy dostupny **Uskoro u prodaji** Referințele disponibile în curând **Очаквайте скоро** Yakında sunulacak **Κωδικούς σύντομα διαθέσιμα**

	A/C				PA OE	PA Valeo	CA OE	CA Valeo	PCA Valeo
TOYOTA (.../...)									
Harrier	+			07/98 ▸	8713948020	**715542**	8850530100	**•715729**	
Highlander I	+			05/01 ▸ 11/07	8713930010	**715542**	8850530100	**•715729**	
Highlander II	+/-			12/07 ▸	8713952020	**715620**	8713950060	**•715730**	**▲701021**
Hilux	+			08/08 ▸	87139YZZ08	**715620**	8713950060	**•715730**	**▲701021**
Land Cruiser	+/-			01/98 ▸ 09/02	8713952020	**715620**	8713950060	**•715730**	**▲701021**
Land Cruiser	+			09/02 ▸	871394701083	**698796**	8713933010	**715619**	
Land Cruiser Prado	+			08/09 ▸	87139YZZ08	**715620**	8713950060	**•715730**	**▲701021**
Matrix	+			04/03 ▸	871394701083	**698796**	8713933010	**715619**	
Picnic (96>2001)	+		2x	09/96 ▸ 05/01	8888020020	**715572**			
Picnic (2001>)	+			05/01 ▸ 07/05	8713947010	**698796**			
Previa (R30)	+			02/00 ▸	871394701083	**698796**	8713933010	**715619**	
Prius	+			05/00 ▸	871394701083	**698796**	8713933010	**715619**	
RAV4 (2000>2006)	+			05/00 ▸ 02/06	8856852010	**698681**	8974000820	**715650**	
RAV4 II (2006>)	+			03/06 ▸	8713952020	**715620**	8713950060	**•715730**	**▲701021**
Sienna	+			06/04 ▸ 07/06	871394701083	**698796**	87139YZZ03	**715619**	
Tundra	+/-			01/07 ▸	8713952020	**715620**	8713950060	**•715730**	**▲701021**
Urban Cruiser	+			01/09 ▸	87139YZZ08	**715620**	8713950060	**•715730**	**▲701021**
Verso	+/-			04/09 ▸	8713952020	**715620**	8713950060	**•715730**	**▲701021**
Verso-S	+/-			11/10 ▸	8713902020	**715620**	8713950060	**•715730**	**▲701021**
Yaris	+		Yaris FR	01/01 ▸ 10/05	871394701083	**698796**	8713933010	**715619**	
Yaris	-		Yaris FR	01/01 ▸ 10/05	871394701083	**698796**	8713933010	**715619**	
Yaris (NCP/SCP)	+		Yaris JAP	01/99 ▸ 10/05	8856852010	**698681**	8974000820	**715650**	
Yaris (NCP/SCP)	-		Yaris JAP	01/99 ▸ 10/05	8856852010	**698681**	8974000820	**715650**	
Yaris Verso	+/-			08/99 ▸ 11/01	8856852010	**698681**	8974000820	**715650**	
Yaris Verso	+/-			12/01 ▸	8713947010	**698796**	8713933010	**715619**	
Yaris II	+			01/06 ▸	8713952020	**715620**	8713950060	**•715730**	**▲701021**
Yaris III	+/-			09/11 ▸	8713952020	**715620**	8713950060	**•715730**	**▲701021**
VAUXHALL									
Agila	+/-			06/00 ▸ 12/07	9196805	**698773**			
Agila	+/-			02/08 ▸	93194847	**715644**			
Antara	+/-			06/06 ▸	96440878	**715654**			
Astra III (91>98)	+			09/91 ▸ 03/98	9200067	**698165**	9121625	**715632**	
Astra IV (98>2004)	+/-		Delphi	04/98 ▸ 03/04	90520689	**698662**	91132359	**698875**	
Astra IV (98>2004)	+/-		Behr	04/98 ▸ 03/04	90559549	**698663**	91132364	**698708**	**▲701008**
Astra V (2004>)	+/-			03/04 ▸	13175553	**698662**	13175554	**698875**	
Belmont	+/-			01/86 ▸ 09/91	93182435	**698165**			
Calibra R1000001 ▸	+/-			06/90 ▸ 07/97	9200067	**698165**	9121625	**715632**	
Corsa I (93>2000)	-			04/93 ▸ 08/00	90509367	**698166**			
Corsa I (93>2000)	+			04/93 ▸ 08/00	90512706	**715645**			
Corsa II (2000>2003)	+/-			09/00 ▸ 08/03	93172299	**698711**	93172129	**698710**	**▲701010**
Corsa II (2003>2006)	+/-			09/03 ▸ 06/06	93172299	**698711**	93172129	**698710**	**▲701010**
Corsa III (2006>)	+/-			07/06 ▸	55702456	**715552**	55702468	**715553**	**▲701003**
Insignia	+			01/09 ▸	52425938	**715658**	52420930	**715659**	
Meriva	+/-			05/03 ▸	93174800	**698876**	93174801	**698877**	
Meriva	+/-			05/10 ▸	52425938	**715658**	13271191	**715659**	
Mokka	+/-			12/12 ▸			1808246	**715659**	

• **New** Nouveau **Neu** Nuevo **Novo** Nuovo **Nieuw** Nowi **Новый** Novy **Nou** Yeni **Νέους**

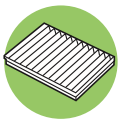

	A/C				PA OE	PA Valeo	CA OE	CA Valeo	PCA Valeo
VAUXHALL (.../...)									
Monterey	+		2x	04/98 ▸ 08/99	97170804	**715569**			
Omega	+/-			04/94 ▸	90510338	**698167**	9192320	**698746**	
Signum	+/-			06/03 ▸	93172299	**698711**	93172129	**698710**	**▲701010**
Sintra	+		2x	03/96 ▸ 12/99	52470574	**698712**			
Tigra	-			11/94 ▸ 01/01	90509367	**698166**			
Tigra	+			11/94 ▸ 01/01	90512706	**715645**			
Tigra Twin Top	+/-			06/04 ▸	93172299	**698711**	93172129	**698710**	**▲701010**
Vectra (95>2002)	+/-			10/95 ▸ 03/02	90512779	**698202**	90541317	**715675**	
Vectra (2002>)	+/-			04/02 ▸	93172299	**698711**	93172129	**698710**	**▲701010**
Zafira	+/-			05/99 ▸ 09/11	93182436	**698663**	91132364	**698708**	**▲701008**
Zafira (2011>)	+/-			10/11 ▸			13271191	**715659**	
VAUXHALL									
Combo (93>2001)	-			10/93 ▸ 09/01	90509367	**698166**			
Combo (93>2001)	+			10/93 ▸ 09/01	9200067	**698165**	9121625	**715632**	
Combo (2001>)	-			10/01 ▸	93172299	**698711**			
Combo (2001>)	+			10/01 ▸			93172129	**698710**	**▲701010**
Movano	+/-			07/98 ▸	4408840	**715513**			
Vivaro	+/-			08/01 ▸	91160128	**715513**			
VOLKSWAGEN									
Amarok	+/-			11/09 ▸	7H0819631	**715581**			
Bora	+/-			09/98 ▸ 07/05	1H0819644B	**698159**	1J0819644A	**698716**	**▲701016**
Bora	+/-		w/o Plastic Frame	09/98 ▸ 07/05	1H0819644B	**698885**			
Eos	+/-			03/06 ▸	1K0819644A	**698800**	1K1819653A	**698801**	**▲701001**
Eos	+/-			05/06 ▸			1K2819653B	**715665**	
Fox	+/-			11/04 ▸	6Q0820367	**698685**	6Q0819653	**698739**	**▲701009**
Golf I	-			08/83 ▸ 04/93	191819638	**715653**			
Golf I Cabriolet	-			08/83 ▸ 04/93	191819638	**715653**			
Golf II Cabriolet	+			11/91 ▸ 02/98	1H0819644B	**698159**	1H0091800	**698686**	
Golf III ▸ 1HP-990 000	+/-			09/91 ▸ 07/93	1H0819638	**698160**			
Golf III	+/-			07/93 ▸ 10/97	1H0819644B	**698159**	1H0091800	**698686**	
Golf III	+/-		w/o Plastic Frame	11/91 ▸ 10/97	1H0819644B	**698885**			
Golf III Cabriolet	+/-			03/98 ▸ 04/02	1H0819644B	**698159**	1H0091800	**698686**	
Golf IV	+/-			10/97 ▸ 10/03	1H0819644B	**698159**	1J0819644A	**698716**	**▲701016**
Golf IV	+/-		w/o Plastic Frame	10/97 ▸ 10/03	1H0819644B	**698885**			
Golf V	-			10/03 ▸ 09/08	1K0819644A	**698800**			
Golf V	+			10/03 ▸ 09/08	1K0819644A	**698800**	1K1819653A	**698801**	**▲701001**
Golf V	+/-			10/03 ▸ 09/08			1K2819653A	**715665**	
Golf VI	+/-			10/08 ▸	1K0819644A	**698800**	1K1819653A	**698801**	**▲701001**
Golf VI	+/-			10/08 ▸			1K2819653B	**715665**	
Golf VI Cabriolet	+/-			05/12 ▸			1K2819653B	**715665**	
Golf VI Cabriolet	+/-			05/12 ▸	1K0819644B	**698800**	1K1819653B	**698801**	**▲701001**
Golf VII	+/-		ultrafine	09/12 ▸			5Q0818653	**715720**	**▲701020**
Golf Plus	+/-			01/05 ▸	1K0819644A	**698800**	1K1819653A	**698801**	**▲701001**
Golf Plus	+/-			01/05 ▸			1K2819653B	**715665**	
Jetta (83>92)	-			08/83 ▸ 07/92	191819638	**715653**			

▲ **Soon available P/N** Références disponibles prochainement **Artikel in Kürze lieferbar** Referencias disponibles próximamente **Referências disponiveis próximamente** Riferimenti disponibili nei prossimi mesi **Binnenkort leverbaar** Produkt wkrótce dostępny **Позиции скоро будут доступны** Produkt brzy dostupny **Uskoro u prodaji** Referințele disponibile în curând **Очаквайте скоро** Yakında sunulacak **Κωδικούς σύντομα διαθέσιμα**

	A/C				PA OE	PA Valeo	CA OE	CA Valeo	PCA Valeo
VOLKSWAGEN (.../...)									
Jetta (2005>)	+/-			08/05 ▸	1K0819644A	**698800**	1K1819653A	**698801**	**▲701001**
Jetta (2005>)	+/-			08/05 ▸			1K2819653B	**715665**	
Lupo	+/-			10/98 ▸ 07/05	1H0819644B	**698159**	1J0819644A	**698716**	**▲701016**
Lupo	+/-		w/o Plastic Frame	10/98 ▸ 07/05	1H0819644B	**698885**			
New Beetle (98>2001)	+/-			11/98 ▸ 05/01	1H0819644B	**698159**	1J0819644A	**698716**	**▲701016**
New Beetle (98>2001)	+/-		w/o Plastic Frame	01/98 ▸ 05/01	1H0819644B	**698885**			
New Beetle (2001>2005)	+/-		w/o Plastic Frame	06/01 ▸ 06/05	1H0819644B	**698885**			
New Beetle (2001>2005)	+/-			06/01 ▸ 06/05	1H0819644B	**698159**	1J0819644A	**698716**	**▲701016**
New Beetle (2005>)	+/-		w/o Plastic Frame	07/05 ▸	1H0819644B	**698885**			
New Beetle (2005>)	+/-			07/05 ▸			1J0819644A	**698716**	**▲701016**
New Beetle (2011>)	+/-			07/11 ▸	1K0819644B	**698800**	1K1819653B	**698801**	**▲701001**
New Beetle (2011>)	+/-			07/11 ▸			1K2819653B	**715665**	
Passat (93>97)	+			10/93 ▸ 05/97	3A0819644	**698163**			
Passat (96>2000)	+/-			10/96 ▸ 09/00	8A0819439A	**698164**	8D0091800	**715578**	
Passat (2000>2005)	+/-			10/00 ▸	1H0819644A	**698679**	1H0091800	**698686**	
Passat (2005>)	+/-			03/05 ▸	1K0819644A	**698800**	1K1819653A	**698801**	**▲701001**
Passat (2005>)	+/-			03/05 ▸			1K2819653B	**715665**	
Passat CC	A+			05/08 ▸			1K2819653B	**715665**	
Passat CC	A+			05/08 ▸			1K1819653B	**698801**	**▲701001**
Phaeton	+		2x	05/02 ▸			3D0898644, 3D0819619A	**698793**	
Polo (94>99)	+/-			10/94 ▸ 10/99	1H0819644B	**698159**	1H0091800	**698686**	
Polo (94>99)	+/-		w/o Plastic Frame	10/94 ▸ 10/99	1H0819644B	**698885**			
Polo (99>2001)	+/-			10/99 ▸ 09/01	1H0819644B	**698159**	1J0819644A	**698716**	**▲701016**
Polo (99>2001)	+/-		w/o Plastic Frame	10/99 ▸ 09/01	1H0819644B	**698885**			
Polo (2001>2010)	+/-			10/01 ▸ 05/10	6Q0820367	**698685**	6Q0819653	**698739**	**▲701009**
Polo (2010>)	+/-			06/10 ▸	6R0820367	**•715737**	6R0819653	**•715727**	
Scirocco	+/-			08/08 ▸	1K0819644B	**698800**	1K1819653B	**698801**	**▲701001**
Sharan (95>2000)	+/-			08/95 ▸ 03/00	7M0819644	**698247**	7M3819644A	**698696**	
Sharan (2000>2010)	+/-			04/00 ▸ 07/10	7M0819644	**698247**	7M3819644A	**698696**	
Sharan (2010>)	+/-			08/10 ▸	1K0819644	**698800**	1K1819653B	**698801**	**▲701001**
Sharan (2010>)	+/-			08/10 ▸			1K2819653	**715665**	
Tiguan	+/-			09/07 ▸	1K0819644A	**698800**	1K1819653A	**698801**	**▲701001**
Tiguan	+/-			09/07 ▸			1K2819653B	**715665**	
Touareg	+			11/02 ▸	7H0819631	**715581**	7H0819631A	**698768**	
Touareg II	+/-			01/10 ▸			7P0819631	**715704**	
Touran	+/-			02/03 ▸	1K0819644A	**698800**	1K1819653A	**698801**	**▲701001**
Touran	+/-			02/03 ▸			1K2819653A	**715665**	
Touran Heros	+/-			05/10 ▸	1K0819644A	**698800**	1K1819653A	**698801**	**▲701001**
UP	+/-			08/11 ▸	1S0820367	**•715744**			
Vento	+/-			11/91 ▸ 07/93	1H0819644B	**698160**			
Vento	+/-			11/91 ▸ 12/97	1H0819644B	**698159**	1H0091800	**698686**	
Vento	+/-		w/o Plastic Frame	11/91 ▸ 12/97	1H0819644B	**698885**			
VOLKSWAGEN									
Caddy (95>2004)	+/-			11/95 ▸ 01/04	1H0819644B	**698159**	1H0091800	**698686**	
Caddy (95>2004)	+/-		w/o Plastic Frame	11/95 ▸ 01/04	1H0819644B	**698885**			
Caddy (2004>)	-			02/04 ▸	1K0819644A	**698800**			
Caddy (2004>)	+			02/04 ▸			1K1819653A	**698801**	**▲701001**

• **New** Nouveau **Neu** Nuevo **Novo** Nuovo **Nieuw** Nowi **Новый** Novy **Nou** Yeni **Νέους**

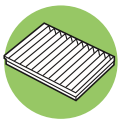

	A/C				PA OE	PA Valeo	CA OE	CA Valeo	PCA Valeo
VOLKSWAGEN (.../...)									
Caddy (2004>)	+/-			02/04 ▸			1K2819653B	**715665**	
Caddy IV (2010>)	+/-			05/11 ▸			1K2819653B	**715665**	
Caddy IV (2010>)	+/-			05/11 ▸	1K0819644B	**698800**	1K1819653B	**698801**	**▲701001**
Caravelle	+			01/03 ▸	7H0819631	**715581**	7H0819631A	**698768**	
Crafter	+/-			04/06 ▸	2E0819638	**715601**	2E0819638A	**715602**	
LT (96>2003)	+/-			05/96 ▸ 04/02	2D0819638	**698840**			
LT (2003>2006)	+/-			06/03 ▸ 07/06	2D0819638A	**698840**			
Transporter (F70) (90>96)	+/-			11/92 ▸ 05/96	7D0819989	**698794**			
Transporter (F7D) (96>2003)	+/-			01/96 ▸ 06/03	7D0819989	**698794**			
Transporter (7J/7H) (2003>)	+/-			04/03 ▸	7H0819631	**715581**	7H0819631A	**698768**	
VOLVO									
850	+/-			06/91 ▸ 12/96	9171296	**698770**			
Cross Country	+			09/00 ▸	9204627	**715687**			
C30	+/-			10/06 ▸	8687389	**715627**	30676484	**715628**	
C70 (97>2006)	+			03/97 ▸ 12/05	9171296	**698770**			
C70 (2006>)	+			01/06 ▸	8687389	**715627**	30676484	**715628**	
S40 (95>2004)	+			10/95 ▸ 03/04	30612666	**698769**	30883952	**715676**	
S40 (95>2004)	-			10/95 ▸ 03/04	30818694	**715688**			
S40 (2004>)	+			03/04 ▸	8687389	**715627**	30676484	**715628**	
S60	+			08/00 ▸ 06/10	9204626	**698771**	9171756	**715512**	
S60	+			08/00 ▸	9204627	**715687**	9171757	**715571**	
S60 II	+/-			07/10 ▸	30733894	**715597**	30733893	**715702**	
S70	+			12/96 ▸ 11/00	9171296	**698770**			
S80	+			06/98 ▸ 12/06	9204626	**698771**	9171756	**715512**	
S80	+			06/98 ▸	9204627	**715687**	9171757	**715571**	
S80 II	+			01/07 ▸	30767022	**715597**	30767024	**715702**	
S90	+			01/97 ▸ 12/98	9171296	**698770**			
V40	+			10/95 ▸ 12/03	30612666	**698769**	30883952	**715676**	
V50	+			03/04 ▸	8687389	**715627**	30676484	**715628**	
V60	+/-			07/10 ▸	30733894	**715597**	30733893	**715702**	
V70 (96>99)	+			12/96 ▸ 12/99	9171296	**698770**			
V70 (2000>)	+			01/00 ▸	9204626	**698771**	9171756	**715512**	
V70 (2000>)	+			01/00 ▸	9204627	**715687**	9171757	**715571**	
V70 (2007>)	+/-			03/07 ▸	30767022	**715597**	30767024	**715702**	
XC 60	+/-			10/08 ▸	30733892	**715597**	30767024	**715702**	
XC 70 (97>99)	+			12/97 ▸ 12/99	9204627	**715687**			
XC 70	+			09/02 ▸			9171757	**715571**	
XC 70	+			09/02 ▸	9204626	**698771**	9171756	**715512**	
XC 70 (2000>2007)	+			01/00 ▸	9204627	**715687**			
XC 70 (2007>)	+/-			03/07 ▸	30767022	**715597**	30733893	**715702**	
XC 90 (2002>)	A+			05/02 ▸	9204626	**698771**	9171756	**715512**	
XC 90 (2002>)	A+			05/02 ▸	9204627	**715687**	9171757	**715571**	
VOLVO TRUCKS									
F6	+/-			10/87 ▸ 12/94	1584575	**716045**			
F7	+/-			08/78 ▸ 05/88	1584575	**716045**			
F10	+/-			08/77 ▸ 12/94	1584575	**716045**			

▲ **Soon available P/N** Références disponibles prochainement **Artikel in Kürze lieferbar** Referencias disponibles próximamente **Referências disponiveis próximamente** Riferimenti disponibili nei prossimi mesi **Binnenkort leverbaar** Produkt wkrótce dostępny **Позиции скоро будут доступны** Produkt brzy dostupny **Uskoro u prodaji** Referințele disponibile în curând **Очаквайте скоро** Yakında sunulacak **Κωδικούς σύντομα διαθέσιμα**

	A/C				PA OE	PA Valeo	CA OE	CA Valeo	PCA Valeo
VOLVO TRUCKS (.../...)									
F12	+/-			08/77 ▸ 09/91	1584575	**716045**			
F12	+/-			10/91 ▸ 12/94	8143691-7	**716041**	20409908	**716053**	
F16	+/-			10/87 ▸ 12/94	1584575	**716045**			
FH	+/-			09/05 ▸	8143691-7	**716041**	20409908	**716053**	
FH12	+/-			08/93 ▸ 12/05	8143691-7	**716041**	20409908	**716053**	
FH16 Serie	+/-			08/93 ▸	8143691-7	**716041**	20409908	**716053**	
FL	+/-			04/06 ▸	20559447	**716009**			
FL12	+/-			09/95 ▸ 10/98	1584575	**716045**			
FM-Serie	+/-			09/05 ▸	8143691-7	**716041**	20409908	**716053**	
FM7-Serie	+/-			08/98 ▸ 02/08	8143691-7	**716041**	20409908	**716053**	
FM9-Serie	+/-			11/01 ▸	8143691-7	**716041**	20409908	**716053**	
FM10-Serie	+/-			08/98 ▸	8143691-7	**716041**	20409908	**716053**	
FM12-Serie	+/-			11/01 ▸	8143691-7	**716041**	20409908	**716053**	

• **New** Nouveau **Neu** Nuevo **Novo** Nuovo **Nieuw** Nowi **Новый** Nový **Nou** Yeni **Νέους**

CLIM PUR'

CLIMPUR'

x1

Valeo 698984

AIR CONDITIONING CLEANER
NETTOYANT CLIMATISATION
KLIMASYSTEM-REINIGER
LIMPIADOR DEL CLIMATIZADOR
LIMPADOR DE AR CONDICIONADO
AIR CONDITIONING REINIGER
DETERGENTE CLIMATIZZAZIONE
śRODEK CZYSZCZĄCY DO KLIMATYZACJI
ČISTŽŽPROST EDEK PRO KLIMATIZACE
Sredstvo za čišćenje klimatizacije
KLÍMABERENDEZÉS TISZTÍTÓ SPRAY
Curăţitor de aer condiţionat
ОЧИСТИТЕЛЬ СИСТЕМЫ КОНДИЦИОНИРОВАНИЯ ВОЗДУХА
KLIMA TEMIZLEYICI
ΚΑΘΑΡΙΣΤΙΚΌ ΚΛΙΜΑΤΙΣΤΙΚΟ'Υ

Clim PUR' DISPLAY
PRESENTOIR Clim PUR'
Clim PUR' DISPLAY
EXPOSITOR Clim PUR'
DISPLAY Clim PUR'
CONFEZIONE Clim PUR'
DISPLAY Clim PUR'
дИСПЛЕЙ ДЛЯ БАЛЛОНОВ Clim PUR'
CLIM PUR DISPLEJ
CLIM PUR NA PRODAJNOM NOSAČU
KLÍMABERENDEZÉS TISZTÍTÓ SPRAY BEMUTATÓ TARTÓN
Afişare Clim Pur'
Clim Pur дисплей
Clim PUR' SERGILEME ÜNITESI
Σταντ Clim PUR'

Valeo 698985

(**x15** Clim PUR' - 698984)

(**x20** Clim PUR' - Workshops/Ateliers)

Valeo 698991

> **THINK ABOUT USING CLIM PUR' AT EACH CABIN FILTER CHANGE**
> PENSEZ À UTILISER CLIM PUR' À CHAQUE CHANGEMENT DU FILTRE HABITACLE
> **VERWENDEN SIE CLIMPUR' BEI JEDEM WECHSEL DES INNENRAUMLUFTFILTERS**
> PIENSE EN UTILIZAR CLIM PUR' EN CADA CAMBIO DE FILTRO DE HABITÁCULO
> **USE O "CLIMPUR" A CADA SUBSTITUIÇÃO DO FILTRO DE HABITÁCULO**
> RICORDATEVI DI UTILIZZARE IL "CLIM PUR" AD OGNI SOSTITUZIONE DEL FILTRO ABITACOLO
> **DENK OOK AAN HET GEBRUIK VAN DE "CLIM PUR" BIJ IEDERE VERVANGING VAN HET INTERIEURFILTER**
> SUGEROWANE STOSOWANIE "CLIMPUR" PRZY KAŻDORAZOWEJ WYMIANIE FILTRA KABIONOWEGO
> **Рекомендируем использовать «ClimPur'» с каждой обменой соллоного фильтра**
> POUŽÍVEJTE CLIM PUR' PŘI KAŽDÉ VÝMĚNĚ KABINOVÉHO FILTRU
> **UPOTREBLJAVAJTE "CLIM PUR" PRILIKOM SVAKE IZMJENE FILTERA KABINE**
> MINDEN POLLENSZŰRŐCSERE SORÁN HASZNÁLJON CLIM PUR-T.
> **Nu uitaţi să utilizaţi Clim Pur' la fiercare schimb de filtru**
> Помислете за ползите от подмяната на всеки филтър купе
> **KABIN FILTRESI DEĞIŞIMLERINDE "CLIMPUR" KULLANILMASI GEREKTIĞINI DIKKATE ALINIZ**
> Σκεφτείτε να χρησιμοποιήσετε το Clim Pur' σε κάθε αλλαγή του φίλτρου καμπίνας

CLIM SPRAY

CLIM SPRAY
x1

Valeo **698899**

CABIN CLEANER
PURIFIANT HABITACLE
INNENRAUM-LUFT-REINIGER
PURIFICADOR DE AIRE DEL HABITÁCULO
PURIFICADOR DO AR DO HABITÁCULO
DETERGENTE ABITACOLO
INTERIEUR VERFRISSER
ODŚWIEŁACZ KABINOWY
Очиститель воздуха
ČISTIČ INTERIÉRU VOZU
ČISTAČ KABINE VOZILA
UTASTÉR LÉGTISZTÍTÓ SPRAY
PURIFICATOR HABITACLU
Почистващ въздуха на купето препарат
K BIN H V TEMIZLEYICISI
ΚΑΘΑΡΙΣΤΗΣ ΚΑΜΠΙΝΑΣ

CLIM SPRAY DISPLAY
***PRESENTOIR* CLIM SPRAY**
CLIM SPRAY DISPLAY
***EXPOSITOR* CLIM SPRAY**
DISPLAY CLIM SPRAY
***CONFEZIONE* CLIM SPRAY**
DISPLAY CLIM SPRAY
CLIM SPRAY DISPLEJ
дИСПЛЕЙ ДЛЯ БАЛЛОНОВ CLIM SPRAY
CLIM SPRAY NA PRODAJNOM NOSAČU
UTASTÉR LÉGTISZTÍTÓ SPRAY BEMUTATÓ TARTÓN
AFIŞARE CLIM SPRAY
CLIM SPRAY дисплей
CLIM SPRAY *SERGILEME ÜNITESI*
Σταντ **CLIM SPRAY**

Valeo **715899**

(**x15** CLIM SPRAY - 698899)

(**x20** CLIM SPRAY - Workshops/Ateliers)

Valeo **715991**

> **THINK ABOUT USING CLIM SPRAY EVERY 6 MONTHS**
> PENSEZ A UTILISER CLIM SPRAY TOUS LES 6 MOIS
> **DENKEN SIE DARAN, CLIMSPRAY ALLE 6 MONATE ZU BENUTZEN**
> RECOMENDAMOS LA UTILIZACIÓN DEL CLIM SPRAY CADA 6 MESES
> **RECOMENDAMOS A UTILIZAÇÃO DO CLIM SPRAY A CADA 6 MESES**
> SI CONSIGLIA L'UTILIZZO DEL CLIM SPRAY OGNI 6 MESI
> **DENK ER AAN: GEBRUIK CLIM SPRAY OM DE 6 MAANDEN !!!!!**
> PAMIĘTAJ ABY UŻYWAĆ CLIMSPRAY CO 6 MIESIĘCY
> **Подумайте об использовании Clim Spray каждые 6 месяцев**
> POUŽÍVEJTE CLIM SPRAY KAŽDÝCH 6 MĚSÍCŮ
> **PREPORUČAMO KORISTITI CLIM SPRAY SVAKIH 6 MJESECI**
> AJÁNLATOS A CLIM SPRAY-T RENDSZERESEN, 6 HAVONTA HASZNÁLNI
> **Nu uitati sa utilizati Clim Spray la fiecare 6 luni**
> Помислете за ползите от използването на спрей за почистване на всеки 6 месеца
> **6 YD BİR CLIM SPR Y KULL NM YI UNUTM YINIZ**
> Σκεφτείτε τη χρήση του Clim Spray κάθε 6 μήνες.

Valeo

Valeo 716002

clim PUR™
x1

AIR CONDITIONING CLEANER
NETTOYANT CLIMATISATION
KLIMASYSTEM-REINIGER
LIMPIADOR DEL CLIMATIZADOR
LIMPADOR DE AR CONDICIONADO
AIR CONDITIONING REINIGER
DETERGENTE CLIMATIZZAZIONE
ŚRODEK CZYSZCZĄCY DO KLIMATYZACJI
ОЧИСТИТЕЛЬ СИСТЕМЫ КОНДИЦИОНИРОВАНИЯ ВОЗДУХА
ČISTIČ KLIMATIZACE
Sredstvo za čišćenje klimatizacije
KLÍMABERENDEZÉS TISZTÍTÓ SPRAY
Curățitor de aer condiționat
KLİMA TEMİZLEYİCİ
ΚΑΘΑΡΙΣΤΙΚΟ ΚΛΙΜΑΤΙΣΤΙΚΟΥ

Valeo 716003

clim SPRAY™
x1

CABIN CLEANER
PURIFIANT HABITACLE
INNENRAUM-LUFT-REINIGER
PURIFICADOR DE AIRE DEL HABITÁCULO
PURIFICADOR DO AR DO HABITÁCULO
INTERIEUR VERFRISSER
DETERGENTE ABITACOLO
ODŚWIEŻACZ KABINOWY
Очиститель воздуха
ČISTIČ INTERIÉRU VOZU
ČISTAČ KABINE VOZILA
UTASTÉR LÉGTISZTÍTÓ SPRAY
PURIFICATOR HABITACLU
Почистващ въздуха на купето препарат
KABİN HAVA TEMİZLEYİCİSİ
ΚΑΘΑΡΙΣΤΙΚΟ ΚΑΜΠΙΝΑΣ

Pour/For

New Nouveau **Neu** Nuevo **Novo** Nuovo **Nieuw** Nowi **Yeni** Новый

r o l l media

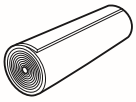

x1

Height / Hauteur : 2 m
Length / Longueur : 20 m
Thickness / Largeur : 11 mm - 14 mm
Diameter / Diamètre : 0.65 m
Complete surface dimension / Dimension surface totale : 40 m²

Valeo **716051**

BUS UNIVERSAL FILTER ROLL MEDIA FOR INTERIOR AND EXTERIOR AIR DISTRIBUTION
ROULEAU DE MÉDIA FILTRANT UNIVERSEL POUR BUS, INTÉRIEUR ET EXTÉRIEUR
BUS UNIVERSELLES FILTER ROLLMITTEL FÜR VERTEILUNG VON INNEN- UND AUßENLUFT
ROLLO DE MATERIAL FILTRANTE UNIVERSAL PARA AUTOBUS, DISTRIBUCIÓN DEL AIRE INTERIOR Y EXTERIOR
ROLO DE MATERIAL FILTRANTE UNIVERSAL PARA AUTOCARRO, DISTRIBUIÇÃO DE AR INTERIOR E EXTERIOR
ROTOLO FILTRO ABITACOLO A METRO UNIVERSALE PER BUS PER CLIMATIZZAZIONE
ROL MET UNIVERSEEL AUTOBUS FILTERMATERIAAL, INTERIEUR EN EXTERIEUR
BUS UNIVERSALNE ZROLOWANE MEDIUM FITRUJĄCE
АВТОБУС УНИВЕРСАЛЬНЫЙ РУЛОН СО СВЕРНУТЫМ ФИЛЬТРОМ ДЛЯ ФИЛЬТРАЦИИ НАРУЖНОГО И ВНУТРИСАЛОННОГО ВОЗДУХА
Univerzálny filtračn materiál pre autobusy, interné a externé rozvody vzduchu
Univerzální stočená filtrovací tkanina pro autobusy, vnejší i vnitří přívody vzduchu
Univerzalni materijal za filtriranje, namijenjen za autobuse u unutra njoj i vanjskoj instalaciji zraka
BUS univerzális feltekerhető szűrő anyag külső és belső levegőszállításhoz
Rulou de material filtrant / filtru universal pentru distribuţie de aer interior ţi extorior pentru bus
OTOBÜS ÜNIVERSAL FILTRE. RULO MALZEME. DIŞ HAVA VE DAHILI ÇEVIRIM FILTRELEMESI Διεθνές ρολό φίλτρου για λεωφορεία. Κατάλληλο για εσωτερική και εξωτερική χρήση, στο σύστημα εξαερισμού του οοχήματος.

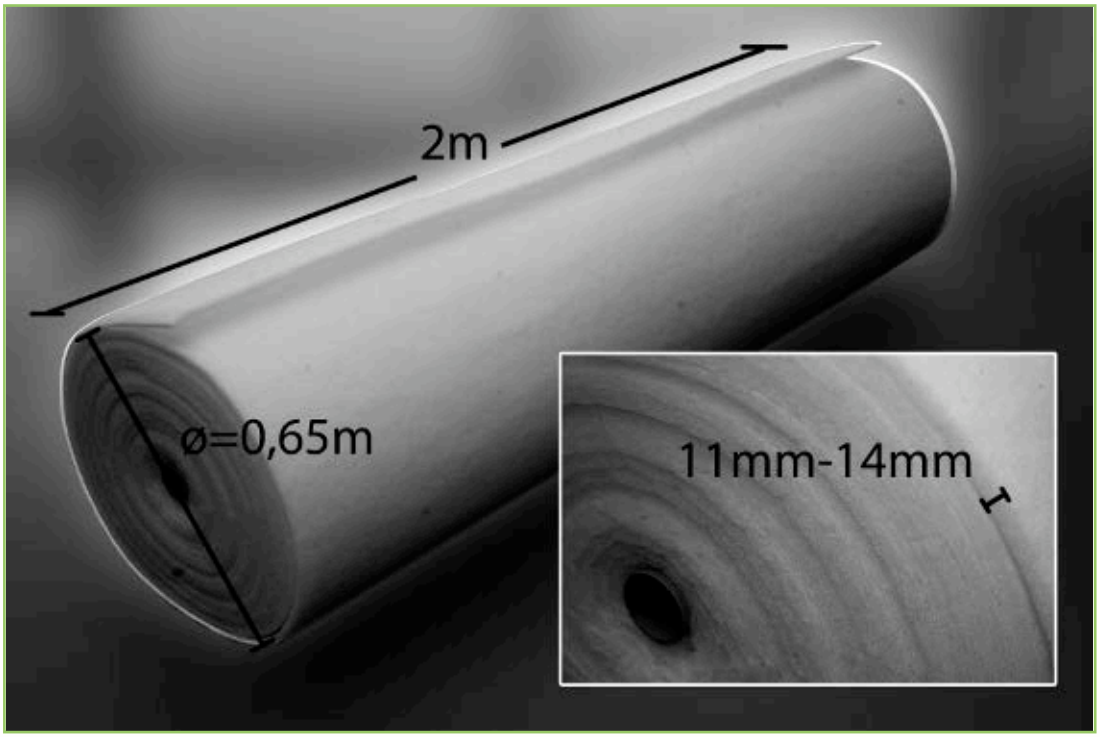

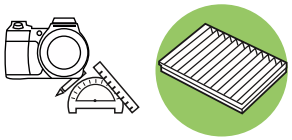

Valeo 698146 PA

CITROËN	6447Z4
PEUGEOT	6447Z5

Valeo 698149 PA

RENAULT	7700845811

Valeo 698159 PA

AUDI	1H0819644B
SEAT	1H0819644B
SKODA	1H0819644B
VOLKSWAGEN	1H0819644B

Valeo 698160 PA

AUDI	1H0819644B
VOLKSWAGEN	1H0819638

Valeo 698163 PA

VOLKSWAGEN	3A0819644

Valeo 698164 PA

AUDI	8A0819439
AUDI	8A0819439A
VOLKSWAGEN	8A0819439A

Valeo 698165 PA

OPEL	6808600
VAUXHALL	9200067
VAUXHALL	90509367

Valeo 698166 PA

OPEL	1808604
VAUXHALL	90509367

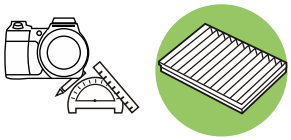

Valeo 698167 PA

OPEL	1808605
VAUXHALL	90510338

Valeo 698168 PA

FORD	1097670
FORD	7180932

Valeo 698169 PA

CHRYSLER	5101438AA
MERCEDES	2028300018
MERCEDES	2028300318

Valeo 698170 PA

BMW	64311390836

Valeo 698171 PA

BMW	64119069895

Valeo 698173 PA

RENAULT	7700834816

Valeo 698174 PA

ALFA ROMEO	46721923
FIAT	71712596
LANCIA	71712595

Valeo 698175 PA

RENAULT	7700846236

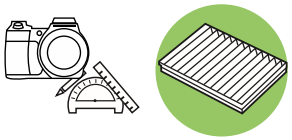

Valeo 698176 PA

RENAULT	7700845219

Valeo 698177 PA

RENAULT	7700845222

Valeo 698196 PA

MG	JKR100020
ROVER	JKR100020

Valeo 698197 PA

ALFA ROMEO	60653641
FIAT	46442422
LANCIA	46442422

Valeo 698198 PA

FIAT	46721374
LANCIA	46721374

Valeo 698199 PA

ALFA ROMEO	7797229
FIAT	60811242
LANCIA	82398550
SAAB	9625674

Valeo 698201 PA

FORD	1004051
MAZDA	1E0061J6X

Valeo 698202 PA

OPEL	1808607
VAUXHALL	90512779

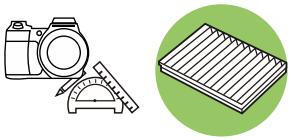

Valeo 698203 PA

PEUGEOT	6447S5
PORSCHE	99657221901

Valeo 698255 PA

DACIA	7700424098
NISSAN	B729800QAA
RENAULT	7701042499

Valeo 698235 PA

PEUGEOT	644793

Valeo 698276 PA

RENAULT	7700424093

Valeo 698246 CA

BMW	64319069927

Valeo 698279 PA

RENAULT	7700428820

Valeo 698247 PA

FORD	7420372
SEAT	7M0819644
VOLKSWAGEN	7M0819644

Valeo 698290 PA

RENAULT	6025370624

Valeo 698454 PA

FIAT 46794399

Valeo 698487 PA

FORD 1062253

Valeo 698469 PA

BMW 64319071933

Valeo 698488 PA

PEUGEOT 6447AZ

Valeo 698470 CA

BMW 64319070072

Valeo 698489 PA

BMW 64311000004

Valeo 698475 PA

MERCEDES 1688300018

Valeo 698512 PA

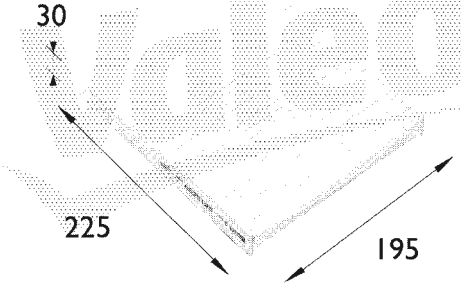

RENAULT 7701047513

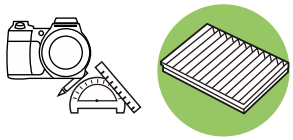

698535 PA

FIAT	46722862
FIAT	46770834

698606 PA

AUDI	8E0819439

698540 PA

CITROËN	6447HT

698657 PA

CITROËN	6447HP
PEUGEOT	6447KR

698541 CA

CITROËN	6447HV

698662 PA

OPEL	6808606
VAUXHALL	13175553
VAUXHALL	90520689

698594 PA

RENAULT	7701048748

698663 PA

OPEL	6808611
VAUXHALL	90559549
VAUXHALL	93182436

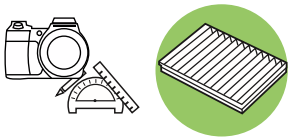

Valeo 698664 — PA

CITROËN	6447NT
PEUGEOT	6447KK

Valeo 698682 — CA

AUDI	4B0819439A

Valeo 698679 — PA

VOLKSWAGEN	1H0819644A

Valeo 698683 — CA

AUDI	4B0819439C

Valeo 698680 — PA

CITROËN	6447FF

Valeo 698684 — CA

AUDI	4A0819439A

Valeo 698681 — PA

SCION	8856852010
TOYOTA	8856852010

Valeo 698685 — PA

AUDI	6Q0820367
SEAT	6Q0820367
SKODA	6Q0820367
VOLKSWAGEN	6Q0820367

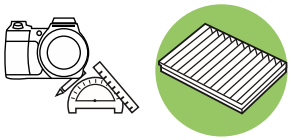

Valeo 698686 CA

AUDI
SEAT
SKODA
VOLKSWAGEN 1H0091800

Valeo 698687 CA

ALFA ROMEO 60815647
FIAT 46768502
IVECO 500314688
LANCIA 60815647

Valeo 698688 CA

ALFA ROMEO 60814643
LANCIA 60814643
MASERATI 573228900

Valeo 698689 PA

ALFA ROMEO 60653642
FIAT 46412715

Valeo 698690 PA

FIAT 7079682

Valeo 698691 PA

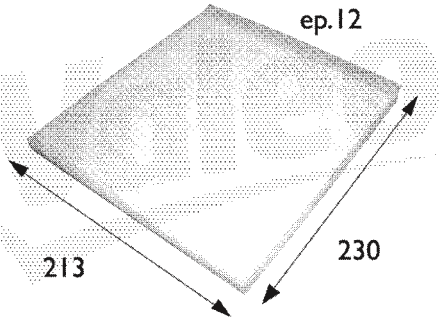

FIAT 7078711

Valeo 698692 CA

FIAT 46723435

Valeo 698693 CA

FORD 1204464
FORD 1353269

Valeo 698694 PA

FORD	1204459

Valeo 698695 CA

FORD	1139654

Valeo 698696 CA

FORD	1113627
FORD	1148366
SEAT	7M3819644
VOLKSWAGEN	7M3819644A

Valeo 698697 CA

CHRYSLER	5101439AA
MERCEDES	2108300818

Valeo 698700 PA

MERCEDES	2038300118

Valeo 698701 PA

MERCEDES	2038300218

Valeo 698702 PA

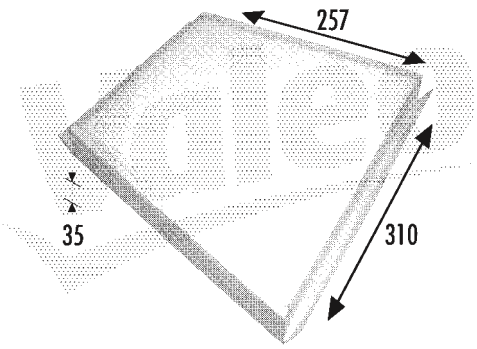

MERCEDES	2118300218

Valeo 698703 CA

MERCEDES	1408350147

Valeo 698704 PA

MERCEDES 1408350047

Valeo 698705 CA

MERCEDES 1408350247

Valeo 698706 PA

MERCEDES 1408350547

Valeo 698707 PA

FORD	5029916
NISSAN	278932F900
NISSAN	278939F500

Valeo 698708 CA

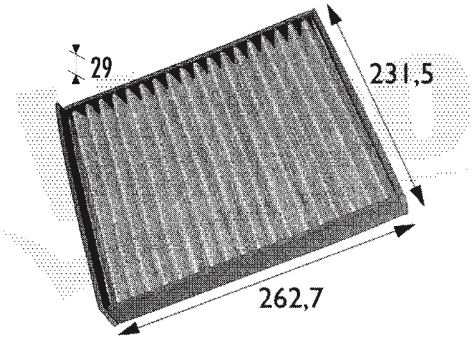

OPEL	1718042
VAUXHALL	91132364

Valeo 698710 CA

FIAT	46844822
OPEL	1808624
SAAB	9179905
VAUXHALL	93172129

Valeo 698711 PA

OPEL	6808601
OPEL	1808619
SAAB	93172129
VAUXHALL	93172299

Valeo 698712 PA

OPEL	1808609
VAUXHALL	52470574

698713 CA

PEUGEOT 6447GW

698723 CA

SAAB 12758727

698714 CA

CITROËN 6447NV
PEUGEOT 6447KL

698724 PA

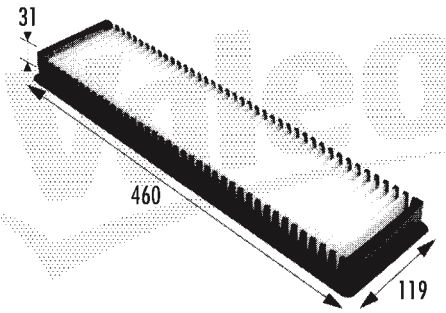

MINI 64311496710

698715 CA

RENAULT 7701048749

698725 CA

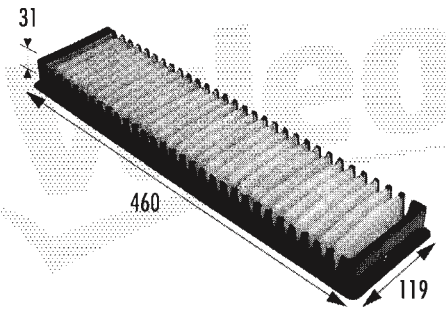

MINI 64311496711

698716 CA

AUDI 1J0819644A
SEAT 1J0819644
SKODA 1J0819644A
VOLKSWAGEN 1J0819644A

698730 PA

RENAULT 7701055109

Valeo 698731 PA

CITROËN	6447FG

Valeo 698734 PA

NISSAN	27891BM401

Valeo 698735 PA

HONDA	80292S5A003

Valeo 698736 PA

RENAULT	7701055110

Valeo 698737 CA

RENAULT	7701056390

Valeo 698738 PA

CITROËN	6447LZ
FIAT	1484383080
LANCIA	1484383080
PEUGEOT	6447LY

Valeo 698739 CA

AUDI	6Q0819653
MERCEDES	4638300018
SEAT	6Q0819653
SKODA	6Q0819653
VOLKSWAGEN	6Q0819653

Valeo 698740 CA

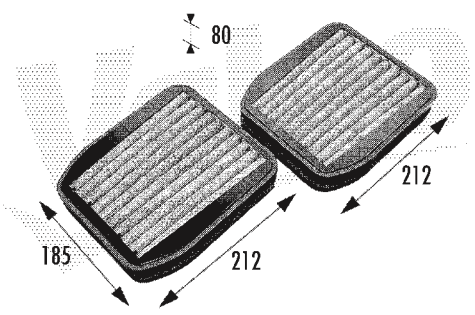

MERCEDES	2118300818

Valeo 698741 CA

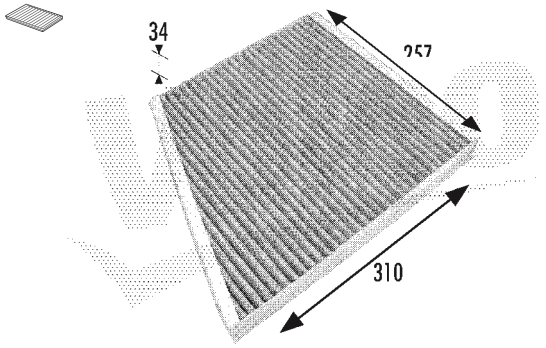

MERCEDES	2118300018

Valeo 698742 CA

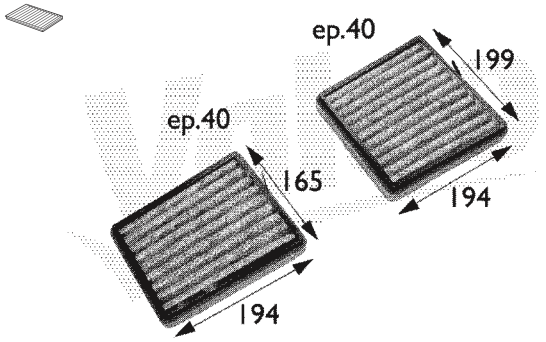

MERCEDES	2038300518

Valeo 698743 CA

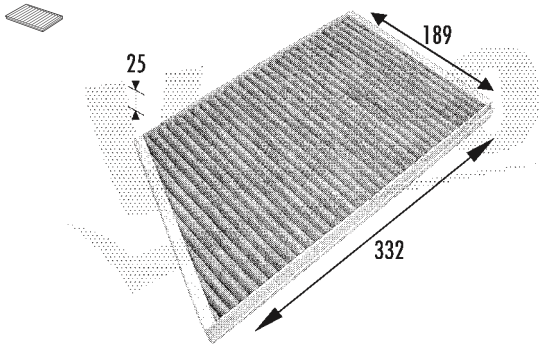

MERCEDES	2038300918

Valeo 698744 CA

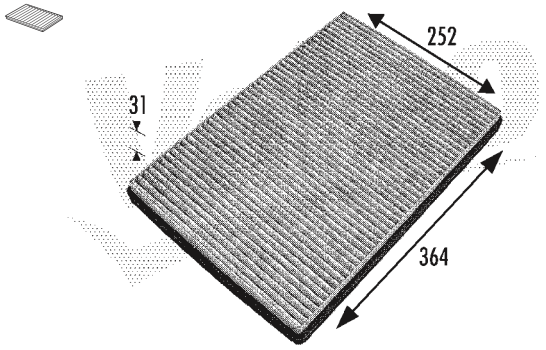

MERCEDES	1688300818

Valeo 698745 CA

FORD	1119616
JAGUAR	C2S8622

Valeo 698746 CA

OPEL	1808614
VAUXHALL	9192320

Valeo 698747 CA

ALFA ROMEO	46799653

Valeo 698748 CA

PEUGEOT	6447PG
PORSCHE	99657121902
PORSCHE	99657121903
PORSCHE	99757121900

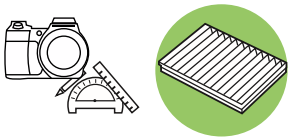

Valeo 698749 CA

PEUGEOT	6447PE

Valeo 698750 CA

BMW	64319071935

Valeo 698751 CA

LANCIA	46723024

Valeo 698753 PA

NISSAN	27891AX010
RENAULT	7701062227

Valeo 698762 PA

FORD	4042703

Valeo 698768 CA

AUDI	7H0819631A
PORSCHE	95557221910
VOLKSWAGEN	7H0819631A

Valeo 698769 PA

VOLVO	30612666
VOLVO	30818694

Valeo 698770 PA

VOLVO	9171296

Valeo 698771 PA

VOLVO	9204626

Valeo 698775 PA

BMW	64318409043
LAND ROVER	

Valeo 698772 CA

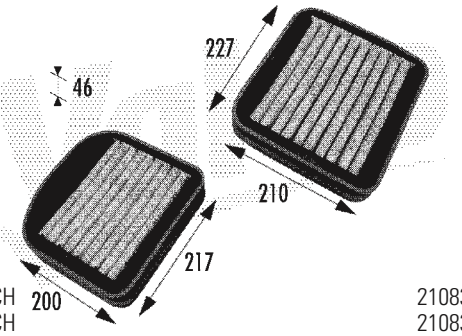

MAYBACH	2108300218
MAYBACH	2108301118
MERCEDES	2108300218
MERCEDES	2108301118

Valeo 698776 CA

BMW	64318409044
LAND ROVER	JMO000010

Valeo 698773 PA

OPEL	4705463
SUBARU	9586078F000
SUZUKI	9586078F10
VAUXHALL	9196805

Valeo 698777 PA

MERCEDES	1638350247

Valeo 698774 CA

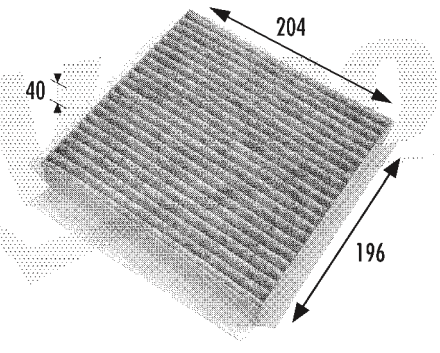

SMART	0001110V004

Valeo 698778 CA

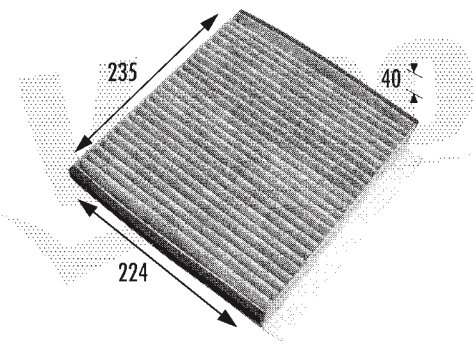

MERCEDES	1638350047

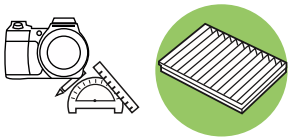

Valeo 698779 PA

FORD	1119613
JAGUAR	C2S8619

Valeo 698790 PA

AUDI	4D0819439

Valeo 698791 CA

AUDI	4D0819439A

Valeo 698792 CA

AUDI	4E0819439A

Valeo 698793 CA

BENTLEY	3D0898644, 3D0819619A
VOLKSWAGEN	3D0898644, 3D0819619A

Valeo 698794 PA

VOLKSWAGEN	7D0819989

Valeo 698795 PA

TOYOTA	8856802030

Valeo 698796 PA

SUBARU	72880AG000
TOYOTA	871394701083

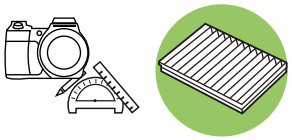

Valeo 698797 PA

MERCEDES

Valeo 698799 PA

LAND ROVER	JKR100200

Valeo 698800 PA

AUDI	1K0819644A
SEAT	1K0819644A
SKODA	1K0819644A
VOLKSWAGEN	1K0819644A

Valeo 698801 CA

AUDI	1K1819653A
SEAT	1K1819653A
SKODA	1K1819653A
VOLKSWAGEN	1K1819653A

Valeo 698802 CA

SMART	0013871V001
MITSUBISHI	MR958017

Valeo 698815 PA

PEUGEOT	6447K6

Valeo 698817 PA

LAND ROVER	JKR100280

Valeo 698819 PA

HONDA	79831ST3E01
MG	JKR100220
ROVER	JKR100220
ROVER	JKX100010

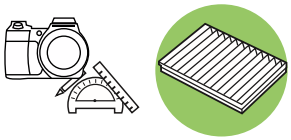

Valeo 698838 PA

BMW 64319069926

Valeo 698857 CA

BMW 64116921019
ROLLS ROYCE 64116921019

Valeo 698839 CA

FIAT 46723245

Valeo 698858 PA

CITROËN 6447SY
FIAT 1312766080
PEUGEOT 6447SY

Valeo 698840 PA

MERCEDES 9018300018

Valeo 698859 PA

DAEWOO 96297422

Valeo 698856 PA

BMW 64116921018

Valeo 698860 PA

CHEVROLET 96190645
DAEWOO 96190645

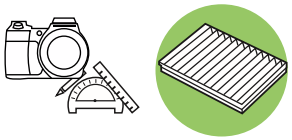

Valeo 698861 — PA

BMW	64316915763

Valeo 698865 — CA

CHRYSLER	82205905

Valeo 698862 — CA

BMW	64316915764

Valeo 698866 — PA

FIAT	46723321

Valeo 698863 — PA

BMW	64316935822

Valeo 698867 — PA

FIAT	46723331
LANCIA	46723331

Valeo 698864 — CA

BMW	64316935823

Valeo 698868 — PA

HONDA	80292SDCA01

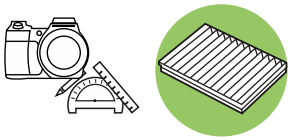

Valeo 698869 PA

HONDA	80290ST3E01
ROVER	JKR100080

Valeo 698870 PA

MAZDA	GJ6A61P11A

Valeo 698871 PA

MERCEDES	6398350247

Valeo 698872 CA

MERCEDES	6398350347

Valeo 698873 CA

NISSAN	272773Y525

Valeo 698874 PA

OPEL	6808606

Valeo 698875 CA

OPEL	6808607

Valeo 698876 PA

OPEL	6808604
VAUXHALL	93174800

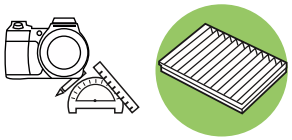

Valeo 698877 — CA

OPEL	6808605
VAUXHALL	93174801

Valeo 698878 — PA

RENAULT	7701409324

Valeo 698879 — PA

MG	JKR100180
ROVER	JKR100180

Valeo 698880 — PA

MG	JKR000040
ROVER	JKR000040

Valeo 698882 — PA

FORD	1315686

Valeo 698883 — CA

FORD	1315687

Valeo 698884 — CA

CITROËN	6447TC
PEUGEOT	6447RG

Valeo 698885 — PA

AUDI	1H0819644B
SEAT	1H0819644B
SKODA	1H0819644B
VOLKSWAGEN	1H0819644B

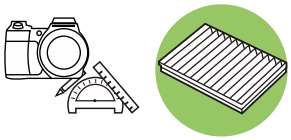

Valeo 698886 — PA

FIAT	71743821
HONDA	80291SAAE01
SUZUKI	9586062J000

Valeo 698888 — PA

HYUNDAI	9761938100
KIA	9761938100

Valeo 698889 — PA

KIA	971143B100

Valeo 698890 — CA

MAZDA	CB1261J6X

Valeo 698891 — PA

MAZDA	GE6T61J6X

Valeo 698892 — PA

MAZDA	BP4K61J6X
MAZDA	CC2961J6X

Valeo 698893 — PA

FORD	4416570
MAZDA	EC1361J6XA

Valeo 698894 — PA

SUZUKI	9586165D000

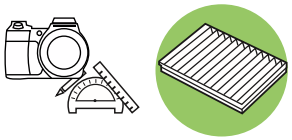

Valeo 698895 — PA

KIA

971332F000

Valeo 701003 — PCA

ABARTH
ALFA ROMEO
FIAT
OPEL
VAUXHALL

Valeo 701000 — PCA

PEUGEOT

Valeo 701004 — PCA

FORD

Valeo 701001 — PCA

AUDI
SEAT
SKODA
VOLKSWAGEN

Valeo 701005 — PCA

FORD

Valeo 701002 — PCA

CITROËN
PEUGEOT

Valeo 701006 — PCA

RENAULT

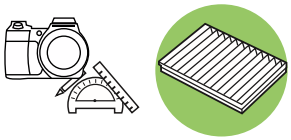

Valeo 701007 PCA

CITROËN
PEUGEOT

Valeo 701008 PCA

OPEL
VAUXHALL

Valeo 701009 PCA

AUDI
MERCEDES
SEAT
SKODA
VOLKSWAGEN

Valeo 701010 PCA

CADILLAC
FIAT
OPEL
SAAB
VAUXHALL

Valeo 701011 PCA

FORD

Valeo 701012 PCA

RENAULT

Valeo 701013 PCA

CITROËN
FIAT
LANCIA
PEUGEOT

Valeo 701014 PCA

CITROËN
PEUGEOT

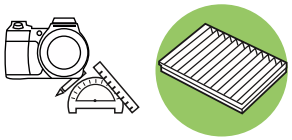

Valeo 701015 PCA

RENAULT

Valeo 701016 PCA

AUDI
SEAT
SKODA
VOLKSWAGEN

Valeo 701017 PCA

ALFA ROMEO

Valeo 701018 PCA

NISSAN
RENAULT

Valeo 701019 PCA

BMW

Valeo 701020 PCA

AUDI
VOLKSWAGEN

Valeo 701021 PCA

LEXUS
SUBARU
TOYOTA

Valeo 701023 PCA

AUDI
SEAT

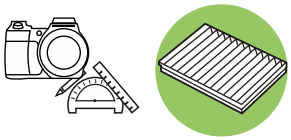

Valeo 715500 PA

AUDI	4F0819439
LAMBORGHINI	4F0819439

Valeo 715501 CA

AUDI	4F0819439A
LAMBORGHINI	4F0819439A

Valeo 715502 PA

BMW	64316946629

Valeo 715503 CA

BMW	64316946628

Valeo 715504 CA

JAGUAR	C2C6884

Valeo 715505 CA

JAGUAR	XR830254

Valeo 715506 PA

MERCEDES	1698300118

Valeo 715507 CA

MERCEDES	1698300218

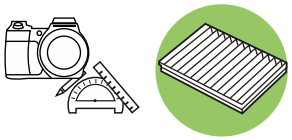

Valeo 715508 — CA

MERCEDES	1718300418

Valeo 715509 — CA

MITSUBISHI	MZ360034

Valeo 715510 — PA

FORD	1354952
VOLVO	8687389

Valeo 715511 — CA

FORD	1395953
VOLVO	30676484

Valeo 715512 — CA

VOLVO	9171756

Valeo 715513 — PA

NISSAN	2729800QAA
OPEL	4408840
RENAULT	7701050319
VAUXHALL	91160128

Valeo 715514 — PA

SAAB	5047113

Valeo 715515 — PA

CITROËN	6447TV
PEUGEOT	6447TT
TOYOTA	885080H010

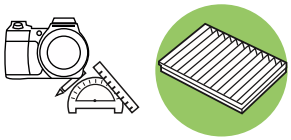

Valeo 715516 PA

HYUNDAI	9761037000
HYUNDAI	9761725000

Valeo 715517 PA

HYUNDAI	971332D000

Valeo 715518 PA

LAND ROVER	JKR500010

Valeo 715519 CA

LAND ROVER	JKR500020

Valeo 715520 PA

NISSAN	27274EA000

Valeo 715521 PA

HYUNDAI	971332E200
KIA	0K9A46452XA
KIA	971332E200

Valeo 715522 PA

KIA	0K2FA6152X

Valeo 715523 PA

KIA	0K9A56152XA
KIA	97619FD200

Valeo 715524 PA

KIA	9713307000

Valeo 715525 PA

HYUNDAI	976171C000

Valeo 715526 PA

CHEVROLET	96554421
DAEWOO	96554421

Valeo 715527 PA

HYUNDAI	97030H1726

Valeo 715528 PA

MITSUBISHI	MR315876

Valeo 715529 PA

HYUNDAI	976193D100, 976193D200

Valeo 715530 PA

CITROËN	6447H0, 6447H1
FIAT	1475478080, 1475479080
LANCIA	1475478080, 1475479080
PEUGEOT	6447P2, 6447P3

Valeo 715531 PA

MAYBACH	2108300018
MERCEDES	2108301018

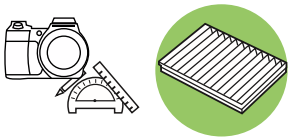

Valeo 715532 PA

ALFA ROMEO	77363481

Valeo 715533 CA

ALFA ROMEO	77363370

Valeo 715534 PA

CHRYSLER	50580040AA

Valeo 715535 PA

CHEVROLET	96539649
DAEWOO	96539649

Valeo 715536 PA

CHEVROLET	93740495
DAEWOO	93740495

Valeo 715537 CA

DODGE	5058381AA
JEEP	5058381AA

Valeo 715538 CA

RENAULT	7711228912

Valeo 715539 CA

RENAULT	7701064235

715540 PA

HONDA 80292SMGE01

715541 PA

HYUNDAI 971333K000
KIA 971333K000

715542 PA

LEXUS 8713930010
LEXUS 8713948020
LEXUS 8713950010
TOYOTA 8713930010

715543 PA

MITSUBISHI MR227823

715544 CA

MERCEDES 1648300218

715545 PA

MITSUBISHI XR315172

715546 PA

MITSUBISHI MR398288

715547 PA

MITSUBISHI MR360889

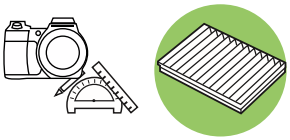

Valeo 715548 PA

MITSUBISHI	MZ311917

Valeo 715549 PA

NISSAN	278936F600

Valeo 715551 PA

SUBARU	72880FE000

Valeo 715552 PA

ABARTH	55702456
ALFA ROMEO	55702456
FIAT	55702456
OPEL	6808622
VAUXHALL	55702456

Valeo 715553 CA

ALFA ROMEO	55702468
FIAT	55702456
OPEL	6808623

Valeo 715554 PA

CITROËN	6447XF
PEUGEOT	6447XF

Valeo 715555 CA

CITROËN	6447XG
PEUGEOT	6447XG

Valeo 715556 PA

PEUGEOT	6447VY

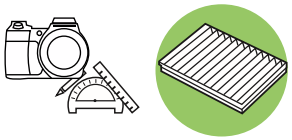

Valeo 715557 — CA

PEUGEOT	6447VX

Valeo 715558 — CA

CITROËN	6447SP
FIAT	1483883080
FIAT	9655190480
LANCIA	9655190480
PEUGEOT	6447TA

Valeo 715559 — PA

NISSAN	27277EN000
NISSAN	27277EN025

Valeo 715560 — CA

INFINITY	27277CL025H
NISSAN	27277CL025H

Valeo 715561 — PA

INFINITY	272747J125
NISSAN	272747J125

Valeo 715562 — PA

RENAULT	7701056389

Valeo 715563 — PA

SUBARU	G3210AE000

Valeo 715564 — PA

SUZUKI	9586154500

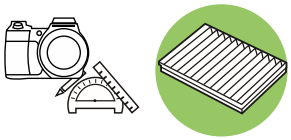

Valeo 715565 PA

TOYOTA	8850812010

Valeo 715566 PA

SSANGYONG	6923005400

Valeo 715567 PA

SSANGYONG	6923005410

Valeo 715568 CA

RENAULT	6025372486

Valeo 715569 PA

ISUZU	8971708040
OPEL	1808613
VAUXHALL	97170804

Valeo 715570 PA

CITROËN	647904
PEUGEOT	647904

Valeo 715571 CA

VOLVO	9171757

Valeo 715572 PA

TOYOTA	8888020060
TOYOTA	8888020020

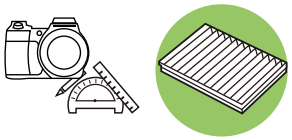

Valeo 715573 PA

HONDA	79370S1AG01

Valeo 715574 PA

MAZDA	LDY461J6X

Valeo 715575 PA

NISSAN	272751N6P6

Valeo 715576 PA

MAZDA	DC2161J6X

Valeo 715577 PA

MERCEDES	0018353047
MERCEDES	6388350047

Valeo 715578 CA

AUDI	8D0091800

Valeo 715579 PA

AUDI	8K0819439

Valeo 715580 CA

AUDI	8K0819439A

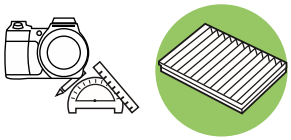

Valeo 715581 PA

AUDI	7H0819631
VOLKSWAGEN	7H0819631

Valeo 715582 CA

BMW	64106907746

Valeo 715583 PA

BMW	64316945585

Valeo 715584 CA

BMW	64316945586

Valeo 715585 PA

MINI	64319127516

Valeo 715586 CA

MINI	64319127515

Valeo 715587 PA

CHEVROLET	96296618
CHEVROLET	96327366

Valeo 715588 PA

CHEVROLET	96425700
DAEWOO	96425700

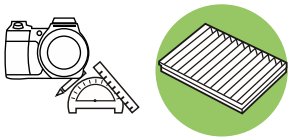

Valeo 715589 PA

CITROËN	6441G9
PEUGEOT	644191

Valeo 715590 PA

DAIHATSU	99906-850M2-036

Valeo 715591 PA

HYUNDAI	971332D200

Valeo 715592 PA

HYUNDAI	971331E000

Valeo 715593 PA

HONDA	80291S84A01

Valeo 715594 PA

HONDA	80291S2HE01,08R79S2H600

Valeo 715595 PA

IVECO	3802821

Valeo 715597 PA

LAND ROVER	LR000899
VOLVO	30767022

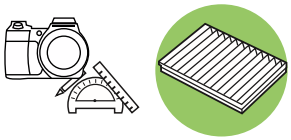

Valeo 715598 PA

LAND ROVER	BTR8037

Valeo 715599 PA

MAZDA	GE7B61J6XA

Valeo 715600 CA

MERCEDES	2048300018

Valeo 715601 PA

MERCEDES	9068300218
VOLKSWAGEN	2E0819638

Valeo 715602 CA

MERCEDES	9068300318
VOLKSWAGEN	2E0819638A

Valeo 715603 PA

MITSUBISHI	MR958016

Valeo 715607 CA

RENAULT	272770001R

Valeo 715608 CA

SMART	4518300018

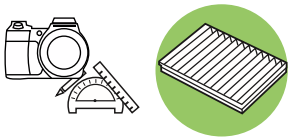

Valeo 715609 PA

SUZUKI	9586164J00

Valeo 715610 CA

RENAULT	7701064237

Valeo 715611 CA

CHRYSLER	5072176AA

Valeo 715612 CA

CITROËN	6447LN

Valeo 715613 PA

CITROËN	6447YN
FIAT	1497498080
PEUGEOT	6447YL

Valeo 715614 CA

CITROËN	6447YK
FIAT	1497497080
PEUGEOT	6447YJ

Valeo 715615 PA

FIAT	7082301

Valeo 715616 PA

CITROËN	647962
FIAT	77364561
PEUGEOT	647963

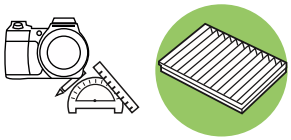

Valeo 715617 — CA

FORD	1120475
MAZDA	410077732

Valeo 715618 — PA

KIA	0K9A56152XA

Valeo 715619 — CA

LEXUS	8713933010
SUBARU	72880AG000/72880XA000A
TOYOTA	897400820
TOYOTA	8713933010
TOYOTA	87139YZZ03

Valeo 715620 — PA

LEXUS	8713930040
TOYOTA	8713902020

Valeo 715621 — CA

MERCEDES	2308300418

Valeo 715622 — CA

MITSUBISHI	7803A027

Valeo 715623 — CA

MITSUBISHI	7803A043

Valeo 715624 — PA

SSANGYONG	68111091A0

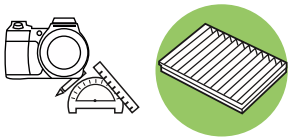

Valeo 715625 PA

SUBARU	72880FG000

Valeo 715626 PA

SUBARU	GE210FC000

Valeo 715627 PA

VOLVO	8687389

Valeo 715628 CA

VOLVO	30676484

Valeo 715629 CA

CITROËN	6447SQ

Valeo 715623 CA

CITROËN	6447ZY
MITSUBISHI	7803A005
PEUGEOT	6447ZX

Valeo 715631 PA

CITROËN	6447ZY
INFINITY	B727A79925
MITSUBISHI	7803A004
NISSAN	27277CL025H
NISSAN	B727A79925
PEUGEOT	6447ZX

Valeo 715632 CA

OPEL	1718044
VAUXHALL	9121625

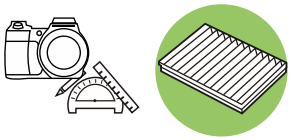

Valeo 715633 PA

RENAULT 7701042499

Valeo 715635 CA

CITROËN 647945

Valeo 715636 PA

CITROËN 6447YC
FIAT 77364063
PEUGEOT 6447YA

Valeo 715637 PA

DAIHATSU 99906-850M2-038

Valeo 715638 PA

HYUNDAI 97133-2L000

Valeo 715639 PA

HYUNDAI 971332E900
KIA 971332E910

Valeo 715640 CA

JAGUAR 6W8318D483AA
JAGUAR C2P2410

Valeo 715641 CA

LEXUS 8713950030
LEXUS 87139-YZZ01

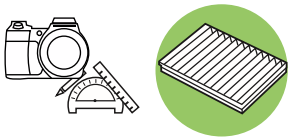

Valeo 715642 PA

MAZDA	D65161J6X

Valeo 715643 CA

MERCEDES	2218300018

Valeo 715644 PA

OPEL	4710210
SUZUKI	9586051K00

Valeo 715645 PA

VAUXHALL	90512706

Valeo 715646 PA

PEUGEOT	002484

Valeo 715647 CA

RENAULT	272778970R

Valeo 715648 CA

CHRYSLER	04596501AB
DODGE	04596501AB

Valeo 715649 PA

RENAULT	7701209837

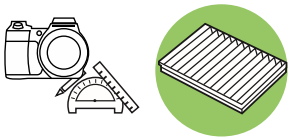

Valeo 715650 CA

SCION	8974000820
TOYOTA	8974000820

Valeo 715651 PA

SUBARU	72880SA000
SUBARU	G3010-SA100

Valeo 715652 PA

SUZUKI	9586080J00

Valeo 715653 PA

SEAT	191819638
VOLKSWAGEN	191819638

Valeo 715654 PA

CHEVROLET	96800069
OPEL	4803883
SATURN	615974
VAUXHALL	96440878

Valeo 715655 PA

LDV	589150001

Valeo 715656 PA

HYUNDAI	9999Z07019

Valeo 715657 PA

MAZDA	TA0561J6X

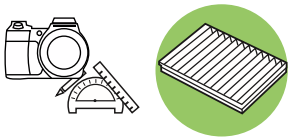

Valeo 715658 — PA

OPEL	1808524
VAUXHALL	52425938

Valeo 715662 — PA

HYUNDAI	971331J000

Valeo 715659 — CA

OPEL	1808246
VAUXHALL	52420930

Valeo 715664 — PA

MAZDA	BC5D61J6X

Valeo 715660 — PA

FORD	1541456

Valeo 715665 — CA

AUDI	1K2819653
SEAT	1K2819653A
SKODA	1K2819653A
VOLKSWAGEN	1K2819653A
VOLKSWAGEN	1K2819653B

Valeo 715661 — CA

FORD	1566997

Valeo 715667 — CA

RENAULT	27891JY15A

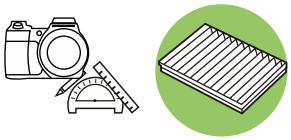

Valeo 715668 PA

SUZUKI	9586081A10

Valeo 715669 PA

HYUNDAI	976174H000

Valeo 715670 PA

JEEP	82204691
JEEP	82208300
JEEP	05013595AA
JEEP	05013595AB

Valeo 715671 CA

CADILLAC	88957450

Valeo 715672 CA

RENAULT	272771128R

Valeo 715673 CA

PEUGEOT	6479K9

Valeo 715674 CA

FORD	1488903

Valeo 715675 CA

OPEL	1808608
VAUXHALL	90541317

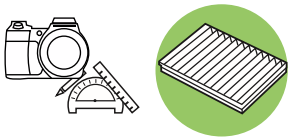

Valeo 715676 CA

VOLVO	30883952

Valeo 715677 CA

CITROËN	6447SR

Valeo 715678 CA

HONDA	80292SFY003

Valeo 715679 CA

MAZDA	GJ6B61P11

Valeo 715680 CA

SAAB	G3210FE000
SUBARU	G3210FE000

Valeo 715681 CA

JAGUAR	C2Z6525

Valeo 715682 CA

LADA	211812202010

Valeo 715683 PA

AUDI	4A0819439A

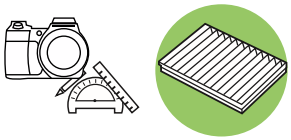

Valeo 715684 PA

MERCEDES 1248350047

Valeo 715685 PA

BMW 64319069927

Valeo 715686 PA

FIAT 46723435

Valeo 715687 PA

Picture not available
Image non disponible
Nicht verfügbares Bild
Imagen no disponible
Immagine non disponibile
Zdjęcie niedostępne

VOLVO 9204627

Valeo 715688 PA

MITSUBISHI MZ311916, MR262425

Valeo 715689 PA

TOYOTA 87139YZZ06

Valeo 715690 CA

BMW 64119163329

Valeo 715691 PA

KIA 971332K000

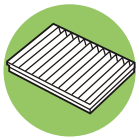

Valeo 715692 PA

HONDA 80291TF0E01, 80292TF0G01

Valeo 715696 PA

DODGE 68033193AA
JEEP 68033193AA

Valeo 715693 CA

PORSCHE 97057362300

Valeo 715697 PA

HYUNDAI 971333J100

Valeo 715694 PA

NISSAN 278914A00C
SUZUKI 95861M68K10

Valeo 715698 PA

SUZUKI 9586154G00

Valeo 715695 CA

DAIHATSU 08975K2000-100

Valeo 715699 PA

SSANGYONG 6812008030

Valeo 715700 PA

SSANGYONG 6811021000

Valeo 715701 CA

TOYOTA 0897400850

Valeo 715702 CA

VOLVO 30733894, 30767022, 30733892
LAND ROVER LR000899

Valeo 715703 PA

NISSAN B7277JN20A

Valeo 715704 CA

VOLKSWAGEN 7P0819631
PORSCHE 95857221900

Valeo 715705 PA

ALFA ROMEO 77365352

Valeo 715706 PA

NISSAN 272771HE0E

Valeo 715707 PA

CHEVROLET 95947238

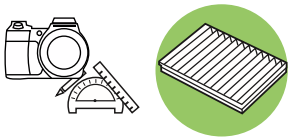

Valeo 715708 — PA

NISSAN — 27891EL00A

Valeo 715709 — PA

NISSAN — 278911FC0A

Valeo 715710 — CA

CHEVROLET — 95215156

Valeo 715711 — PA

CHRYSLER — 68042866AA

Valeo 715712 — CA

BMW — 64319159606

Valeo 715713 — CA

BMW — 64319237157

Valeo 715714 — PA

BMW — 64319237158

Valeo 715715 — PA

BMW — 64119163328

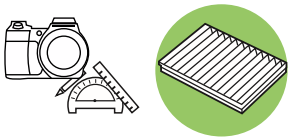

Valeo 715716 PA

HYUNDAI	971332B005

Valeo 715717 PA

JEEP	68079487AA

Valeo 715718 PA

ISUZU	8980084420

Valeo 715719 PA

BMW	64119283497

Valeo 715720 PA

AUDI	5Q0818653
VOLKSWAGEN	5Q0818653

Valeo 715721 PA

NISSAN	272771KA0A
RENAULT	272772100R

Valeo 715722 CA

RENAULT	272774936R

Valeo 715723 CA

FIAT	77365763
FORD	1673744

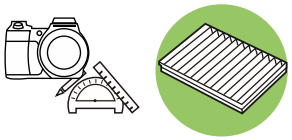

Valeo 715724 — PA

RENAULT	27891JY15A

Valeo 715725 — CA

RENAULT	272770567R

Valeo 715726 — PA

MAZDA	BBP261J6X

Valeo 715727 — CA

AUDI	6R0819653
SKODA	6R0819653

Valeo 715728 — CA

MAZDA	LDY361J6X

Valeo 715729 — CA

LEXUS	8850530100
TOYOTA	8850530100

Valeo 715730 — CA

LEXUS	8713950060

Valeo 715731 — CA

CHEVROLET	22753219

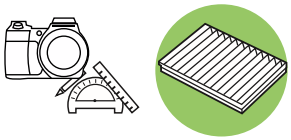

Valeo 715732 — CA

NISSAN	27277JD10A

Valeo 715733 — CA

AUDI	4H0819439

Valeo 715734 — CA

RENAULT	272774653R

Valeo 715735 — PA

CHRYSLER	5058693AA
DODGE	5058693AA
FIAT	05058696AA
JEEP	5058693AA
LANCIA	K05058693AA

Valeo 715736 — PA

SMART	4518350247

Valeo 715737 — PA

AUDI	6R0820367
SEAT	6R0820367
SKODA	6R0820367

Valeo 715738 — PA

HYUNDAI	974064A900

Valeo 715739 — PA

LADA	111808122010

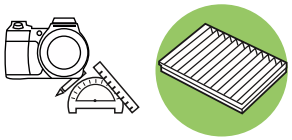

Valeo 715740 PA

HYUNDAI	971332E250
KIA	971330Z000

Valeo 715741 PA

HYUNDAI	971331P000
KIA	971331P000

Valeo 715742 PA

FORD	1748480

Valeo 715743 PA

SUZUKI	9586157L00

Valeo 715744 PA

SEAT	1S0820367
SKODA	1S0820367
VOLKSWAGEN	1S0820367

Valeo 715745 PA

FORD	1718237
MAZDA	UCY061P11

Valeo 716000 PA

RENAULT TRUCKS	5001829129

Valeo 716001 PA

DAF	1600428
RENAULT TRUCKS	5001833354

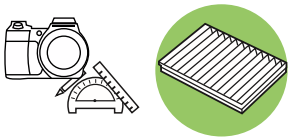

Valeo 716004 PA

DAF 1347066

Valeo 716005 PA

DAF 1347068

Valeo 716006 PA

DAF 1658991

Valeo 716007 PA

DAF 1362124

Valeo 716008 CA

DAF 1362168

Valeo 716009 PA

RENAULT TRUCKS 5001867491
VOLVO TRUCKS 20559447

Valeo 716010 PA

MERCEDES TRUCKS 0008301118

Valeo 716011 PA

MERCEDES TRUCKS 0008301218

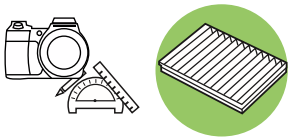

Valeo 716012 — CA

MERCEDES TRUCKS 0008301318

Valeo 716013 — CA

MERCEDES TRUCKS 0008301518

Valeo 716014 — PA

MERCEDES TRUCKS 9738350147

Valeo 716015 — CA

MERCEDES TRUCKS 9738350347

Valeo 716016 — PA

MERCEDES TRUCKS 0008356947

Valeo 716017 — PA

MERCEDES TRUCKS 0018350747

Valeo 716018 — PA

MERCEDES TRUCKS 9408350247

Valeo 716019 — PA

MERCEDES TRUCKS 9408350047

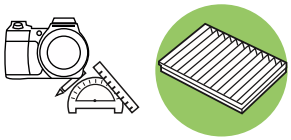

Valeo 716020 CA

MERCEDES TRUCKS 9408350147

Valeo 716021 PA

MERCEDES TRUCKS 9738350247

Valeo 716023 CA

MERCEDES 9018300418

Valeo 716028 PA

IVECO 504024890

Valeo 716029 CA

IVECO 2994583

Valeo 716033 PA

IVECO 500387947

Valeo 716034 PA

MAN 81619100011

Valeo 716035 PA

MAN 85619500025

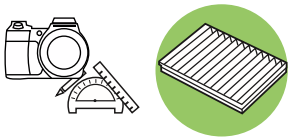

Valeo 716036 PA

MAN	81619100018
NEOPLAN (NEOMAN)	81619100018

Valeo 716037 CA

MAN	81619100019
NEOPLAN (NEOMAN)	81619100019

Valeo 716039 PA

SCANIA TRUCKS	1420197

Valeo 716040 PA

SCANIA TRUCKS	1326180

Valeo 716041 PA

VOLVO TRUCKS	1584575

Valeo 716045 PA

VOLVO TRUCKS	81436917

Valeo 716046 PA

MAN	0018357047
MERCEDES (EVOBUS/SETRA)	0018357047
NEOPLAN (NEOMAN)	1101891B

Valeo 716047 PA

MAN	88779100003
NEOPLAN (NEOMAN)	88779100003

Valeo 716048 PA

MAN	88779100002
MERCEDES (EVOBUS/SETRA)	H14002499
NEOPLAN (NEOMAN)	88779100002

Valeo 716049 PA

IRISBUS	1100372A, 1101193/A
IVECO	93350A
MAN	81779100016
MERCEDES (EVOBUS/SETRA)	0018255447, 20401236, 6278350447
NEOPLAN (NEOMAN)	0018255447
SCANIA (BUS)	1100372B

Valeo 716050 PA

MERCEDES (EVOBUS/SETRA)	0018351547

Valeo 716052 PA

SCANIA TRUCKS	1770813

Valeo 716053 CA

VOLVO TRUCKS	20409908

Valeo 716054 PA

NEOPLAN (NEOMAN)	180740200

Valeo 716055 PA

NEOPLAN (NEOMAN)	180412710

Valeo 716056 CA

MAN (BUS)	0018355547
MERCEDES (EVOBUS/SETRA)	0018355547
NEOPLAN (NEOMAN)	0018355547

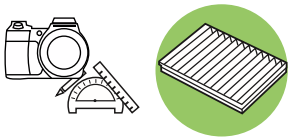

Valeo 716057 PA

MAN (BUS)	81779100012, 81779720155
NEOPLAN (NEOMAN)	81779100012

Valeo 716058 PA

MERCEDES (EVOBUS/SETRA)	0018357147

Valeo 716059 PA

MERCEDES (EVOBUS/SETRA)	0018356147

Valeo 716060 PA

MERCEDES (EVOBUS/SETRA)	‘0018359147

Valeo 716061 PA

MERCEDES (EVOBUS/SETRA)	0018356247

Valeo 716062 PA

IRISBUS	5006175605

Valeo 716063 CA

IRISBUS	2994769
IVECO	2994769

Valeo 716064 PA

MAN (BUS)	83779720656
MERCEDES (EVOBUS/SETRA)	0018359247

Valeo 716065 CA

MERCEDES TRUCKS 9608300118

Valeo 716066 PA

MERCEDES TRUCKS 9608300018

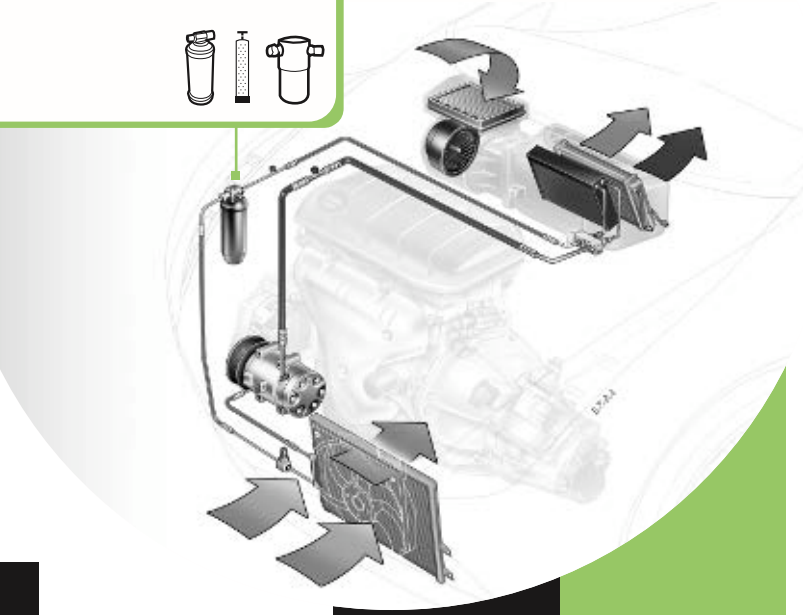

RECEIVER DRIER/CARTRIDGE DRIER/ACCUMULATOR

BOUTEILLE DÉSHYDRATANTE / CARTOUCHE DÉSHYDRATANTE ACCUMULATEUR

TROCKNER / KARTUSCHE / AKKUMULATOR

FILTRO DESHIDRATANTE / CARTUCHO DESHIDRATANTE ACUMULADOR

FILTRO SECO/ACCUMULATOR

FILTRO DISIDRATATORE / CARTUCCIA DISIDRATANTE ACCUMULATORE

VOCHTAFSCHEIDER / FILTER DROGER CARTRIDGE ACCUMULATOR

FILTR OSUSZACZ / FILTR KARTRIDŁ / FILTR ZASOBNIK

ОСУШИТЕЛЬ / НАКОПИТЕЛЬ

VYSOU EČ / KAZETOVý SU IČ / SBĚRAČ

RECIPIENT USCATOR / CARTUŞ USCATOR / ACUMULATOR

NEM LICI / KURUTUCU FIŞEĞI / KÜMÜL TÖR

Φίλτρο Υγρού / Ξηραντήρας τύπου φυσιγγίου (κασέτα) / Συσσωρευτής

2.3

EN

Function

The receiver drier is a tank of refrigerant in liquid state which protects the air conditioning system. It contains a drying element (in the form of small balls containing desiccant to absorb water) which is used to trap water circulating in the air-conditioning loop, as well as filters for retaining impurities and particles. 3 technologies of filters : Receiver and cartridge for AC loop with expansion valve, accumulator for AC loop with orifice tube.

Replacement

The filter must be replaced every 3 years or each time the loop is open to air.
Regular replacement avoids serious breakdown and an expensive replacement of the other components in the system.

Origins of humidity in the circuit :

- Manufacturing defects and improper maintenance
- The use of old oil, or invalid oil or the refrigerant fluid charging procedure
- A loop which remained opened to the air for too long.

Repair recommendations

- Before assembly, make sure that the receiver is provided with its obturators and is free from cutting burs, edges or clogged nets
- Remove the plugs on the receiver only when connecting it to the circuit.
- Start vacuum draining immediately after closing the circuit. Ensure a good vacuum before charging the refrigerant gas.
- Use a receiver in place of another: A receiver is sized specifically according to its thermal behavior, and the quantity of refrigerant fluid in the circuit.
- Do not compromise quality : the best dessicants (Zeolite) adsorb up to 15% of their dry weight (7.5 g), equivalent to about 10 water drops.

FR

Fonction

Le filtre déshydratant est un réservoir de frigorigène à l'état liquide qui protége le circuit de climatisation. Il contient du dessicant qui piège l'humidité et filtre les impuretés véhiculées par le fluide.
Il existe 3 technologies de filtres déshydratants: les bouteilles déshydratantes, les cartouches déshydratantes et les accumulateurs.

Remplacement

Le filtre déshydratant doit être remplacé tous les 3 ans ou à chaque ouverture de la boucle. Son remplacement régulier évite des pannes sérieuses et le remplacement onéreux d'autres composants du système de climatisation.

Origines de l'humidité dans le circuit:

- Défaut de fabrication et défaut de maintenance
- Utilisation d'une huile usagée ou d'une mauvaise procédure de charge en huile ou fluide frigorigène.
- Boucle restée ouverte à l'air libre trop longtemps

Recommandations Valeo pour la Réparation

- Avant le montage, vérifier que le filtre déshydratant est muni de ses obturateurs, et est exempt de bavures, d'arêtes coupantes, ou de filets encrassés..
- Retirer les obturateurs du filtre déshydratant juste avant de le connecter au circuit.
- Démarrer le tirage à vide immédiatement après la fermeture du circuit. Assurez-vous de bien faire le vide avant de procéder à la recharge en gaz.
- Utiliser un filtre déshydratant à la place d'un autre, ou un standard qualifié d'adaptable est un risque à ne pas prendre. Un filtre déshydratant est dimensionné spécifiquement en fonction des contraintes thermiques et de la quantité de fluide frigorigène de la boucle.
- Pas de compromis avec la qualité : les meilleurs dessicants (Zeolite) permettent d'absorber 15% de leur poids sec en eau (7.5 g) ce qui équivaut à environ 10 gouttelettes d'eau.

DE

Funktion

Der Trockner ist ein Behälter, durch den das Kühlmittel in flüssigem Zustand fließt. Er enthält ein Trockenmittel in Form kleiner Kügelchen (Granulat), die im Klimakreislauf zirkulierendes Wasser absorbieren, sowie Filter zum Auffangen von Schmutzpartikeln.
3 Filtertechnologien stehen zur Verfügung: Trockner und Kartusche für Klimaanlagen mit Drosselventil, Akkumulator für Klimaanlagen mit Festdrossel.

Austausch

Der Filter muss alle 3 Jahre bzw. jedesmal, wenn Luft in die Klimaanlage gerät, ausgewechselt werden. Durch regelmäßiges Auswechseln können gravierende Pannen und das kostspielige Auswechseln anderer Bauteile vermieden werden.

Ursachen für Feuchtigkeit im Klimakreislauf:

- Fabrikationsmängel und unsachgemäße Wartung
- Verwendung von gebrauchtem Öl, inadäquatem Öl oder unsachgemäßes Auffüllverfahren
- Längeres Eindringen von Luft in den Klimakreislauf.

Reparaturempfehlungen

- Prüfen Sie vor dem Zusammenbauen, ob der Trockner mit seinem Absperrorgan versehen ist und keine rauhen oder kantigen Stellen bzw. verstopften Zellen aufweist
- Lösen Sie die Stöpsel erst vom Trockner, wenn Sie ihn ans Netz anschließen
- Beginnen Sie sofort nach dem Schließen des Kreislaufs mit der Erstellung des Vakuums. Stellen Sie vor dem Einführen des Kühlgases sicher, dass das erforderliche Vakuum vorhanden ist.
- Die Verwendung eines anderen als des vorgeschriebenen Trockners oder eines als kompatibel beschriebenen Standardtrockners ist mit einem hohen Risiko verbunden: Die Trockner sind genau nach dem gewünschten thermischen Verhalten und nach der Kühlmittelmenge im Kreislauf ausgelegt.
- Keine Kompromisse bei der Qualität: die besten Trocknungsmittel wie Zeolith adsorbieren eine Wassermenge, die bis zu 15 % ihres Trockengewichts (7,5 g), d.h. ungefähr 10 Wassertropfen entspricht.

SP

Función

El filtro deshidratante es un depósito de refrigerante en estado líquido que protege el sistema de aire acondicionado. Contiene un elemento deshidratante (en forma de bolas pequeñas, que contienen un agente desecante para absorber al humedad) que se utiliza para captar la humedad que circula en el circuito de climatización, así como filtros que retienen impurezas y partículas. 3 tecnologías de filtros: botella y cartucho para circuitos de climatización con válvula de expansión, acumulador para circuitos de climatización con orificio calibrado.

Sustitución

El filtro debe sustituirse cada 3 años o cada vez que se abra el circuito y se exponga al aire. Su reemplazo regular evita daños graves y una sustitución onerosa de otros componentes del sistema.

Causas de humedad en el circuito:

- Defectos de fabricación / mantenimiento incorrecto
- Empleo de aceite usado o inadecuado, o procedimiento indebido de recarga de fluido refrigerante
- Circuito abierto y expuesto al aire demasiado tiempo.

Recomendaciones para la reparación

- Antes de instalarlo, verificar que el filtro deshidratante esté provisto de obturadores y no presente bordes cortantes ni mallas obstruidas.
- Retirar los tapones de la botella solamente al conectarla al circuito.
- Empezar a hacer el vacío inmediatamente después de cerrar el circuito. Verificar el vacío correcto antes de recargar el gas refrigerante.
- No debe correrse el riesgo de utilizar un modelo de botella por otro o un modelo supuestamente adaptable, pues la botella tiene dimensiones específicas según su comportamiento térmico y la cantidad de refrigerante en el circuito.
- Hay que comprometerse con la calidad: los mejores desecantes (Zeolite) adsorben el agua hasta un 15% de su peso en seco (7.5 g), lo que equivale a unas diez gotas de agua.

IT

Funzione

Il filtro disidratatore è un serbatoio di refrigerante allo stato liquido che protegge il sistema di climatizzazione. Contiene un elemento essiccante (sotto forma di sfere, per assorbire l'acqua) che viene utilizzato per catturare l'acqua in circolazione all'interno del circuito di climatizzazione così come il filtro trattiene le impurità e le particelle. Esistono 3 tecnologie di filtri: filtro disidratatore e cartuccia per circuito A/C con valvola d'espansione, accumulatore per circuito A/C con tubo d'espansione.

Sostituzione

Il filtro deve essere sostituito ogni 3 anni e comunque ogni volta che si apre il circuito. Sostituendolo regolarmente si evitano gravi guasti e costose riparazioni degli altri componenti del sistema.

Origine dell'umidità nel circuito:

- Difetti di fabbricazione e manutenzione scorretta
- Uso di olio vecchio o inadeguato, o procedura di riempimento del liquido refrigerante non corretta
- Circuito rimasto aperto per troppo tempo.

Raccomandazioni Valeo per la riparazione

- Prima di montarlo, controllare che il filtro sia provvisto di tappi e che sia privo di bavature o angoli taglienti e alveoli intasati.
- Rimuovere i tappi posti sul filtro solo quando lo si collega al circuito.
- Avviare lo scarico a depressione immediatamente dopo aver chiuso il circuito.
- Verificare che il livello di vuoto sia corretto prima di ricaricare il gas refrigerante.
- Utilizzare un filtro al posto di un altro o uno standard descritto come adattabile è un rischio da evitare: ogni filtro è appositamente dimensionato per un determinato comportamento termico e per la quantità di fluido refrigerante nel circuito.
- Nessun compromesso con la qualità: i migliori disidratatori (Zeolite) assorbono acqua fino al 15% del loro peso secco (7,5 g), pari a circa 10 gocce di acqua.

NL

Functie

De vochtafscheider is een reservoir van koelmedium in vloeibare staat, die het airconditioningsysteem beveiligt. De vochtafscheider bevat een droogelement (in de vorm van korrels en bevat een droogmiddel om water te absorberen) dat wordt gebruikt om het water op te vangen dat in het airconditioningsysteem circuleert, evenals filters die verontreinigingen en deeltjes vasthouden.
3 filtertechnologieën: Vochtafscheider en cartridge voor airconditioningsysteem met expansieventiel, accumulator voor airconditioningsysteem met orifice tube.

Vervanging

De filter moet om de 3 jaar worden vervangen of telkens wanneer het airconditioningsysteem aan lucht is blootgesteld. Regelmatige vervanging voorkomt ernstige defecten en de vervanging van andere dure onderdelen van het systeem.

Oorzaken van vocht in het systeem:

- Fabricagefouten / slecht onderhoud
- Het gebruik van oude olie, of verkeerde olie of verkeerde werkwijze bij het vullen met koelmiddelvloeistof
- Airconditioningsysteem dat te lang aan lucht blootgesteld is geweest.

Aanbevelingen bij de reparatie

- Controleer, voordat u de montage uitvoert, of de vochtafscheider geleverd is met de pluggen en vrij is van bramen, randen of verstopte netten
- Verwijder de pluggen op de vochtafscheider pas wanneer u deze aan het systeem koppelt.
- Begin onmiddellijk vacuüm te pompen, nadat u het systeem gesloten hebt. Zorg dat er een goed vacuüm in het systeem is, voordat u het vult met koelmiddel-gas.
- De ene vochtafscheider vervangen door een andere of door een standaardmodel dat als aanpasbaar wordt beschreven is een risico dat niet genomen moet worden: Een vochtafscheider is speciaal afgestemd op de koelprocedure en de hoeveelheid koelmiddel in het systeem.
- Neem geen risico's met de kwaliteit: de beste droogmiddelen (Zeoliet) absorberen water tot 15% van hun droge gewicht (7,5 g), equivalent aan ongeveer 10 waterdruppels.

PL

Funkcja

Filtr osuszacz jest zbiornikiem czynnika chłodniczego w stanie ciekłym, który chroni system klimatyzacji przed wilgocią. Zawiera element osuszający (w formie kulek desykantu wchłaniających wodę), który jest używany do wyłapywania wilgoci znajdującej się w układzie klimatyzacji jak również filtrowania cząstek zanieczyszczeń. Występują 3 technologie filtrów: Filtr osuszacz i kartridż do układów A/C z zaworem rozprężnym oraz filtr zasobnik do układów A/C z dyszą dławiącą.

Wymiana

Filtr powinien być wymieniany co 3 lata lub po każdej ingerencji w układ A/C z dostępem powietrza. Regularna wymiana pozwala uniknąć poważnej awarii i kosztownej wymiany innych elementów systemu.
Przyczyny powstawania wilgoci w układzie:

- Wady produkcyjne i niewłaściwa konserwacja
- Wykorzystanie starego lub niewłaściwego oleju lub czynnika chłodniczego podczas napełniania układu
- Pozostawienie układu A/C otwartego na działanie powietrza atmosferycznego przez zbyt długi czas.

Zalecenia naprawcze

- Przed rozpoczęciem montażu, upewnij się, że osłona filtra osuszacza jest wolna od uszkodzeń i zarysowań a jego wlot nie jest zatkany
- Usuń osłony z filtra dopiero przed podłączeniem go do układu.
- Rozpocznij wytwarzanie próżni natychmiast po zamknięciu układu A/C. Zapewnij dobry poziom próżni przed napełnianiem czynnika chłodniczego.
- Zachowaj ostrożność stosując zamiennik filtra: wielkość filtra jest specjalnie dostosowana do jego wymagań termicznych i ilość czynnika chłodniczego w układzie.
- Brak kompromisu dla gorszej jakości: najlepszy desykant (Zeolit) adsorbuje do 15% swojej suchej wagi (7,5 g), co odpowiada około 10 kroplom wody.

RU

Функция

Осушитель - это бак хладагента в жидком состоянии, который защищает систему кондиционирования воздуха. Он содержит осушительный элемент (в форме мелких шариков, содержащих десикант для поглощения воды). Десикант используется для поглощения воды, циркулирующей в системе кондиционирования воздуха.
Осушитель также содержит фильтры для удержания загрязнителей и мелких частиц. 3 технологии фильтрации : ресивер и картридж для системы кондиционирования воздуха с расширительным клапаном, накопитель системы кондиционирования воздуха с дроссельной трубкой.

Замена

Фильтр следует заменять раз в 3 года или каждый раз при открытии системы.
Регулярная замена может предотвратить серьезные поломки и позволит избежать дорогостоящей замены других компонентов в системе.
Источники влажности в цепи :

- Производственные дефекты и неправильное обслуживание
- Использование старого масла или неподходящего масла или неправильный порядок заправки хладагента
- Открыт доступ воздухом слишком продолжительное время.

Рекомендации по ремонту

- Перед монтажом убедиться, что осушитель снабжен пробками и не имеет заусенец, острых кромок или засорения сетчатого фильтра
- Удалить пробки на осушителе только при подключении к цепи.
- Запустить дренаж вакуума сразу же после закрытия цепи. Убедиться в создании полной герметичности перед заправкой хладагента.
- Использовать новый осушитель вместо старого: Размеры осушителя устанавливаются строго согласно его температурным характеристикам и качеству хладагента в цепи.
- Не нарушать стандартов качества : лучшие десиканты (Zeolite) поглощают до 15% от их сухого веса (7,5 г), что равно приблизительно 10 каплям воды.

CZ

Funkce
Vysoušecí filtr je zásobník chladiva v kapalném stavu, který chrání systém klimatizace. Obsahuje vysoušecí prvek Zeolite(ve formě malých kuliček, které dokáží absorbovat vodu) který eliminuje vlhkost v okruhu klimatizace a zajišťuje filtraci mechanických nečistot a částeček. Používají se 3 technologie filtrů: Vysoušeč a kartridge pro okruh klimatizace s expanzním ventilem a akumulátor pro okruh klimatizace se škrticí tryskou.

V měna
Filtr musí být vyměněn každé 3 roky nebo při každém otevření okruhu klimatizace. Pravidelná výměna chrání okruh proti poškození a případné výměně jiných-mnohem dražších komponentů v systému klimatizace.
P ičiny vlhkosti v okruhu:
- Závady při výrobě nebo nesprávně prováděné údržbě
- Použití starého nesprávného oleje, případně nesprávný postup při výměně chladiva!
- Okruh klimatizace zůstal příliš dlouhou dobu otevřený a mohl do něj vniknout vzduch.

Doporučení pro opravy
- Před montáží zajistěte, zda je jednotka filtru správně těsní a zda na těsnění nejsou poškozená místa, hrany atd.
- Odstraňte zátky z vysoušeče teprve těsně před připojením do okruhu.
- Spusťte odsávání okamžitě po uzavření okruhu. Zajistěte silné vakuum před plněním chladiva.
- Použijte správný typ vysoušeče: Vysoušeč je velikostí přizpůsoben tepelným požadavkům a množství chladiva v okruhu.
- Neprovádějte žádné kompromisy z hlediska kvality: Nejlepší vysoušecí prostředky (Zeolite) adsorbují až 15 % své hmotnosti v suchém stavu (7,5 -10g), což odpovídá přibližně 10 kapkám vody.

HU

Szerepe
A szárítószűrő egy olyan tartály, amely folyékony formában tárolja a hűtőközeget. Tartalmaz egy olyan szárító anyagot (kis golyók formájában), amely magába szívja a klímarendszerben lévő nedvességet és kiszűri a szennyező részecskéket. 3 különböző technológia létezik: hagyományos szárítószűrő és "kartridzses szűrő" az expanziós szeleppel felszerelt rendszerekhez, vagy akkumulátoros szárítószűrő a kalibráló szelepes rendszerekhez.

Cseréje
A szárítószűrőt legalább három évente ki kell cserélni, illetve minden esetben, amikor a klímarendszer megbontásra kerül és a levegővel érintkezik.
A rendszeres cserével megelőzhető a klímarendszer többi alkatrészének meghibásodása és költséges cseréje.
Mit I kerül nedvesség a klímarendszerbe?
- gyártási hiba vagy nem megfelelő karbantartás
- fáradt olaj vagy nem megfelelő típusú olaj használata
- a megbontott klímarendszer túl sokáig érintkezett a környező levegővel

Javítási tanácsok
- Beszerelés előtt győződjön meg arról, hogy a szárítószűrő nyílásai el vannak-e látva a megfelelő lezáró tömítésekkel és nem sérültek-e.
- A lezáró tömítéseket csak közvetlenül a beszerelés előtt távolítsa el.
- A szűrő beszerelése után azonnal végezzen alapos vákuumozást és csak azután töltse fel a rendszert hűtőközeggel és klímaolajjal.
- Használjon a jármű típusának megfelelő szárítószűrőt, mert mindegyik specifikus kialakítású (hőtani tulajdonságok, hűtőközeg mennyiség, stb.)
- Ne kössön kompromisszumot a minőségben: a legjobb szárító anyag (zeolit) akár a saját tömege 15%-ának megfelelő nedvességet is képes magába szívni.

RO

Funcţiune:
Radiatorul climă este un rezervor cu refrigerant în formă lichidă care protejează sistemul de aer condiţionat. Conţine şi uscător (sub formă de bile mici, care conţin desicător, care absoarbe apa), care este o capcană pentru apa din sistemul de aer condiţionat, respectiv este şi un filtru pentru reţinerea impurităţilor şi a particulelor.
3 tehnologii de filtrare: radiator climă şi cartuţ cu ventil de extindere, acumulator pentru sistemul de aer condiţionat cu tub de deschidere.

Înlocuire:
Filtrul trebuie înlocuit o dată la trei ani, sau de fiecare dată când sistemul este expus la aer. Înlocuirea regulată previne defectarea şi înlocuirea costisitoare a altor componente din sistem.
Originea umidităţii în circuit:
- Defecte de fabricaţie şi întreţinere necorespunzătoare
- Folosirea unui ulei vechi, nevalabil, procedură neadecvată de schimbare a lichidului refrigerant
- Un circuit care a fost expus mult timp la aer.

Recomandări de reparaţie:
- Înainte de montare asiguraţi-vă că radiatorul este dotat cu piesă de etanţare şi că nu există bare sau colţuri ce pot tăia sau perfora, respectiv filtre înfundate
- Înlăturaţi dispozitivele priză de la radiator numai când îl conectaţi la circuit.
- Începeţi drenarea în vid imediat după închiderea circuitului.
Gazul refrigerant se va reîncărca în vid.
- Folosiţi un radiator în locul altuia: radiatorul este dimensionat specific în aţa fel să corespundă comportamentului termic
- Nu faceţi nici un compromis în ceea ce priveşte calitatea: cele mai bune desicatoare (Zeolite) absorb până la 15% a masei lor uscate (7.5 g) echivalent cu aproximativ 10 picături de apă.

TU

İşlev:
Kurutucu bir soğutucu akışkan deposu olup sistemi nem oluşumlarına karşı korur. Nem çeken bir element ihtiva eder (suyu absorbe eden küçük toplar şeklinde). Ayrıca sistem içindeki kir ve parçacıkları filtreler.3 cins kurutucu mevcuttur; Kurutucu şişeler, kurutucu fişekler ve toplayıcılar.

Değişim:
Kurutucular her 3 yılda bir ya da sistem her açıldığında değiştirilmelidir.
Yapılan düzenli kurutucu değişimleri ciddi arızaları ve sistemdeki diğer pahalı parçaların değişimini engeller.
Sistemdeki olası nem sebepleri:
- Üretim hataları ve bakımlar sırasında gösterilen yetersiz hassasiyet
- Eski ya da uygun olmayan soğutucu yağ kullanımı, dolum kurallarına uyulmaması
- Sistemin ortam etkilerine gereğinden fazla açık kalması

Onarım önerileri:
- Uygulamadan önce ürünün tam olduğuna, üzerinde çarpık kesik gibi hasarlar olmadığına ve ambalajının iyi durumda olduğuna emin olun.
- Kurutucunun üzerindeki kapak sadece sisteme uygulanacağı zaman açılmalıdır
- Sistemi kapar kapamaz vakumlam işlemine başlayın. Gaz doldurmadan önce yeterli vakum oluştuğuna emin olun.
- Bir kurutucuyu uygun olan diğeriyle değiştirin. Bir kurutucu termal özellikleri ve sistemdeki soğutucu akışkan miktarı göz önüne alınarak ölçülendirilmiştir.
- Kalite özelliklerini göz ardı etmeyin: En iyi nem çeker (zeolit) ağırlığının %15'ine kadar su absorbe edebilir. 7.5gr, 15 damla su.

GR

Λειτουργία :
Ο ξηραντίρας (φίλτρο υγρού) είναι μια δεξαμενή φρέον υγρής μορφής που προστατεύει το σύστημα του κλιματισμού. Περιέχει ένα στοιχείο ξήρανσης (υπό μορφή μικρών σφαιριδίων) το οποίο παγιδεύει την κυκλοφορία του νερού μέσα στο σύστημα, καθώς και φίλτρα που συγκρατούν τις ακαθαρσίες και τα διάφορα σωματίδια.
Υπάρχουν 3 τεχνολογίες φίλτρων: σε μπουκάλι ή σε κασσέτα για συστήματα με βαλβίδα εκτόνωσης, ή οι συσσωρευτές για συστήματα με βαλβίδα αντεπιστροφής.

Αντικατάσταση :
Ο ξηραντίρας πρέπει να αντικατασταθεί κάθε 3 χρόνια ή κάθε φορά που ανοίγεται το σύστημα και έρχεται σε επαφή με τον αέρα.
Η τακτική του αντικατάσταση προλαβαίνει τις σοβαρές βλάβες και μια ενδεχομένως ακριβή αντικατάσταση άλλων στοιχείων του συστήματος.

Αίτια εμφάνισης υγρασίας στο κύκλωμα :
- κατασκευαστικές βλάβες
- χρήση μεταχειρισμένου λαδιού ή λανθασμένη διαδικασία γεμίσματος του λαδιού ή του φρέον.
- Κύκλωμα που παρέμεινε για μεγάλο χρονικό διάστημα ανοικτός στον αέρα του περιβάλλοντος.

Συστάσεις απο την Valeo για την επισκευή :

- Πριν από τη συναρμολόγηση, βεβαιώστε ότι ο ξηραντίρας παρέχεται με τους αποφράκτες και ότι είναι απαλλαγμένο από γρεζιάσματα κοπής, ή βουλωμένα δίκτυα.
- Απομακρύνετε τους αποφράκτες από το φίλτρο υγρού μόνο για την σύνδεση στο κύκλωμα.
- Αρχίστε την αποστράγγιση κενού αμέσως μόλις κλείσετε το κύκλωμα. Πριν φορτίσετε το ψυκτικό υγρό, βεβαιωθείτε ότι το κενό είναι πολύ καλό.
- Η χρήση ενός ξηραντίρα στη θέση ενός άλλου ή άλλης ποιότητας αποτελεί ρίσκο: Το κάθε φίλτρο υγρού είναι συγκεκριμένα προσαρμοζμένο στους θερμικούς περιορισμούς και την ποσότητα ψυκτικού υγρού του κυκλώματος.
- Μην κάνετε κανένα συμβιβασμό ως προς την ποιότητα: το καλύτερο αφυγραντικό μέσο (Ζεόλιθος) απορροφά νερό έως 15% του βάρους του (7,5 γραμμάρια), ίσο με 10 σταγόνες νερού περίπου.

		CC				OE	Valeo	

ALFA ROMEO

145

1.3 i	E	1351	AR33501		09/94 ▸ 12/96	60810151	**508628**	
1.4 i Twin Spark 16V	E	1370	AR33503		12/96 ▸ 06/01	60662250	**508805**	
1.6 i	E	1596	AR33201		09/94 ▸ 12/96	60810151	**508628**	
1.6 i Twin Spark 16V	E	1598	AR67601, AR32102		12/96 ▸ 06/01	60662250	**508805**	
1.7 i 16V	E	1712	AR33401		09/94 ▸ 12/96	60810151	**508628**	
1.8 i Twin Spark 16V/A	E	1747	AR67106, AR67199, AR32201		12/96 ▸ 06/01	60662250	**508805**	
2.0 i 16V, 2.0 i AGV 16V	E	1970	AR32301, AR67299, AR67204		12/96 ▸ 06/01	60662250	**508805**	
1.9 JTD	D	1910	AR32302		03/99 ▸ 06/01	60662250	**508805**	
1.9 TD	D	1929	AR33601, AR67501		09/94 ▸ 12/96	60810151	**508628**	
1.9 TD	D	1929	AR67501, AR33601		12/96 ▸ 03/99	60662250	**508805**	

146

1.3 i	E	1351	AR33501		12/94 ▸ 12/96	60810151	**508628**	
1.4 i Twin Spark 16V	E	1370	AR33503		12/96 ▸ 06/01	60662250	**508805**	
1.6 i	E	1596	AR33201		12/94 ▸ 12/96	60810151	**508628**	
1.6 i Twin Spark 16V	E	1598	AR67601		12/96 ▸ 06/01	60662250	**508805**	
1.7 i 16V	E	1712	AR33401		12/94 ▸ 12/96	60810151	**508628**	
1.8 i Twin Spark 16V	E	1747	AR67106		12/96 ▸ 06/01	60662250	**508805**	
2.0 i 16V **2.0 i Twin Spark A 16V**	E	1970	AR32301, AR67204		12/96 ▸ 06/01	60662250	**508805**	
1.9 JTD	D	1910	AR32302		03/99 ▸ 06/01	60662250	**508805**	
1.9 TDs	D	1929	AR67501, AR33601		12/94 ▸ 12/96	60810151	**508628**	
1.9 TDs	D	1929	AR67501, AR33601		12/96 ▸ 06/01	60662250	**508805**	

147 (2000>2004)

1.6 i Twin Spark 16V	E	1598	AR32104, AR37203		10/00 ▸ 09/04	60662250	**508805**	
2.0 i Twinspark 16V	E	1970	AR32310		10/00 ▸ 09/04	60662250	**508805**	
3.2 i V6 24V	E	3179	932A.000	Kit	02/03 ▸ 09/04	71737165	**509920**	
1.9 JTD	D	1910	182B9.000, 937A2.000		10/00 ▸ 09/04	60662250	**508805**	
1.9 JTD 16V	D	1910	937A4.000, 192B1.000	Kit	12/02 ▸ 09/04	71737165	**509920**	

147 (2004>)

1.6 i Twin Spark 16V	E	1598	AR32104, AR37203		10/04 ▸	60662250	**508805**	
2.0 i Twin Spark 16V	E	1970	AR32310		10/04 ▸	60662250	**508805**	
1.9 JTD 16V, 1.9 JTDM	D	1910	192A5.000, 937A4.000	Kit	10/04 ▸	71737165	**509920**	

155

2.0 i Turbo	E	1995	AR67203		11/91 ▸ 03/95	60810200	**508630**	
2.5 i V6	E	2492	AR67303, AR67302, AR67301		11/91 ▸ 08/97	60810151	**508628**	
1.9 TD	D	1929	AR33601		04/96 ▸ 08/97	60810151	**508628**	
2.5 TD	D	2500	VM31B		03/95 ▸ 08/97	60810151	**508628**	

156 (97>2003)

1.6 i Twin Spark 16V	E	1598	AR32104, AR67601, AR32103 AR32102		09/97 ▸ 03/03	60662250	**508805**	
1.8 i Twin Spark 16V ▸ 0325639	E	1747	AR32201, AR32205		09/97 ▸ 03/03	60662250	**508805**	
2.0 JTS 16V **2.0 i Twin Spark 16V** ▸ 0325639	E	1970	AR32301, 937A1.000		09/97 ▸ 03/03	60662250	**508805**	
2.5 i V6 24V ▸ 0325639	E	2492	AR32401		09/97 ▸ 07/00	60662250	**508805**	
1.9 JTD ▸ 0325639	D	1910	AR32302		09/97 ▸ 07/00	60662250	**508805**	
2.4 JTD ▸ 0325639	D	2387	AR32501		09/97 ▸ 07/00	60662250	**508805**	

		cc				OE	Valeo	
ALFA ROMEO (.../...)								
156 (2003>)								
1.6 i Twin Spark 16V	E	1598	AR32104	Kit	04/03 ▸	71737165	**509920**	
1.8 i Twin spark 16V	E	1747	AR32205	Kit	04/03 ▸	71737165	**509920**	
2.0 JTS 16V **2.0 JTS TwinSpark 16V** **2.0 i Twin Spark 16V**	E	1970	AR32310, 937A1.000 932A2.000	Kit	04/03 ▸	71737165	**509920**	
2.5 i V6 24V	E	2492	AR32405	Kit	04/03 ▸	71737165	**509920**	
3.2 i V6 24V	E	3179	932A.000	Kit	04/03 ▸	71737165	**509920**	
1.9 JTD, 1.9 JTD 16V	D	1910	937A2.000, 937A4.000 192A5.000, 937A5.000 192B1.000	Kit	04/03 ▸	71737165	**509920**	
2.4 JTD 10V, 2.4 JTD 20V	D	2387	841C.000, 841M.000 841G.000	Kit	04/03 ▸	71737165	**509920**	
159								
1.8 MPi 16V	E	1796	939A4.000	Kit	07/05 ▸	71748263	**509933**	
1.9 JTS 16V	E	1859	939A6.000	Kit	07/05 ▸	71748263	**509933**	
2.2 JTS 16V	E	2198	939A5.000	Kit	07/05 ▸	71748263	**509933**	
3.2 JTS 24V	E	3196	939A.000	Kit	12/05 ▸	71748263	**509933**	
1.9 JTDM 16V, 1.9 JTDM 8V	D	1910	937A7.000, 939A2.000 939A1.000, 937A8.000	Kit	07/05 ▸	71748263	**509933**	
2.4 JTDM 20V	D	2387	939A3.000, 939A9.000	Kit	07/05 ▸	71748263	**509933**	
164 (87>92)								
2.0 i Twin Spark	E	1962	AR06420, AR06416		11/89 ▸ 09/92	60510695	**508611**	
2.0 Turbo	E	1995	AR06476		11/89 ▸ 09/92	60510695	**508611**	
2.0 V6 Turbo	E	1997	AR64101, AR64102		10/90 ▸ 09/92	60510695	**508611**	
3.0 i V6	E	2959	AR64301, AR06412, AR06410		09/89 ▸ 09/92	60510695	**508611**	
2.5 TD	D	2500	VM84A		11/89 ▸ 09/92	60510695	**508611**	
164 (92>98)								
2.0 i Twin Spark	E	1962	AR64103		09/92 ▸ 09/98	60510695	**508611**	
2.0 V6 Turbo	E	1997	AR64102		09/92 ▸ 09/98	60510695	**508611**	
3.0 i, 3.0 i V6, 3.0 i V6 24V	E	2959	AR66301, AR66303, AR64305 AR64306, AR66302, AR64307		09/92 ▸ 09/98	60510695	**508611**	
2.5 TD	D	2500	VM08B, VM32B		09/92 ▸ 09/98	60510695	**508611**	
166 (98>2003)								
2.0 i Twin Spark 16V	E	1970	AR36301, AR34103		10/98 ▸ 09/03	60626904	**508805**	
2.0 i V6 Turbo	E	1996	AR34102		10/98 ▸ 09/03	60626904	**508805**	
2.5 i V6 24V	E	2492	AR36201, AR34201		10/98 ▸ 09/03	60617282	**508805**	
3.0 i V6 24V	E	2959	AR34301, AR36101		10/98 ▸ 09/03	60617282	**508805**	
2.4 JTD	D	2387	841C.000		02/02 ▸ 09/03	60617282	**508805**	
166 (2003>)								
2.0 i Twin Spark 16V	E	1970	AR36301	Kit	10/03 ▸	71737165	**509920**	
2.5 i V6 24V	E	2492	AR36201	Kit	10/03 ▸	71737165	**509920**	
3.0 i V6 24V	E	2959	AR36101	Kit	10/03 ▸	71737165	**509920**	
3.2 i V6 24V	E	3179	936A.000	Kit	10/03 ▸	71737165	**509920**	
2.4 JTD 10V, 2.4 JTD 20V	D	2387	841H.000, 841C.000 841N.000, 841G.000 841M.000	Kit	10/03 ▸	71737165	**509920**	
BRERA								
2.2 JTS 16V	E	2198	939A5.000	Kit	01/06 ▸	71748263	**509933**	
3.2 JTS V6 24V	E	3196	939A.000	Kit	01/06 ▸	71748263	**509933**	
2.4 JTDM 20V	D	2387	939A3.000	Kit	01/06 ▸	71748263	**509933**	

		CC				OE	Valeo	
ALFA ROMEO (.../...)								
GTV (95>2003)								
2.0 V6 Turbo	E	1997	AR16202		03/95 ▸ 02/03	60656701	**508805**	
2.0 V6 Turbo	E	1997	AR16202		03/95 ▸ 02/03	60810200	**508630**	
SPIDER (95>2003)								
2.0 i V6 Turbo	E	1997	AR16202		02/95 ▸ 02/03	60656701	**508805**	
AUDI								
80 (91>95)								
1.6 i ▸ 8CP090829	E	1595	ABB		03/92 ▸ 09/92	8A0820191B	**508880**	
1.6 i	E	1595	ADA, ABB		08/92 ▸ 07/95	8A0820191AB	**508881**	
2.0 E, 2.0 S, 2.0 i 16V ▸ 8CP090829	E	1984	ABT, ABK, 6A		09/91 ▸ 09/92	8A0820191B	**508880**	
2.0 E, 2.0 E 16V, 2.0 S 2.0 i 16V 8CP090830 ▸	E	1984	ABT, ABK, ACE, ADW, 6A		09/92 ▸ 07/95	8A0820191AB	**508881**	
2.2 Turbo	E	2226	ABY, ADU		02/93 ▸ 06/95	8A0820191AB	**508881**	
2.3 E ▸ 8CP090829	E	2309	NG		09/91 ▸ 09/92	8A0820191B	**508880**	
2.3 E 8CP090830 ▸	E	2309	NG		08/92 ▸ 06/95	8A0820191AB	**508881**	
2.6 E V6 ▸ 8CP090829	E	2598	ABC		07/92 ▸ 09/92	8A0820191B	**508880**	
2.6 E V6	E	2598	ACZ, ABC		07/92 ▸ 07/95	8A0820191AB	**508881**	
2.8 i V6 ▸ 8CP090829	E	2771	AAH		09/91 ▸ 09/92	8A0820191B	**508880**	
2.8 i V6	E	2771	AAH		08/92 ▸ 07/95	8A0820191AB	**508881**	
1.9 TD, 1.9 TDi	D	1896	1Z, AAZ		08/92 ▸ 07/95	8A0820191AB	**508881**	
1.9 TD, 1.9 TDi 8CP090830 ▸	D	1896	1Z, AAZ		07/93 ▸ 06/95	4A0820191AB	**508882**	
90 (87>92)								
2.0 i	E	1994	PS		08/89 ▸ 06/92	8A0820191B	**508880**	
2.2 i	E	2226	KV		08/89 ▸ 06/92	8A0820191B	**508880**	
2.3 i	E	2309	NG		08/89 ▸ 06/92	8A0820191B	**508880**	
1.6 TD	D	1588	RA, SB		08/89 ▸ 06/92	8A0820191B	**508880**	
100 (90>94)								
1.6, 1.6 i 4A-P-032 004 ▸	E	1595	ABB		10/92 ▸ 06/93	4A0820191AA	**508885**	
1.6, 1.6 i 4A-P-032 004 ▸	E	1595	ABB		10/92 ▸ 06/93	4A0820191AB	**508882**	
2.0, 2.0 16V, 2.0 i, 2.0 i 16V 4A-P-032 004 ▸	E	1984	AAE, ABK, AAD, ACE		10/92 ▸ 07/94	4A0820191AB	**508882**	
2.0, 2.0 16V, 2.0 i, 2.0 i 16V	E	1984	ABK, ACE, AAE, AAD, ADW		10/92 ▸ 07/94	4A0820191AA	**508885**	
2.2 4A-P-052 505 ▸	E	2226	AAN		11/92 ▸ 07/94	4A0820191AB	**508882**	
2.3, 2.3 i 4A-P-032 004 ▸	E	2309	AAR		10/92 ▸ 07/94	4A0820191AB	**508882**	
2.6 V6, 2.6 i V6 4A-P-052 504 ▸	E	2598	ABC, ACZ		07/92 ▸ 07/94	4A0820191AB	**508882**	
2.6 V6, 2.6 i V6 4A-P-032 004 ▸	E	2598	ACZ, ABC		10/92 ▸ 07/94	4A0820191AA	**508885**	
2.8 i V6 4A-P-032 004 ▸	E	2771	AAH		10/92 ▸ 07/94	4A0820191AA	**508885**	
2.8 i V6 4A-P-060 001 ▸	E	2771	AAH		10/92 ▸ 07/94	4A0820191AB	**508882**	

Bouteille déshydratante/
Cartouche déshydratante/
Accumulateur
Receiver dryer/
Cartridge dryer/
Accumulator

Trockner/
Trocknerkartusche/
Akkumulator
Filtro Deshidratante/
Cartucho deshidratante/
Acumulador

Filtro seco/
Accumulator
Filtro Disidratatore/
Cartuccia disidratante/
Accumulatore

Valeo

		cc				OE	Valeo	
AUDI (.../...)								
100 (90>94) (.../...)								
4.2	E	4172	ABH		10/92 ▸ 07/94	4A0820191AB	**508882**	
2.4 D 4A-P-032 004 ▸	D	2370	AAS		10/92 ▸ 07/94	4A0820191AB	**508882**	
2.5 TDi 4A-P-032 004 ▸	D	2460	AAT		10/92 ▸ 07/94	4A0820191AB	**508882**	
A2 (2000>2005)								
1.4 i 16V	E	1390	AUA,BBY		06/00 ▸ 08/05	8Z0820193B	**509931**	
1.6 FSi	E	1595	BAD		05/02 ▸ 08/05	8Z0820193B	**509931**	
1.2 TDi	D	1191	ANY		04/01 ▸ 08/05	8Z0820193B	**509931**	
1.4 TDi	D	1422	ATL,BHC,AMF		06/00 ▸ 08/05	8Z0820193B	**509931**	
A3 (96>2003)								
1.6 i	E	1595	BFQ, AKL, AEH, APF, AVU		09/96 ▸ 06/03	1J0820191D	**508811**	
1.8 i 20V, 1.8 i Turbo 20V	E	1781	ARY, APG, ARZ, AGN, AUQ AUM, ARX, AGU, AJQ, AQA APP		09/96 ▸ 06/03	1J0820191D	**508811**	
1.9 TDi	D	1896	AHF, AGR, AXR, ALH, ASV ASZ, ATD		09/96 ▸ 06/03	1J0820191D	**508811**	
A3 (2003>)								
1.4 TFSi	E	1390	CAX	Kit	09/07 ▸	1K0298403A	**509790**	
1.6 i	E	1595	BGU, BSE, BSF	Kit	05/03 ▸	1K0298403A	**509790**	
1.6 FSi	E	1598	BAG, BLP, BLF	Kit	08/03 ▸	1K0298403A	**509790**	
1.8 TFSi 16V	E	1798	BYT	Kit	08/06 ▸	1K0298403A	**509790**	
2.0 i 16V, 2.0 FSi 16V 2.0 TFSi	E	1984	BLX, AXW, AXX, BLY, BMB BWA, BVY, BLR, BVZ	Kit	05/03 ▸	1K0298403A	**509790**	
3.2 i 24V, 3.2 i V6 24V	E	3189	BMJ, BDB, BUD	Kit	07/03 ▸	1K0298403A	**509790**	
1.9 TDi	D	1896	BKC, BXE, BLS	Kit	06/03 ▸	1K0298403A	**509790**	
2.0 TDi, 2.0 TDi 16V	D	1968	AZV, BKD, BMM, BMN, BUY	Kit	05/03 ▸	1K0298403A	**509790**	
A4 (94>2000)								
1.6 i	E	1595	AHL, ANA, ARM		08/97 ▸ 12/98	4B0820192	**508881**	
1.6 i	E	1595	ARM, ANA, AHL		01/99 ▸ 11/00	8D0820193A	**509733**	
1.8 i, 1.8 i 20V 1.8 i Turbo 20V	E	1781	APU, ADR, AEB, ARK, AFY AJL, ARG		08/97 ▸ 12/98	4B0820193	**508881**	
1.8 i, 1.8 i 20V 1.8 i Turbo 20V	E	1781	ANB, AJL, AFY, ADR, APU APT, ARG, AWT, ARK		01/99 ▸ 11/00	8D0820193A	**509733**	
2.4 i V6	E	2393	AGA, AJG, ARJ, APS, AML ALF, APZ, AFM		08/97 ▸ 12/98	4B0820192	**508881**	
2.4 i V6, 2.4 i V6 30V	E	2393	APZ, APS, AML, ARJ		02/99 ▸ 11/00	8D0820193A	**509733**	
2.6 i V6	E	2598	ABC, ACZ		08/97 ▸ 12/98	4B0820193	**508881**	
2.8 i V6 30V	E	2771	ALG, AMX, ACK, APR, AQD		08/97 ▸ 12/98	4B0820192	**508881**	
2.8 i V6, 2.8 i V6 30V	E	2771	AQD, APR, ATQ, AMX, ATX		01/99 ▸ 09/01	8D0820193A	**509733**	
1.9 TDi	D	1896	AHU, AFF, AFN, AHH		08/97 ▸ 12/98	4B0820193	**508881**	
1.9 TDi	D	1896	AHU, AFN, AVG, AHH		01/99 ▸ 11/00	8D0820193A	**509733**	
1.9 TDi	D	1896	ATJ, AJM		07/99 ▸ 09/01	8D0820193	**509501**	
2.5 TDi V6	D	2496	AFB, AKN		11/97 ▸ 12/98	4B0820192	**508881**	
2.5 TDi V6, 2.5 TDi V6 24V	D	2496	AFB, AKN		11/97 ▸ 11/00	8D0820193	**509501**	
A4 (2000>2004)								
1.6 i	E	1595	ALZ		02/03 ▸ 12/04	8E0820193E	**509907**	
1.8 i Turbo 20V	E	1781	AMB, BEX, BMB		02/03 ▸ 12/04	8E0820193E	**509907**	
2.0 i 20V, 2.0 FSi	E	1984	ALT, AWA		02/03 ▸ 12/04	8E0820193E	**509907**	
2.4 i V6 30V	E	2393	AMM, BDV		02/03 ▸ 12/04	8E0820193E	**509907**	
3.0 i V6 30V	E	2976	ASN, AVK, BBJ		02/03 ▸ 12/04	8E0820193E	**509907**	
1.9 TDi	D	1896	AVB, AVF, AWX, BKE		02/03 ▸ 12/04	8E0820193E	**509907**	

• **New** Nouveau **Neu** Nuevo **Novo** Nuovo **Nieuw** Nowi **Новый** Novy **Nou** Yeni **Νέους**

		CC				OE	Valeo	
AUDI (.../...)								
A4 (2000>2004) (.../...)								
2.5 TDi V6	D	2496	AKE, BAU, BCZ, BDG, BDH BFC		02/03 ▸ 12/04	8E0820193E	**509907**	
A4 (2004>)								
1.6 i	E	1595	ALZ		11/04 ▸	8E0820193E	**509907**	
1.8 i Turbo 20V	E	1781	BFB		11/04 ▸	8E0820193E	**509907**	
2.0 i 20V, 2.0 TFSi 16V	E	1984	BWE, BGB, ALT		11/04 ▸	8E0820193E	**509907**	
2.0 TFSi 16V	E	1996	BUL		11/04 ▸	8E0820193E	**509907**	
3.0 i 30V	E	2976	BBJ		11/04 ▸	8E0820193E	**509907**	
3.2 FSi V6 24V	E	3123	AUK		11/04 ▸	8E0820193E	**509907**	
1.9 TDi	D	1896	BRB, BKE		11/04 ▸	8E0820193E	**509907**	
2.0 TDi, 2.0 TDi 16V	D	1968	BRF, BNA, BRE, BPW, BRD BVF, BLB, BVG		11/04 ▸	8E0820193E	**509907**	
2.5 TDi V6	D	2496	BCZ, BDG		11/04 ▸	8E0820193E	**509907**	
2.7 TDi 24V	D	2698	BPP, BSG		11/05 ▸	8E0820193E	**509907**	
3.0 TDi V6 24V	D	2967	BKN, ASB		11/04 ▸	8E0820193E	**509907**	
A4 CABRIOLET (2002>2005)								
1.8 i Turbo 20V	E	1781	BFB		02/03 ▸ 12/05	8E0820193E	**509907**	
2.0 i 20V	E	1984	ALT		11/04 ▸ 12/05	8E0820193E	**509907**	
2.4 i V6 30V	E	2393	AMM, BDV		02/03 ▸ 12/05	8E0820193E	**509907**	
3.0 i V6 30V	E	2976	ASN, BBJ		02/03 ▸ 12/05	8E0820193E	**509907**	
2.5 TDi V6	D	2496	BCZ, BDG		02/03 ▸ 12/05	8E0820193E	**509907**	
A4 CABRIOLET (2006>)								
1.8 i Turbo 20V	E	1781	BFB		01/06 ▸	8E0820193E	**509907**	
2.0 TFSi 16V	E	1984	BWE		01/06 ▸	8E0820193E	**509907**	
3.2 FSi V6 24V	E	3123	AUK		01/06 ▸	8E0820193E	**509907**	
2.0 TDi	D	1968	BPW, BRC		01/06 ▸	8E0820193E	**509907**	
2.7 Tdi V6 24V	D	2698	BPP		01/06 ▸	8E0820193E	**509907**	
3.0 Tdi V6 24V	D	2967	ASB, BKN		01/06 ▸	8E0820193E	**509907**	
A6 (94>97)								
1.8 E, 1.8 E 20V, 1.8 i 20V	E	1781	ADR		07/95 ▸ 09/97	4A0820191AA	**508885**	
1.8 E, 1.8 E 20V, 1.8 i 20V	E	1781	ADR		07/95 ▸ 09/97	4A0820191AB	**508882**	
2.0 E, 2.0 E 16V, 2.0 i 2.0 i 16V	E	1984	ABK, ACE, AAE, ADW		07/94 ▸ 09/97	4A0820191AA	**508885**	
2.0 E, 2.0 E 16V, 2.0 i 2.0 i 16V	E	1984	ABK, ADW, AAE, ACE		07/94 ▸ 09/97	4A0820191AB	**508882**	
2.3 E	E	2309	AAR		07/94 ▸ 06/96	4A0820191AA	**508885**	
2.3 E	E	2309	AAR		07/94 ▸ 06/96	4A0820191AB	**508882**	
2.4 i V6	E	2393	AFM		07/95 ▸ 03/97	4A0820191AB	**508882**	
2.6 E V6	E	2598	ABC, ACZ		07/94 ▸ 09/97	4A0820191AA	**508885**	
2.6 E V6	E	2598	ABC, ACZ		07/94 ▸ 09/97	4A0820191AB	**508882**	
2.8 E V6, 2.8 E V6 30V, 2.8 i V6	E	2771	AAH, ACK, AEJ		07/94 ▸ 09/97	4A0820191AB	**508882**	
2.8 E V6, 2.8 E V6 30V, 2.8 i V6	E	2771	ACK, AAH, AEJ		07/94 ▸ 09/97	4A0820191AA	**508885**	
1.9 TDi	D	1896	1Z, AHU		07/94 ▸ 03/97	4A0820191AB	**508882**	
1.9 TDi	D	1896	AHU, 1Z		07/94 ▸ 03/97	4A0820191AA	**508885**	
2.5 TDi	D	2460	AAT, AEL		07/94 ▸ 03/97	4A0820191AA	**508885**	
2.5 TDi	D	2460	AAT, AEL		07/94 ▸ 09/97	4A0820191AB	**508882**	
A6 (97>2001)								
1.8 i 20V, 1.8 i Turbo 20V	E	1781	AJL, AJP, APU, AEB, ARK AFY, ARH, AQE, ANB		04/97 ▸ 03/99	4B0820192	**508881**	
1.8 i 20V, 1.8 i Turbo 20V 4B-X-090 001 ▸	E	1781	ANB, AJP, AJL, AFY, AWT APU, AQE, ARK, ARH		03/99 ▸ 05/01	8D0820193A	**509733**	
1.8 i 20V, 1.8 i Turbo 20V 4B-X-090 001 ▸	E	1781	AQE, AJP, ANB, AWT, AFY ARK, APU, AJL, ARH		03/99 ▸ 05/01	8D0820193	**509501**	

Bouteille déshydratante/
Cartouche déshydratante/
Accumulateur
Receiver dryer/
Cartridge dryer/
Accumulator

Trockner/
Trocknerkartusche/
Akkumulator
Filtro Deshidratante/
Cartucho deshidratante/
Acumulador

Filtro seco/
Accumulator
Filtro Disidratatore/
Cartuccia disidratante/
Accumulatore

Valeo

		cc				OE	Valeo	
AUDI (.../...)								
A6 (97>2001) (.../...)								
2.4 i V6	E	2393	AGA, APS, APZ, APC, ARJ AJG, ALF, ARN, ALW		04/97 ▸ 03/99	4B0820192	**508881**	
2.4 i V6 4B-X-090 001 ▸	E	2393	AML, APZ, ARJ, APC, ARN APS, ASM, AMM		03/99 ▸ 05/01	8D0820193A	**509733**	
2.4 i V6 4B-X-090 001 ▸	E	2393	APS, AML, AMM, ARN, APZ ARJ, ASM, APC		03/99 ▸ 05/01	8D0820193	**509501**	
2.7 i V6 Bi Turbo ▸ 4B-X-090 000	E	2671	AJK		01/98 ▸ 03/99	4B0820192	**508881**	
2.7 i V6 Bi Turbo ▸ 4B-Y-200 000	E	2671	AJK		01/98 ▸ 04/00	8D0820193	**509501**	
2.7 i V6 Bi Turbo 4B-X-090 001 ▸	E	2671	AJK, AZA		03/99 ▸ 05/01	8D0820193A	**509733**	
2.7 i V6 Bi turbo	E	2671	AZA, AJK		05/00 ▸ 05/01	4B0820193A	**509704**	
2.8 i V6 30V	E	2771	ACK, APR, ALG, AQD, AGE		04/97 ▸ 03/99	4B0820192	**508881**	
2.8 i V6 30V	E	2771	AMX, APR, ATX, AGE, AQD		03/99 ▸ 05/01	8D0820193A	**509733**	
2.8 i V6 30V 4B-X-090 001 ▸	E	2771	APR, AQD, AGE, ATX, AMX		03/99 ▸ 05/01	8D0820193	**509501**	
1.9 TDi	D	1896	AJM, AFN		04/97 ▸ 03/99	4B0820192	**508881**	
1.9 TDi 4B-X-090 001 ▸	D	1896	AFN, AVG, AJM		03/99 ▸ 05/01	8D0820193A	**509733**	
1.9 TDi ▸ 4B-Y-200 000	D	1896	AJM, AFN, AVG		01/98 ▸ 05/01	8D0820193	**509501**	
1.9 TDi	D	1896	AJM		05/00 ▸ 05/01	4B0820193A	**509704**	
2.5 TDi V6 ▸ 4B-X-090 000	D	2496	AFB, AKN		04/97 ▸ 03/99	4B0820192	**508881**	
2.5 TDi V6 4B-X-090 001 ▸	D	2496	AFB, AKN, AKE		03/99 ▸ 05/01	8D0820193	**509501**	
2.5 TDi V6 4B-X-090 001 ▸	D	2496	AKN, AFB, AKE		03/99 ▸ 05/01	8D0820193A	**509733**	
2.5 TDi V6 4B-1-000 001 ▸	D	2496	AKE		05/00 ▸ 05/01	4B0820193A	**509704**	
A6 (2001>2004)								
1.8 i Turbo 20V	E	1781	AWT		06/01 ▸ 05/04	8D0820193A	**509733**	
2.0 i, 2.0 i 20V	E	1984	ALT		06/01 ▸ 05/04	8D0820193A	**509733**	
2.4 i V6 30V	E	2393	ASM, BDV, AMM		06/01 ▸ 05/04	8D0820193A	**509733**	
2.7 i V6 Bi Turbo	E	2671	ARE, BES		06/01 ▸ 01/05	4B0820193A	**509704**	
3.0 i V6 30V	E	2976	BBJ, ASN		06/01 ▸ 05/04	8D0820193A	**509733**	
1.9 TDi	D	1896	AWX, AVF		06/01 ▸ 01/05	8D0820193A	**509733**	
2.5 TDi V6	D	2496	BFC, BDH, AKE, BAU, AYM		06/01 ▸ 01/05	4B0820193A	**509704**	
2.5 TDi V6	D	2496	BCZ, BDG		02/03 ▸ 01/05	8E0820193E	**509907**	
A6 ALLROAD (2000>)								
2.7 i V6 Turbo	E	2671	BES, ARE		05/00 ▸ 06/02	4B0820193A	**509704**	
4.2 i V8 40V	E	4172	BAS		09/02 ▸	4B0820193A	**509704**	
2.5 TDi V6	D	2496	BAU, AKE		05/00 ▸ 05/03	4B0820193A	**509704**	
CABRIOLET								
1.8 E 20V	E	1781	ADR		04/97 ▸ 08/00	8A0820191AB	**508881**	
2.0 E, 2.0 E 16V	E	1984	ABK, ACE		01/93 ▸ 09/98	8A0820191AB	**508881**	
2.6 E V6	E	2598	ABC		01/94 ▸ 08/00	8A0820191AB	**508881**	
2.8 E V6	E	2771	AAH		11/92 ▸ 08/00	8A0820191AB	**508881**	
1.9 TDi	D	1896	1Z, AHU		07/95 ▸ 08/00	4A0820191AB	**508882**	
COUPE (88>96)								
2.0 E, 2.0 E 16V, 2.0 i 16V ▸ 8B-P-002 045	E	1984	ABK, ACE, 6A		08/91 ▸ 09/92	8A0820191B	**508880**	

• **New** Nouveau **Neu** Nuevo **Novo** Nuovo **Nieuw** Nowi **Новый** Novy **Nou** Yeni **Νέους**

		CC			2 3	OE	Valeo	
AUDI (.../...)								
COUPE (88>96) (.../...)								
2.0 E, 2.0 E 16V 8B-P-002 046 ▸	E	1984	ABK, ACE		10/92 ▸ 01/96	8A0820191AB	**508881**	
2.2 Turbo 8B-P-002 762 ▸	E	2226	ABY		08/91 ▸ 05/95	8A0820191AB	**508881**	
2.3 E, 2.3 Turbo 20V 8B-N-000 001 ▸ 8B-P-002 045	E	2309	NG, 3B		08/91 ▸ 09/92	8A0820191B	**508880**	
2.3 E 8B-P-002 046 ▸	E	2309	NG		10/92 ▸ 07/94	8A0820191AB	**508881**	
2.6 E V6 ▸ 8B-P-002 045	E	2598	ABC		08/92 ▸ 10/92	8A0820191B	**508880**	
2.6 E V6 8B-P-002 046 ▸	E	2598	ABC		10/92 ▸ 01/96	8A0820191AB	**508881**	
2.8 E V6 ▸ 8B-P-002 761	E	2771	AAH		08/91 ▸ 10/92	8A0820191B	**508880**	
2.8 E V6 8B-P-002 761 ▸	E	2771	AAH		10/92 ▸ 05/95	8A0820191AB	**508881**	
S3								
1.8 i Turbo 20V	E	1781	BAM, AMK, APY		11/98 ▸ 06/03	1J0820191D	**508811**	
1.8 i Turbo 20V	E	1800	AUL		09/99 ▸ 04/01	1J0820191D	**508811**	
S4 (97>2001)								
2.7 i V6 Bi Turbo 30V	E	2671	AGB, APB		10/97 ▸ 09/01	8D0820193	**509501**	
RS6 QUATTRO								
4.2 i V8 40V	E	4172	BCY		07/02 ▸ 09/04	4B0820193A	**509704**	
S6 (94>97)								
2.2 Turbo 20V, 2.2 i Turbo 20V	E	2226	AAN		07/94 ▸ 07/97	4A0820191AB	**508882**	
4.2 i V8 32V	E	4172	AEC, AHK		07/94 ▸ 10/97	4A0820191AB	**508882**	
TT (98>2006)								
1.8 i Turbo 20V	E	1781	AJQ, ARY, APP, APX, BAM AUM, AUQ		10/98 ▸ 07/06	1J0820191D	**508811**	
3.2 i V6	E	3189	BHE		04/03 ▸	1J0820191D	**508811**	
TT (2006>)								
2.0 TFSi	E	1984	BWA	Kit	08/06 ▸	1K0298403A	**509790**	
Quattro 3.2 i V6 24V	E	3189	BUD	Kit	08/06 ▸	1K0298403A	**509790**	
BMW								
1 SERIES E81								
1.6 i 16V	E	1597	N43B16A		09/07 ▸	64536936557	**509935**	
2.0 i 16V	E	1995	N43B/20O0/20U0		01/07 ▸	64536936557	**509935**	
3.0 i 24V	E	2996	N52B/30O1/30U1		01/07 ▸	64536936557	**509935**	
2.0 d 16V	D	1995	N47D/20U0/20O0		01/07 ▸	64536942025	**509916**	
1 SERIES E87								
118i, 120i	E	1995	N46B/20U1/20O1		09/04 ▸ 02/07	64536936557	**509935**	
130i	E	2996	N52B30A		07/05 ▸ 02/07	64536936557	**509935**	
118d, 120d	D	1995	M47D/20/20TU2		09/04 ▸ 02/07	64536942025	**509916**	
1 SERIES E87 LCI								
1.6 i 16V	E	1596	N45B16		09/04 ▸	64536936557	**509935**	
1.6 i 16V	E	1597	N43B16O0		09/07 ▸	64536936557	**509935**	
2.0 i 16V	E	1995	N43B/20O0/20U0		03/07 ▸	64536936557	**509935**	

		cc				OE	Valeo	
BMW (.../...)								
1 SERIES E87 LCI (.../...)								
3.0 i 24V	E	2996	N52B30O1		03/07 ▸	64536936557	**509935**	
2.0 d 16V	D	1995	N47D/20U0/20O0		03/07 ▸	64536942025	**509916**	
3 SERIES E36								
316i	E	1596	M43B16, M40B16ME.8		12/90 ▸ 04/01	64538391313	**508599**	
318i, 318iS, 318ti	E	1796	M43B/18, M42B/18, M40B18		12/90 ▸ 02/00	64538391313	**508599**	
316i, 318ti	E	1895	M43B/19-E46, M44B/19 M43B19-E46G		01/96 ▸ 04/01	64538375754	**509391**	
318iS	E	1895	M44B19		12/95 ▸ 02/00	64538391313	**508599**	
320i	E	1991	M52B20, M50B20		12/90 ▸ 02/00	64538391313	**508599**	
323i, 325i	E	2494	M50B25, M52B25		12/90 ▸ 02/00	64538391313	**508599**	
323ti	E	2494	M52B/25/25-EU3		08/97 ▸ 04/01	64538375754	**509391**	
328i	E	2793	M52B28		01/95 ▸ 02/00	64538391313	**508599**	
318tds	D	1665	M41D		09/94 ▸ 04/01	64538391313	**508599**	
325td, 325tds	D	2497	M51A, M51D25		08/91 ▸ 09/99	64538391313	**508599**	
3 SERIES E46								
316i, 316ti	E	1796	N42B/18VVT/18		05/01 ▸	64538377330	**509558**	
316i, 318Ci, 318i	E	1895	M43B19-E46		03/98 ▸	64538377330	**509558**	
320Ci, 320i	E	1991	M52B20-EU3		03/98 ▸ 09/01	64538377330	**509558**	
318Ci, 318i, 318ti	E	1995	N42B/20VVT/20, M43B20		09/01 ▸	64538377330	**509558**	
320Ci, 320i	E	2171	M54B22		07/00 ▸	64538377330	**509558**	
323CI, 323i, 325Ci, 325i, 325ti 325xi	E	2494	M52B/25-EU3, M54B/25-EU4/25		03/98 ▸	64538377330	**509558**	
325Ci, 325i, 325xi	E	2497	M54B25-EU4		01/03 ▸	64538377330	**509558**	
328Ci, 328i	E	2793	M52B28-EU3		03/98 ▸ 12/00	64538377330	**509558**	
330Ci, 330i, 330xi	E	2979	M54B/30-231/30		01/99 ▸	64538377330	**509558**	
318d, 320d	D	1951	M47D/20/20UL		03/98 ▸ 08/01	64538377330	**509558**	
318d, 318td, 320Cd, 320d, 320td	D	1995	M47D/20TU/20TUUL		09/01 ▸	64538377330	**509558**	
330d, 330xd	D	2926	M57D30-183		09/99 ▸ 08/01	64538377330	**509558**	
330Cd, 330d, 330xd	D	2993	M57D/30TU/30-204		09/01 ▸	64538377330	**509558**	
3 SERIES E90								
316i	E	1596	N45B16		03/05 ▸ 01/07	64536936557	**509935**	
316i	E	1597	N43B16A		02/07 ▸	64536936557	**509935**	
316i	E	1796	N42B18VVT		02/06 ▸	64536936557	**509935**	
318i, 320i	E	1995	N43B/20O0, N46B/20O1 N43B/20U0, N46B20U1		03/05 ▸	64536936557	**509935**	
320si	E	1997	N45B20A		02/06 ▸	64536936557	**509935**	
325i, 325xi	E	2497	N52B/25O0/25A		03/05 ▸	64536936557	**509935**	
330i, 330xi	E	2996	N52B/30O0, N53B/30O0/30U0 N52B30A		03/05 ▸	64536936557	**509935**	
335i	E	2979	N54B30A		06/06 ▸	64536942025	**509916**	
318d, 320d	D	1995	M47D/20/20TU2		03/05 ▸	64536942025	**509916**	
325d, 330d, 330xd, 335d	D	2993	M57D/30T2/30TU2/30U2		09/05 ▸	64536942025	**509916**	
5 SERIES E39								
520i	E	1991	M52B20		07/96 ▸ 09/98	64538372985	**509392**	
520i	E	1991	M52B/20-EU3/20		09/98 ▸ 07/00	64538377330	**509558**	
520i	E	2171	M54B22		07/00 ▸ 04/04	64538377330	**509558**	
523i	E	2494	M52B25		09/95 ▸ 09/98	64538391793	**509392**	
523i, 525i	E	2494	M54B/25, M52B/25/25-EU3		09/98 ▸ 04/04	64538377330	**509558**	
528i	E	2793	M52B28		09/95 ▸ 09/98	64538375760	**509392**	
528i	E	2793	M52B/28-EU3/28		09/98 ▸ 07/00	64538377330	**509558**	
530i	E	2979	M54B30-231		07/00 ▸ 04/04	64538377330	**509558**	
535i	E	3498	M62B35		07/96 ▸ 09/98	64538375760	**509392**	
535i	E	3498	M62B/35/35-245		09/98 ▸ 04/03	64538377330	**509558**	
540i	E	4398	M62B44		07/96 ▸ 09/98	64538375760	**509392**	

		CC				OE	Valeo	

BMW (.../...)

5 SERIES E39 (.../...)

540i	E	4398	M62B/44/44-285		09/98 ▸ 04/04	64538377330	**509558**	
520d	D	1951	M47D20		01/00 ▸ 04/04	64538377330	**509558**	
525Td, 525Tds, 525d	D	2497	M51D25, M57D25		09/97 ▸ 04/04	64538378684	**509393**	
525d	D	2497	M57D25		01/00 ▸ 04/04	64538377330	**509558**	
530d	D	2926	M57D30-183/193		09/98 ▸ 04/04	64538377330	**509558**	

5 SERIES E60

520i	E	2171	M54B22		05/03 ▸ 03/05	64536907402	**509936**	
525i	E	2494	M54B25-6S5		09/03 ▸ 02/05	64536907402	**509936**	
523i, 525i, 525xi	E	2497	N52B/25UL/25O0		03/05 ▸	64536907402	**509936**	
530i	E	2979	M54B30-231		05/03 ▸ 02/05	64536907402	**509936**	
530i, 530xi	E	2996	N52B30O0		03/05 ▸	64536907402	**509936**	
540i	E	4000	N62B40TU		09/05 ▸	64536907402	**509936**	
545i	E	4398	N62B44VVT		05/03 ▸ 09/05	64536907402	**509936**	
550i	E	4799	N62B48TU		09/05 ▸	64536907402	**509936**	

6 SERIES E63/E64

630i	E	2996	N52B30O0		09/04 ▸	64536907402	**509936**	
645Ci	E	4398	N62B44VVT		09/03 ▸	64536907402	**509936**	
650i	E	4799	N62B48TU		03/05 ▸	64536907402	**509936**	
635d	D	2993	M57D30T2		09/07 ▸	64536907402	**509936**	

7 SERIES E38

728i	E	2793	M52B28		07/95 ▸ 11/97	64538375757	**509394**	
728i	E	2793	M52B/28-EU3/28		11/97 ▸ 08/01	64538377330	**509558**	
730i	E	2997	M60B30		06/94 ▸ 11/97	64538372978	**509394**	
730i	E	2997	M60B30		11/97 ▸ 08/01	64538377330	**509558**	
735i	E	3498	M62B35		04/96 ▸ 11/97	64538375757	**509394**	
735i	E	3498	M62B35		11/97 ▸ 08/01	64538377330	**509558**	
740i	E	3982	M60B40		06/94 ▸ 03/96	64538372978	**509394**	
740i	E	4398	M62B44		04/96 ▸ 11/97	64538375757	**509394**	
740i	E	4398	M62B44		11/97 ▸ 08/01	64538377330	**509558**	
750i	E	5379	M73B54		06/94 ▸ 11/97	64538375757	**509394**	
750i	E	5379	M73B54		11/97 ▸ 08/01	64538377330	**509558**	
725Tds	D	2497	M51D25		09/97 ▸ 08/01	64538378683	**509395**	
730d	D	2926	M57D30-183		09/98 ▸ 09/00	64538377330	**509558**	
730d	D	2926	M57D30-193		09/00 ▸ 04/04	64538377330	**509558**	
740d	D	3901	M67D40		03/99 ▸ 08/01	64538377330	**509558**	

7 SERIES E65

730i	E	2979	M54B30		09/03 ▸ 02/05	64536907402	**509936**	
730i	E	2996	N52B30O0		03/05 ▸	64536907402	**509936**	
735i	E	3600	N62B36VVT		09/01 ▸ 02/05	64536907402	**509936**	
740i	E	4000	N62B40TU		03/05 ▸	64536907402	**509936**	
745i	E	4398	N62B44VVT		09/01 ▸ 02/05	64536907402	**509936**	
750i	E	4799	N62B48TU		03/05 ▸	64536907402	**509936**	
760i	E	5972	N73B60A		02/03 ▸	64536907402	**509936**	
740d	D	3901	M67D40		09/02 ▸ 02/05	64536907402	**509936**	
745d	D	4423	448D1		03/05 ▸	64536907402	**509936**	

7 SERIES E66

730Li	E	2979	M54B30		09/03 ▸ 02/05	64536907402	**509936**	
730Li	E	2996	N52B30O0		03/05 ▸	64536907402	**509936**	
735Li	E	3600	N62B36VVT		03/02 ▸ 02/05	64536907402	**509936**	
740Li	E	4000	N62B40TU		03/05 ▸	64536907402	**509936**	
745Li	E	4398	N62B44VVT		03/02 ▸ 02/05	64536907402	**509936**	
750Li	E	4799	N62B48TU		03/05 ▸	64536907402	**509936**	

		cc				OE	Valeo	
BMW (.../...)								
7 SERIES E66 (.../...)								
760Li	E	5972	N73B60A		02/03 ▸	64536907402	**509936**	
M3 E36								
3.0 i	E	2990	S50B/30/30GT		06/92 ▸ 07/95	64538391313	**508599**	
3.2 i	E	3201	S50B32		07/95 ▸ 06/00	64538391313	**508599**	
M3 E46								
3.2 i	E	3246	S54B32		07/00 ▸	64538377330	**509558**	
M5 E39								
5.0 i	E	4941	S62B50		07/99 ▸ 08/03	64538377330	**509558**	
X3 E83 (2003>)								
2.0 i	E	1995	N46B20OL		09/05 ▸	64538377330	**509558**	
2.5 i	E	2494	M54B25-EU4		03/04 ▸	64538377330	**509558**	
3.0 i	E	2979	M54B30-231		10/03 ▸	64538377330	**509558**	
2.0 d	D	1995	M47D20TU		09/04 ▸	64538377330	**509558**	
3.0 d	D	2993	M57D30TU-204/TU-218		10/03 ▸	64538377330	**509558**	
X3 E83 (2006>)								
2.0 i	E	1995	N46B20B		09/06 ▸	64538377330	**509558**	
2.5 Si	E	2497	N52B25A		09/06 ▸	64538377330	**509558**	
3.0 Si	E	2996	N52B30A		09/06 ▸	64538377330	**509558**	
2.0 d	D	1995	M47D20TU		09/06 ▸	64538377330	**509558**	
3.0 d, 3.0 sd	D	2993	M57D/30TU/30T2		09/06 ▸	64538377330	**509558**	
X5 E53								
3.0 i 24V	E	2979	M54B30-231		01/00 ▸	64536942025	**509916**	
4.4 i	E	4398	M62B44, N62B44		01/00 ▸	64536942025	**509916**	
4.6 is	E	4619	M62B46		09/01 ▸	64536942025	**509916**	
4.8 is	E	4799	N62B48A		03/04 ▸	64536942025	**509916**	
3.0 d	D	2926	M57D30		03/01 ▸ 08/03	64536942025	**509916**	
3.0 d 24V	D	2993	M57D30TU		08/03 ▸	64536942025	**509916**	
Z3 E36								
1.8 i	E	1796	M43B18		01/96 ▸ 08/98	64538372977	**508599**	
1.9 i	E	1895	M44B19, M43B19-EU3		01/96 ▸ 09/98	64538372977	**508599**	
1.9 i	E	1895	M44B19, M43B19-EU3		09/98 ▸	64538375754	**509391**	
2.0 i	E	1991	M52B20-EU3		04/99 ▸	64538375754	**509391**	
2.2 i	E	2171	M54B22		08/00 ▸	64538375754	**509391**	
2.8 i	E	2793	M52B28		03/96 ▸ 09/98	64538372977	**508599**	
2.8 i	E	2793	M52B28		09/98 ▸	64538375754	**509391**	
3.0 i	E	2979	M54B30-231		06/00 ▸	64538375754	**509391**	
3.2 i	E	3201	S50B32		06/96 ▸ 09/98	64538372977	**508599**	
3.2 i	E	3201	S50B32		09/98 ▸ 04/01	64538375754	**509391**	
3.2 i	E	3246	S54B32-325		04/01 ▸	64538375754	**509391**	
Z4 E85								
2.0 i	E	1995	N46B20OL		04/05 ▸	64538377330	**509558**	
2.2 i	E	2171	M54B22		02/03 ▸	64538377330	**509558**	
2.5 i	E	2494	M54B25		02/03 ▸	64538377330	**509558**	
2.5 si	E	2497	N52B25A		01/06 ▸	64538377330	**509558**	
3.0 i	E	2979	M54B30		02/03 ▸	64538377330	**509558**	
3.0 si	E	2996	N52B30A		01/06 ▸	64538377330	**509558**	
M 3.2 i 24V	E	3246	S54B32		07/06 ▸	64538377330	**509558**	

		CC				OE	Valeo	
CHRYSLER								
300 C								
2.7 i	E	2736	2.7 FX		09/04 ▸	5137694AA	**509937**	
3.5 i	E	3518	3.5 CSP		09/04 ▸	5137694AA	**509937**	
5.7 i	E	5654	5.7		09/04 ▸	5137694AA	**509937**	
GRAND VOYAGER (91>96)								
3.3 i	E	3301	EGA		04/92 ▸ 10/95	4682592	**508899**	
2.5 TD	D	2499	MOU		10/93 ▸ 10/95	4682592	**508899**	
PT CRUISER								
1.6 i	E	1598	EJD		11/01 ▸	5017441AA	**509549**	
2.0 i 16V	E	1996	ECC		09/00 ▸	5017441AA	**509549**	
2.4 i 16V	E	2429	EDZ		06/00 ▸	5017441AA	**509549**	
2.4 i Turbo 16V	E	2429	EDZ-223		08/03 ▸	5017441AA	**509549**	
2.2 CRD	D	2148	EDJ		02/02 ▸	5017441AA	**509549**	
STRATUS								
2.0 i	E	1996	ECB		01/97 ▸	4596172	**508895**	
2.4 i	E	2429	EDZ		01/97 ▸	4596172	**508895**	
2.5 i V6	E	2497	EEB		01/97 ▸	4596172	**508895**	
VOYAGER (91>95)								
2.5 TD	D	2499	MOU		01/93 ▸ 10/95	4677138	**508898**	
VOYAGER (96>2001)								
2.0 i	E	1996	ECB		10/96 ▸ 03/01	4682592	**508899**	
2.4 i	E	2429	EDZ		01/96 ▸ 03/01	4682592	**508899**	
3.3 i	E	3301	EGA		10/96 ▸ 03/01	4682592	**508899**	
3.8 i	E	3778	EGH		10/96 ▸ 03/01	4682592	**508899**	
2.5 TD	D	2500	ENC		07/98 ▸ 03/01	4682592	**508899**	
CITROËN								
AX (86>91)								
1.0	E	954	TU9		09/86 ▸ 06/91	6455R1	**508597**	
1.1, 1.1 i	E	1124	TU1M, TU1, TU1CP		09/86 ▸ 06/91	6455R1	**508597**	
1.3	E	1294	TU24		04/87 ▸ 06/91	6455R1	**508597**	
1.4, 1.4 i	E	1360	TU3, TU3S, TU3CP, TU3A TU3M		09/86 ▸ 06/91	6455R1	**508597**	
1.4 D	D	1360	TUD3		09/88 ▸ 06/91	6455R1	**508597**	
AX (91>98)								
1.0, 1.0 i	E	954	TU9, TU9M		05/91 ▸ 07/98	6455R1	**508597**	
1.1, 1.1 i	E	1124	TU1M, TU1		05/91 ▸ 07/96	6455R1	**508597**	
1.4, 1.4 i	E	1360	TU3MC, TU3M, TU3.2, TU3J2 TU3S		05/91 ▸ 07/96	6455R1	**508597**	
1.4 D	D	1360	TUD3		05/91 ▸ 07/94	6455R1	**508597**	
1.5 D	D	1527	TUD5		07/94 ▸ 07/96	6455R1	**508597**	
BX								
1.4, 1.4 GPL, 1.4 i	E	1360	TU3A, XY6D, TU3.2, TU3M XY6, XY6C, XY7CP		09/82 ▸ 12/94	6455R1	**508597**	
1.6, 1.6 i	E	1580	XU5M, XU51C/52C, XU5CP XU5A/J/S, XU5STR, XU5J2		09/82 ▸ 12/94	6455R1	**508597**	
1.9, 1.9 i, 1.9 i 16S	E	1905	XU9J1/A, XU9M/S, XU92C+ XU9S, XU9J2/4, XU92C		07/84 ▸ 12/94	6455R1	**508597**	
1.7 D, 1.7 TD	D	1769	XUD7TE, XUD7		10/84 ▸ 12/94	6455R1	**508597**	
1.9 D	D	1905	XUD9A, XUD9		07/83 ▸ 12/94	6455R1	**508597**	

⏭ **Multi-product Crosslist on section 1** Cross List Multi-produits, Section 1 **Crossliste siehe Kapitel 1** Crosslist Multiproducto en la sección 1
Lista Multi-produto na secção 1 Cross-list Multi prodotto nella sezione 1 **Rubriek 1 : Cross list "alle produkten"** Kombinovaný převodník v sekci 1
Crosslist multi-produse, secţie 1 Çoklu ürün çapraz listesi bölüm 1 τεdir Αντιστοιχίες προϊόντων στο κεφάλαιο 1

Bouteille déshydratante/
Cartouche déshydratante/
Accumulateur
Receiver dryer/
Cartridge dryer/
Accumulator

Trockner/
Trocknerkartusche/
Akkumulator
Filtro Deshidratante/
Cartucho deshidratante/
Acumulador

Filtro seco/
Accumulator
Filtro Disidratatore/
Cartuccia disidratante/
Accumulatore

Valeo

		CC				OE	Valeo	
CITROËN (.../...)								
C2								
1.1 i ▸ 10072	E	1124	TU1JP		09/03 ▸ 06/04	6455CF	**509705**	
1.4 i ▸ 10072	E	1360	TU3JP		09/03 ▸ 06/04	6455CF	**509705**	
1.6 i 16V ▸ 10072	E	1587	TU5JP4		09/03 ▸ 06/04	6455CF	**509705**	
1.4 HDi ▸ 10072	D	1398	DV4TD		09/03 ▸ 06/04	6455CF	**509705**	
C3 (2002>2005)								
1.1 i ▸ 10163	E	1124	TU1JP		04/02 ▸ 09/04	6455CF	**509705**	
1.4 i, 1.4 i 16V ▸ 10163	E	1360	ET3J4, TU3JP		04/02 ▸ 09/04	6455CF	**509705**	
1.6 i 16V ▸ 10163	E	1587	TU5JP4		04/02 ▸ 09/04	6455CF	**509705**	
1.4 HDi 16V ▸ 10163	D	1398	DV4TED4		04/02 ▸ 09/04	6455CF	**509705**	
1.4 HDi ▸ 10163	D	1399	DV4TD		04/02 ▸ 09/04	6455CF	**509705**	
C3 PLURIEL								
1.4 i ▸ 10072	E	1360	TU3JP		05/03 ▸ 06/04	6455CF	**509705**	
1.6 i 16V ▸ 10072	E	1587	TU5JP4		05/03 ▸ 06/04	6455CF	**509705**	
1.4 HDi ▸ 10072	D	1399	DV4TD		02/04 ▸ 06/04	6455CF	**509705**	
C5 (2001>2004)								
1.8 i 16V	E	1749	EW7J4	Kit	02/01 ▸ 08/04	6455AJ	**509525**	
2.0 HPi 16V, 2.0 i 16V	E	1997	EW10J4, EW10D	Kit	02/01 ▸ 08/04	6455AJ	**509525**	
3.0 i V6 24V	E	2946	ES9J4S	Kit	02/01 ▸ 08/04	6455AK	**509524**	
2.0 HDi	D	1997	DW10ATED, DW10TD	Kit	02/01 ▸ 08/04	6455AJ	**509525**	
2.2 HDi 16V	D	2179	DW12TED4	Kit	02/01 ▸ 08/04	6455AJ	**509525**	
C8								
2.0 i 16V	E	1997	EW10J4	Kit	06/02 ▸	6455AJ	**509525**	
2.2 i 16V	E	2230	EW12J4	Kit	06/02 ▸ 09/05	6455AJ	**509525**	
3.0 i V6	E	2946	ES9J4	Kit	06/02 ▸	6455AJ	**509525**	
2.0 HDi 16V	D	1997	DW10ATED4	Kit	06/02 ▸	6455AJ	**509525**	
2.2 HDi 16V	D	2179	DW12TED4	Kit	06/02 ▸ 02/04	6455AJ	**509525**	
EVASION (94>98)								
1.8 i	E	1761	XU7JP		07/96 ▸ 09/98	6455Q7	**508741**	
2.0 i, 2.0 i Turbo CT	E	1998	XU10J2C, XU10J2CTEL3		07/94 ▸ 09/98	6455Q7	**508741**	
1.9 TD	D	1905	XUD9BTF, XUD9TF, XUD9TEF		10/94 ▸ 09/98	6455Q7	**508741**	
2.1 TD	D	2088	XUD11BTE		04/96 ▸ 09/98	6455Q7	**508741**	
EVASION (98>2002)								
1.8 i	E	1761	XU7JP		10/98 ▸ 05/02	6455Q7	**508741**	
2.0 i 16V	E	1997	EW10J4		07/00 ▸ 05/02	6455Q7	**508741**	
2.0 i, 2.0 i 16V, 2.0 i Turbo CT	E	1998	XU10J2C, XU10J2CTEL3 XU10J4R		10/98 ▸ 05/02	6455Q7	**508741**	
1.9 TD	D	1905	XUD9BTF		10/98 ▸ 05/02	6455Q7	**508741**	
2.0 HDi, 2.0 HDi 16V	D	1997	DW10ATED4, DW10ATED		08/99 ▸ 05/02	6455Q7	**508741**	
2.1 TD	D	2088	XUD11BTE		10/98 ▸ 05/02	6455Q7	**508741**	

• **New** Nouveau **Neu** Nuevo **Novo** Nuovo **Nieuw** Nowi **Новый** Novy **Nou** Yeni **Νέους**

		CC				OE	Valeo	

CITROËN (.../...)

SAXO (96>99)

Electrique	L		SA13		01/97 ▸ 08/99	6455X4	**508871**	
1.1 i	E	1124	TU1M+		03/96 ▸ 08/99	6455X4	**508871**	
1.1 i GPL	E	1124	TU1M+		04/97 ▸ 08/99	6455V1	**508870**	
1.4 i	E	1360	TU3JP		03/96 ▸ 08/99	6455X4	**508871**	
1.6 i	E	1587	TU5JP		03/96 ▸ 08/99	6455X4	**508871**	
1.6 i 16V	E	1587	TU5J4		03/96 ▸ 08/99	6455V1	**508870**	
1.5 D	D	1527	TUD5, TUD5B		05/96 ▸ 08/99	6455X4	**508871**	

SAXO (99>)

1.0 i	E	954	TU9M		09/99 ▸	6455Z0	**509689**	
1.1 i, 1.1 i GPL	E	1124	TU1M+, TU1JP		09/99 ▸	6455Z0	**509689**	
1.4 i	E	1360	TU3JP		09/99 ▸	6455Z0	**509689**	
1.6 i, 1.6 i 16V	E	1587	TU5J4, TU5JP		09/99 ▸	6455Z0	**509689**	
1.5 D	D	1527	TUD5B, TUD5		09/99 ▸	6455Z0	**509689**	

SYNERGIE (95>98)

1.8 i	E	1761	XU7JP		07/96 ▸ 09/98	6455Q7	**508741**	
2.0 i	E	1998	XU10J2C		10/95 ▸ 09/98	6455Q7	**508741**	
1.9 TD	D	1905	XUD9BTF, XUD9TEF		10/95 ▸ 09/98	6455Q7	**508741**	

SYNERGIE (98>2002)

2.0 i 16V	E	1997	EW10J4		07/00 ▸ 05/02	6455Q7	**508741**	
2.0 i	E	1998	XU10J2C		10/98 ▸ 05/02	6455Q7	**508741**	
1.9 TD	D	1905	XUD9BTF		10/98 ▸ 05/02	6455Q7	**508741**	
2.0 HDi	D	1997	DW10ATED		08/99 ▸ 05/02	6455Q7	**508741**	

XANTIA (93>97)

1.6 i	E	1580	XU5JP		08/93 ▸ 12/97	6453Y5	**508836**	
1.8 i, 1.8 i 16V	E	1761	XU7JP, XU7JP4, XU7JB		03/93 ▸ 12/97	6453Y5	**508836**	
2.0 i Turbo CT	E	1998	XU10J2CTEL3, XU10J2CTE		07/95 ▸ 12/97	6453V6	**508835**	
2.0 i, 2.0 i 16V	E	1998	XU10J2C, XU10J4R, XU10J4		03/93 ▸ 12/97	6453Y5	**508836**	
3.0 i V6 24V	E	2946	ES9J4		11/96 ▸ 12/97	6453Y5	**508836**	
1.9 D, 1.9 SD, 1.9 TD	D	1905	XUD9BTF, XUD9TEF, XUD9A XUD9SD		06/93 ▸ 12/97	6453Y5	**508836**	
2.1 TD	D	2088	XUD11BTE		07/95 ▸ 12/97	6453V6	**508835**	

XANTIA (97>2002)

2.0 i Turbo CT	E	1998	XU10J2CTEL3		12/97 ▸ 05/02	6453V6	**508835**	
3.0 i V6 24V	E	2946	ES9J4		12/97 ▸ 05/02	6453V6	**508835**	
1.9 SD, 1.9 TD	D	1905	XUD9BTF, XUD9SD		12/97 ▸ 05/02	6453Y5	**508836**	
1.9 SD, 1.9 TD	D	1905	XUD9BTF, XUD9SD		10/99 ▸ 05/02	6453V6	**508835**	
2.0 HDi	D	1997	DW10ATED, DW10TD		10/98 ▸ 05/02	6453V6	**508835**	
2.0 HDi	D	1997	DW10ATED, DW10TD		10/98 ▸ 05/02	6453Y5	**508836**	
2.1 TD	D	2088	XUD11BTE		12/97 ▸ 05/02	6453V6	**508835**	

XM (89>94)

2.0, 2.0 i, 2.0 i Turbo CT	E	1998	XU10J2, XU10J2TE, XU102C XU10M		05/89 ▸ 06/94	6453Z0	**508840**	
3.0 i V6, 3.0 i V6 24V	E	2963	ZPJ, ZPJ4		05/89 ▸ 06/94	6453Z0	**508840**	
2.1 TD Turbo D12 12V	D	2088	XUD11ATE		11/89 ▸ 06/94	6453Z0	**508840**	
2.1 D D12	D	2138	XUD11A		09/89 ▸ 06/94	6453Z0	**508840**	

XM (94>2001)

2.0 i 16V, 2.0 i Turbo CT	E	1998	XU10J2TE, XU10J4R		07/94 ▸ 07/01	6453Z0	**508840**	
3.0 i V6 24V	E	2946	ES9J4		07/97 ▸ 07/01	6453Z0	**508840**	
3.0 i V6, 3.0 i V6 24V	E	2963	ZPJ, ZPJ4		07/94 ▸ 05/99	6453Z0	**508840**	
2.1 TD Turbo D12 12V	D	2088	XUD11ATE, XUD11BTE		07/94 ▸ 07/01	6453Z0	**508840**	

⏭ **Multi-product Crosslist on section 1** Cross List Multi-produits, Section 1 **Crossliste siehe Kapitel 1** Crosslist Multiproducto en la sección 1
Lista Multi-produto na secção 1 Cross-list Multi prodotto nella sezione 1 **Rubriek 1 : Cross list "alle produkten"** Kombinovaný převodník v sekci 1
Crosslist multi-produse, secţie 1 Çoklu ürün çapraz listesi bölüm 1 τεdir Αντιστοιχίες προϊόντων στο κεφάλαιο 1

		cc				OE	Valeo	
CITROËN (.../...)								
XM (94>2001) (.../...)								
2.1 D D12	D	2138	XUD11A		07/94 ▸ 06/96	6453Z0	**508840**	
XSARA (97>2000)								
1.4 i ▸8434	E	1360	TU3JP		07/97 ▸ 12/99	6455Q4	**508837**	
1.4 i 8435 ▸	E	1360	TU3JP		12/99 ▸ 08/00	6455Z4	**509401**	
1.6 i ▸8434	E	1587	TU5JP		07/97 ▸ 12/99	6455Q4	**508837**	
1.6 i 8435 ▸	E	1587	TU5JP		12/99 ▸ 08/00	6455Z4	**509401**	
1.8 i, 1.8 i 16V, 1.8 i GPL 16V ▸8434	E	1761	XU7JB, XU7JP4, XU7JP		07/97 ▸ 12/99	6455Q4	**508837**	
1.8 i, 1.8 i 16V, 1.8 i GPL 16V 8435 ▸	E	1761	XU7JP4, XU7JB, XU7JP		12/99 ▸ 08/00	6455Z4	**509401**	
2.0 i 16V ▸8434	E	1998	XU10J4RS, XU10J4R		01/98 ▸ 12/99	6455Q4	**508837**	
2.0 i 16V 8435 ▸	E	1998	XU10J4R, XU10J4RS		12/99 ▸ 08/00	6455Z4	**509401**	
1.5 D	D	1527	TUD5		03/98 ▸ 08/00	6455X8	**508873**	
1.8 D ▸8434	D	1769	XUD7		03/98 ▸ 12/99	6455Q4	**508837**	
1.9 D ▸8434	D	1868	DW8		09/98 ▸ 12/99	6455Q4	**508837**	
1.9 D	D	1868	DW8		09/98 ▸ 08/00	6455X8	**508873**	
1.9 D, 1.9 SD, 1.9 TD ▸8434	D	1905	XUD9TE, XUD9A, XUD9SD XUD9BSD		07/97 ▸ 12/99	6455Q4	**508837**	
2.0 HDi ▸8434	D	1997	DW10TD		03/99 ▸ 12/99	6455Q4	**508837**	
XSARA (2000>)								
1.4 i	E	1360	TU3JP		09/00 ▸	6455AH	**509791**	
1.6 i 16V	E	1587	TU5JP4		09/00 ▸	6455AH	**509791**	
2.0 i 16V	E	1997	EW10J4		09/00 ▸	6455AH	**509791**	
1.4 HDi	D	1399	DV4TD		01/03 ▸	6455AH	**509791**	
1.9 D	D	1868	DW8B		09/00 ▸	6455AH	**509791**	
2.0 HDi	D	1997	DW10TD, DW10ATED		09/00 ▸	6455AH	**509791**	
XSARA PICASSO								
1.6 i	E	1587	TU5JP		12/99 ▸	6455AH	**509791**	
1.8 i 16V	E	1749	EW7J4		12/99 ▸	6455AH	**509791**	
2.0 i 16V	E	1997	EW10J4		01/03 ▸	6455AH	**509791**	
1.6 HDi	D	1560	DV6TED4		03/04 ▸	6455AH	**509791**	
2.0 HDi	D	1997	DW10TD		12/99 ▸	6455AH	**509791**	
ZX								
1.1, 1.1 i	E	1124	TU1M+, TU1M, TU1		03/91 ▸ 07/98	6455Q4	**508837**	
1.4, 1.4 i	E	1360	TU3MC, TU3JP, TU3.2, TU3M		03/91 ▸ 07/98	6455Q4	**508837**	
1.6 i	E	1580	XU5M2, XU5M, XU5JP		03/91 ▸ 07/98	6455Q4	**508837**	
1.8 i, 1.8 i 16V	E	1761	XU7JP4, XU7JP		09/92 ▸ 07/98	6455Q4	**508837**	
1.9 i	E	1905	XU9JA		03/91 ▸ 08/93	6455Q4	**508837**	
2.0 i, 2.0 i 16V	E	1998	XU10J4RS, XU10J2C, XU10J4		09/92 ▸ 07/98	6455Q4	**508837**	
1.4 D	D	1360	TUD3		07/94 ▸ 07/98	6455Q4	**508837**	
1.5 D	D	1527	TUD5		07/94 ▸ 07/98	6455Q4	**508837**	
1.8 D	D	1769	XUD7		09/92 ▸ 07/98	6455Q4	**508837**	
1.9 D, 1.9 TD	D	1905	XUD9A, XUD9TE, XUD9		07/92 ▸ 07/98	6455Q4	**508837**	

		CC				OE	Valeo	

CITROËN

BERLINGO (96>2002)

1.1 i, 1.1 i GPL ▸8270	E	1124	TU1M+		07/96 ▸ 07/99	6455P8	**508738**	
1.1 i, 1.1 i GPL 8271 ▸	E	1124	TU1M+, TU1JP		07/99 ▸ 12/02	6455X8	**508873**	
1.4, 1.4 i ▸8270	E	1360	TU3JP, TU3.2		07/96 ▸ 07/99	6455P8	**508738**	
1.4, 1.4 i, 1.4 i GPL 8271 ▸	E	1360	TU3JP, TU3.2		07/99 ▸ 12/02	6455X8	**508873**	
1.6 i 16V	E	1587	TU5JP4		12/00 ▸ 12/02	6455X8	**508873**	
1.8 i ▸8270	E	1761	XU7JB		07/97 ▸ 07/99	6455P8	**508738**	
1.8 i 8271 ▸	E	1761	XU7JB		07/99 ▸ 12/02	6455X8	**508873**	
1.8 D ▸8270	D	1769	XUD7		07/96 ▸ 07/99	6455P8	**508738**	
1.8 D 8271 ▸	D	1769	XUD7		07/99 ▸ 12/02	6455X7	**509402**	
1.9 D	D	1868	DW8		07/98 ▸ 07/99	6455P8	**508738**	
1.9 D 8271 ▸	D	1868	DW8		07/99 ▸ 12/02	6455X7	**509402**	
1.9 D ▸8270	D	1905	XUD9A		07/96 ▸ 07/99	6455P8	**508738**	
1.9 D 8271 ▸	D	1905	XUD9A		07/99 ▸ 12/02	6455X7	**509402**	
2.0 HDi	D	1997	DW10TD		10/99 ▸ 12/02	6455X7	**509402**	

BERLINGO (2002>)

1.1 i	E	1124	TU1JP		12/02 ▸	6455AH	**509791**	
1.4 i, 1.4 i GPL	E	1360	TU3JP		12/02 ▸	6455AH	**509791**	
1.6 i 16V	E	1587	TU5JP4		12/02 ▸	6455AH	**509791**	
1.9 D	D	1868	DW8B		12/02 ▸	6455AH	**509791**	
1.6 HDi	D	1560	DV6ATED4, DV6BTED4		07/05 ▸	6455AH	**509791**	
2.0 HDi	D	1997	DW10TD		12/02 ▸	6455AH	**509791**	

DISPATCH (2004>)

1.9 D	D	1868	DW8B		01/04 ▸	6455AH	**509791**	
2.0 HDi	D	1997	DW10BTED+L4, DW10BTED		01/04 ▸	6455AH	**509791**	

JUMPER (94>2001)

2.0, 2.0 i	E	1998	XU10J2U, XU102CU		02/94 ▸ 12/01	6455AE	**509795**	
1.9 D, 1.9 TD	D	1905	XUD9UTF, XUD9A, XUD9AU XUD9TEF		02/94 ▸ 12/01	6455AE	**509795**	
2.0 HDi	D	1997	DW10TD		09/01 ▸ 12/01	6455AE	**509795**	
2.5 D, 2.5 TD, 2.5 TDi	D	2446	DJ5, DJ5TED, DJ5T		02/94 ▸ 12/01	6455AE	**509795**	
2.8 D, 2.8 HDi, 2.8 TD	D	2798	8140-43S, 8140-43, 8140-63		06/99 ▸ 12/01	6455AE	**509795**	

JUMPER (2002>)

2.0 i	E	1998	XU10J2U		01/02 ▸	6455AE	**509795**	
2.0 HDi	D	1997	DW10UTD		01/02 ▸	6455AE	**509795**	
2.2 HDi	D	2179	DW12TED		01/02 ▸	6455AE	**509795**	
2.8 HDi	D	2798	F28TDCR		01/02 ▸	6455AE	**509795**	

JUMPY

1.6 i	E	1581	160A		09/95 ▸ 12/03	6455Q7	**508741**	
2.0 i 16V	E	1997	EW10J4		09/00 ▸ 12/03	6455Q7	**508741**	
1.9 D	D	1868	DW8B, DW8		05/98 ▸ 12/03	6455Q7	**508741**	
1.9 D, 1.9 TD	D	1905	XUD9BTF, XUD9TF, XUD9A		09/95 ▸ 12/03	6455Q7	**508741**	

		cc				OE	Valeo	
CITROËN (.../...)								
JUMPY (.../...)								
2.0 HDi, 2.0 HDi 16V	D	1997	DW10CTED, DW10BTED DW10ATED, DW10ATED4		09/00 ▸ 12/03	6455Q7	**508741**	
JUMPY II								
2.0 i 16V	E	1997	EW10J4		01/04 ▸	6455Q7	**508741**	
1.9 D	D	1868	DW8B		01/04 ▸	6455Q7	**508741**	
2.0 HDi	D	1997	DW10ATED4, DW10BTED DW10BTED+L4		01/04 ▸	6455Q7	**508741**	
RELAY (94>2001)								
2.0 i	E	1998	XU10J2U		02/94 ▸ 12/01	6455AE	**509795**	
1.9 D, 1.9 TD	D	1905	XUD9AU, XUD9UTF, XUD9A		02/94 ▸ 12/01	6455AE	**509795**	
2.0 HDi	D	1997	DW10TD		09/01 ▸ 12/01	6455AE	**509795**	
2.5 D, 2.5 TD, 2.5 TDi	D	2446	DJ5TED, DJ5T, DJ5		02/94 ▸ 12/01	6455AE	**509795**	
2.8 HDi	D	2798	8140-43S		09/00 ▸ 12/01	6455AE	**509795**	
DACIA								
LOGAN								
1.4 MPI	E	1390	K7J.7.10		09/04 ▸	7700836314	**509404**	
1.6 MPI, 1.6 i 16V, 1.6 i 90	E	1598	K4M.6.90, K4M.6.94 K7M.7.10, K7M.7.14		09/04 ▸	7700836314	**509404**	
1.5 dCi	D	1461	K9K.7.96, K9K.7.92 K9K.7.90, K9K.7.94		09/05 ▸	6001548601	**509938**	
SANDERO								
1.4 MPI	E	1390	K7J.7.10		06/08 ▸	7700836314	**509404**	
1.5 dCi	D	1461	K9K.7.92, K9K.7.96		09/08 ▸	7700836314	**509404**	
1.6 MPI 90	E	1598	K7M.7.10, K7M.7.14		06/08 ▸	7700836314	**509404**	
DAEWOO								
LANOS								
1.4	E	1349	A14SMS		05/97 ▸	96160606	**509890**	
1.5	E	1498	A15SMS		05/97 ▸	96160606	**509890**	
1.6 16V	E	1598	A16DMS		05/97 ▸	96160606	**509890**	
MATIZ								
0.8 i	E	796	F8CV		03/98 ▸	96512886	**509922**	
1.0 i	E	995	B10S		01/02 ▸	96512886	**509922**	
DAF								
95 FAT								
95.360	D	11600	WS 268/G/L/M		08/90 ▸ 01/98	1290592	**815963**	
95.380	D	11600	WS 282		09/87 ▸ 09/90	1290592	**815963**	
95.400	D	11600	WS 295/G/L/M		08/90 ▸ 01/98	1290592	**815963**	
95.430	D	11600	WS 315/L/M		02/92 ▸ 01/98	1290592	**815963**	
95 XF								
380	D	12580	XF 280M/XE280C		01/97 ▸ 09/02	1321891	**815964**	
430	D	12580	XF315M/XE315C		01/97 ▸ 09/02	1321891	**815964**	
480	D	12580	XF355M/XE355C		01/97 ▸ 09/02	1321891	**815964**	
530	D	14000	VF390M/XE390C		01/97 ▸ 09/02	1321891	**815964**	

		CC				OE	Valeo	
								FIAT
ALBEA								
1.3 JTD	D	1248	188A9.000		09/03 ▸	7742746	**508805**	
BARCHETTA								
1.8 i 16V	E	1747	188A6.000, 183A1.000		05/95 ▸	46527180	**508805**	
BRAVA								
1.2 i 16V	E	1242	182B2.000, 188A5.000		10/98 ▸	46527180	**508805**	
1.4 i, 1.4 i 12V	E	1372	182A3.000, 182A5.000		06/95 ▸ 09/98	46527180	**508805**	
1.6 i, 1.6 i 16V	E	1581	182A4/A6.000, 182A4.027		06/95 ▸	46527180	**508805**	
1.6 i 16V	E	1596	182B6.000		10/98 ▸	46527180	**508805**	
1.8 i, 1.8 i 16V	E	1747	182A2.000		06/95 ▸	46527180	**508805**	
1.9 TD	D	1910	182A8.000, 182A7.000		03/96 ▸ 09/98	46527180	**508805**	
1.9 D	D	1929	160A7.000		06/95 ▸ 09/98	46527180	**508805**	
BRAVO								
1.2 i 16V	E	1242	182B2.000, 188A5.000		10/98 ▸	46527180	**508805**	
1.4 i	E	1372	182A5.000, 182A3.000		06/95 ▸ 09/98	46527180	**508805**	
1.6 i 16V	E	1581	182A6.000, 182A4.000		06/95 ▸	46527180	**508805**	
1.6 i 16V	E	1596	182B6.000		10/98 ▸	46527180	**508805**	
1.8 i 16V	E	1747	182A2.000		06/95 ▸	46527180	**508805**	
2.0 i 20V	E	1998	182B7.000, 182A1.000		06/95 ▸	46527180	**508805**	
1.9 JTD, 1.9 TD	D	1910	182A7/A8.000, 182B4/9.000		03/96 ▸	46527180	**508805**	
1.9 D	D	1929	160A7.000		06/95 ▸ 09/98	46527180	**508805**	
COUPE								
2.0 i 16V	E	1995	836A3.011, 836A3.000		11/93 ▸ 09/96	82478872	**508628**	
2.0 i Turbo 16V	E	1995	175A1.000		11/93 ▸ 09/96	82478871	**508630**	
2.0 i 20V	E	1998	182A1.000, 182B3.000		07/96 ▸	82478872	**508628**	
IDEA								
1.2 i 16V	E	1242	188A5.000	Type Magneti Marelli	02/04 ▸	46811665	**509592**	
1.4 i 16V	E	1368	192B2.000, 843A1.000	Type Magneti Marelli	10/03 ▸	46811665	**509592**	
1.3 JTD Multijet 16V	D	1248	188A9.000	Type Magneti Marelli	10/03 ▸	46811665	**509592**	
MAREA								
1.2 i 16V	E	1242	182B2.000		02/99 ▸	46527180	**508805**	
1.4 i 12V	E	1372	182A3.000		07/96 ▸ 01/99	46527180	**508805**	
1.6 i 16V, 1.6 i Bipower 16V	E	1581	185A3.000, 182A4.000 182B5.098		07/96 ▸	46527180	**508805**	
1.6 i 16V	E	1596	182B6.000		02/99 ▸	46527180	**508805**	
1.8 i 16V	E	1747	182A2.000		07/96 ▸	46527180	**508805**	
2.0 i 20V	E	1998	182A1.000, 182B7.000 185A8.000		07/96 ▸	46527180	**508805**	
1.9 JTD, 1.9 TD	D	1910	182A7/8.000, 182B4/9.000 186A6.000		07/96 ▸	46527180	**508805**	
2.4 JTD, 2.4 TD	D	2387	185A2.000, 185A6.000		07/96 ▸	46527180	**508805**	
MARENGO (159) (89>95)								
1.9 D, 1.9 TD, 1.9 TDs	D	1929	160A6.000, 160A7.000		11/89 ▸ 01/95	82478872	**508628**	
MARENGO (185) (95>)								
1.9 JTD, 1.9 TD	D	1910	182A8.000, 182A7.000 182B4.000		01/95 ▸	46527180	**508805**	
MULTIPLA (98>2003)								
1.6 i 16V, 1.6 i Bipower 16V **1.6 i Blupower 16V**	E	1581	182A4.000, 186A4.000 186A3.000		11/98 ▸ 05/01	46521840	**508805**	

		cc				OE	Valeo	
FIAT (.../...)								
MULTIPLA (98>2003) (.../...)								
1.6 i 16V, 1.6 i Bipower 16V **1.6 i Blupower 16V**	E	1581	182A4.000, 186A3.000 186A4.000		05/01 ▸	46804655	**509606**	
1.6 i 16V, 1.6 i Bipower 16V	E	1596	182B6.000		11/98 ▸ 05/01	46521840	**508805**	
1.6 i 16V, 1.6 i Bipower 16V	E	1596	182B6.000		05/01 ▸	46804655	**509606**	
1.9 JTD	D	1910	186A6.000, 182B4.000		11/98 ▸ 05/01	46521840	**508805**	
1.9 JTD	D	1910	182B4.000, 186A8.000 186A6.000		05/01 ▸	46804655	**509606**	
MULTIPLA (2004>)								
1.6 i 16V, 1.6 i Bi Power 16V	E	1596	182B6.000		07/04 ▸	46804655	**509606**	
1.9 JTD	D	1910	186A8.000		07/04 ▸	46804655	**509606**	
PALIO								
1.7 D, 1.7 TD	D	1697	176B7.000, 176A3.000 176B3.000		09/97 ▸ 02/01	46527180	**508805**	
PUNTO (93>99)								
1.1 i	E	1108	176B2.000, 176A6.000		07/93 ▸ 09/99	46527180	**508805**	
1.2 i 16V	E	1242	176A7/8.000, 176B4/9.000 176B1.000		07/93 ▸ 09/99	46527180	**508805**	
1.6 i 16V	E	1581	176A9.000		11/93 ▸ 04/97	46527180	**508805**	
1.7 D, 1.7 TD	D	1697	176A3/5.000, 176B3/7.000 176A3.000F		07/93 ▸ 09/99	7742746	**508805**	
PUNTO II (99>2003)								
1.2 i, 1.2 i 16V	E	1242	188A4.000, 188A5.000		07/99 ▸ 11/01	46802605	**508291**	
1.2 i, 1.2 i 16V	E	1242	188A4.000, 188A5.000	Type Magneti Marelli	10/02 ▸ 06/03	46811665	**509592**	
1.2 i, 1.2 i 16V	E	1242	188A5.000, 188A4.000	Type Magneti Marelli	07/99 ▸ 06/03	46745058	**509589**	
1.8 i 16V	E	1747	183A1.000	Type Valeo	07/99 ▸ 06/03	46481438	**509714**	
1.8 i 16V	E	1747	188A6.000, 183A1.000	Type Magneti Marelli	10/02 ▸ 06/03	46811665	**509592**	
1.9 D, 1.9 JTD	D	1910	188A2.000, 188A7.000 188A3.000	Type Valeo	07/99 ▸ 06/03	46481438	**509714**	
PUNTO II (2003>2005)								
1.2 i, 1.2 i 16V, 1.2 i Bipower	E	1242	188A5.000, 188A4.000	Type Magneti Marelli	07/03 ▸	46811665	**509592**	
1.4 i 16V	E	1368	843A1.000	Type Magneti Marelli	07/03 ▸	46811665	**509592**	
1.8 i 16V	E	1747	188A6.000	Type Valeo	07/03 ▸	46481438	**509714**	
1.3 JTD 16V	D	1248	188A9.000	Type Magneti Marelli	07/03 ▸	46811665	**509592**	
1.9 JTD	D	1910	188A7.000	Type Valeo	07/03 ▸	46481438	**509714**	
SEICENTO								
1.1 i	E	1108	187A1.000, 176B2.000		03/98 ▸	46527180	**508805**	
SIENA (97>2001)								
1.7 D, 1.7 TD	D	1697	176B7.000, 176B3.000 178C9.066		09/98 ▸ 12/01	46527180	**508805**	
SIENA (2002>)								
1.2 i 16V	E	1242	178D7055		01/02 ▸	7742746	**508805**	
1.5 i	E	1461	178E5.022		01/02 ▸	7742746	**508805**	
STILO (2001>2004)								
1.2 i 16V	E	1242	188A5.000		09/01 ▸ 12/03	46811665	**509592**	
1.6 i 16V	E	1596	182B6.000		09/01 ▸ 12/03	46811665	**509592**	
1.8 i 16V	E	1747	192A4.000		09/01 ▸ 12/03	46811665	**509592**	
2.4 i 20V	E	2446	192A2.000		09/01 ▸ 12/03	46811665	**509592**	
1.9 JTD	D	1910	192A1.000, 192A3.000		09/01 ▸ 12/03	46811665	**509592**	

		CC				OE	Valeo	
FIAT (.../...)								
STILO (2004>)								
1.4 16V, 1.4 i 16V	E	1368	843A1.000		01/04 ▸	46811665	**509592**	
1.6 16V, 1.6 i 16V	E	1596	182B6.000, 192B3.000 178E7.000		01/04 ▸	46811665	**509592**	
1.8 16V, 1.8 i 16V	E	1747	192A4.000		01/04 ▸	46811665	**509592**	
2.4 i 20V	E	2446	192A2.000		01/04 ▸	46811665	**509592**	
1.9 JTD, 1.9 JTD 16V **1.9 JTD Multijet/16V**	D	1910	937A4.000, 192A3.000 192A1.000, 192A5.000		01/04 ▸	46811665	**509592**	
TEMPRA								
1.4, 1.4 ie	E	1372	159A2.000, 836A4.000 160A1.046		11/89 ▸ 06/96	82478872	**508628**	
1.6, 1.6 ie	E	1581	159A3.048, 159A3.046 159A3.000, 159B9.000		11/89 ▸ 06/96	82478872	**508628**	
1.8 ie, 1.8 ie 16V	E	1756	835C2/4.000, 159A4.000 159A4.046, 836A5.000		11/89 ▸ 06/96	82478872	**508628**	
2.0 ie	E	1995	159A6.046		11/89 ▸ 02/93	82478872	**508628**	
2.0 ie	E	1995	159A6.046		03/92 ▸ 06/96	82478871	**508630**	
1.9 D, 1.9 TD, 1.9 TDs	D	1929	160A6/7.000, 160D1.000 160A/B6.046		11/89 ▸ 06/96	82478872	**508628**	
TIPO								
1.1	E	1108	160A3.000		01/88 ▸ 02/93	82478872	**508628**	
1.4, 1.4 ie	E	1372	836A4.000, 160A1.046 160A1.000, 159A2.000		01/88 ▸ 10/95	82478872	**508628**	
1.6, 1.6 ie	E	1581	160A2.000, 835C1.000 159A3.000, 159A3.048		01/88 ▸ 06/95	82478872	**508628**	
1.8 ie, 1.8 ie 16V	E	1756	835C2.000, 836A5.000 159A4.000, 160A5.000		04/89 ▸ 10/95	82478872	**508628**	
2.0 ie, 2.0 ie 16V	E	1995	154E1.000, 159A5.046 160A8.046, 159A6.046		06/90 ▸ 06/95	82478872	**508628**	
1.7 D	D	1697	149B4.000		01/88 ▸ 06/95	82478872	**508628**	
1.9 D, 1.9 TD, 1.9 TDs	D	1929	160B6.046, 160A6/7.000 160D1.000, 160A6.046		01/88 ▸ 06/95	82478872	**508628**	
ULYSSE (94>98)								
1.8 ie	E	1761	LFW		03/96 ▸ 09/98	9617682080	**508741**	
2.0 ie, 2.0 ie Turbo	E	1998	RFU, RGX		06/94 ▸ 09/98	9617682080	**508741**	
1.9 TD	D	1905	XUD9TEF/K, XUD9TEF/L3 XUD9TEF/Y		06/94 ▸ 09/98	9617682080	**508741**	
2.1 TD	D	2088	P8C		03/96 ▸ 09/98	9617682080	**508741**	
ULYSSE (98>2002)								
1.8 ie	E	1761	LFW		10/98 ▸ 08/02	9617682080	**508741**	
2.0 ie 16V	E	1997	EW10J4/L4		10/98 ▸ 08/02	9617682080	**508741**	
2.0 ie, 2.0 ie 16V, 2.0 ie Turbo	E	1998	RGX, RFV, RFU		10/98 ▸ 08/02	9617682080	**508741**	
1.9 TD	D	1905	XUD9TEF/L3, XUD9TEF/K		10/98 ▸ 08/02	9617682080	**508741**	
2.0 JTD, 2.0 JTD 16V	D	1997	RHZ, DW10ATED4		10/99 ▸ 08/02	9617682080	**508741**	
2.1 TD	D	2088	P8C		10/98 ▸ 08/02	9617682080	**508741**	
ULYSSE (2002>)								
2.0 i 16V	E	1997	EW10J4	Kit	09/02 ▸	1488334080	**509525**	
3.0 i V6	E	2946	ES9J4S	Kit	09/02 ▸	1488334080	**509525**	
2.0 JTD 16V	D	1997	DW10ATED4	Kit	09/02 ▸	1488334080	**509525**	
2.2 JTD 16V	D	2179	DW12ATED4	Kit	09/02 ▸	1488334080	**509525**	

⏭ **Multi-product Crosslist on section 1** Cross List Multi-produits, Section 1 **Crossliste siehe Kapitel 1** Crosslist Multiproducto en la sección 1
Lista Multi-produto na secção 1 Cross-list Multi prodotto nella sezione 1 **Rubriek 1 : Cross list "alle produkten"** Kombinovaný převodník v sekci 1
Crosslist multi-produse, secţie 1 Çoklu ürün çapraz listesi bölüm 1 τεdir Αντιστοιχίες προϊόντων στο κεφάλαιο 1

		cc				OE	Valeo	
FIAT								
DOBLO (2000>2004)								
1.2 i	E	1242	223A5.000		10/00 ▸ 12/03	46527180	**508805**	
1.6 i 16V	E	1596	182B6.000		10/01 ▸ 12/03	46527180	**508805**	
1.9 DS, 1.9 JTD	D	1910	223A6.000, 182B9.000		10/00 ▸ 12/03	46521840	**508805**	
DOBLO (2004>)								
1.2 i	E	1242	223A5.000		01/04 ▸	46527180	**508805**	
1.6 GNV 16V	E	1596	182B6.000		01/04 ▸	46527180	**508805**	
1.3 MTJ	D	1248	188A9.000		01/04 ▸	46527180	**508805**	
1.9 DS, 1.9 JTD	D	1910	182B9.000, 223A6.000		01/04 ▸	46527180	**508805**	
DOBLO CARGO (2000>2003)								
1.2 i	E	1242	223A5.000		10/00 ▸ 12/03	46527180	**508805**	
1.6 i 16V	E	1596	182B6.000		10/01 ▸ 12/03	46527180	**508805**	
1.9 DS, 1.9 JTD	D	1910	223A6.000, 182B9.000		10/00 ▸ 12/03	46521840	**508805**	
DOBLO CARGO (2004>)								
1.2 i	E	1242	223A5.000		01/04 ▸	46527180	**508805**	
1.9 DS, 1.9 JTD	D	1910	223A7.000, 223A6.000		01/04 ▸	46527180	**508805**	
DUCATO (94>2001)								
2.0, 2.0 i	E	1998	XU10J2U/W2, XU102CU/W2		02/94 ▸ 12/01	46527180	**508805**	
1.9 D, 1.9 TD	D	1905	XUD9A/K, XUD9TEF/W3		06/98 ▸ 12/01	46527180	**508805**	
1.9 D, 1.9 TD	D	1929	230A3.000, 230A2.000 230A4.000		02/94 ▸ 12/01	46527180	**508805**	
2.5 D, 2.5 TDi	D	2499	8140-47R, 8140-67, 8140-47		02/94 ▸ 12/01	46527180	**508805**	
2.5 TDi, 2.8 D, 2.8 JTD, 2.8 TDi	D	2798	8140-43S, 8140-63, 8140-43		01/98 ▸	46527180	**508805**	
DUCATO (2002>)								
2.0 i	E	1998	RFL		01/02 ▸	46527180	**508805**	
2.0 JTD	D	1997	RHV		01/02 ▸	46527180	**508805**	
2.3 JTD	D	2286	FIAE0481C		01/02 ▸	46527180	**508805**	
2.8 JTD, 2.8 TD	D	2798	8140-43, 8140-43S		01/02 ▸	46527180	**508805**	
SCUDO (95>2003)								
1.6 i	E	1581	220A2.000		07/95 ▸ 12/03	9617682080	**508741**	
2.0 i 16V	E	1997	EW10J4/L4		09/00 ▸ 12/03	9617682080	**508741**	
1.9 D	D	1868	DW8/W3, DW8B/L4		07/96 ▸ 12/03	9617682080	**508741**	
1.9 D, 1.9 TD	D	1905	XUD9TEF/L3, XUD9TEF/K XUD9A/K, XUD9TEF/W3		07/95 ▸ 12/03	9617682080	**508741**	
2.0 JTD, 2.0 JTD 16V	D	1997	RHX, RHZ, DW10ATED4		02/00 ▸ 12/03	9617682080	**508741**	
SCUDO (2004>)								
2.0 16V	E	1997	EW10J4/L4		01/04 ▸	9617682080	**508741**	
1.9 D	D	1868	DW8B/L4		01/04 ▸	9617682080	**508741**	
2.0 JTD, 2.0 JTD 16V	D	1997	DW10ATED4, DW10BTED+L4 DW10BTED/L4		01/04 ▸	9617682080	**508741**	
STRADA PICK UP								
1.7 D, 1.7 TD	D	1697	176A3.000F, 176A3.000		03/99 ▸ 03/03	46527180	**508805**	
FORD								
COUGAR								
2.0 i	E	1998	EDB		09/98 ▸ 02/01	1124229	**509695**	
2.5 i V6	E	2544	LCBA		09/98 ▸ 06/00	1124229	**509695**	

		CC				OE	Valeo	
							FORD (.../...)	
FIESTA (89>95)								
1.0	E	999	TLB		04/89 ▸ 06/91	7067762	**508736**	
1.1, 1.1 i	E	1118	GUE, G6A		02/89 ▸ 07/95	7067762	**508736**	
1.3, 1.3 i	E	1299	J6B, JBC		02/89 ▸ 07/95	7107568	**508736**	
1.4, 1.4 i	E	1392	FUF, F6E		02/89 ▸ 01/94	7067762	**508736**	
1.6, 1.6 i, 1.6 i 16V **1.6 i Turbo**	E	1597	L1G, LNA, LUH, LJC, LJD		02/89 ▸ 07/95	7067762	**508736**	
1.8 i 16V	E	1796	RDB, RDA		02/92 ▸ 01/94	7107568	**508736**	
1.8 i 16V	E	1796	RDB, RDA		03/94 ▸ 07/95	7232889	**508879**	
1.8 D, 1.8 TD	D	1753	RTD, RTC, RFE		02/89 ▸ 07/95	7067762	**508736**	
FIESTA (95>99)								
1.0 i	E	999	C4, TD		05/96 ▸ 08/99	1121178	**509706**	
1.1 i	E	1118	G6A		08/95 ▸ 09/96	1121178	**509706**	
1.2 i 16V	E	1242	DHA		08/95 ▸ 09/99	1121178	**509706**	
1.3 i	E	1299	JJA, J4C		08/95 ▸ 08/99	1121178	**509706**	
1.4 i 16V	E	1388	FHA		01/96 ▸ 08/99	1121178	**509706**	
1.8 D	D	1753	RTJ, RTK		08/95 ▸ 08/99	1121178	**509706**	
FIESTA (99>2002)								
1.2 i 16V	E	1242	DHB, DHC, DHD		08/99 ▸ 03/02	1121178	**509706**	
1.3 i	E	1299	J4L, JJC, J4J, JJE		08/99 ▸ 03/02	1121178	**509706**	
1.4 i 16V	E	1388	FHE, FHA		08/99 ▸ 03/02	1121178	**509706**	
1.6 i	E	1596	ZL16, L1T		10/99 ▸ 03/02	1121178	**509706**	
1.8 D, 1.8 TDdi	D	1753	DI-TD, RTJ		09/99 ▸ 03/02	1121178	**509706**	
FIESTA (2002>)								
1.25 16V	E	1242	FUJA, FUJB, M7JA, M7JB	- PSS	05/02 ▸	1148935	**509934**	
1.3 i	E	1299	A9JA, BAJA	- PSS	03/02 ▸	1148792	**509934**	
1.4 i 16V	E	1388	FXJA	- PSS	03/02 ▸	1148792	**509934**	
1.6 i 16V	E	1596	FYJA	- PSS	03/02 ▸	1148935	**509934**	
2.0 i 16V ST150	E	1999	N4JB	- PSS	03/05 ▸	1148935	**509934**	
1.4 TDCi	D	1399	F6JA	- PSS	03/02 ▸	1148935	**509934**	
1.6 TDCi	D	1560	HHJA, HHJB	- PSS	11/04 ▸	1148935	**509934**	
FOCUS (98>2001)								
1.4 i	E	1388	FXDA, FXDC		10/98 ▸ 06/99	1062340	**509502**	
1.6 i	E	1596	FYDA, FYDC		10/98 ▸ 06/99	1062340	**509502**	
1.8 i	E	1796	EYDA, EYDC		10/98 ▸ 06/99	1062340	**509502**	
2.0 i	E	1988	EDDC, EDDA		10/98 ▸ 06/99	1062340	**509502**	
1.8 TDi	D	1753	C9DC, C9D		10/98 ▸ 06/99	1062340	**509502**	
FOCUS (2004>)								
1.6 i	E	1596	16LSEZ		09/04 ▸	1062340	**509502**	
1.8 i CNG 16V **1.8 i Flexifuel 16V**	F	1798	Q7DA, DURA18CNG		11/04 ▸	1354643	**509919**	
2.5 i 20V	E	2521	2.5 DURATEC		10/05 ▸	1354643	**509919**	
FOCUS C-MAX (03>07)								
1.6 Ti-VCT 16V, 1.6 i 16V	E	1596	HXDA, HWDA/B		10/03 ▸	1223457	**509919**	
1.8 i 16V	E	1798	CSDA		10/03 ▸	1354643	**509919**	
1.6 TDCi 16V	D	1560	HHDA/B		10/03 ▸	1223457	**509919**	
FUSION								
1.25 16V	E	1242	FUJA, FUJB	- PSS	08/04 ▸	1148935	**509934**	
1.4 i 16V	E	1388	FXJA	- PSS	06/02 ▸	1148935	**509934**	
1.6 i 16V	E	1596	FYJA	- PSS	06/02 ▸	1148935	**509934**	
1.4 TDCi	D	1399	F6JA	- PSS	06/02 ▸	1148935	**509934**	

⏭ **Multi-product Crosslist on section 1** Cross List Multi-produits, Section 1 **Crossliste siehe Kapitel 1** Crosslist Multiproducto en la sección 1
Lista Multi-produto na secção 1 Cross-list Multi prodotto nella sezione 1 **Rubriek 1 : Cross list "alle produkten"** Kombinovaný převodník v sekci 1
Crosslist multi-produse, secţie 1 Çoklu ürün çapraz listesi bölüm 1 τεdir Αντιστοιχίες προϊόντων στο κεφάλαιο 1

		cc				OE	Valeo	
FORD (.../...)								
FUSION (.../...)								
1.6 TDCi	D	1560	HHJA, HHJB	- PSS	11/04 ▸	1148935	**509934**	
GALAXY (95>2000)								
2.0 i	E	1998	NSE		05/95 ▸ 03/00	7230473	**508807**	
2.3 i, 2.3 i 16V	E	2295	Y5		01/97 ▸ 03/00	7230473	**508807**	
2.8 i VR6	E	2792	PW		05/95 ▸ 03/00	7230473	**508807**	
1.9 TDi	D	1896	MG, MF		11/95 ▸ 03/00	7230473	**508807**	
GALAXY (2000>)								
2.0 i	E	1998	NSE		01/01 ▸ 05/03	1151378	**509593**	
2.3 i	E	2295	Y5, Y5B		04/00 ▸ 05/03	1151378	**509593**	
2.8 i V6	E	2792	PW-204		04/00 ▸ 05/03	1151378	**509593**	
1.9 TDi	D	1896	MF, AUY1, ASZ1		04/00 ▸ 05/03	1151378	**509593**	
KA								
1.0 i	E	999	C4, TD		10/96 ▸	1152392	**509503**	
1.3 i	E	1299	J4D/K/M, JJB/D/F, A9JA DURA13		09/96 ▸	1152392	**509503**	
1.6 i	E	1599	BL16EFI		02/03 ▸	1152392	**509503**	
MONDEO (93>96)								
1.6 i	E	1597	L1F		01/93 ▸ 08/96	3743793	**508888**	
1.8 i	E	1796	RKA		01/93 ▸ 08/96	3743793	**508888**	
2.0 i	E	1998	NGA		01/93 ▸ 08/96	3743793	**508888**	
2.5 i V6 24V	E	2544	SEA		07/94 ▸ 08/96	3743793	**509695**	
1.8 TD	D	1753	RFN		09/93 ▸ 08/96	3743793	**509695**	
MONDEO (96>2000)								
1.6 i	E	1597	L1J-90, L1		08/96 ▸ 08/00	1118717	**508888**	
1.8 i	E	1796	RKJ		08/96 ▸ 08/00	1118717	**508888**	
2.0 i	E	1998	NGA		08/96 ▸ 08/00	1118717	**508888**	
2.5 i V6	E	2544	SE, SEA		08/96 ▸ 08/00	1118718	**509695**	
1.8 TD	D	1753	RFN		08/96 ▸ 08/00	1118718	**509695**	
MONDEO (2000>2002)								
1.8 i 16V	E	1798	CHBB, CHBA, CGBA, CGBB	+ HOSE	10/00 ▸ 09/01	1138446	**509696**	
2.0 i 16V	E	1999	CJBA, CJBB	+ HOSE	10/00 ▸ 09/01	1138446	**509696**	
2.0 i 16V	E	1998	CJBA, CJBB	+ HOSE	09/01 ▸ 09/02	1197811	**509696**	
2.5 i V6 24V	E	2495	LCBD	+ HOSE	10/00 ▸ 09/01	1138446	**509696**	
2.5 i V6 24V	E	2495	LCBD	+ HOSE	09/01 ▸ 09/02	1197811	**509696**	
3.0 i V6 24V	E	2967	MP30 (ST220)	+ HOSE	03/02 ▸ 09/02	1197811	**509696**	
2.0 DI 16V, 2.0 TDCi 16V 2.0 TDDI 16V	D	1998	D6BA, D5BA	+ HOSE	10/00 ▸ 09/01	1121714	**509696**	
2.0 DI 16V, 2.0 TDCi 16V 2.0 TDDI 16V	D	1998	D6BA, D5BA, PD	+ HOSE	09/01 ▸ 09/02	1197811	**509696**	
PUMA								
1.4 i 16V	E	1388	FHD, FHF		01/98 ▸ 10/00	1095826	**509706**	
1.6 i 16V	E	1596	ZH16S		09/00 ▸ 12/01	1095826	**509706**	
1.7 i 16V	E	1679	MHA		05/97 ▸ 12/01	1095826	**509706**	
FORD								
COURRIER (91>96)								
1.3 i	E	1299	J6B		01/94 ▸ 09/96	7107568	**508736**	
TRANSIT (95>99)								
2.0 i	E	1998	NSF		09/94 ▸ 12/99	1002142	**509941**	

• **New** Nouveau **Neu** Nuevo **Novo** Nuovo **Nieuw** Nowi **Новый** Nowy **Nou** Yeni **Νέους**

		CC				OE	Valeo	
FORD (.../...)								
TRANSIT (95>99) (.../...)								
2.5 D, 2.5 TD	D	2496	4GC, 4HB, 4FC, 4FB, 4GB		09/94 ▸ 12/99	1002142	**509941**	
FORD USA								
PROBE								
2.0 i 16V	E	1991	FS		10/93 ▸ 12/97	3898063	**508889**	
2.5 i V6 24V	E	2497	99B		10/93 ▸ 12/97	3898063	**508889**	
HONDA								
ACCORD IV (89>93)								
1.8	E	1849	F18A2		09/89 ▸ 06/93	80351SM4003	**508936**	
2.0, 2.0 i 16V	E	1997	F20A5, F20A2, F20A4, F20A3 F20A8		09/89 ▸ 06/93	80351SM4003	**508936**	
2.2 i 16V	E	2156	F22A3		09/89 ▸ 06/93	80351SM4003	**508936**	
CIVIC IV (91>95)								
1.3	E	1343	D13B2		09/91 ▸ 09/95	80351ST7003	**508934**	
1.5 i	E	1493	D15B2, D15Z1		09/91 ▸ 09/95	80351ST7003	**508934**	
1.6 i	E	1590	D16Z6, D16Z7, D16A7		09/91 ▸ 09/95	80351ST7003	**508934**	
1.6 i	E	1595	B16A2		09/91 ▸ 09/95	80351ST7003	**508934**	
CIVIC V (EJ/EK) (95>2001)								
1.6 i	E	1595	B16A-155, B16A-185		04/99 ▸ 03/01	80351S04003	**508935**	
CR-V (97>2002)								
2.0 i	E	1973	B20B, B20B3		01/97 ▸ 02/02	80351S04003	**508935**	
CRX (EE/ED) (87>92)								
1.4	E	1396	D14A1		09/89 ▸ 02/92	80351ST7003	**508934**	
1.5 i	E	1493	D15B1		09/87 ▸ 07/88	80351ST7003	**508934**	
1.6 i, 1.6 i 16V	E	1590	D16A6/7/8/9, D16Z5		09/87 ▸ 02/92	80351ST7003	**508934**	
1.6 i 16V	E	1595	B16A1		08/89 ▸ 02/92	80351ST7003	**508934**	
CRX (EG/EH) (92>)								
1.6 i	E	1590	D16Z7, D16Z6, D16Y8		03/92 ▸	80351ST7003	**508934**	
1.6 i	E	1595	B16A2		03/92 ▸	80351ST7003	**508934**	
INTEGRA III (97>)								
1.8 i 16V	E	1797	B18C6		11/97 ▸ 08/01	80351ST7003	**508934**	
LEGEND (85>90)								
2.7	E	2675	C27A2, C27A1		07/87 ▸ 09/90	80340SD4013	**508936**	
LEGEND (90>96)								
3.2 i 24V	E	3206	C32A2		10/90 ▸ 02/96	80340SD4013	**508936**	
LOGO								
1.3 i	E	1343	D13B7		12/98 ▸	80351S04003	**508935**	
PRELUDE IV (91>96)								
2.0 i	E	1997	F20A4		10/91 ▸ 09/96	80351SS0003	**508940**	
2.2 i 16V	E	2157	H22A2		07/92 ▸ 09/96	80351SS0003	**508940**	
2.3 i 16V	E	2259	H23A2		10/91 ▸ 09/96	80351SS0003	**508940**	

⏭ **Multi-product Crosslist on section 1** Cross List Multi-produits, Section 1 **Crossliste siehe Kapitel 1** Crosslist Multiproducto en la sección 1
Lista Multi-produto na secção 1 Cross-list Multi prodotto nella sezione 1 **Rubriek 1 : Cross list "alle produkten"** Kombinovaný převodník v sekci 1
Crosslist multi-produse, secţie 1 Çoklu ürün çapraz listesi bölüm 1 τεdir Αντιστοιχίες προϊόντων στο κεφάλαιο 1

Bouteille déshydratante/
Cartouche déshydratante/
Accumulateur
Receiver dryer/
Cartridge dryer/
Accumulator

Trockner/
Trocknerkartusche/
Akkumulator
Filtro Deshidratante/
Cartucho deshidratante/
Acumulador

Filtro seco/
Accumulator
Filtro Disidratatore/
Cartuccia disidratante/
Accumulatore

Valeo

		cc				OE	Valeo	
HYUNDAI								
ACCENT (99>2003)								
1.3 i	E	1341	G4EH55, G4EH62, G4EH44		06/00 ▸ 01/03	9780225000	**509892**	
1.5 i, 1.5 i 16V	E	1495	G4FK-102, G4EK-90		06/00 ▸ 01/03	9780225000	**509892**	
ACCENT (2003>2004)								
1.3 i 12V	E	1341	G4EA		02/03 ▸	9780225000	**509892**	
1.6 i 16V	E	1599	G4ED		02/03 ▸	9780225000	**509892**	
ACCENT (2005>)								
1.4 i 16V	E	1399	G4EE		03/06 ▸	9780225000	**509892**	
1.6 i 16V	E	1599	G4EB		12/05 ▸	9780225000	**509892**	
ACCENT (99>)								
1.5 CRDi 12V	D	1493	D3-EA		04/02 ▸	9780225000	**509892**	
AMICA								
1.0 i 12V	E	999	G4HC		02/00 ▸ 12/03	9780102000	**509891**	
ATOS (MX)								
1.0 i 12V	E	999	G4HC		07/01 ▸	9780102000	**509891**	
I10								
1.1 i 12V	E	1086	1.1L-EPSILON		12/07 ▸	9780225000	**509892**	
MATRIX								
1.6 i	E	1599	G4GD, G4		05/01 ▸	9780225000	**509892**	
1.8 i	E	1795	G4GB		05/01 ▸	9780225000	**509892**	
1.5 CRDi, 1.5 CRDi 12V	D	1493	D3-EA81, D3-EA, D4FA		07/01 ▸	9780225000	**509892**	
SANTA FE								
2.0 i 16V	E	1997	G4JP		08/00 ▸ 02/06	9780225000	**509892**	
2.4 16V	E	2351	G4JS-G		02/01 ▸ 02/06	9780225000	**509892**	
2.7 V6	E	2656	G6BA-G		02/01 ▸ 02/06	9780225000	**509892**	
2.0 CRDi	D	1991	D4EA		04/01 ▸ 02/06	9780225000	**509892**	
SANTA FE 2								
2.7 V6	E	2656	G8-EA		03/06 ▸	9780225000	**509892**	
2.2 CRDi 16V	D	2188	D4-EB		03/06 ▸	9780225000	**509892**	
IVECO								
EUROCARGO								
60E10, 60E12, 60E14, 65E10 65E12, 65E14, 75E12, 75E14	D	3908	8040.25B.4200 8040.25X.4000 8040.45.4000		01/91 ▸ 12/00	98482342	**815966**	
75E15, 80E15, 80E18, 80E21 180E21, 100E15/K, 100E21	D	5861	8060.25R.4200LTC/4000 8060.45.4100/4180		01/91 ▸	98482342	**815966**	
120E15/K, 120E18/K, 120E23 130E15/K, 130E18/K	D	5861	8060.45S.6800/TCA 8060.25V.4080/4800		01/91 ▸	98482342	**815966**	
130E23, 135E18WR, 135E23WR 150E15/K, 150E18/K, 150E23	D	5861	8060.45.4100TCA 8060.45.6090 8060.25R.4280		01/91 ▸	98482342	**815966**	
EUROTECH								
180 E 34, 180 E 34 P 180 E 34 FP	D	9500	8460.41K.406		01/92 ▸	98482342	**815966**	
MP 180 E 38, MP 180 E 38 P MP 180 E 38 FP	D	9500	8460.41L.5020		01/92 ▸	98482342	**815966**	

• **New** Nouveau **Neu** Nuevo **Novo** Nuovo **Nieuw** Nowi **Новый** Novy **Nou** Yeni **Νέους**

		CC				OE	Valeo	
IVECO (.../...)								
EUROTECH (.../...)								
80 E 42, 180 E 42 P	D	13798	8210.42L.400		01/92 ▸	98482342	**815966**	
EUROSTAR								
LD 190 E 38 P	D	9500	8460.41L TCA		01/93 ▸ 02/02	98482342	**815966**	
JAGUAR								
XJ (86>94)								
2.9	E	2919	APTL, APTM		10/86 ▸ 09/90	CBC2319	**508902**	
3.2	E	3239	BPM		09/90 ▸ 09/94	CBC2319	**508902**	
3.6	E	3590	DPAM		10/86 ▸ 09/89	CBC2319	**508902**	
4.0	E	3980	EPCM		09/89 ▸ 09/94	CBC2319	**508902**	
5.3	E	5343	8SA		09/89 ▸ 06/92	CAC1881	**508900**	
6.0	E	5993	8C		02/93 ▸ 09/94	CAC1881	**508900**	
XJR								
3.6	E	3590	DPAM		11/88 ▸ 09/89	CBC2319	**508902**	
4.0	E	3980	EPCM		09/89 ▸ 09/94	CBC2319	**508902**	
XJS (83>91)								
3.6	E	3590	DPAM		09/83 ▸ 09/89	CAC1881	**508900**	
5.3	E	5345	HE		09/83 ▸ 04/91	CAC1881	**508900**	
XJS (91>96)								
4.0 190528 ▸ 190527	E	3980	EPCR		05/91 ▸ 06/93	CAC1881	**508900**	
5.3 190528 ▸ 190527	E	5343	8S		05/91 ▸ 06/93	CAC1881	**508900**	
6.0 190528 ▸ 190527	E	5993	8D		05/93 ▸ 06/93	CAC1881	**508900**	
S-TYPE								
3.0 V6	E	2967	AJ-V6		01/99 ▸	XR88040	**509944**	
4.0 V8	E	3996	AJ-V8		01/99 ▸ 04/02	XR88040	**509944**	
JEEP								
CHEROKEE (77>2001)								
2.5 i	E	2464	EPE		01/93 ▸ 10/99	4797001	**508932**	
4.0 i	E	3964	ERH-184		01/93 ▸ 10/99	4797002	**508892**	
4.0 i	E	3964	ERH-184	+🛢	01/93 ▸ 10/99	55035772	**508891**	
GRAND CHEROKEE (93>99)								
4.0 i	E	3964	ERH		01/93 ▸ 07/00	4797002	**508892**	
4.0 i	E	3964	ERH	+🛢	01/93 ▸ 07/00	55035772	**508891**	
KIA								
CARNIVAL								
2.5 i V6	E	2497	KRV6	Kit	10/01 ▸	1K52Y61E02	**509946**	
3.5 i V6	E	3497	6G72	Kit	07/02 ▸	1K52Y61E02	**509946**	
2.9 CRDi	D	2902	J3-CRDI	Kit	10/01 ▸	1K52Y61E02	**509946**	
SORENTO								
2.4 i	E	2351	G4JSG	Kit	08/02 ▸	978013E000	**509945**	
3.5 V6	E	3497	6G72	Kit	08/02 ▸	978013E000	**509945**	
2.5 CRDi	D	2497	D4CB	Kit	08/02 ▸	978013E000	**509945**	

⏭ **Multi-product Crosslist on section 1** Cross List Multi-produits, Section 1 **Crossliste siehe Kapitel 1** Crosslist Multiproducto en la sección 1
Lista Multi-produto na secção 1 Cross-list Multi prodotto nella sezione 1 **Rubriek 1 : Cross list "alle produkten"** Kombinovaný převodník v sekci 1
Crosslist multi-produse, secţie 1 Çoklu ürün çapraz listesi bölüm 1 τεdir Αντιστοιχίες προϊόντων στο κεφάλαιο 1

Bouteille déshydratante/
Cartouche déshydratante/
Accumulateur
Receiver dryer/
Cartridge dryer/
Accumulator

Trockner/
Trocknerkartusche/
Akkumulator
Filtro Deshidratante/
Cartucho deshidratante/
Acumulador

Filtro seco/
Accumulator
Filtro Disidratatore/
Cartuccia disidratante/
Accumulatore

Valeo

		cc				OE	Valeo	
LANCIA								
DEDRA (89>94)								
1.6 ie	E	1581	835A1.046, 835C1.000 835A1.000		03/89 ▸ 06/94	82478872	**508628**	
1.8 ie	E	1756	835C5.000, 835A2.000 835A2.046		03/89 ▸ 06/94	82478872	**508628**	
2.0 ie, 2.0 ie Turbo	E	1995	835A5.000, 835A7.000 835A7.046, 835A5.046		03/89 ▸ 06/94	82478872	**508628**	
1.9 TDs	D	1929	835A4.000		03/89 ▸ 06/94	82478872	**508628**	
DEDRA (94>99)								
1.6 ie	E	1581	159B9.000		07/94 ▸ 11/97	82478872	**508628**	
1.8 ie 16V	E	1747	182A2.000, 183A1.000		03/96 ▸ 09/99	60812379	**508630**	
1.8 ie ▸ 4137345	E	1756	836A5.000		07/94 ▸ 10/97	60812379	**508630**	
2.0 ie	E	1995	835A5.046		07/94 ▸ 09/99	82478872	**508628**	
1.9 TDs ▸ 4137345	D	1929	835A4.000, 160D1.000		07/94 ▸ 10/97	82478872	**508628**	
DELTA (93>99)								
1.4 ie	E	1372	160A1.046, 836A4.000		03/93 ▸ 08/99	82478872	**508628**	
1.6 ie	E	1581	835C1.000, 182A6.000		03/93 ▸ 08/99	82478872	**508628**	
1.6 ie 16V	E	1581	182A4.000		07/95 ▸ 08/99	60812379	**508630**	
1.8 ie 16V	E	1747	183A1.000, 182A2.000		07/95 ▸ 08/99	60812379	**508630**	
1.8 ie	E	1756	836A5.000, 836A6.000 835C2.000, 835C4.000		03/93 ▸ 08/99	82478872	**508628**	
2.0 i 16V	E	1995	836A3.000		03/93 ▸ 08/99	82478872	**508628**	
1.9 TD	D	1929	835A4.000, 160D1.000		06/94 ▸ 08/99	82478872	**508628**	
KAPPA								
2.0 ie 20V, 2.0 ie Turbo **2.0 ie Turbo 16V**	E	1995	838A4.000, 838A1.000 838A6.000, 834A4.000		10/94 ▸ 10/01	46527180	**508805**	
2.0 ie Turbo 20V	E	1998	175A3.000		05/98 ▸ 10/01	46527180	**508805**	
2.4 ie 20V	E	2446	838A2.000, 838B2.000 838A2.027		10/94 ▸ 10/01	46527180	**508805**	
3.0 ie V6 24V	E	2959	838B.000		10/94 ▸ 10/01	46527180	**508805**	
2.4 JTD, 2.4 TDs	D	2387	838A7.000, 838A8.000 838A3.000		10/94 ▸ 10/01	46527180	**508805**	
LYBRA								
1.6 i 16V	E	1581	182A4.000		09/99 ▸	46527180	**508805**	
1.6 i 16V	E	1596	182B6.000		09/99 ▸ 07/02	46527180	**508805**	
1.8 i 16V	E	1747	839A4.000, 839A7.000		09/99 ▸	46527180	**508805**	
2.0 i 20V	E	1998	182B7.000, 185A8.000		09/99 ▸	46527180	**508805**	
1.9 JTD	D	1910	AR32302, AR37101, 937A2.000		09/99 ▸	46527180	**508805**	
2.4 JTD	D	2387	839A5.000, AR32501 839A6.000		09/99 ▸	46527180	**508805**	
PHEDRA								
2.0 i 16V	E	1997	EW10J4	Kit	09/02 ▸	1488334080	**509525**	
3.0 i V6	E	2946	ES9J4S	Kit	09/02 ▸	1488334080	**509525**	
2.0 JTD 16V	D	1997	DW10ATED4	Kit	09/02 ▸	1488334080	**509525**	
2.2 JTD 16V	D	2179	DW12ATED4	Kit	09/02 ▸	1488334080	**509525**	
Y (95>2000)								
1.1 i	E	1108	176B2.000		04/97 ▸ 08/00	46527180	**508805**	
1.2 i, 1.2 i 16V	E	1242	840A3.000, 176B9.000		11/95 ▸ 08/00	46527180	**508805**	
1.4 i	E	1370	840A2.000, 840A4.000		11/95 ▸ 08/00	46527180	**508805**	

• **New** Nouveau **Neu** Nuevo **Novo** Nuovo **Nieuw** Nowi **Новый** Nowy **Nou** Yeni **Νέους**

		CC				OE	Valeo	
LANCIA (.../...)								
Y (2000>2003)								
1.2 i, 1.2 i 16V	E	1242	188A5.000, 188A4.000		09/00 ▸ 09/03	46811665	**509592**	
YPSILON (2003>)								
1.2 i, 1.2 i 16V	E	1242	188A5.000, 188A4.000		10/03 ▸	46811665	**509592**	
1.4 i 16V	E	1368	843A1.000		10/03 ▸	46811665	**509592**	
1.3 JTD 16V	D	1248	188A9.000		10/03 ▸	46811665	**509592**	
ZETA								
2.0 ie 16V	E	1997	EW10J4/L4		01/01 ▸ 08/02	9617682080	**508741**	
2.0 ie 16V, 2.0 ie Turbo	E	1998	RFV, RGX		10/94 ▸ 12/00	9617682080	**508741**	
2.0 JTD	D	1997	DW10ATED4, DW10ATED/L4		01/00 ▸ 08/02	9617682080	**508741**	
2.1 TD	D	2088	P8C		03/96 ▸ 12/00	9617682080	**508741**	
LAND ROVER								
DISCOVERY (98>2004)								
4.0 i V8 16V	E	3950	35D-185		07/97 ▸ 11/04	JRJ100550	**509566**	
2.5 Td5	D	2496	STORM-TD5		11/98 ▸ 11/04	JRJ100550	**509566**	
FREELANDER								
1.8 i 16V	E	1796	18K4FK	Kit	10/97 ▸ 08/00	JRJ100410	**509528**	
1.8 i 16V	E	1796	18K4FK		10/97 ▸ 08/00	JRJ100760	**509499**	
2.5 i V6	E	2497	25K6	Kit	03/00 ▸ 09/03	JRJ100410	**509528**	
2.5 i V6	E	2497	25K6		03/00 ▸ 09/03	JRJ100760	**509499**	
2.0 Td4	D	1951	M47-112	Kit	09/00 ▸ 09/03	JRJ100410	**509528**	
2.0 Td4	D	1951	M47-112		09/00 ▸ 09/03	JRJ100760	**509499**	
2.0 D	D	1994	20L4D	Kit	10/97 ▸ 09/00	JRJ100410	**509528**	
2.0 D	D	1994	20L4D		10/97 ▸ 09/00	JRJ100760	**509499**	
RANGE ROVER (94>2002)								
4.0 V8	E	3947	42D-190		09/94 ▸ 02/02	AWR1374	**509690**	
4.6 V8	E	4552	46D-218		09/94 ▸ 02/02	AWR1374	**509690**	
2.5 TD	D	2497	25/6TM		09/94 ▸ 02/02	AWR1374	**509690**	
LEXUS								
GS (93>97)								
GS 300 3.0 i 24V	E	2997	2JZ-GE-221		08/93 ▸ 08/97	8847447010	**509794**	
GS (97>2004)								
GS 300 3.0 i 24V	E	2997	2JZ-GE-219, 2JZ-GE-221		09/97 ▸ 01/05	8847447010	**509794**	
GS 400 4.0 i V8 32V	E	3969	1UZ-FE		12/97 ▸ 10/00	8847447010	**509794**	
GS 430 4.3 i V8 32V	E	4293	3UZ-FE		10/00 ▸ 01/05	8847447010	**509794**	
IS								
IS 200 2.0 i 24V	E	1988	1G-FE		03/99 ▸ 09/05	8847447010	**509794**	
IS 300 3.0 i 24V	E	2997	2JZ-GE		09/01 ▸ 09/05	8847447010	**509794**	
LS400 (89>94)								
4.0 i V8 32V	E	3969	1UZ-FE		12/89 ▸ 08/92	8847150010	**508805**	
LS430								
4.3 i V8 32V	E	4293	3UZ-FE		08/00 ▸ 06/03	8847447010	**509794**	
LX470								
4.7 i V8 32V	E	4664	2UZ-FE		08/02 ▸ 08/07	8847417010	**509794**	

		cc				OE	Valeo	
LEXUS (.../...)								
LX 570								
5.7 i V8 32V	E	5663	3URFE		11/07 ▸	8847417010	**509794**	
RX 300								
3.0 i V6 24V	E	2995	1MZ-FE		10/00 ▸ 02/03	8847447010	**509794**	
SC430								
4.3 i V8 32V	E	4293	3UZ-FE		05/01 ▸	8847447010	**509794**	
MAN								
F2000								
19.273 F, 19.273 FL, 19.273 FLL 19.293 FC, 19.293 FLC 19.293 FLLC	D	9973	D2865LF20/21/22/23/24		01/94 ▸ 12/95	0008301783	**815971**	
19.323 FC, 19.323 FLC 19.323 FLLC, 26.273 FNLC 26.273 FNLLC, 26.273 FVLC	D	9973	D2865LF20/21/22/23/24		01/94 ▸ 12/95	0008301783	**815971**	
19.403 FC, 19.403 FLC 19.403 FLLC, 23.403 FNLLC 26.403 FNLC, 26.403 FNLLC 26.403 FVLC	D	11967	D2866LF20/21/22/31/34/35		01/94 ▸ 12/95	0008301783	**815971**	
27.403 DFAS, 32.403 VFK 33.403 DFAC, 40.403 DFAK	D	11967	D2866LF20/21/22/31/34/35		01/94 ▸ 12/95	0008301783	**815971**	
19.463 FC, 19.463 FLC 19.463 FLLC, 19.464 FC 19.464 FLC, 19.464 FLLC 32.463 VFC	D	12816	D2876LF02/06		01/94 ▸	0008301783	**815971**	
19.603 FLS, 26.603 DFC 26.603 DFLC, 27.603 DFAS 33.603 DFAC	D	18273	D2840LF20		01/96 ▸	0008301783	**815971**	
TGA								
26.280 FNLC, 26.280 FNLLC 26.280 FNLLW, 26.330 FNLC 26.330 FNLLC, 26.330 FNLLW	D	6871	D0836LF41/44		11/02 ▸	81619106017	**815972**	
18.310, 18.320 FC, 18.320 FLC 18.320 FLLC, 18.320 FLLC/N 18.320 FLLW, 18.320 FLLW/N	D	10518	D2066LF03/13/33		05/04 ▸	81619106017	**815972**	
18.350, 18.360 FC, 18.360 FLC 18.360 FLLC, 18.360 FLLC/N 18.360 FLLW, 18.360 FLLW/N	D	10518	D2066LF03/13/33		05/04 ▸	81619106017	**815972**	
18.310 FC, 18.310 FLC 18.310 FLLC, 18.310 FLLC/N 18.310 FLLW, 18.360 FC 18.360 FLC, 18.360 FLLC 18.360 FLLC/N, 18.360 FLLW 18.410 FC, 18.410 FLC 18.410 FLLC, 18.410 FLLC/N 18.410 FLLW	D	11967	D2866LF28/32		04/00 ▸	81619106017	**815972**	
18.480 FHLS, FHLS/M, 19.480 FS/M FRS/M-WW, 26.480 FDHK 41.480 FFDAK	D	12412	D2676LF01/02/03/04/05/11/12		02/04 ▸	81619106017	**815972**	
18.460 FC, FLC, FLLC, FLLC/N FLLW, 24.460 FNLLC/N 41.530 FVDS, FVDLS	D	12816	D2876LF04/05/07/12/13/25		04/00 ▸	81619106017	**815972**	
41.660 FVDS, FVDLS	D	18273	D2840LF25		09/02 ▸	81619106017	**815972**	

		CC				OE	Valeo	
MAZDA								
2								
1.25	E	1242	FUJA	- PSS	04/03 ▸	DE94615A0	**509934**	
1.4	E	1388	FXJA	- PSS	04/03 ▸	DE94615A0	**509934**	
1.6	E	1596	FYJA	- PSS	04/03 ▸	DE94615A0	**509934**	
1.4 CD	D	1399	F6JA	- PSS	04/03 ▸	DE94615A0	**509934**	
3								
1.4 i 16V	E	1349	MZR14		06/03 ▸	BP4K61501	**509924**	
1.6 i 16V	E	1598	MZR16		06/03 ▸	BP4K61501	**509924**	
2.0 i 16V	E	1999	MZR20		06/03 ▸	BP4K61501	**509924**	
5								
1.8 i 16V	E	1798	MZR18		02/05 ▸	BP4K61501	**509924**	
2.0 i 16V	E	1999	MZR20		02/05 ▸	BP4K61501	**509924**	
2.0 CD, 2.0 CD 16V	D	1998	MZR-CD20		02/05 ▸	BP4K61501	**509924**	
6 (2002>)								
1.8 i 16V	E	1798	MZR18	Kit	02/02 ▸	GJ6A61501A	**509925**	
2.0 i 16V	E	1999	MZR20	Kit	02/02 ▸	GJ6A61501A	**509925**	
2.3 DISI Turbo, 2.3 i 16V	E	2261	L3	Kit	02/02 ▸	GJ6A61501A	**509925**	
2.0 DiTD, 2.0 DiTD 16V	D	1998	RF-136, MZR-CD20	Kit	06/02 ▸	GJ6A61501A	**509925**	
6 (2007>)								
2.5 i 16V	E	2488	MZR25	Kit	08/07 ▸	GJ6A61501A	**509925**	
2.0 CD 16V, 2.0 MZR-CD	D	1998	MZR-CD20/F	Kit	11/07 ▸	GJ6A61501A	**509925**	
626 (GD) (87>92)								
1.6 529438 ▸	E	1587	F6-83		10/87 ▸	GJ8361500D	**508951**	
1.8 ▸ 529438	E	1789	F8-K9, F8-K8, F8		10/87 ▸	GJ8361500C	**508951**	
2.0, 2.0 i, 2.0 i 16V ▸ 529438	E	1998	FE-GB, FE-FN, FE-FK, FE-GA FE-FL, FE-FJ		10/87 ▸	GJ8361500C	**508951**	
2.2 i ▸ 529438	E	2184	F2-G2, F2-G3, F2-G4		08/89 ▸	GJ8361500C	**508951**	
2.0 D 529438 ▸	D	1998	RF-D1		10/87 ▸	GJ8361500D	**508951**	
626 (GE) (91>97)								
2.5 i 271863 ▸	E	2497	KL-21, KL-22		02/92 ▸	GC3N61500B	**508951**	
CX-7 (2007>)								
2.3 i Turbo 16V	E	2261	MZR-DISI TURBO	Kit	05/07 ▸ 09/09	GJ6A61501A	**509925**	
CX-7 (2009>)								
2.3 i Turbo 16V	E	2261	MZR-DISI TURBO	Kit	06/09 ▸	GJ6A61501A	**509925**	
2.2 CDVi 16V	D	2184	MZR-CD22	Kit	09/09 ▸	GJ6A61501A	**509925**	
MPV								
3.0 V6	E	2954	JE-96		06/96 ▸ 10/99	LB8361501	**508805**	
2.5 TD	D	2499	WL-01		12/95 ▸ 10/99	LB8361501	**508805**	
MX6								
2.0 i 272714 ▸	E	1991	FS-19		07/91 ▸	GC3N61500B	**508951**	
2.5 i V6 ▸ 272714	E	2497	KL-19, KL-20		07/91 ▸	GA5R61500A	**508951**	

		cc				OE	Valeo	
MERCEDES								
190 (201)								
1.8	E	1797	102.919, 102.910		03/90 ▸ 06/93	2018300083	**508594**	
2.0, 2.0 i	E	1997	102.938, 102.921/924 102.961-122, 102.962-122		12/82 ▸ 06/93	2018300083	**508594**	
2.3 i, 2.3 i 16S	E	2299	102.985-132, 102.983		08/84 ▸ 06/93	2018300083	**508594**	
2.5 i 16S	E	2463	102.991		07/89 ▸ 06/93	2018300083	**508594**	
2.5 i 16S	E	2498	102.990		09/88 ▸ 06/93	2018300083	**508594**	
2.6 i	E	2599	103.942-160		01/87 ▸ 06/93	2018300083	**508594**	
2.0 D	D	1997	601.911		12/83 ▸ 06/93	2018300083	**508594**	
2.5 D, 2.5 D Turbo	D	2497	602.961, 602.911-94		01/85 ▸ 06/93	2018300083	**508594**	
200/300 (124)								
200, 200 CE i, 200E i, 200T/TE i	E	1997	102.963, 102.922		12/84 ▸ 09/92	1248300183	**508731**	
200 CE i	E	1998	111.940		10/92 ▸ 06/93	1248300183	**508731**	
220 CE i	E	2199	111.960		10/92 ▸ 06/93	1248300183	**508731**	
230 CE i, 230E i, 230TE i	E	2299	102.982		12/84 ▸ 09/92	1248300183	**508731**	
260E i	E	2599	103.940, 103.943		01/85 ▸ 09/92	1248300183	**508731**	
300 CE i, 300E i, 300TE i	E	2962	103.980/983/985, 104.980		03/85 ▸ 06/93	1248300183	**508731**	
320 CE i	E	3199	104.992		10/92 ▸ 06/93	1248300183	**508731**	
500E i	E	4973	119.974		06/90 ▸ 06/93	1248300183	**508731**	
200D, 200TD	D	1997	601.912		12/84 ▸ 06/93	1248300183	**508731**	
250D, 250D TD, 250DL D, 250TD	D	2497	602.912, 602.962		12/84 ▸ 06/93	1248300183	**508731**	
300D, 300D TD, 300TD, 300TD	D	2996	603.912/913, 603.960/963		12/84 ▸ 06/93	1248300183	**508731**	
A CLASS (168) (97>2003)								
A140 i	E	1397	166.940		05/97 ▸ 06/04	1688300458	**509396**	
A140 i	E	1397	166.940		05/97 ▸ 06/04	1688300858	**509411**	
A160 i	E	1598	166.960		05/97 ▸ 06/04	1688300458	**509396**	
A160 i	E	1598	166.960		05/97 ▸ 06/04	1688300858	**509411**	
A190 i	E	1898	166.990		04/99 ▸ 06/04	1688300458	**509396**	
A190 i	E	1898	166.990		04/99 ▸ 06/04	1688300858	**509411**	
A210 i	E	2084	166.995		01/02 ▸ 06/04	1688300458	**509396**	
A210 i	E	2084	166.995		01/02 ▸ 06/04	1688300858	**509411**	
A160CDI, A170CDI	D	1689	668.940, 668.942, 668.941		05/98 ▸ 06/04	1688300458	**509396**	
A160CDI, A170CDI	D	1689	668.942, 668.941, 668.940		05/98 ▸ 06/04	1688300858	**509411**	
C CLASS (202)								
C180 i A344661 ▸	E	1799	111.920, 111.921		03/96 ▸ 02/01	2028300283	**508909**	
C180 i, C200 i, C200K i F331441 ▸	E	1998	111.941, 111.945, 111.956 111.944, 111.952		03/96 ▸ 02/01	2028300283	**508909**	
C220 i F331441 ▸	E	2199	111.961		03/96 ▸ 03/00	2028300283	**508909**	
C230 i, C230K i F331441 ▸	E	2295	111.975, 111.974		03/96 ▸ 02/01	2028300283	**508909**	
C240 i	E	2398	112.910		06/97 ▸ 02/01	2028300283	**508909**	
C240 i	E	2597	112.915		04/00 ▸ 02/01	2028300283	**508909**	
C280 i F331441 ▸	E	2799	104.941, 112.920		03/96 ▸ 02/01	2028300283	**508909**	
C36 i A344661 ▸	E	3606	C36AMG		03/96 ▸ 03/00	2028300283	**508909**	
C43 AMG i	E	4266	113.944		10/97 ▸ 02/01	2028300283	**508909**	
C200D A344661 ▸	D	1997	601.913		03/96 ▸ 03/00	2028300283	**508909**	
C200D	D	1998	604.915		03/96 ▸ 02/01	2028300283	**508909**	
C200 CDI, C200 CDI, C220 CDI	D	2151	611.960, 611.960A		03/98 ▸ 02/01	2028300283	**508909**	
C220D F331441 ▸	D	2155	604.910		03/96 ▸ 02/01	2028300283	**508909**	
C250D, C250TD A344661 ▸	D	2497	605.960, 605.910		03/96 ▸ 02/01	2028300283	**508909**	

		CC				OE	Valeo	
MERCEDES (.../...)								
C CLASS (203)								
C180K i, C200K i, C230K i	E	1796	271.940/942, 271.946/948		05/02 ▸	2038350147	**509893**	
C180 i, C200K i	E	1998	111.951, 111.955		10/00 ▸ 05/02	2038350147	**509893**	
C230K i	E	2295	111.981		03/01 ▸ 05/02	2038350147	**509893**	
C230 i	E	2496	272.920		01/05 ▸	2038350147	**509893**	
C240 i	E	2597	112.916, 112.912		05/00 ▸	2038350147	**509893**	
C280 i	E	2996	272.941, 272.940		01/05 ▸	2038350147	**509893**	
C320 i, C32	E	3199	112.946, 112.961, 112.953		05/00 ▸	2038350147	**509893**	
C350 i	E	3498	272.960, 272.970		01/05 ▸	2038350147	**509893**	
C55 i	E	5439	113.988		02/04 ▸	2038350147	**509893**	
C200 CDI, C220 CDI	D	2148	611.942/962, 646.962/963		05/00 ▸	2038350147	**509893**	
C270 CDI	D	2685	612.962		05/00 ▸	2038350147	**509893**	
C30 CDI	D	2950	612.990		09/02 ▸	2038350147	**509893**	
C320 CDI	D	2987	642.910		01/05 ▸	2038350147	**509893**	
CLK (208)								
CLK200 i, CLK200K i	E	1998	111.944, 111.956, 111.945		06/97 ▸ 02/02	2028300283	**508909**	
CLK230K i	E	2295	111.975, 111.982		06/97 ▸ 02/02	2028300283	**508909**	
CLK320 i	E	3199	112.940		06/97 ▸ 02/02	2028300283	**508909**	
CLK430 i	E	4266	113.943		06/98 ▸ 02/02	2028300283	**508909**	
CLK55 i	E	5439	113.984		06/99 ▸ 06/02	2028300283	**508909**	
CLK (209)								
CLK 200, CLK 200 i	E	1796	271.940, 271.942		03/02 ▸ 01/05	2038350147	**509893**	
CLK 200, CLK 200 i	E	1796	271.940, 271.942	Kit	01/05 ▸	2118350047	**509529**	
CLK 240 i	E	2597	112.912		03/02 ▸ 01/05	2038350147	**509893**	
CLK 240 i	E	2597	112.912	Kit	01/05 ▸ 05/05	2118350047	**509529**	
CLK 280 i	E	2996	272.940		01/05 ▸ 07/05	2038350147	**509893**	
CLK 280 i	E	2996	272.940	Kit	07/05 ▸	2118350047	**509529**	
CLK 320 i	E	3199	112.955		03/02 ▸ 01/05	2038350147	**509893**	
CLK 320 i	E	3199	112.955	Kit	01/05 ▸ 05/05	2118350047	**509529**	
CLK 350 i	E	3498	272.960		01/05 ▸ 07/05	2038350147	**509893**	
CLK 350 i	E	3498	272.960	Kit	07/05 ▸	2118350047	**509529**	
CLK 500 i	E	4966	113.968		03/02 ▸ 07/05	2038350147	**509893**	
CLK 500 i	E	4966	113.968	Kit	07/05 ▸	2118350047	**509529**	
CLK 55 i	E	5439	113.987		03/02 ▸ 07/05	2038350147	**509893**	
CLK 55 i	E	5439	113.987	Kit	07/05 ▸	2118350047	**509529**	
CLK 63 i	E	6208	156.982	Kit	04/06 ▸	2118350047	**509529**	
CLK 220 CDi	D	2148	646.966		06/05 ▸ 07/05	2038350147	**509893**	
CLK 220 CDi	D	2148	646.966	Kit	07/05 ▸	2118350047	**509529**	
CLK 270 CDi	D	2685	612.967		03/02 ▸ 01/05	2038350147	**509893**	
CLK 270 CDi	D	2685	612.967	Kit	01/05 ▸ 05/05	2118350047	**509529**	
CLK 320 CDi	D	2987	642.910		06/05 ▸ 07/05	2038350147	**509893**	
CLK 320 CDi	D	2987	642.910	Kit	07/05 ▸	2118350047	**509529**	
CLS								
CLS350 i	E	3498	272.964,272.985	Kit	07/04 ▸ 01/08	2118350047	**509529**	
CLS500 i	E	4966	113.967	Kit	07/04 ▸ 01/08	2118350047	**509529**	
CLS55 i	E	5439	113.990	Kit	01/05 ▸ 01/08	2118350047	**509529**	
CLS320CDI CDI	D	2987	642.920	Kit	06/05 ▸ 01/08	2118350047	**509529**	
E CLASS (124)								
E200 i, E200T i	E	1998	111.940		07/93 ▸ 02/96	1248300283	**508731**	
E280L i	E	2799	104.942		07/93 ▸ 09/95	1248300283	**508731**	
E300 i, E300T i	E	2962	103.985		07/93 ▸ 02/96	1248300283	**508731**	
E320T i	E	3199	104.992		07/93 ▸ 02/96	1248300283	**508731**	
E420 i	E	4196	119.975		07/93 ▸ 09/95	1248300283	**508731**	
E500 i	E	4973	119.974		07/93 ▸ 09/95	1248300283	**508731**	
E200D D	D	1997	601.912		07/93 ▸ 09/95	1248300283	**508731**	

⏭ **Multi-product Crosslist on section 1** Cross List Multi-produits, Section 1 **Crossliste siehe Kapitel 1** Crosslist Multiproducto en la sección 1
Lista Multi-produto na secção 1 Cross-list Multi prodotto nella sezione 1 **Rubriek 1 : Cross list "alle produkten"** Kombinovaný převodník v sekci 1
Crosslist multi-produse, secţie 1 Çoklu ürün çapraz listesi bölüm 1 τεdir Αντιστοιχίες προϊόντων στο κεφάλαιο 1

		cc				OE	Valeo	
MERCEDES (.../...)								
E CLASS (124) (.../...)								
E250D D, E250DL D, E250TD	D	2497	602.962, 605.911		07/93 ▸ 02/96	1248300283	**508731**	
E300TD D, E300TD TD	D	2996	606.910, 603.960, 603.963		07/93 ▸ 02/96	1248300283	**508731**	
E CLASS (210)								
E200 i, E200L i	E	1998	111.942, 111.947, 111.957		04/95 ▸ 03/96	2108300483	**508911**	
E200 i J023681 ▸	E	1998	111.942		03/96 ▸ 06/99	2108300383	**509716**	
E230 i ▸ A160165	E	2295	111.970		04/95 ▸ 03/96	2108300283	**508911**	
E230 i A160166 ▸	E	2295	111.970		03/96 ▸ 06/99	2108300383	**509716**	
E240 i	E	2398	112.911		04/95 ▸ 03/03	2108300483	**508911**	
E240 i	E	2597	112.914		06/99 ▸ 03/03	2108300483	**508911**	
E280 i, E280L i	E	2799	104.945, 112.921		04/95 ▸ 03/96	2108300483	**508911**	
E280 i, E280L i J023681 ▸	E	2799	112.921, 104.945		03/96 ▸ 06/99	2108300383	**509716**	
E320 i ▸ J023680	E	3199	104.995, 112.941		04/95 ▸ 03/96	2108300483	**508911**	
E320 i J023681 ▸	E	3199	104.995, 112.941		03/96 ▸ 06/99	2108300383	**509716**	
E420 i ▸ A160165	E	4196	119.985		04/95 ▸ 03/96	2108300483	**508911**	
E420 i A160166 ▸	E	4196	119.985		03/96 ▸ 06/99	2108300383	**509716**	
E430 i	E	4266	113.940		03/96 ▸ 03/03	2108300483	**508911**	
E50 i ▸ A160165	E	4973	119.AMG		04/95 ▸ 03/96	2108300483	**508911**	
E50 i J023681 ▸	E	4973	119.AMG		03/96 ▸ 06/99	2108300383	**509716**	
E55 i	E	5439	113.980		03/96 ▸ 03/02	2108300483	**508911**	
E200D ▸ J023680	D	1998	604.917		04/95 ▸ 03/96	2108300283	**508911**	
E200D J023681 ▸	D	1998	604.917		03/96 ▸ 06/99	2108300383	**509716**	
E200CDI, E220CDI	D	2148	611.961		03/96 ▸ 03/03	2108300483	**508911**	
E220D ▸ J023680	D	2155	604.912		04/95 ▸ 03/96	2108300283	**508911**	
E220D J023681 ▸	D	2155	604.912		03/96 ▸ 06/99	2108300383	**509716**	
E250D, E250DL D, E250TD ▸ A160165	D	2497	605.912, 605.962		04/95 ▸ 03/96	2108300283	**508911**	
E250D, E250DL D A160166 ▸	D	2497	605.912		03/96 ▸ 06/99	2108300383	**509716**	
E270CDI	D	2685	612.961		06/99 ▸ 03/03	2108300483	**508911**	
E290TD, E290TDL TD ▸ A160165	D	2874	602.982		04/95 ▸ 03/96	2108300283	**508911**	
E290TD, E290TDL TD A160166 ▸	D	2874	602.982		03/96 ▸ 06/99	2108300383	**509716**	
E300D, E300TD ▸ J023680	D	2996	606.962, 606.912		04/95 ▸ 03/96	2108300483	**508911**	
E300D, E300TD J023681 ▸	D	2996	606.912, 606.962		03/96 ▸ 06/99	2108300383	**509716**	
E320CDI	D	3224	613.961		06/99 ▸ 03/03	2108300483	**508911**	
E CLASS (211)								
E 200 i	E	1796	271.941, 271.956	Kit	09/02 ▸	2118350047	**509529**	
E 240 i	E	2597	112.913, 112.917	Kit	03/02 ▸ 06/05	2118350047	**509529**	
E 320 i	E	3199	112.954, 112.949	Kit	03/02 ▸	2118350047	**509529**	

		CC				OE	Valeo	

MERCEDES (.../...)

E CLASS (211) (.../...)

E 500 i 5.0	E	4966	113.967, 113.969	Kit	03/02 ▸ 03/06	2118350047	**509529**	
E 500 i 5.4	E	5461	273.960/962	Kit	04/06 ▸	2118350047	**509529**	
E 55 i	E	5439	113.990	Kit	07/02 ▸	2118350047	**509529**	
E 200 CDI, E 220 CDI	D	2148	646.951/961, 646.820/821	Kit	03/02 ▸	2118350047	**509529**	
E 270 CDI	D	2685	647.961	Kit	03/02 ▸ 05/05	2118350047	**509529**	
E 280 CDI, E 320 CDI	D	3222	648.961	Kit	03/02 ▸ 05/05	2118350047	**509529**	
E 400 CDI	D	3996	628.961	Kit	03/04 ▸ 03/06	2118350047	**509529**	
E 420 CDI	D	3996	629.910	Kit	04/06 ▸	2118350047	**509529**	

S CLASS (220)

S280 i	E	2799	112.922		03/99 ▸	2208300083	**509559**	
S320 i, S320L i	E	3199	112.944		09/98 ▸	2208300083	**509559**	
S350 i, S350L i	E	3724	112.972, 112.975		09/02 ▸ 09/04	2208300083	**509559**	
S430 i, S430L i	E	4266	113.941,113.948		09/98 ▸	2208300083	**509559**	
S500 i, S500L i	E	4966	113.960,113.966		09/98 ▸	2208300083	**509559**	
S55 i	E	5413	113.991		06/02 ▸ 09/04	2208300083	**509559**	
S55 i	E	5439	113.986		01/00 ▸ 09/04	2208300083	**509559**	
S600L i	E	5513	275.950		09/02 ▸ 09/04	2208300083	**509559**	
S600L i	E	5786	137.970		01/00 ▸ 09/04	2208300083	**509559**	
S65 i	E	5980	275.980		01/04 ▸ 09/04	2208300083	**509559**	
S320CDI, S320CDIL	D	3224	613.960, 648.960		01/00 ▸ 09/04	2208300083	**509559**	
S400CDI	D	3996	628.960		04/00 ▸ 09/04	2208300083	**509559**	

SL (129)

SL280 i ▸ 148143	E	2799	104.943		08/93 ▸ 07/01	1298300183	**508906**	
SL280 i 148144 ▸	E	2799	104.943		08/93 ▸ 07/01	1298300283	**508907**	
300 i ▸ 148143	E	2960	104.981		03/89 ▸ 07/93	1298300183	**508906**	
300 i ▸ 148143	E	2962	103.984		03/89 ▸ 07/93	1298300183	**508906**	
SL320 i ▸ 148143	E	3199	104.991		08/93 ▸ 07/01	1298300183	**508906**	
SL320 i 148144 ▸	E	3199	104.991		08/93 ▸ 07/01	1298300283	**508907**	
500 i, SL500 i ▸ 148143	E	4973	119.982, 119.972, 119.960		03/89 ▸ 07/01	1298300183	**508906**	
500 i, SL500 i 148144 ▸	E	4973	119.982, 119.972, 119.960		03/89 ▸ 07/01	1298300283	**508907**	

SLK (R170)

SLK200 i, SLK200K i	E	1998	111.946, 111.943		08/96 ▸ 03/00	1708300083	**509717**	
SLK230K i	E	2295	111.973		08/96 ▸ 03/00	1708300083	**509717**	

SLK (R171)

SLK200K i	E	1795	113.989		03/04 ▸	2038350147	**509893**	

SLR

5.5 i V8 32V	E	5439	155.980	Kit	04/04 ▸ 07/09	2118350047	**509529**	

V CLASS (638/2)

V200	E	1998	111.948		10/96 ▸ 12/02	9015500080	**509560**	
V230	E	2295	111.978		10/96 ▸ 12/02	9015500080	**509560**	
V280	E	2799	104.900		10/96 ▸ 12/02	9015500080	**509560**	
V200 CDI, V220 CDI	D	2151	611.980		01/99 ▸ 12/02	9015500080	**509560**	
V230TD	D	2299	601.970		10/96 ▸ 12/02	9015500080	**509560**	

		cc				OE	Valeo	
MERCEDES								
SPRINTER (95>)								
2.3 i	E	2295	111.979		02/95 ▸ 01/06	9015500180	**509562**	
2.3 D	D	2299	601.943		02/95 ▸ 01/06	9015500180	**509562**	
2.9 D	D	2874	602.980		02/95 ▸ 01/06	9015500180	**509562**	
VIANO								
3.0 i, 3.2 i	E	3199	112.951		01/03 ▸	6398350547	**509926**	
3.7 i	E	3724	112.97-231		06/04 ▸	6398350547	**509926**	
2.0 CDI, 2.2 CDI	D	2148	646.982		01/03 ▸	6398350547	**509926**	
VITO (96>2003)								
2.0 i	E	1998	111.948		01/96 ▸ 09/03	9015500080	**509560**	
2.3 i	E	2295	111.978, 111.980		12/96 ▸ 09/03	9015500080	**509560**	
2.2 CDI	D	2151	611.980		03/99 ▸ 09/03	9015500080	**509560**	
2.3 D, 2.3 TD	D	2299	601.970, 601.942		01/96 ▸ 09/03	9015500080	**509560**	
VITO (2003>)								
3.2 i	E	3199	112.951		01/03 ▸	6398350547	**509926**	
3.7 i	E	3724	112.976		06/04 ▸	6398350547	**509926**	
2.2 CDI	D	2148	646.982, 646.983		01/03 ▸	6398350547	**509926**	
MERCEDES								
ACTROS								
1831/L/S/LS/K/AK	D	11946	OM 541.920, OM 541.926 OM 541.941		04/96 ▸ 10/02	81619106012	**815971**	
1835/L/LS/K/AK	D	11946	OM 541.922, OM 541.927		04/97 ▸ 10/02	81619106012	**815971**	
1840/L/LS/K/AK	D	11946	OM 541.923, OM 541.924		04/96 ▸ 10/02	81619106012	**815971**	
1843/L/LS/K/AK	D	11946	OM 541.921, OM 541.925 OM 541.947		04/96 ▸ 10/02	81619106012	**815971**	
2031 A/AS/K/AK	D	11946	OM 541.920, OM 541.926		04/96 ▸ 10/02	81619106012	**815971**	
2035A/S	D	11946	OM 541.922, OM 541.927 OM 541.943		04/96 ▸ 10/02	81619106012	**815971**	
2040S/AS/AK	D	11946	OM 541.923, OM 541.924		04/96 ▸ 10/02	81619106012	**815971**	
2043AS	D	11946	OM 541.925		04/96 ▸ 10/02	81619106012	**815971**	
2531/L/LS	D	11946	OM 541.920, OM 541.940		04/96 ▸ 10/02	81619106012	**815971**	
2535L/LS	D	11946	OM 541.922, OM 541.942		04/96 ▸ 10/02	81619106012	**815971**	
2540/L/LS	D	11946	OM 541.923, OM 541.944		09/96 ▸ 10/02	81619106012	**815971**	
2543/L/LS	D	11946	OM 541.925, OM 541.946		09/96 ▸ 10/02	81619106012	**815971**	
2631/L/K/B	D	11946	OM 541.920		09/96 ▸ 10/02	81619106012	**815971**	
2635/L/K/B	D	11946	OM 541.922		09/96 ▸ 10/02	81619106012	**815971**	
2640/L/LS/LK/B	D	11946	OM 541.923		09/96 ▸ 10/02	81619106012	**815971**	
2643/L/LS/LK/B	D	11946	OM 541.925		09/96 ▸ 10/02	81619106012	**815971**	
3231B/K	D	11946	OM 541.920		04/97 ▸ 10/02	81619106012	**815971**	
3235K/B	D	11946	OM 541.922		04/97 ▸ 10/02	81619106012	**815971**	
3240 B/K	D	11946	OM 541.923		04/97 ▸ 10/02	81619106012	**815971**	
3243 B/K	D	11946	OM 541.925		04/97 ▸ 10/02	81619106012	**815971**	
3331 A/S/AS/K/AK/B	D	11946	OM 541.920, OM 541.926		04/97 ▸ 10/02	81619106012	**815971**	
3335 K/B/S	D	11946	OM 541.922		04/97 ▸ 10/02	81619106012	**815971**	
3340 A/S/AS/K/AK/B	D	11946	OM 541.923, OM 541.924		04/97 ▸ 10/02	81619106012	**815971**	
3343 S/AS/K/AK/B	D	11946	OM 541.921, OM 541.925		04/97 ▸ 10/02	81619106012	**815971**	
4140 K/AK/B	D	11946	OM 541.923, OM 541.924		04/97 ▸ 10/02	81619106012	**815971**	
4143 K/AK	D	11946	OM 541.921, OM 541.925		04/97 ▸ 10/02	81619106012	**815971**	
1832, L, LL,LS, LLS,K,AK	D	11946	OM 541.940/970/971		04/03 ▸	0008301883	**815974**	
1836, L/LL, 1836 LS, LLS/K/AK	D	11946	OM 541.942		04/03 ▸	0008301883	**815974**	
1841, L, LL,LS, LLS/K	D	11946	OM 541.944/974		04/03 ▸	0008301883	**815974**	
1844, L, LL/LS, LLS/K/A/AK	D	11946	OM 541.921/946/976		04/03 ▸	0008301883	**815974**	
1846, L, LL/LS, LLS/K/A/AK	D	11946	OM 541.948/980/981		04/03 ▸	0008301883	**815974**	
1848, L, LL/LS, LLS/K/A/AK	D	11946	OM 541.948/978, OM 542.921		04/03 ▸	0008301883	**815974**	

		CC				OE	Valeo	
MERCEDES (.../...)								
ACTROS (.../...)								
1850/1851, L, LL/LS, LLS/K/AK	D	11946	OM 542.940/960		04/03 ▸	0008301883	**815974**	
1854, L/LS	D	11946	OM 542.942/962		04/03 ▸	0008301883	**815974**	
1858, L/LS	D	11946	OM 542.944		04/03 ▸	0008301883	**815974**	
2032/2032 A/AE/K/AK/S/AS	D	11946	OM 541.920/926/940/941		04/03 ▸	0008301883	**815974**	
2032/2032 A/AE/AK/S/AS	D	11946	OM 541.922/927/942/943/972		04/03 ▸	0008301883	**815974**	
2041/K/AK/S/AS	D	11946	OM 541.923/924/944/974		04/03 ▸	0008301883	**815974**	
2044/S/AS/AK	D	11946	OM 541.921/925/946/947/976		04/03 ▸	0008301883	**815974**	
2046/S/AS/AK	D	11946	OM 541.948/980		04/03 ▸	0008301883	**815974**	
2048 AS/AK	D	11946	OM 541.948/OM 542.925		04/03 ▸	0008301883	**815974**	
2050 S	D	11946	OM 542.940/941		04/03 ▸	0008301883	**815974**	
2051 AS	D	11946	OM 542.940/960		04/03 ▸	0008301883	**815974**	
MP2 / MP3	D	11946	OM 541.940/970		04/03 ▸	0008302083	**815975**	
MP2 / MP4	D	11946	OM 542.942/962		04/03 ▸	0008301883	**815974**	
2532/2536/2541/2544/2546/L/ LL/LS	D	11946	OM 541.920/22/40/…		04/03 ▸	0008301883	**815974**	
ATEGO								
712/713	D	4229	OM 900.911/917, OM 904.909 OM 904.915		01/98 ▸ 10/04	9700300283	**815973**	
714/K/L	D	4229	OM 904.910/OM 904.916		01/98 ▸ 10/04	9700300283	**815973**	
715-716/L	D	4229	OM 900.912, OM 900.918 OM 904.922		10/04 ▸	9700300283	**815973**	
717/K/L	D	4229	OM 904.911, OM 904.917		01/98 ▸ 10/04	9700300283	**815973**	
812/K, 813	D	4229	OM 900.911, OM 900.917 OM 904.909		10/04 ▸	9700300283	**815973**	
814/L	D	4229	OM 904.910, OM 904.916		01/98 ▸ 10/04	9700300283	**815973**	
815-816-818/K/L	D	4229	OM 900.912/913/918/919/922		10/04 ▸	9700300283	**815973**	
915-916/L	D	4229	OM 900.912/918/922		10/04 ▸	9700300283	**815973**	
917KO	D	4229	OM 904.911		01/98 ▸ 10/04	9700300283	**815973**	
918-1016/K/L	D	4229	OM 900.912/918/919		10/04 ▸	9700300283	**815973**	
1017K/KO	D	4229	OM 900.913, OM 904.911 OM 904.917		01/98 ▸ 10/04	9700300283	**815973**	
1018/A/K/L/KO	D	4229	OM 900.913, OM 904.911 OM 904.917		10/04 ▸	9700300283	**815973**	
1214	D	4229	OM 904.910, OM 904.916		01/98 ▸ 10/04	9700300283	**815973**	
1215/L, 1216/L/K	D	4229	OM 900.912, OM 904.922		10/04 ▸	9700300283	**815973**	
1317KO/LKO	D	4229	OM 900.913, OM 904.911 OM 904.917, OM 904.911		01/98 ▸ 10/04	9700300283	**815973**	
1318A/AK/K/L/KO/LKO	D	4229	OM 900.913		10/04 ▸	9700300283	**815973**	
1518A/K/L	D	4229	OM 900.913		10/04 ▸	9700300283	**815973**	
MG								
MG F								
1.8 i 16V, 1.8 i VVC 16V	E	1796	18K4F, 18K4K		03/95 ▸ 03/02	JRJ100260	**508627**	
MINI								
MINI (2001>)								
1.6 i 16V	E	1598	W10B16A-115, W10B16A-90 W11B16A-163, W11B16A-170	Kit	09/01 ▸	64506917489	**509527**	
MITSUBISHI								
MONTERO								
2.8 TD	D	2835	4M40-0A,4M40-2A		11/93 ▸ 02/00	MB918516	**508805**	

		cc				OE	Valeo	
MITSUBISHI (.../...)								
PAJERO II (91>99)								
2.4 i	E	2351	4G64		12/90 ▸ 05/94	MB657527		
2.6 i	E	2555	4G54-1HL		04/91 ▸ 05/95	MB657527	**508954**	
3.0 i V6	E	2972	6G72-1, 6G72-8H		12/90 ▸ 05/94	MB657527	**508954**	
3.0 i V6	E	2972	6G72-8H		06/94 ▸	MB918516	**508805**	
3.5 i V6	E	3497	6G74		06/97 ▸	MB918516	**508805**	
2.5 D, 2.5 TD	D	2477	4D56, 4D56T-4P, 4D56T-1 4D56T-4, 4D56T-2D, 4D56T-5		12/90 ▸	MB657527	**508954**	
2.5 TD	D	2477	4D56T-4P, 4D56T-5, 4D56T-2D 4D56T-4, 4D56T-1		12/90 ▸	MB918516	**508805**	
2.8 TD	D	2835	4M40-2A		06/97 ▸	MB918516	**508805**	
SPACE RUNNER								
1.8 i	E	1834	4G93, 4G93-0M3		06/91 ▸ 05/93	MB899497	**508954**	
1.8 i	E	1834	4G93-0M3, 4G93		06/93 ▸	MR117107	**508805**	
2.0 i	E	1997	4G63-MPI		05/99 ▸	MR117107	**508805**	
2.4 GDi	E	2351	4G64-414		05/99 ▸	MR117107	**508805**	
2.0 TD	D	1998	4D68T		06/92 ▸ 05/93	MB899497	**508954**	
2.0 TD	D	1998	4D68T		06/93 ▸	MR117107	**508805**	
SPACE WAGON (91>98)								
1.8	E	1834	4G93, 4G93-0M3		05/91 ▸ 05/92	MB899497	**508954**	
2.0	E	1997	4G63-6		06/92 ▸ 05/93	MB899497	**508954**	
2.0	E	1997	4G63-6		06/93 ▸ 11/00	MR117107	**508805**	
2.4	E	2351	4G64		06/92 ▸ 05/93	MB899497	**508954**	
2.4	E	2351	4G64		06/93 ▸ 05/96	MR117107	**508805**	
1.8 TD	D	1795	4D65T		05/91 ▸ 05/92	MB899497	**508954**	
1.8 TD	D	1795	4D65T		06/92 ▸ 05/93	MR117107	**508805**	
2.0 TD	D	1998	4D68T		06/92 ▸ 05/93	MB899497	**508954**	
2.0 TD	D	1998	4D68T		06/93 ▸ 11/00	MR117107	**508805**	
NISSAN								
ALMERA (95>2000)								
1.4 i 16V	E	1392	GA14DE		07/95 ▸ 12/97	921317E220	**508957**	
1.4 i 16V	E	1392	GA14DE		01/98 ▸ 01/00	921312J966	**509948**	
1.6 i 16V	E	1597	GA16DE		07/95 ▸ 12/97	921317E220	**508957**	
1.6 i 16V	E	1597	GA16DE		01/98 ▸ 01/00	921312J966	**509948**	
2.0 i 16V	E	1998	SR20DEB		04/96 ▸ 06/96	921317E220	**508957**	
2.0 i 16V	E	1998	SR20DEB		01/98 ▸ 01/00	921312J966	**509948**	
2.0 D	D	1974	CD20		07/95 ▸ 06/96	921317E220	**508957**	
2.0 D	D	1974	CD20		01/98 ▸ 01/00	921312J966	**509948**	
ALMERA (2000>)								
1.5 i 16V	E	1497	QG15DE		02/00 ▸ 03/01	921304M400	**509709**	
1.5 i 16V	E	1497	QG15DE	Kit	08/02 ▸	92131BM405	**509928**	
1.8 i 16V	E	1769	QG18DE		02/00 ▸ 03/01	921304M400	**509709**	
1.8 i 16V	E	1769	QG18DE	Kit	08/02 ▸	92131BM405	**509928**	
1.5 dCi	D	1461	K9K.7	Kit	09/02 ▸	92131BV000	**509927**	
ALMERA TINO (2000>2003)								
1.8 i 16V	E	1769	QG18DE		08/00 ▸ 05/01	921304M400	**509709**	
1.8 i 16V	E	1769	QG18DE	Kit	03/02 ▸	92131BM405	**509928**	
2.0 i 16V	E	1998	SR20DE		08/00 ▸ 05/01	921304M400	**509709**	
2.0 i 16V	E	1998	SR20DE	Kit	03/02 ▸ 01/03	92131BM405	**509928**	
ALMERA TINO (2003>2005)								
2.2 DCi 16V	D	2184	YD22DDTI	Kit	02/03 ▸ 11/05	92131BV000	**509927**	

• **New** Nouveau **Neu** Nuevo **Novo** Nuovo **Nieuw** Nowi **Новый** Novy **Nou** Yeni **Νέους**

		CC				OE	Valeo	
NISSAN (.../...)								
MAXIMA (J30)								
3.0	E	2960	VG30E		10/91 ▸ 09/94	9213196E00	**508957**	
MICRA (K12) (2003>)								
1.2 i 16V	E	1240	CG12DE	Kit	01/03 ▸ 05/05	92131BV000	**509927**	
1.4 i 16V	E	1386	CGA3DE	Kit	01/03 ▸ 05/05	92131BV000	**509927**	
1.0 i 16V	E	998	CG10DE	Kit	01/03 ▸ 05/05	92131BV000	**509927**	
1.5 dCi	D	1461	K9K.7	Kit	01/03 ▸ 05/05	92131BV000	**509927**	
PRIMERA (P10) (90>96)								
2.0, 2.0 e, 2.0 i	E	1998	SR20DEC		12/95 ▸ 05/96	921317E220	**508957**	
PRIMERA (P11) (96>2001)								
1.6 i 16V	E	1597	GA16DEF, GA16DEB		06/96 ▸ 02/02	921312F000	**509947**	
2.0 i 16V	E	1998	SR20DEF, SR20DE		06/96 ▸ 02/02	921312F000	**509947**	
2.0 TD	D	1974	CD20T		06/96 ▸ 02/02	921312F600	**509947**	
PRIMERA (P12) (2001>)								
1.9 dCi	D	1870	F9Q	Kit	01/03 ▸ 2006	92131BV000	**509927**	
2.2 VDi 16V,2.2 dCi 16V	D	2184	YD22DDT	Kit	05/02 ▸ 2006	92131BV000	**509927**	
PRIMERA BREAK (W10) (90>98)								
1.6	E	1597	GA16DEC		12/95 ▸ 05/96	921317E220	**508957**	
NISSAN								
INTERSTAR								
1.9 dCi	D	1870	F9Q.7.72		09/02 ▸ 09/06	2764000QAA	**509957**	
2.2 dCi	D	2188	G9T.7.22		09/02 ▸ 09/06	2764000QAA	**509957**	
2.5 dCi	D	2464	G9U.7.20,G9U.7.50		09/02 ▸ 09/06	2764000QAA	**509957**	
3.0 dCi	D	2953	ZD3-136		11/03 ▸ 09/06	2764000QAA	**509957**	
INTERSTAR II (2006>)								
2.5 dCi	D	2464	G9U.6.30,G9U.7.20,G9U.7.50		10/06 ▸	2764000QAA	**509957**	
OPEL								
ASTRA F (91>98)								
1.4 i, 1.4 i 16V	E	1389	14SE, X14XE, C14SE		03/91 ▸ 01/98	1618013	**508740**	
1.6 i, 1.6 i 16V	E	1598	C16NZ/SE, X16SZR/XEL		09/91 ▸ 01/98	1618013	**508740**	
1.8 i	E	1796	C18NZ		09/91 ▸ 01/98	1618013	**508740**	
1.8 i 16V	E	1799	X18XE, C18XE, C18XEL		07/93 ▸ 01/98	1618013	**508740**	
2.0 i, 2.0 i 16V	E	1998	X20XEV, C20NE, C20XE		09/91 ▸ 01/98	1618013	**508740**	
ASTRA G (98>)								
1.2 i 16V ▸ 12999999	E	1199	X12XE, Z12XE		02/98 ▸ 12/01	1618150	**509400**	
1.2 i 16V 2200001 ▸	E	1199	Z12XE		01/02 ▸	1618242	**509691**	
1.4 i 16V ▸ 12999999	E	1389	X14XE, Z14XE		02/98 ▸ 12/01	1618150	**509400**	
1.4 i 16V 2200001 ▸	E	1389	Z14XE		01/02 ▸	1618242	**509691**	
1.6 i, 1.6 i 16V **1.6 i Twinport 16V** ▸ 12999999	E	1598	Z16XEP(103), X16XEL Z16SE/E4, Z16XE, X16SZR		02/98 ▸ 12/01	1618150	**509400**	

		cc				OE	Valeo	
OPEL (.../...)								
ASTRA G (98>) (.../...)								
1.6 i, 1.6 i 16V **1.6 i Twinport 16V** ▸ 22000001	E	1598	Z16XEP(103), C16SEL, Z16XE Z16SE/E4		01/02 ▸	1618242	**509691**	
1.8 i 16V ▸ 12999999	E	1796	X18XE1, Z18XE, Z18XEL		02/98 ▸ 12/01	1618150	**509400**	
1.8 i 16V ▸ 22000001	E	1796	Z18XE, Z18XEL		01/02 ▸	1618242	**509691**	
2.0 i 16V, 2.0 i Turbo 16V	E	1998	X20XEV, Z20LER-200 Z20LET-192, Z20LET-190		02/98 ▸	1618150	**509400**	
2.2 i 16V ▸ 12999999	E	2198	Z22SE		10/99 ▸ 12/01	1618150	**509400**	
2.2 i 16V ▸ 22000001	E	2198	Z22SE		01/02 ▸	1618242	**509691**	
1.7 CDTI, 1.7 DTi 16V, 1.7 TD **1.7 TD Ecoturbo**	D	1686	Y17DT, Z17DTL, X17DTL		02/98 ▸	1618150	**509400**	
2.0 Di 16V ▸ 22000001	D	1995	Y20DTL		01/02 ▸	1618242	**509691**	
2.0 DTi 16V, 2.0 Di 16V	D	1995	Y20DTH, X20DTL, Y20DTL		02/98 ▸	1618150	**509400**	
2.2 DTI 16V	D	2171	Y22DTR		03/01 ▸	1618150	**509400**	
ASTRA H (2004>)								
1.2 i Twinport 16V	E	1229	Z12XEP		03/04 ▸	1618308	**509949**	
1.4 i Twinport 16V	E	1364	Z14XEP, Z14XEL		03/04 ▸	1618308	**509949**	
1.6 i 16V, 1.6 i Turbo 16V **1.6 i Twinport 16V**	E	1598	Z16XEP, Z16LET		03/04 ▸	1618308	**509949**	
1.8 i 16V	E	1796	Z18XER, Z18XE		03/04 ▸	1618308	**509949**	
2.0 i Turbo 16V	E	1998	Z20LEL, Z20LER, Z20LEH		03/04 ▸	1618308	**509949**	
1.3 CDTI 16V	D	1248	Z13DTH		08/05 ▸	1618308	**509949**	
1.7 CDTI, 1.7 CDTI 16V	D	1686	Z17DTR, Z17DTH, Z17DTL		03/04 ▸	1618308	**509949**	
1.9 CDTI, 1.9 CDTI 16V	D	1910	Z19DT, Z19DTJ, Z19DTH Z19DTL		07/04 ▸	1618308	**509949**	
CALIBRA								
2.0 i, 2.0 i 16S ▸ R1000001	E	1998	C20XE, X20XEV, C20NE		07/93 ▸ 07/97	1618016	**508739**	
2.5 i V6, 2.5 i V6 24V	E	2498	C25XE, X25XE-170		05/93 ▸ 07/97	1618016	**508739**	
CORSA B (93>2000)								
1.0 i 12V	E	973	X10XE		03/97 ▸ 08/00	1618016	**508739**	
1.2, 1.2 i	E	1195	X12SZ, C12NZ, 12NZ		03/93 ▸ 08/00	1618016	**508739**	
1.2 i 16V	E	1199	X12XE		03/98 ▸ 08/00	1618016	**508739**	
1.4 i, 1.4 i 16V	E	1389	C14SE, C14NZ, X14XE, X14SZ		03/93 ▸ 08/00	1618016	**508739**	
1.6 i 16V	E	1598	C16XE		03/93 ▸ 08/00	1618016	**508739**	
1.5 D, 1.5 TD	D	1488	15TD, 15D		03/93 ▸ 08/00	1618016	**508739**	
1.7 D	D	1686	X17D		07/95 ▸ 08/00	1618016	**508739**	
1.7 D	D	1699	17DA		03/93 ▸ 08/00	1618016	**508739**	
CORSA C (2000>2003)								
1.0 i 12V	E	973	Z10XE		09/00 ▸ 08/03	1848000	**509591**	
1.2 i 16V	E	1199	Z12XE		09/00 ▸ 08/03	1848000	**509591**	
1.2 i 16V	E	1199	Z12XE		09/00 ▸ 08/04	1618304	**509929**	
1.4 i 16V	E	1389	Z14XE		09/00 ▸ 08/03	1848000	**509591**	
1.8 i 16V	E	1796	Z18XE		09/00 ▸ 08/03	1848000	**509591**	
1.7 DI 16V, 1.7 DTi 16V	D	1686	Y17DTL, Y17DT		09/00 ▸ 08/03	1848000	**509591**	
1.7 DI 16V, 1.7 DTi 16V	D	1686	Y17DT, Y17DTL		09/00 ▸ 08/03	1618304	**509929**	
CORSA C (2003>)								
1.0 i Twinport 12V	E	998	Z10XEP		09/03 ▸	1618304	**509929**	

		CC				OE	Valeo	
							OPEL (.../...)	
CORSA C (2003>) (.../...)								
1.2 i Twinport 16V	E	1229	Z12XEP		09/04 ▸	1618304	**509929**	
1.4 i Twinport 16V	E	1364	Z14XEP		09/03 ▸	1618304	**509929**	
1.8 16V	E	1796	Z18XE		09/03 ▸	1618304	**509929**	
1.3 CDTI 16V	D	1248	Z13DT		09/03 ▸	1618304	**509929**	
1.7 DI 16V, 1.7 DTi 16V	D	1686	Y17DTL, Y17DT		09/03 ▸	1848000	**509591**	
1.7 CDTI 16V	D	1686	Z17DTH		09/03 ▸	1618304	**509929**	
FRONTERA (91>98)								
2.0 i SV720103 ▸ TV899999	E	1998	X20SE	+1	04/95 ▸	1848027	**508625**	
2.2 i 16V SV720103 ▸ TV899999	E	2198	X22XE	+1	04/95 ▸	1848027	**508625**	
2.8 TDi SV720103 ▸	D	2771	4JB1-TC	+1	05/95 ▸ 07/96	1848027	**508625**	
MERIVA								
1.4 i Twinport 16V	E	1364	Z14XEP		09/04 ▸	1848049	**509951**	
1.6 i 16V	E	1598	Z16XE, Z16XEP		05/03 ▸	1848049	**509951**	
1.8 i 16V	E	1796	Z18XE		05/03 ▸	1848049	**509951**	
1.3 CDTi	D	1248	Y13DT, Z13DT		08/03 ▸	1848049	**509951**	
1.7 CDTi 16V	D	1686	Z17DTH		08/03 ▸	1848049	**509951**	
OMEGA A (86>94)								
1.8, 1.8 i	E	1796	18SV, E18NVR, 18SEH		10/86 ▸ 02/94	1848032	**508914**	
2.0 i	E	1998	20SE, C20NE		10/86 ▸ 02/94	1848032	**508914**	
2.4 i	E	2410	C24NE		10/88 ▸ 07/91	1848032	**508914**	
2.6 i	E	2594	C26NE		08/90 ▸ 02/94	1848032	**508914**	
3000 i, 3000 i 24V	E	2968	C30SE, C30LE, C30NE, 30NE		02/87 ▸ 02/94	1848032	**508914**	
3.6 i Lotus	E	3615	C36GET		04/90 ▸ 02/94	1848032	**508914**	
2.3 D, 2.3 TD	D	2260	23YD, 23YDT, 23DTR		10/86 ▸ 02/94	1848032	**508914**	
OMEGA B (94>)								
2.0 i, 2.0 i 16V	E	1998	20SE, X20SE, X20XEV		02/94 ▸ 07/03	1618010	**509565**	
2.2 i 16V	E	2198	Z22XE		08/99 ▸ 07/03	1618010	**509565**	
2.5 i V6 24V	E	2498	X25XE-170		02/94 ▸ 07/03	1618010	**509565**	
2.6 i V6 24V	E	2597	Y26SE		09/00 ▸ 07/03	1618010	**509565**	
3.0 i V6 24V	E	2962	X30XE		02/94 ▸ 07/03	1618010	**509565**	
3.2 i V6 24V	E	3175	Y32SE		09/00 ▸ 07/03	1618010	**509565**	
2.2 DTi 16V	D	2171	Y22DTH(120)		09/00 ▸ 07/03	1618010	**509565**	
2.5 TD	D	2497	U25TD, X25TD		02/94 ▸ 07/03	1618010	**509565**	
SENATOR B (87>93)								
2.5 i	E	2490	25NE		02/87 ▸ 08/90	1848032	**508914**	
2.6 i	E	2594	C26NE		08/90 ▸ 06/93	1848032	**508914**	
3.0 i, 3.0 i 24V	E	2968	C30SE, C30LE, C30NE, 30NE		02/87 ▸ 06/93	1848032	**508914**	
SIGNUM								
1.8 i 16V	E	1796	Z18XE		06/03 ▸	1848044	**509692**	
2.2 DIG 16V	E	2198	Z22YH		06/03 ▸	1848044	**509692**	
3.2 i V6 24V	E	3175	Z32SE		06/03 ▸	1848044	**509692**	
2.0 DTi 16V	D	1995	Y20DTH		06/03 ▸	1848045	**509693**	
2.2 DTI 16V	D	2171	Y22DTR		06/03 ▸	1848045	**509693**	
TIGRA (94>2003)								
1.4 i 16V	E	1389	X14XE		10/94 ▸ 01/01	1618016	**508739**	
1.6 i 16V	E	1598	X16XE		10/94 ▸ 01/01	1618016	**508739**	

		CC				OE	Valeo	
OPEL (.../...)								
TIGRA TWINTOP (2004>)								
1.4 i Twinport 16V	E	1364	Z14XEP		07/04 ▸	1618304	**509929**	
1.8 i 16V	E	1796	Z18XE		07/04 ▸	1618304	**509929**	
1.3 CDTi 16V	D	1248	Z13DT		07/04 ▸	1618304	**509929**	
VECTRA A (88>95)								
2.0 i, 2.0 i 16V, 2000 i 16V	E	1998	X20XEV, C20NE, C20XE, 20XE		07/93 ▸ 09/95	1618016	**508739**	
2.5 i V6 24V	E	2498	C25XE		05/93 ▸ 09/95	1618016	**508739**	
VECTRA B (95>99)								
1.6 i, 1.6 i 16V	E	1598	X16SZR, X16XEL, 16LZ2		10/95 ▸ 01/99	1618193	**509564**	
1.8 i 16V	E	1799	X18XE		10/95 ▸ 01/99	1618193	**509564**	
2.0 i, 2.0 i 16V	E	1998	X20XEV, 20NEJ		10/95 ▸ 01/99	1618193	**509564**	
2.5 i V6 24V	E	2498	X25XE-170		10/95 ▸ 01/99	1618193	**509564**	
1.7 TD	D	1686	X17DT		10/95 ▸ 01/99	1618193	**509564**	
2.0 Di 16V	D	1995	X20DTL		10/96 ▸ 01/99	1618193	**509564**	
2.0 TDi 16V	D	1995	X20DTH		09/97 ▸ 01/99	1618051	**509563**	
VECTRA B (99>2002)								
1.6 i 16V	E	1598	Z16XE		02/99 ▸ 03/02	1618193	**509564**	
1.8 i 16V	E	1796	Z18XE		02/99 ▸ 03/02	1618193	**509564**	
2.2 i 16V	E	2198	Z22SE		02/99 ▸ 03/02	1618193	**509564**	
2.6 i V6 24V	E	2597	Y26SE		09/00 ▸ 03/02	1618193	**509564**	
2.0 DTi 16V	D	1995	Y20DTH		02/99 ▸ 03/02	1618051	**509563**	
2.2 DTI 16V	D	2171	Y22DTR		09/00 ▸ 03/02	1618051	**509563**	
VECTRA C (2002>)								
1.6 i 16V	E	1598	Z16XE		04/02 ▸	1848044	**509692**	
1.8 i 16V	E	1796	Z18XE, Z18XEL-110, Z18XER		04/02 ▸	1848044	**509692**	
2.2 i 16V, 2.2 DIG 16V	E	2198	Z22SE, Z22YH		04/02 ▸	1848044	**509692**	
3.2 i V6 24V	E	3175	Z32SE		06/02 ▸	1848044	**509692**	
2.0 DTi 16V	D	1995	Y20DTH		04/02 ▸ 03/05	1848045	**509693**	
2.2 DTI 16V	D	2171	Y22DTR		04/02 ▸	1848045	**509693**	
ZAFIRA (98>2003)								
1.6 i 16V ▸12999999	E	1598	Z16XE, X16XEL, Z16XE/D3		01/99 ▸ 06/02	1618150	**509400**	
1.6 i 16V 22000001▸	E	1598	Z16XE/D3, Z16XE, X16XEL		07/02 ▸ 06/03	1618242	**509691**	
1.8 i 16V ▸12999999	E	1796	X18XE1, Z18XE		01/99 ▸ 06/02	1618150	**509400**	
1.8 i 16V 22000001▸	E	1796	X18XE1, Z18XE		07/02 ▸ 06/03	1618242	**509691**	
2.2 i 16V ▸12999999	E	2198	Z22SE		01/99 ▸ 06/02	1618150	**509400**	
2.2 i 16V 22000001▸	E	2198	Z22SE		07/02 ▸ 06/03	1618242	**509691**	
2.0 DT 16V, 2.0 DTi 16V ▸12999999	D	1995	Y20DTH, X20DTL, Y20DTL		01/99 ▸ 06/02	1618150	**509400**	
2.0 DT 16V, 2.0 DTI 16V 22000001▸	D	1995	X20DTL, Y20DTL, Y20DTH		07/02 ▸ 06/03	1618242	**509691**	
ZAFIRA (2003>)								
1.6 i 16V, 1.6 i 16V 16V	E	1598	Z16XE/D4, Z16XE		07/03 ▸ 06/05	1618242	**509691**	
1.8 i 16V	E	1796	Z18XE		07/03 ▸ 06/05	1618242	**509691**	
2.0 i Turbo 16V	E	1998	Z20LET		07/03 ▸ 06/05	1618150	**509400**	
2.2 i 16V	E	2198	Z22SE		07/03 ▸ 06/05	1618242	**509691**	
2.0 DTI 16V, 2.0 DTI 16V 16V	D	1995	Y20DTL		07/03 ▸ 06/05	1618242	**509691**	

		CC				OE	Valeo	
OPEL (.../...)								
ZAFIRA (2003>) (.../...)								
2.2 DTI 16V 16V	D	2171	Y22DTR		07/03 ▸ 06/05	1618150	**509400**	
ZAFIRA II (2005>)								
1.6 GNV 16V	F	1598	Z16YNG		01/06 ▸	1618308	**509949**	
1.6 i 16V, 1.6 i VVT 16V	E	1598	Z16XEP		07/05 ▸	1618308	**509949**	
1.8 i 16V	E	1796	Z18XER		09/05 ▸	1618308	**509949**	
2.0 i Turbo 16V	E	1998	Z20LEH, Z20LER		07/05 ▸	1618308	**509949**	
2.2 i 16V	E	2198	Z22YH		07/05 ▸	1618308	**509949**	
1.7 CDTI 16V	D	1686	A17DTR/F		12/07 ▸ 07/08	1618308	**509949**	
1.9 CDTI, 1.9 CDTI 16V	D	1910	Z19DTL, Z19DTH, Z19DT		07/05 ▸	1618308	**509949**	
OPEL								
COMBO (93>2001)								
1.2, 1.2 i	E	1195	12NZ, X12SZ, C12NZ		03/93 ▸ 09/01	1618016	**508739**	
1.4 i	E	1389	X14SZ, C14NZ, C14SE		03/93 ▸ 09/01	1618016	**508739**	
1.7 D	D	1686	X17D		07/95 ▸ 09/01	1618016	**508739**	
1.7 D	D	1699	17DA		03/93 ▸ 09/01	1618016	**508739**	
COMBO (2001>)								
1.6	E	1598	Z16SE		10/01 ▸	1848000	**509591**	
VIVARO (2001>2006)								
2.0 i 16V	E	1998	F4R.7.20		05/01 ▸ 07/06	4408038	**509957**	
1.9 DI, 1.9 DTI	D	1870	F9Q.7.60,F9Q.7.62		05/01 ▸ 07/06	4408038	**509957**	
2.5 DTI	D	2464	G9U.7.30		05/03 ▸ 07/06	4408038	**509957**	
VIVARO (2006>)								
2.0 i 16V ▸ 6Y6999999	E	1998	F4R-820		07/06 ▸ 12/06	4408038	**509957**	
2.0 CDTI ▸ 6Y6999999	D	1995	M9R.7.80		07/06 ▸ 12/06	4408038	**509957**	
2.5 CDTI ▸ 6Y6999999	D	2464	G9U.6.30		07/06 ▸ 12/06	4408038	**509957**	
PEUGEOT								
106 (96>2003)								
1.0 i ▸ 8575	E	954	TU9M		03/96 ▸ 05/00	6455V6	**508874**	
1.1, 1.1 i, 1.1 i GPL ▸ 8575	E	1124	TU1M+, TU1TR		03/96 ▸ 05/00	6455V6	**508874**	
1.4, 1.4 i ▸ 8575	E	1360	TU3JP, TU3.2		03/96 ▸ 05/00	6455V6	**508874**	
1.6 i, 1.6 i 16V ▸ 8575	E	1587	TU5JP, TU5J4, TU5J2		03/96 ▸ 05/00	6455V6	**508874**	
1.5 D ▸ 8575	D	1527	TUD5, TUD5B		03/96 ▸ 05/00	6455V6	**508874**	
205								
1.0	E	954	XV8		08/87 ▸ 07/88	6455R9	**508603**	
1.0, 1.0 i	E	954	TU9, TU9M		08/87 ▸ 09/98	6455S0	**508737**	
1.1	E	1118	E1		08/87 ▸ 07/88	6455S0	**508737**	
1.1	E	1124	XW7		02/83 ▸ 07/88	6455R9	**508603**	
1.1, 1.1 i	E	1124	TU1M, TU1, TU1TR, F1		08/87 ▸ 09/98	6455S0	**508737**	
1.3	E	1294	G1A, G1, TU24		08/87 ▸ 06/93	6455S0	**508737**	
1.4	E	1360	XY7, XY8, XY7CP		02/83 ▸ 12/94	6455R9	**508603**	
1.4, 1.4 i	E	1360	TU3M/S, TU3A/1, TU3.2		08/87 ▸ 09/98	6455S0	**508737**	

		CC				OE	Valeo	
PEUGEOT (.../...)								
205 (.../...)								
1.4	E	1442	Y2		07/84 ▸ 07/87	6455S0	**508737**	
1.6, 1.6 i	E	1580	XU5M, XU5J/A/1, XU51C/52C		02/83 ▸ 09/98	6455R9	**508603**	
1.6	E	1592	J2		07/89 ▸ 06/93	6455S0	**508737**	
1.9 i	E	1905	XU9JA, XU9JAZ, XU9J1		02/83 ▸ 09/98	6455R9	**508603**	
1.7 D, 1.7 TD	D	1769	XUD7, XUD7T		08/83 ▸ 09/98	6455R9	**508603**	
1.9 D	D	1905	XUD9		08/89 ▸ 09/98	6455R9	**508603**	
206								
1.1 i	E	1124	TU1JP		09/98 ▸	6455W8	**509403**	
1.4 i	E	1360	TU3JP		09/98 ▸	6455W8	**509403**	
1.6 i, 1.6 i 16V	E	1587	TU5JP4, TU5JP		09/98 ▸	6455W8	**509403**	
2.0 i 16V	E	1997	EW10J4, EW10J4S		04/99 ▸	6455W8	**509403**	
1.4 HDi	D	1398	DV4TD		09/01 ▸	6455W8	**509403**	
1.6 HDi	D	1560	DV6TED4		04/04 ▸	6455W8	**509403**	
1.9 D	D	1868	DW8		09/98 ▸	6455W8	**509403**	
2.0 HDi	D	1997	DW10TD		09/99 ▸	6455W8	**509403**	
206 CC								
1.6 i 16V	E	1587	TU5JP4		02/01 ▸	6455W8	**509403**	
2.0 i 16V	E	1997	EW10J4		10/00 ▸	6455W8	**509403**	
1.6 HDi	D	1560	DV6TED4		04/05 ▸	6455W8	**509403**	
206 SW								
1.1 i	E	1124	TU1JP		05/02 ▸	6455W8	**509403**	
1.4 i	E	1360	TU3JP		05/02 ▸	6455W8	**509403**	
1.6 i 16V	E	1587	TU5JP4		05/02 ▸	6455W8	**509403**	
2.0 i 16V	E	1997	EW10J4		05/02 ▸	6455W8	**509403**	
1.4 HDi	D	1398	DV4TD		05/02 ▸	6455W8	**509403**	
1.6 HDi	D	1560	DV6TED4		04/04 ▸	6455W8	**509403**	
2.0 HDi	D	1997	DW10TD		05/02 ▸	6455W8	**509403**	
305								
1.1	E	1127	XK5		11/77 ▸ 02/88	6455S0	**508737**	
1.3	E	1290	XL5		11/77 ▸ 06/90	6455S0	**508737**	
1.5	E	1472	XR5, XR5A, XR5S		11/77 ▸ 06/90	6455S0	**508737**	
306 (93>97)								
1.1 i	E	1124	TU1M+, TU1M		02/93 ▸ 02/97	6455P8	**508738**	
1.4, 1.4 i	E	1360	TU3, TU3MC, TU3.2, TU3JP		02/93 ▸ 02/97	6455P8	**508738**	
1.6 i	E	1587	TU5JP		02/93 ▸ 02/97	6455P8	**508738**	
1.8 i	E	1761	XU7JP		02/93 ▸ 02/97	6455P8	**508738**	
2.0 i, 2.0 i 16V	E	1998	XU10J4/R, XU10J2/C,XU10J4RS		06/93 ▸ 02/97	6455P8	**508738**	
1.8 D	D	1769	XUD7		06/93 ▸ 02/97	6455P8	**508738**	
1.9 D, 1.9 TD	D	1905	XUD9A, XUD9TE, XUD9		06/93 ▸ 02/97	6455P8	**508738**	
306 (97>)								
1.4, 1.4 i, 1.4 i GPL	E	1360	TU3JP, TU3.2		03/97 ▸ 03/02	6455X8	**508873**	
1.6 i	E	1587	TU5JP, TU5JP+		03/97 ▸ 09/02	6455X8	**508873**	
1.8 i, 1.8 i 16V, 1.8 i GPL 16V	E	1761	XU7JP4, XU7JP		03/97 ▸ 09/02	6455X8	**508873**	
2.0 i 16V	E	1998	XU10J4R, XU10J4RS		03/97 ▸ 09/02	6455X8	**508873**	
1.8 D	D	1769	XUD7		03/97 ▸ 02/02	6455X8	**508873**	
1.9 D	D	1868	DW8, DW8B		11/98 ▸ 03/02	6455X8	**508873**	
1.9 D, 1.9 SD, 1.9 TD	D	1905	XUD9BSD, XUD9TE, XUD9A		03/97 ▸ 03/02	6455X8	**508873**	
2.0 HDi	D	1997	DW10TD		03/99 ▸ 03/02	6455X8	**508873**	
307 (2001>2005)								
1.4 i	E	1360	TU3JP	Kit	09/01 ▸ 05/05	6455AJ	**509525**	

		CC				OE	Valeo	

PEUGEOT (.../...)

307 (2001>2005) (.../...)

1.6 i, 1.6 i 16V	E	1587	TU5JP4	Kit	03/01 ▸ 05/05	6455AJ	**509525**	
2.0 i 16V	E	1997	EW10J4S, EW10J4	Kit	03/01 ▸ 05/05	6455AJ	**509525**	
1.4 HDi	D	1399	DV4TD	Kit	02/02 ▸ 05/05	6455AJ	**509525**	
2.0 HDi	D	1997	DW10TD, DW10ATED	Kit	03/01 ▸ 05/05	6455AJ	**509525**	

309 (89>94)

1.1, 1.1 i	E	1124	TU1, TU1M		08/89 ▸ 08/93	6455R9	**508603**	
1.4, 1.4 i	E	1360	TU3F2, TU3A, TU3M, TU3 TU3S		08/89 ▸ 08/94	6455R9	**508603**	
1.6, 1.6 i	E	1580	XU5JA, XU52C, XU5M		08/89 ▸ 08/93	6455R9	**508603**	
1.6	E	1592	J2		08/89 ▸ 07/92	6455R9	**508603**	
1.9, 1.9 i, 1.9 i 16S	E	1905	XU92C, XU9JA/1, XU9J4, XU9M		08/89 ▸ 08/93	6455R9	**508603**	
1.7 D, 1.7 TD	D	1769	XUD7T, XUD7		08/89 ▸ 08/94	6455R9	**508603**	
1.9 D	D	1905	XUD9		08/89 ▸ 08/93	6455R9	**508603**	

405 (87>92)

1.4	E	1360	TU3A, TU3.2, TU3, TU3&3A		06/87 ▸ 06/92	6453Q5	**508834**	
1.6, 1.6 i	E	1580	XU5M, XU52C, XU51C, XU5CP		06/87 ▸ 06/92	6453Q5	**508834**	
1.9, 1.9 i	E	1905	XU92C, XU9J2, XU9J1, XU9J1A XU9JAZ, XU9J4, XU9M		06/87 ▸ 06/92	6453Q5	**508834**	
1.7 D, 1.7 TD	D	1769	XUD7, XUD7TE		06/87 ▸ 06/92	6453Q5	**508834**	
1.9 D	D	1905	XUD9A		06/87 ▸ 06/92	6453Q5	**508834**	

405 (92>96)

1.4, 1.4 i	E	1360	TU3MC, TU3M, TU3.2		07/92 ▸ 10/96	6453Q5	**508834**	
1.6, 1.6 i	E	1580	XU5M, XU5JP, XU52C		07/92 ▸ 10/96	6453Q5	**508834**	
1.8 i	E	1761	XU7JP, XU7JPPR		07/92 ▸ 10/96	6453Q5	**508834**	
1.9, 1.9 i	E	1905	XU92C, XU9J2		07/92 ▸ 10/96	6453Q5	**508834**	
2.0 i, 2.0 i Turbo 16S	E	1998	XU10J4TE, XU10J2/C, XU10J4		07/92 ▸ 10/96	6453Q5	**508834**	
1.7 TD	D	1769	XUD7TE		07/93 ▸ 10/95	6453Q5	**508834**	
1.9 D, 1.9 TD	D	1905	XUD9TE, XUD9A		07/92 ▸ 10/96	6453Q5	**508834**	

406 (95>99)

1.6 i	E	1580	XU5JP		10/95 ▸ 03/99	6453V1	**508872**	
1.8 i, 1.8 i 16V, 1.8 i GPL 16V	E	1761	XU7JP4, XU7JB, XU7JP		10/95 ▸ 04/99	6453V1	**508872**	
2.0 i 16V ▸ 9001	E	1997	EW10J4		05/99 ▸ 04/99	6453V1	**508872**	
2.0 i 16V, 2.0 i Turbo	E	1998	XU10J4R, XU10J2TE		10/95 ▸ 04/99	6453V1	**508872**	
3.0 i V6 24V	E	2946	ES9J4, ES9J4S		10/96 ▸ 04/99	6453V1	**508872**	
1.9 TD	D	1905	XUD9TE, XUD9BTF, XUD9SD XUD9BSD		11/95 ▸ 03/99	6453V1	**508872**	
2.0 HDi	D	1997	DW10ATED		10/98 ▸ 03/99	6453V1	**508872**	
2.1 TD	D	2088	XUD11BTE		11/95 ▸ 03/99	6453V1	**508872**	

406 (99>)

1.6 i	E	1580	XU5JP		04/99 ▸ 03/04	6455AH	**509791**	
1.8 i 16V, 1.8 i GPL 16V	E	1749	EW7J4		10/00 ▸ 04/04	6455AH	**509791**	
1.8 i, 1.8 i 16V, 1.8 i GPL 16V	E	1761	XU7JP4, XU7JB, XU7JP		04/99 ▸ 04/04	6455AH	**509791**	
2.0 16V, 2.0 HPi 16V, 2.0 i 16V	E	1997	EW10D, EW10J4		04/99 ▸ 10/04	6455AH	**509791**	
2.0 i 16V	E	1998	XU10J4R		04/99 ▸ 04/04	6455AH	**509791**	
2.2 i 16V	E	2230	EW12J4		05/00 ▸ 10/04	6455AH	**509791**	
3.0 24V, 3.0 i V6 24V	E	2946	ES9J4, ES9J4S		04/99 ▸ 10/04	6455AH	**509791**	
2.0 HDi	D	1997	DW10ATED, DW10TD		04/99 ▸ 04/04	6455AH	**509791**	
2.2 HDI, 2.2 HDi 16V	D	2179	DW12TED4		10/00 ▸ 10/04	6455AH	**509791**	

504

1.6	E	1618	XC7		08/79 ▸ 07/85	6455S0	**508737**	

Multi-product Crosslist on section 1 Cross List Multi-produits, Section 1 **Crossliste siehe Kapitel 1** Crosslist Multiproducto en la sección 1
Lista Multi-produto na secção 1 Cross-list Multi prodotto nella sezione 1 **Rubriek 1 : Cross list "alle produkten"** Kombinovaný převodník v sekci 1
Crosslist multi-produse, secţie 1 Çoklu ürün çapraz listesi bölüm 1 τεdir Αντιστοιχίες προϊόντων στο κεφάλαιο 1

		cc				OE	Valeo	
PEUGEOT (.../...)								
504 (.../...)								
1.8 3503663 ▸	E	1796	XM7		07/80 ▸ 09/93	6455S0	**508737**	
2.0	E	1971	XN1		08/81 ▸ 07/85	6455S0	**508737**	
1.9 D 3503663 ▸	D	1948	XD88		08/79 ▸ 07/85	6455S0	**508737**	
2.1 D 3503663 ▸	D	2112	XD90, XD4		08/71 ▸ 07/85	6455S0	**508737**	
2.3 D 3503663 ▸	D	2304	XD2		08/81 ▸ 09/93	6455S0	**508737**	
2.5 D	D	2498	XD3		08/85 ▸ 09/93	6455S0	**508737**	
505								
1.8	E	1796	XM7A, XM7		08/82 ▸ 07/88	6455S0	**508737**	
2.0	E	1971	XN1A, XN1		07/81 ▸ 01/90	6455S0	**508737**	
2.0 i	E	1995	ZEJ, ZEJK		08/85 ▸ 01/90	6455S0	**508737**	
2.2 T, 2.2 Turbo inject	E	2155	N9T		08/82 ▸ 07/88	6455S0	**508737**	
2.2 i	E	2165	ZDJL		08/85 ▸ 01/90	6455S0	**508737**	
2.3 D, 2.3 TD	D	2304	XD2, XD2S		08/79 ▸ 07/85	6455S0	**508737**	
2.5 D, 2.5 TD	D	2498	XD3TE, XD3, XD3T		08/79 ▸ 01/90	6455S0	**508737**	
604								
2.0 i	E	1971	XN6		1981 ▸ 1984	6455H5	**508737**	
605 (89>94)								
2.0, 2.0 i, 2.0 i Turbo	E	1998	XU10J2, XU102C, XU102C TR XU10J2TE, XU10M		10/89 ▸ 06/94	6453Z0	**508840**	
3.0 i V6, 3.0 i V6 24V	E	2963	ZPJ4, ZPJ		09/93 ▸ 06/94	6453Z0	**508840**	
3.0 i V6, 3.0 i V6 24V	E	2975	ZPJ, ZPJ4		10/89 ▸ 06/94	6453Z0	**508840**	
2.1 TD Turbo	D	2088	XUD11ATE, XUD11BTE		04/90 ▸ 06/94	6453Z0	**508840**	
2.1 D	D	2138	XUD11A		09/90 ▸ 06/94	6453Z0	**508840**	
605 (94>99)								
2.0, 2.0 i, 2.0 i 16V 2.0 i Turbo	E	1998	XU10J2CL3/TE/TR, XU10J2/4R		07/94 ▸ 05/99	6453Z0	**508840**	
3.0 i V6 24V	E	2946	ES9J4		06/97 ▸ 05/99	6453Z0	**508840**	
3.0 i V6, 3.0 i V6 24V	E	2963	ZPJ, ZPJ4		07/94 ▸ 06/97	6453Z0	**508840**	
2.1 TD Turbo	D	2088	XUD11BTE, XUD11ATE		07/94 ▸ 05/99	6453Z0	**508840**	
2.5 TD	D	2446	DK5ATE		07/94 ▸ 05/99	6455S0	**508737**	
607 (2000>2004)								
2.0 i 16V	E	1997	EW10J4		05/00 ▸ 09/04	6455AH	**509791**	
2.2 i 16V	E	2230	EW12J4		05/00 ▸ 09/04	6455AH	**509791**	
3.0 i V6 24V	E	2946	ES9J4S		05/00 ▸ 09/04	6455AH	**509791**	
2.0 HDi	D	1997	DW10ATED		05/00 ▸ 09/04	6455AH	**509791**	
2.2 HDi 16V	D	2179	DW12TED4		05/00 ▸ 09/04	6455AH	**509791**	
607 (2004>)								
2.2 i 16V	E	2230	EW12J4		10/04 ▸	6455AH	**509791**	
3.0 i V6 24V	E	2946	ES9A		10/04 ▸	6455AH	**509791**	
2.0 HDi, 2.0 HDi 16V	D	1997	DW10ATED, DW10BTED4		10/04 ▸	6455AH	**509791**	
2.2 HDi 16V	D	2179	DW12TED4, DW12BTED4		10/04 ▸	6455AH	**509791**	
2.7 HDi 24V	D	2946	DT17TED4		10/04 ▸	6455AH	**509791**	
806 (94>98)								
1.8 i	E	1761	XU7JP		06/95 ▸ 09/98	6455Q7	**508741**	
2.0 i, 2.0 i Turbo	E	1998	XU10J2CTE/L3, XU10J2C		07/94 ▸ 09/98	6455Q7	**508741**	
1.9 TD	D	1905	XUD9TE, XUD9BTF, XUD9TEF		08/94 ▸ 09/98	6455Q7	**508741**	

• **New** Nouveau **Neu** Nuevo **Novo** Nuovo **Nieuw** Nowi **Новый** Novy **Nou** Yeni **Νέους**

		CC				OE	Valeo	
PEUGEOT (.../...)								
806 (94>98) (.../...)								
2.1 TD	D	2088	XUD11BTE		06/96 ▸ 09/98	6455Q7	**508741**	
806 (98>2002)								
1.8 i	E	1761	XU7JP		10/98 ▸ 05/02	6455Q7	**508741**	
2.0 i 16V	E	1997	EW10J4		07/00 ▸ 05/02	6455Q7	**508741**	
2.0 i, 2.0 i 16V, 2.0 i Turbo CT	E	1998	XU10J2CTEL3, XU10J2C/J4R		10/98 ▸ 05/02	6455Q7	**508741**	
1.9 TD	D	1905	XUD9BTF		10/98 ▸ 05/02	6455Q7	**508741**	
2.0 HDi, 2.0 HDi 16V	D	1997	DW10ATED4, DW10ATED		08/99 ▸ 05/02	6455Q7	**508741**	
2.1 TD	D	2088	XUD11BTE		10/98 ▸ 05/02	6455Q7	**508741**	
807								
2.0 i 16V	E	1997	EW10J4	Kit	06/02 ▸	6455AJ	**509525**	
2.2 i 16V	E	2230	EW12J4	Kit	06/02 ▸ 09/05	6455AJ	**509525**	
3.0 i V6	E	2946	ES9J4	Kit	06/02 ▸	6455AJ	**509525**	
2.0 HDi 16V	D	1997	DW10ATED4	Kit	06/02 ▸	6455AJ	**509525**	
2.2 HDi 16V	D	2179	DW12TED4	Kit	06/02 ▸ 02/04	6455AJ	**509525**	
PEUGEOT								
BOXER (94>2001)								
2.0, 2.0 i	E	1998	XU10J2U, XU102CU		02/94 ▸ 12/01	6455AE	**509795**	
1.9 D, 1.9 TD	D	1905	XUD9A/U, XUD9UTF, XUD9TEF		02/94 ▸ 12/01	6455AE	**509795**	
2.0 HDi	D	1997	DW10TD		09/01 ▸ 12/01	6455AE	**509795**	
2.5 D, 2.5 TD, 2.5 TDi	D	2446	DJ5, DJ5TED, DJ5T		02/94 ▸ 12/01	6455AE	**509795**	
2.8 D, 2.8 HDi, 2.8 TD	D	2798	8140-43S, 8140-63, 8140-43		06/99 ▸ 12/01	6455AE	**509795**	
BOXER (2002>)								
2.0 i	E	1998	XU10J2U		01/02 ▸	6455AE	**509795**	
2.0 HDi	D	1997	DW10UTD		01/02 ▸	6455AE	**509795**	
2.2 HDi	D	2179	DW12TED		01/02 ▸	6455AE	**509795**	
2.8 HDi	D	2798	F28TDCR		01/02 ▸	6455AE	**509795**	
EXPERT								
1.6 i	E	1581	160A		09/95 ▸ 12/03	6455Q7	**508741**	
1.8 i	E	1761	XU7JP		07/96 ▸ 12/03	6455Q7	**508741**	
2.0 i 16V	E	1997	EW10J4		09/00 ▸ 12/03	6455Q7	**508741**	
1.9 D	D	1868	DW8B, DW8		05/98 ▸ 12/03	6455Q7	**508741**	
1.9 D, 1.9 TD	D	1905	XUD9TEF, XUD9A, XUD9BTF		09/95 ▸ 12/03	6455Q7	**508741**	
2.0 HDi, 2.0 HDi 16V	D	1997	DW10BTED, DW10CTED DW10ATED4, DW10ATED		09/00 ▸ 12/03	6455Q7	**508741**	
EXPERT II								
2.0 i 16V	E	1997	EW10J4		01/04 ▸	6455Q7	**508741**	
1.9 D	D	1868	DW8B		01/04 ▸	6455Q7	**508741**	
2.0 HDi, 2.0 HDi 16V	D	1997	DW10BTED+L4, DW10ATED4		01/04 ▸	6455Q7	**508741**	
PARTNER (96>2002)								
1.1 i, 1.1 i GPL ▸ 08270	E	1124	TU1M+		06/96 ▸ 07/99	6455P8	**508738**	
1.1 i, 1.1 i GPL 8721 ▸	E	1124	TU1M+, TU1JP		09/00 ▸ 11/02	6455X8	**508873**	
1.4, 1.4 i	E	1360	TU3JP, TU3.2		06/96 ▸ 09/00	6455P8	**508738**	
1.4, 1.4 i, 1.4 i GPL 8721 ▸	E	1360	TU3.2, TU3JP		09/00 ▸ 11/02	6455X8	**508873**	
1.6 i 16V 8721 ▸	E	1587	TU5JP4		09/00 ▸ 11/02	6455X8	**508873**	
1.8 i ▸ 8720	E	1761	XU7JB		05/97 ▸ 09/00	6455P8	**508738**	

Multi-product Crosslist on section 1 Cross List Multi-produits, Section 1 **Crossliste siehe Kapitel 1** Crosslist Multiproducto en la sección 1
Lista Multi-produto na secção 1 Cross-list Multi prodotto nella sezione 1 **Rubriek 1 : Cross list "alle produkten"** Kombinovaný převodník v sekci 1
Crosslist multi-produse, secţie 1 Çoklu ürün çapraz listesi bölüm 1 tedir Αντιστοιχίες προϊόντων στο κεφάλαιο 1

		cc				OE	Valeo	
PEUGEOT (.../...)								
PARTNER (96>2002) (.../...)								
1.8 i 8721 ▸	E	1761	XU7JB		09/00 ▸ 11/02	6455X8	**508873**	
1.8 D	D	1769	XUD7		06/96 ▸ 07/99	6455P8	**508738**	
1.8 D 8271 ▸	D	1769	XUD7		09/00 ▸ 11/02	6455X7	**509402**	
1.9 D	D	1868	DW8		10/98 ▸ 09/00	6455P8	**508738**	
1.9 D 8271 ▸	D	1868	DW8, DW8B		09/00 ▸ 11/02	6455X7	**509402**	
1.9 D ▸8720	D	1905	XUD9A		06/96 ▸ 09/00	6455P8	**508738**	
1.9 D 8271 ▸	D	1905	XUD9A		09/00 ▸ 11/02	6455X7	**509402**	
2.0 HDi ▸8720	D	1997	DW10TD		05/00 ▸ 09/00	6455P8	**508738**	
2.0 HDi 8271 ▸	D	1997	DW10TD		09/00 ▸ 11/02	6455X7	**509402**	
PARTNER (2002>)								
1.1 i	E	1124	TU1JP		11/02 ▸	6455AH	**509791**	
1.4 i	E	1360	TU3JP		11/02 ▸	6455AH	**509791**	
1.6 i 16V	E	1587	TU5JP4		11/02 ▸	6455AH	**509791**	
1.9 D	D	1868	DW8B		11/02 ▸	6455AH	**509791**	
1.6 HDi 16V	D	1560	DV6ATED4, DV6BTED4		01/06 ▸	6455AH	**509791**	
2.0 HDi	D	1997	DW10TD		11/02 ▸	6455AH	**509791**	
RANCH (96>2002)								
1.4 i	E	1360	TU3JP		06/96 ▸ 07/99	6455P8	**508738**	
1.4 i	E	1360	TU3JP		07/99 ▸ 11/02	6455X8	**508873**	
1.8 i	E	1761	XU7JB		07/97 ▸ 07/99	6455P8	**508738**	
1.8 i	E	1761	XU7JB		07/99 ▸ 11/02	6455X8	**508873**	
1.8 D	D	1769	XUD7		06/96 ▸ 07/99	6455P8	**508738**	
1.8 D	D	1769	XUD7		07/99 ▸ 11/02	6455X8	**508873**	
1.9 D	D	1868	DW8		11/98 ▸ 07/99	6455P8	**508738**	
1.9 D	D	1868	DW8		07/99 ▸ 11/02	6455X8	**508873**	
1.9 D	D	1905	XUD9A		06/96 ▸ 07/99	6455P8	**508738**	
1.9 D	D	1905	XUD9A		07/99 ▸ 11/02	6455X8	**508873**	
RANCH (2002>)								
1.4 i	E	1360	TU3JP		11/02 ▸	6455AH	**509791**	
1.9 D	D	1868	DW8B		11/02 ▸	6455AH	**509791**	
2.0 HDi	D	1997	DW10TD		11/02 ▸	6455AH	**509791**	
PORSCHE								
911 (964)								
3.3	E	3299	M30.69		01/93 ▸ 09/93	94457314301	**508805**	
3.6	E	3600	M64.05, M64.01, M64.02		01/93 ▸ 05/94	94457314301	**508805**	
911 (993)								
3.6	E	3600	M64.05, M64.60, M64.06 M64.60R, M64.21		10/93 ▸ 09/97	94457314301	**508805**	
3.8	E	3746	M64.05S		06/95 ▸ 09/97	94457314301	**508805**	
3.8	E	3800	M64.21S		06/95 ▸ 09/97	94457314301	**508805**	
911 (996)								
3.4 i	E	3387	M96.01		06/97 ▸ 07/04	94457314301	**508805**	
3.6 i	E	3596	M96.03		10/01 ▸ 07/04	94457314301	**508805**	
3.6 i GT3	E	3598	M96.76		03/99 ▸ 07/04	94457314301	**508805**	

• **New** Nouveau **Neu** Nuevo **Novo** Nuovo **Nieuw** Nowi **Новый** Novy **Nou** Yeni **Νέους**

		CC				OE	Valeo	
PORSCHE (.../...)								
911 (996) (.../...)								
3.6 i GT2, 3.6 i Turbo	E	3600	M64, M96.70		06/00 ▸	94457314301	**508805**	
911 (997)								
3.6 i	E	3596	M96.05		08/04 ▸	94457314301	**508805**	
3.8 i	E	3824	M97.01		08/04 ▸	94457314301	**508805**	
928								
5.0	E	4957	M2841/42, M2847		06/86 ▸ 07/91	94457314301	**508805**	
968								
3.0	E	2990	M44.43, M44.44		01/93 ▸ 11/95	94457314301	**508805**	
BOXSTER (986)								
2.5 i 24V	E	2480	M96.20		08/96 ▸ 08/99	94457314301	**508805**	
2.7 i 24V	E	2687	M96.22		08/99 ▸ 10/04	94457314301	**508805**	
3.2 i 24V	E	3179	M96.21		08/99 ▸ 10/04	94457314301	**508805**	
BOXSTER (987)								
2.7 i 24V	E	2687	M96.22-240		11/04 ▸	94457314301	**508805**	
3.2 i 24V	E	3179	M96.21-280		11/04 ▸	94457314301	**508805**	
CAYENNE (2008>)								
2.9 i 265 24V	E	2893	MA1.20C		11/08 ▸	94457314301	**508805**	
3.4 i 320 24V,3.4 i 330 24V	E	3436	MA1.21C		11/08 ▸	94457314301	**508805**	
CAYMAN								
2.7 i	E	2687	M97.20		07/06 ▸ 11/08	94457314301	**508805**	
3.4 i	E	3387	M97.21		11/05 ▸ 11/08	94457314301	**508805**	
RENAULT								
SUPER 5								
1.4	E	1397	C1J, C2J		07/84 ▸ 08/90	7700841978	**508612**	
R19								
1.4, 1.4 GPL, 1.4 e, 1.4 i	E	1390	E6J, E7J		07/88 ▸ 11/95	7700272433	**508610**	
1.4, 1.4 GPL, 1.4 e, 1.4 i	E	1390	E6J, E7J		07/88 ▸ 11/95	7700272486	**508616**	
1.4	E	1397	C2J		07/88 ▸ 04/92	7700272433	**508610**	
1.7	E	1721	F2N		07/88 ▸ 08/95	7700272433	**508610**	
1.7, 1.7 i, 1.8 i	E	1721	F2N, F3N		07/88 ▸ 11/95	7700272486	**508616**	
1.8 16S, 1.8 i, 1.8 i 16S	E	1763	F7P		04/89 ▸ 10/95	7700272433	**508610**	
1.8 i, 1.8 i 16S	E	1763	F7P		04/89 ▸ 10/95	7700272486	**508616**	
1.8 i	E	1794	F3P		05/92 ▸ 11/95	7700272486	**508616**	
1.9 D	D	1870	F8Q		07/88 ▸ 08/95	7700272486	**508616**	
1.9 D, 1.9 TD	D	1870	F8Q		09/90 ▸ 10/95	7700272487	**508615**	
R21								
1.4	E	1397	C2J, C2L		06/88 ▸ 06/94	7700841978	**508612**	
1.7, 1.7 i	E	1721	F2N, F3N		03/86 ▸ 08/95	7700841978	**508612**	
2.0	E	1965	F2R		06/86 ▸ 03/92	7700841978	**508612**	
2.0, 2.0 i, 2.0 i Turbo	E	1995	J7R, J6R, J6T		03/86 ▸ 06/94	7700841978	**508612**	
2.2, 2.2 i	E	2165	J7T		06/86 ▸ 08/95	7700841978	**508612**	
2.1 D, 2.1 TD	D	2068	J8S		06/86 ▸ 08/95	7700841978	**508612**	
R25								
2.0	E	1995	J6R, J7R		09/83 ▸ 06/92	7700841978	**508612**	
2.2	E	2165	J7T		09/83 ▸ 06/92	7700841978	**508612**	

⏭ **Multi-product Crosslist on section 1** Cross List Multi-produits, Section 1 **Crossliste siehe Kapitel 1** Crosslist Multiproducto en la sección 1
Lista Multi-produto na secção 1 Cross-list Multi prodotto nella sezione 1 **Rubriek 1 : Cross list "alle produkten"** Kombinovaný převodník v sekci 1
Crosslist multi-produse, secţie 1 Çoklu ürün çapraz listesi bölüm 1 τεdir Αντιστοιχίες προϊόντων στο κεφάλαιο 1

		cc				OE	Valeo	
RENAULT (.../...)								
R25 (.../...)								
2.5 V6 Turbo	E	2458	Z7U		09/85 ▸ 06/92	7700841978	**508612**	
2.6 V6 Injection	E	2664	Z7V		09/83 ▸ 05/89	7700841978	**508612**	
2.8 V6, 2.8 V6 Injection	E	2849	Z7W		09/85 ▸ 06/92	7700841978	**508612**	
2.1 D, 2.1 TD	D	2068	J8S		09/83 ▸ 06/92	7700841978	**508612**	
AVANTIME								
2.2 dCi 16V	D	2188	G9T		02/02 ▸ 03/03	6025315738	**509340**	
CLIO (90>98)								
1.2 i	E	1149	D7F		03/96 ▸ 02/98	7700272365	**508620**	
1.2, 1.2 i	E	1171	E7F, E5F		06/90 ▸ 02/98	7700272365	**508620**	
1.4, 1.4 i	E	1390	E7J, E6J		06/90 ▸ 02/98	7700272365	**508620**	
1.7	E	1721	F2N		06/90 ▸ 02/96	7700272365	**508620**	
1.8 i	E	1794	F3P		09/90 ▸ 02/98	7700272365	**508620**	
CLIO II (98>2001)								
1.2 i, 1.2 i GPL	E	1149	D7F		03/98 ▸ 03/01	7700836314	**509404**	
1.4 i, 1.4 i 16V	E	1390	E7J, K4J, K7J		03/98 ▸ 03/01	7700836314	**509404**	
1.6 i, 1.6 i 16V	E	1598	K7M, K4M		03/98 ▸ 03/01	7700836314	**509404**	
2.0 i 16V	E	1998	F4R		01/00 ▸ 03/01	7700836314	**509404**	
3.0 i V6 24V	E	2946	L7X		01/00 ▸ 03/01	7700836314	**509404**	
3.0 i V6 24V	E	2946	L7X		01/00 ▸ 03/01	8200071647	**509701**	
1.9 D, 1.9 dTi	D	1870	F9Q, F8Q		03/98 ▸ 03/01	7700836314	**509404**	
CLIO II (2001>2005)								
1.0 i	E	999	D7D		04/01 ▸	7700836314	**509404**	
1.2 i, 1.2 i 16V	E	1149	D7F, D4F		04/01 ▸	7700836314	**509404**	
1.4 i, 1.4 i 16V	E	1390	K4J, E7J, K7J		04/01 ▸	7700836314	**509404**	
1.6 i, 1.6 i 16V	E	1598	K4M, K7M		04/01 ▸	7700836314	**509404**	
2.0 i 16V	E	1998	F4R		04/01 ▸	7700836314	**509404**	
3.0 i V6 24V	E	2946	L7X		04/03 ▸	8200112833	**509500**	
1.5 dCi ▸ 020115	D	1461	K9K		04/01 ▸ 01/02	7700836314	**509404**	
1.5 dCi 020115 ▸ 040906	D	1461	K9K		01/02 ▸ 09/04	7700436061	**509792**	
1.5 dCi 040906 ▸	D	1461	K9K		09/04 ▸	8200352288	**509909**	
1.9 D, 1.9 dTi	D	1870	F8Q, F9Q		04/01 ▸	7700836314	**509404**	
ESPACE (84>91)								
2.0	E	1995	J7R		06/87 ▸ 06/91	6025107659	**508619**	
2.2	E	2165	J7T		09/86 ▸ 06/91	6025107659	**508619**	
ESPACE II (91>96)								
2.0 i	E	1995	J7R		01/91 ▸ 08/96	6025107659	**508619**	
2.2 i	E	2165	J7T		01/91 ▸ 08/96	6025107659	**508619**	
2.8 V6	E	2849	Z7W		04/91 ▸ 08/96	6025107659	**508619**	
2.1 dT	D	2068	J8S		01/91 ▸ 08/96	6025107659	**508619**	
ESPACE III (96>2000)								
2.0 i, 2.0 i 16V	E	1998	F3R, F4R		10/96 ▸ 06/00	7701038394	**508623**	
3.0 i V6	E	2946	L7X		07/98 ▸ 06/00	7701038394	**508623**	
3.0 i V6	E	2963	Z7X		10/96 ▸ 06/98	7701038394	**508623**	
1.9 dTi	D	1870	F9Q		10/99 ▸ 06/00	7701045347	**509340**	
2.2 dT ▸ 971001	D	2188	G8T		10/96 ▸ 10/97	7701205485	**508631**	

• **New** Nouveau **Neu** Nuevo **Novo** Nuovo **Nieuw** Nowi **Новый** Novy **Nou** Yeni **Νέους**

		CC				OE	Valeo	

RENAULT (.../...)

ESPACE III (2000>2002)

2.0 i 16V	E	1998	F4R		07/00 ▸ 10/02	6025311363	**509340**	
1.9 dTi	D	1870	F9Q		07/00 ▸ 10/02	7701045347	**509340**	
2.2 dCi	D	2188	G9T		07/00 ▸ 10/02	6025315738	**509340**	

ESPACE IV (2002>)

2.0 i 16V, 2.0 i Turbo 16V	E	1998	F4R		09/02 ▸	8200025640	**509727**	
3.5 i V6 24V	E	3498	V4Y		09/02 ▸	8200025640	**509727**	
1.9 dCi	D	1870	F9Q		09/02 ▸	8200025640	**509727**	
2.2 dCi 16V	D	2188	G9T		09/02 ▸	8200025640	**509727**	
3.0 dCi 24V	D	2958	P9X		09/02 ▸	8200025640	**509727**	

LAGUNA (94>98)

1.8	E	1794	F3P		01/94 ▸ 04/98	7701038394	**508623**	
2.0 S 16V	E	1948	N7Q		05/95 ▸ 04/98	7701038394	**508623**	
2.0	E	1998	F3R		01/94 ▸ 04/98	7701038394	**508623**	
3.0 V6	E	2946	L7X		05/97 ▸ 04/98	7701038394	**508623**	
3.0 V6	E	2963	Z7X		01/94 ▸ 04/98	7701038394	**508623**	
2.2 D	D	2188	G8T		03/94 ▸ 04/98	7701038394	**508623**	
2.2 Dt ▸ 971205	D	2188	G8T		03/96 ▸ 12/97	7701205485	**508631**	

LAGUNA (98>2000)

1.6 i 16V	E	1598	K4M		05/98 ▸ 12/00	7701045347	**509340**	
1.8 i 16V	E	1783	F4P		09/98 ▸ 12/00	7701045347	**509340**	
1.8 i	E	1794	F3P		09/99 ▸ 12/00	7701038394	**508623**	
2.0 i 16V	E	1948	N7Q		05/98 ▸ 12/00	7701038394	**508623**	
2.0 i	E	1998	F3R		05/98 ▸ 12/00	7701045347	**509340**	
2.0 i, 2.0 i 16V	E	1998	F3R, F4R		05/98 ▸ 12/00	7701038394	**508623**	
3.0 i V6	E	2946	L7X		05/98 ▸ 12/00	7701038394	**508623**	
1.9 dCi, 1.9 dTi	D	1870	F9Q		05/98 ▸ 12/00	7701045347	**509340**	

LAGUNA II (2001>2005)

1.6 i 16V	E	1598	K4M		01/01 ▸ 02/05	8200025640	**509727**	
1.8 i 16V	E	1783	F4P		01/01 ▸ 02/05	8200025640	**509727**	
2.0 i 16V, 2.0 ide 16V	E	1998	F4R, F5R		01/01 ▸ 02/05	8200025640	**509727**	
3.0 i V6 24V	E	2946	L7X		01/01 ▸ 02/05	8200025640	**509727**	
1.9 dCi	D	1870	F9Q		01/01 ▸ 02/05	8200025640	**509727**	
2.2 dCi 16V	D	2188	G9T		01/01 ▸ 02/05	8200025640	**509727**	

LAGUNA II (2005>)

1.6 i 16V	E	1598	K4M		03/05 ▸	8200025640	**509727**	
1.8 i 16V	E	1783	F4P		03/05 ▸	8200025640	**509727**	
2.0 i 16V, 2.0 i Turbo 16V	E	1998	F4R		03/05 ▸	8200025640	**509727**	
3.0 i V6 24V	E	2946	L7X		03/05 ▸	8200025640	**509727**	
1.9 dCi	D	1870	F9Q		03/05 ▸	8200025640	**509727**	
2.0 dCi	D	1995	M9R		03/05 ▸	8200025640	**509727**	
2.2 dCi 16V	D	2188	G9T		03/05 ▸	8200025640	**509727**	

LUTECIA (JAP)

1.4 i	E	1390	E7J		03/96 ▸ 02/98	7700272365	**508620**	
1.8 i	E	1794	F3P		10/94 ▸ 02/98	7700272365	**508620**	

MÉGANE (95>99)

1.4 i, 1.4 i 16V	E	1390	E7J, K4J		11/95 ▸ 02/99	7700423936	**508624**	
1.6 i, 1.6 i 16V	E	1598	K7M, K4M		11/95 ▸ 02/99	7700423936	**508624**	
2.0 i, 2.0 i 16V, 2.0 ide 16V	E	1998	F3R, F7R, F5R		11/95 ▸ 02/99	7700423936	**508624**	
1.9 D, 1.9 dT, 1.9 dTi	D	1870	F8Q, F9Q		11/95 ▸ 02/99	7700423936	**508624**	

Bouteille déshydratante/
Cartouche déshydratante/
Accumulateur
Receiver dryer/
Cartridge dryer/
Accumulator

Trockner/
Trocknerkartusche/
Akkumulator
Filtro Deshidratante/
Cartucho deshidratante/
Acumulador

Filtro seco/
Accumulator
Filtro Disidratatore/
Cartuccia disidratante/
Accumulatore

Valeo

		cc				OE	Valeo	
RENAULT (.../...)								
MÉGANE (98>)								
1.4 i, 1.4 i 16V	E	1390	K4J, E7J		02/99 ▸	7700423936	**508624**	
1.4 i 16V	E	1390	K4J		12/00 ▸	8200071647	**509701**	
1.6 i, 1.6 i 16V	E	1598	K4M, K7M		10/98 ▸	7700423936	**508624**	
1.6 i 16V	E	1598	K4M		01/01 ▸	8200071647	**509701**	
1.8 i 16V	E	1783	F4P		10/99 ▸	7700423936	**508624**	
1.8 i 16V	E	1783	F4P		03/01 ▸	8200071647	**509701**	
2.0 i 16V, 2.0 ide 16V	E	1998	F5R, F7R		02/99 ▸ 09/02	7700423936	**508624**	
2.0 i 16V	E	1998	F4R		03/01 ▸ 04/01	8200071647	**509701**	
1.9 d, 1.9 dCi, 1.9 dTi	D	1870	F9Q, F8Q		02/99 ▸	7700423936	**508624**	
1.9 dTi	D	1870	F9Q		02/01 ▸	8200071647	**509701**	
MÉGANE II								
1.4 i 16V	E	1390	K4J		09/02 ▸	8200247360	**509793**	
1.6 i 16V	E	1598	K4M		09/02 ▸	8200247360	**509793**	
2.0 i 16V	E	1998	F4R		09/02 ▸	8200247360	**509793**	
1.5 dCi	D	1461	K9K		09/02 ▸	8200247360	**509793**	
1.9 dCi	D	1870	F9Q		09/02 ▸	8200247360	**509793**	
2.0 dCi	D	1995	M9R		01/06 ▸	8200247360	**509793**	
MÉGANE SCÉNIC (96>99)								
1.4 i, 1.4 i 16V	E	1390	E7J, K4J		10/96 ▸ 09/99	7700423936	**508624**	
1.6 i	E	1598	K7M		10/96 ▸ 09/99	7700423936	**508624**	
2.0 i	E	1998	F3R		10/96 ▸ 09/99	7700423936	**508624**	
1.9 D, 1.9 dT, 1.9 dTi	D	1870	F9Q, F8Q		10/96 ▸ 09/99	7700423936	**508624**	
MÉGANE SCÉNIC (99>2003)								
1.4 i 16V	E	1390	K4J		09/99 ▸ 01/01	7700423936	**508624**	
1.4 i 16V	E	1390	K4J	(-) ESP	09/99 ▸ 04/03	8200112833	**509500**	
1.4 i 16V 010110 ▸	E	1390	K4J		01/01 ▸ 04/03	8200071647	**509701**	
1.6 i 16V	E	1598	K4M		09/99 ▸ 01/01	7700423936	**508624**	
1.6 i 16V	E	1598	K4M	(-) ESP	09/99 ▸ 04/03	8200112833	**509500**	
1.6 i 16V 010110 ▸	E	1598	K4M		01/01 ▸ 04/03	8200071647	**509701**	
1.8 i 16V	E	1783	F4P		09/99 ▸ 01/01	7700423936	**508624**	
1.8 i 16V	E	1783	F4P	(-) ESP	09/99 ▸ 04/03	8200112833	**509500**	
1.8 i 16V 010110 ▸	E	1783	F4P		01/01 ▸ 04/03	8200071647	**509701**	
2.0 i 16V	E	1998	F4R		09/99 ▸ 01/01	7700423936	**508624**	
2.0 i 16V	E	1998	F4R	(-) ESP	09/99 ▸ 04/03	8200112833	**509500**	
2.0 i 16V 010110 ▸	E	1998	F4R		01/01 ▸ 04/03	8200071647	**509701**	
1.9 dCi, 1.9 dTi	D	1870	F9Q	(+) ESP	09/99 ▸ 04/03	8200052125	**509719**	
1.9 dCi, 1.9 dTi	D	1870	F9Q	(-) ESP	09/99 ▸ 04/03	8200112833	**509500**	
1.9 dCi, 1.9 dTi 010110 ▸	D	1870	F9Q		01/01 ▸ 04/03	8200071647	**509701**	
SAFRANE								
2.0 i 16V	E	1948	N7Q		09/96 ▸ 11/00	7701041412	**508622**	
2.0 Si, 2.0 i	E	1995	J7R		05/92 ▸ 06/95	7701039744	**508609**	
2.0 Si, 2.0 i	E	1995	J7R		06/95 ▸ 09/96	7701041412	**508622**	
2.2 Si, 2.2 i	E	2165	J7T		05/92 ▸ 06/95	7701039744	**508609**	
2.2 Si, 2.2 i	E	2165	J7T		06/95 ▸ 09/96	7701041412	**508622**	
2.5 i 20V	E	2435	N7U		09/96 ▸ 11/00	7701041412	**508622**	
3.0 i	E	2946	L7X		12/98 ▸ 11/00	7701041412	**508622**	
3.0 i	E	2963	Z7X		09/96 ▸ 12/98	7701041412	**508622**	
3.0 i V6, 3.0 i V6i **3.0 i V6i Biturbo**	E	2975	Z7X		05/92 ▸ 06/95	7701039744	**508609**	

• **New** Nouveau **Neu** Nuevo **Novo** Nuovo **Nieuw** Nowi **Новый** Novy **Nou** Yeni **Νέους**

		CC				OE	Valeo	
RENAULT (.../...)								
SAFRANE (.../...)								
3.0 i V6, 3.0 i V6i 3.0 i V6i Biturbo	E	2975	Z7X		06/95 ▸ 09/96	7701041412	**508622**	
2.1 Dt	D	2068	J8S		05/92 ▸ 06/95	7701039744	**508609**	
2.1 Dt	D	2068	J8S		06/95 ▸ 09/96	7701041412	**508622**	
2.2 TD	D	2188	G8T		09/96 ▸ 11/00	7701041412	**508622**	
2.5 Dt	D	2445	S8U		04/93 ▸ 06/95	7701039744	**508609**	
2.5 Dt	D	2445	S8U		06/95 ▸ 09/96	7701041412	**508622**	
SCÉNIC II								
1.4 i 16V	E	1390	K4J		05/03 ▸	8200247360	**509793**	
1.6 i 16V	E	1598	K4M		05/03 ▸	8200247360	**509793**	
2.0 i 16V, 2.0 i Turbo 16V	E	1998	F4R		05/03 ▸	8200247360	**509793**	
1.5 dCi	D	1461	K9K		05/03 ▸	8200247360	**509793**	
1.9 dCi	D	1870	F9Q		05/03 ▸	8200247360	**509793**	
2.0 dCi	D	1995	M9R		01/06 ▸	8200247360	**509793**	
THALIA (2008>)								
1.2 i 16V	E	1149	D4F		10/08 ▸	7700836314	**509404**	
1.4 i 16V	E	1390	K4J		10/08 ▸	7700836314	**509404**	
1.5 dCi	D	1461	K9K		10/08 ▸	7700836314	**509404**	
1.6 i 16V	E	1598	K4M		10/08 ▸	7700836314	**509404**	
TWINGO (93>98)								
1.2 i	E	1149	D7F		07/96 ▸ 08/98	7700823668	**508613**	
1.2	E	1239	C3G		03/93 ▸ 01/97	7700823668	**508613**	
TWINGO (98>)								
1.2 i ▸ 991026	E	1149	D7F		09/98 ▸ 10/99	7700823668	**508613**	
1.2 i, 1.2 i 16V 991026 ▸ 001213	E	1149	D7F, D4F		10/99 ▸ 12/00	8200017628	**509590**	
1.2 i, 1.2 i 16V 001213 ▸	E	1149	D4F, D7F		12/00 ▸ 08/04	8200296433	**509718**	
VEL SATIS (2002>2005)								
2.0 i Turbo 16V	E	1998	F4R		01/02 ▸ 01/05	8200025640	**509727**	
3.5 i V6 24V	E	3498	V4Y		01/02 ▸ 01/05	8200025640	**509727**	
2.2 dCi 16V	D	2188	G9T		01/02 ▸ 01/05	8200025640	**509727**	
3.0 dCi V6	D	2958	P9X		01/02 ▸ 01/05	8200025640	**509727**	
RENAULT								
EXPRESS (91>)								
1.4, 1.4 i	E	1390	E7J, E6J		09/91 ▸ 08/97	7700272365	**508620**	
EXTRA (91>97)								
1.4, 1.4 i	E	1390	E7J, E6J		09/91 ▸ 08/97	7700272365	**508620**	
KANGOO (97>2003)								
1.2 i	E	1149	D7F		09/97 ▸ 02/03	7700836314	**509404**	
1.4 i	E	1390	E7J		09/97 ▸ 02/03	7700836314	**509404**	
1.6 i	E	1598	K7M		12/99 ▸ 02/03	7700836314	**509404**	
1.9 D, 1.9 DTi	D	1870	F8Q, F9Q		09/97 ▸ 02/03	7700836314	**509404**	
KANGOO (2003>)								
1.2 i, 1.2 i 16V	E	1149	D7F, D4F		03/03 ▸	7700836314	**509404**	
1.4 i	E	1390	K7J		03/03 ▸	7700836314	**509404**	

⏭ **Multi-product Crosslist on section 1** Cross List Multi-produits, Section 1 **Crossliste siehe Kapitel 1** Crosslist Multiproducto en la sección 1
Lista Multi-produto na secção 1 Cross-list Multi prodotto nella sezione 1 **Rubriek 1 : Cross list "alle produkten"** Kombinovaný převodník v sekci 1
Crosslist multi-produse, secţie 1 Çoklu ürün çapraz listesi bölüm 1 τεdir Αντιστοιχίες προϊόντων στο κεφάλαιο 1

Bouteille déshydratante/
Cartouche déshydratante/
Accumulateur
Receiver dryer/
Cartridge dryer/
Accumulator

Trockner/
Trocknerkartusche/
Akkumulator
Filtro Deshidratante/
Cartucho deshidratante/
Acumulador

Filtro seco/
Accumulator
Filtro Disidratatore/
Cartuccia disidratante/
Accumulatore

Valeo

		cc				OE	Valeo	
RENAULT (.../...)								
KANGOO (2003>) (.../...)								
1.6 i 16V ▸031215	E	1598	K4M		03/03 ▸ 12/03	7700836314	**509404**	
1.5 dCi ▸031215	D	1461	K9K		03/03 ▸ 12/03	7700836314	**509404**	
1.5 dCi ▸041122	D	1461	K9K		03/03 ▸ 11/04	7700436061	**509792**	
1.5 dCi 041122 ▸	D	1461	K9K		11/04 ▸	8200352288	**509909**	
1.9 D, 1.9 dTi	D	1870	F8Q, F9Q		03/03 ▸	7700836314	**509404**	
KANGOO (2007>)								
1.6 i 16V	E	1598	K4M		11/07 ▸	8200247360	**509793**	
1.5 dCi	D	1461	K9K		11/07 ▸	8200247360	**509793**	
MASTER (97>2003)								
1.9 dCi, 1.9 dTi	D	1870	F9Q		02/01 ▸ 09/03	7700836314	**509404**	
1.9 dCi, 1.9 dTi	D	1870	F9Q		02/01 ▸ 09/03	7700841978	**508612**	
2.2 dCi	D	2188	G9T		11/00 ▸ 09/03	7700836314	**509404**	
2.2 dCi	D	2188	G9T		11/00 ▸ 09/03	7700841978	**508612**	
2.5 D	D	2445	S8U		09/97 ▸ 09/03	7700836314	**509404**	
2.5 D	D	2445	S8U		09/97 ▸ 09/03	7700841978	**508612**	
2.5 dCi	D	2463	G9U		12/00 ▸ 09/03	7700836314	**509404**	
2.5 dCi	D	2463	G9U		12/00 ▸ 09/03	7700841978	**508612**	
2.8 dTi	D	2800	S9W		01/98 ▸ 09/03	7700841978	**508612**	
MASTER (2003>)								
1.9 dCi,	D	1870	F9Q.7.72/74		10/03 ▸ 05/06	8200119657	**509954**	
2.2 dCi	D	2188	G9T.7.50		10/03 ▸ 05/06	8200119657	**509954**	
2.5 dCi 100, 2.5 dCi 120 **2.5 dCi 146, 2.5 dCi 150**	D	2464	G9U,ZD3		10/03 ▸	8200119657	**509954**	
RAPID II (91>97)								
1.4 i	E	1390	E7J		09/91 ▸ 03/98	7700272365	**508620**	
TRAFIC II (2001>2006)								
2.0 i 16V	E	1998	F4R		04/01 ▸	8200004174	**509957**	
1.9 dCi	D	1870	F9Q		04/01 ▸	8200004174	**509957**	
2.5 dCi 16V	D	2464	G9U		09/02 ▸	8200004174	**509957**	
RENAULT TRUCKS								
MAGNUM								
AE 385ti.18-19/T, AE 385ti.26/24	D	12024	MIDR 06.35.40 N/3		02/92 ▸ 10/96	5010320194	**815967**	
AE 520 18/T19/19T **AE 520 22T/24/24T/26/26T**	D	16510	MACK-EE9-530		10/92 ▸ 05/96	5010320194	**815967**	
PREMIUM								
Distribution 210.18D, 220.18 **210.16, 250.16, 250.19, 270.18**	D	6177	DCI 6W, DCI 6A MIDR 06.02.26 W/4 MIDR 06.02.26 Y/41		04/96 ▸	5010144817	**815968**	
Distribution 250.18D	D	6180	MIDR 06.02.26 Y/41		04/96 ▸	5010144817	**815968**	
Distribution 240.18 D, 280.18 D **280.26, 320.18, 320.18 D** **320.26**	D	7200	DXI 7		10/05 ▸	5010144817	**815968**	
Distribution 260.16/18/19 **300.18D/26D/16D/19** **340.18D/19D/26D** **Route 300.19T/18/18T/19** **Route 340.18/19/18T/19T**	D	9839	MIDR 06.20.45 C/4 MIDR 06.20.45 D/41, E41		04/96 ▸	5010144817	**815968**	

• **New** Nouveau **Neu** Nuevo **Novo** Nuovo **Nieuw** Nowi **Новый** Novy **Nou** Yeni **Νέους**

		CC				OE	Valeo	
RENAULT TRUCKS (.../...)								
PREMIUM (.../...)								
Distribution 370.18 D/26 410.18D/26, 450.18D Route 410.18 D/24/25/26	D	10800	DXI 11		10/05 ▸	5010144817	**815968**	
Distribution 320.18/24D/26D 370.18D/24D/26D, Route 385.18 400.18	D	11100	DCI 11 B/43 DCI 11C/11E/11G MIDR 06.23.56 A/41-B/41		09/96 ▸	5010144817	**815968**	
ROVER								
25 (99>2004)								
1.4 i 16V 471565 ▸	E	1396	14K4F4		12/99 ▸	JRJ100720	**509720**	
1.6 i 16V 471565 ▸	E	1588	16K4F4		12/99 ▸	JRJ100720	**509720**	
1.8 i 16V 471565 ▸	E	1796	18K16, 18K4		12/99 ▸	JRJ100720	**509720**	
2.0 D ▸ 471564	D	1996	20L2N	+	12/99 ▸	JRJ100660	**509498**	
2.0 D 471565 ▸	D	1996	20L2N		12/99 ▸	JRJ100720	**509720**	
45 (2000>2004)								
1.4 i 16V	E	1396	14K4F4		01/00 ▸ 05/04	JRJ100710	**509721**	
1.6 i 16V	E	1589	16K4F4		01/00 ▸ 05/04	JRJ100710	**509721**	
1.8 i 16V	E	1796	18K4F		01/00 ▸ 05/04	JRJ100710	**509721**	
2.0 i V6 24V	E	1997	20K6F		01/00 ▸ 05/04	JRJ100710	**509721**	
2.0 iDT	D	1994	20T2N		01/00 ▸ 05/04	JRJ100710	**509721**	
200 (95>99)								
211 346190 ▸	E	1113	11K2F	+	01/98 ▸ 11/99	JRJ100660	**509498**	
214 ▸ 346190	E	1396	14K4F4, 14K2F	+	11/95 ▸ 06/98	JRJ100310	**508629**	
214 346190 ▸	E	1396	14K2F, 14K4F4	+	07/98 ▸ 11/99	JRJ100660	**509498**	
216 ▸ 346190	E	1589	16K4F4	+	11/95 ▸ 06/98	JRJ100310	**508629**	
216 346190 ▸	E	1589	16K4F4	+	07/98 ▸ 11/99	JRJ100660	**509498**	
220 ▸ 346190	E	1796	18K16	+	10/96 ▸ 06/98	JRJ100310	**508629**	
220 346190 ▸	E	1796	18K16	+	07/98 ▸ 11/99	JRJ100660	**509498**	
220 ▸ 346190	D	1994	20T2R, 20T2N	+	11/95 ▸ 06/98	JRJ100310	**508629**	
220 346190 ▸	D	1994	20T2R, 20T2N	+	07/98 ▸ 11/99	JRJ100660	**509498**	
Cabriolet, Coupe	E	1589	16K4F4	+	03/96 ▸	JRJ100310	**508629**	
Coupe	E	1796	18K4K	+	03/96 ▸	JRJ100310	**508629**	
400 (95>)								
414 ▸ XD377942	E	1396	14K4F4	+	05/95 ▸	JRJ100270	**508626**	
414 YD471064 ▸	E	1396	14K4F4		06/96 ▸ 03/00	JRJ100710	**509721**	
416 YD471064 ▸	E	1589	16K4F4		05/95 ▸ 03/00	JRJ100710	**509721**	
416 ▸ XD377942	E	1589	16K4F4	+	05/95 ▸	JRJ100270	**508626**	

		cc				OE	Valeo	
ROVER (.../...)								
400 (95>) (.../...)								
420 YD471064 ▸	E	1994	20T4H		05/95 ▸ 03/00	JRJ100710	**509721**	
420 XD377943 ▸ YD471063	E	1994	20T4H	+	11/95 ▸	JRJ100670	**509497**	
420 ▸ XD377942	E	1994	20T4H	+	11/95 ▸	JRJ100270	**508626**	
420 YD471064 ▸	D	1994	20T2R, 20T2N		05/95 ▸ 03/00	JRJ100710	**509721**	
420 XD377943 ▸ YD471063	D	1994	20T2N, 20T2R	+	11/95 ▸	JRJ100670	**509497**	
420 ▸ XD377942	D	1994	20T2R, 20T2N	+	11/95 ▸	JRJ100270	**508626**	
600								
618	E	1850	F18A3		03/96 ▸ 06/00	JRD100050	**508805**	
620	E	1997	F20Z1, F20Z2		04/93 ▸ 06/00	JRD100050	**508805**	
623	E	2259	H23A3		10/93 ▸ 06/00	JRD100050	**508805**	
RV8								
4.0 i V8	E	3947	V8	+	12/92 ▸ 06/96	JRJ100260	**508627**	
SAAB								
900 (79>93)								
2.0, 2.0 T Turbo 2.0 T Turbo 16S, 2.0 i 2.0 i 16V	E	1985	B201S, B202I, B202S, B20S B201I, B201C, B202L, B201T B20T, B20I, B20C		10/80 ▸ 06/93	9480740	**508919**	
2.0 T Turbo, 2.0 T Turbo 16S 2.0 i 16V	E	1985	B202L, B202I, B202S		01/90 ▸ 06/93	4383527	**508921**	
9-3 (98>2003)								
2.0 i 16V, 2.0 i Turbo 16V	E	1985	B204I, B204L		04/98 ▸ 05/03	4868949	**509930**	
2.3 i 16V	E	2290	B234I		04/98 ▸ 05/03	4868949	**509930**	
2.2 TiD	D	2172	X22DTH		05/98 ▸ 11/00	4868949	**509930**	
9-3 (2002>)								
1.8 i 16V	E	1796	Z18XE		11/03 ▸	24418368	**509692**	
1.8 t Turbo 16V, 2.0 t Turbo 16V	E	1998	B207L, B207R, B207E		09/02 ▸	24418371	**509693**	
2.8 t V6 24V Auto	E	2792	B284L		06/05 ▸	24418371	**509693**	
9-5 (97>2001)								
2.0 i Turbo 16V	E	1985	B205E, B205R		09/97 ▸ 08/01	4759072	**509567**	
2.3 i Turbo 16V	E	2290	B235E, B235L, B235R		09/97 ▸ 08/01	4759072	**509567**	
3.0 i V6 Turbo 3.0 i V6 Turbo 24V	E	2962	B308E		01/98 ▸ 08/01	4759072	**509567**	
9-5 (2001>)								
2.0 i Turbo 16V	E	1985	B205E-E2,E4 B205E-D4 B205L-FF		09/01 ▸	4759072	**509567**	
2.3 T Turbo 16V, 2.3 i Turbo 16V	E	2290	B235L-D4, B235XX-E2 B235L-E2, B235XX-D4 B235R-E2, B235R-D4		09/01 ▸	4759072	**509567**	
3.0 i V6 Turbo/ 24V	E	2962	B308E		09/01 ▸ 08/03	4759072	**509567**	
2.2 TiD	D	2171	D223L		02/02 ▸	4759072	**509567**	
3.0 TiD V6	D	2962	D308L		09/01 ▸	4759072	**509567**	

		CC				OE	Valeo	

SEAT

ALHAMBRA

1.8 i 20V	E	1781	AJH		05/98 ▸ 05/00	7M0820191A	**508807**	
1.8 i Turbo 20V	E	1781	AWC		06/00 ▸	7M3898191	**509593**	
2.0 i	E	1984	ADY		03/96 ▸ 05/00	7M0820191A	**508807**	
2.0 i	E	1984	ATM		06/00 ▸	7M3898191	**509593**	
2.8 i VR6 24V	E	2792	AUE, AYL		06/00 ▸	7M3898191	**509593**	
1.9 TDi	D	1896	1Z, AHU, AFN		03/96 ▸ 05/00	7M0820191A	**508807**	
1.9 TDi	D	1896	AUY, ANU		06/00 ▸	7M3898191	**509593**	

ALTEA

1.4 i 16V	E	1390	BXW	Kit	05/06 ▸	1K0298403A	**509790**	
1.6 i	E	1595	BGU, BSF, BSE	Kit	03/04 ▸	1K0298403A	**509790**	
1.8 TFSi 16V	E	1798	BYT	Kit	01/07 ▸	1K0298403A	**509790**	
2.0 FSi 16V, 2.0 TFSi 16V	E	1984	BLR, BVZ, BLY, BVY, BWA	Kit	05/04 ▸	1K0298403A	**509790**	
1.9 TDi	D	1896	BKC, BJB, BLS	Kit	04/04 ▸	1K0298403A	**509790**	
2.0 TDi 16V	D	1968	BKD, BMN, AZV, BMN	Kit	03/04 ▸	1K0298403A	**509790**	

AROSA

1.0 i	E	999	ANV, ALL, AHT, ALD, AER		02/97 ▸	1H0820193A	**508607**	
1.0 i	E	999	AUC, AHT, ALD, ANV, ALL AER	Kit	02/97 ▸	6X0820191A	**508812**	
1.4 i, 1.4 i 16V	E	1390	ANW, AKK, AKV, APQ, AQQ AUB, AEX, AUD, AFK, ANM	Kit	02/97 ▸	6X0820191B	**508812**	
1.4 i, 1.4 i 16V	E	1390	ANW, AKV, AEX, APQ, AFK AKK, AQQ		02/97 ▸	1H0820193A	**508607**	
1.4 TDi	D	1422	AMF	Kit	10/99 ▸	6X0820191A	**508812**	
1.7 SDi	D	1716	AKU	Kit	08/97 ▸	6X0820191A	**508812**	

CORDOBA (93>96)

1.4 i	E	1390	AEX		09/95 ▸ 06/96	1H0820193A	**508607**	
1.4 i	E	1391	ABD		11/93 ▸ 11/95	1H0820193A	**508607**	
1.6 i	E	1595	1F		11/93 ▸ 06/96	1H0820193A	**508607**	
1.6 i	E	1598	AFT, ABU		11/93 ▸ 06/96	1H0820193A	**508607**	
1.8 i, 1.8 i 16V	E	1781	ADZ, ADL, ABS, ACC		11/93 ▸ 06/96	1H0820193A	**508607**	
2.0 i	E	1984	2E, AGG		11/93 ▸ 06/96	1H0820193A	**508607**	
1.9 D, 1.9 SDi, 1.9 TD	D	1896	AAZ, 1Y, AEY		11/93 ▸ 06/96	1H0820193A	**508607**	

CORDOBA (96>99)

1.0 i	E	999	AER		06/97 ▸ 04/99	1H0820193A	**508607**	
1.4 i, 1.4 i 16V	E	1390	ANX, APQ, AEX, AKV, AFH		07/96 ▸ 05/99	1H0820193A	**508607**	
1.6 i	E	1595	1F		07/96 ▸ 05/99	1H0820193A	**508607**	
1.6 i	E	1598	AEE, AFT, ALM		07/96 ▸ 05/99	1H0820193A	**508607**	
1.8 i	E	1781	ADZ, ACC		07/96 ▸ 05/99	1H0820193A	**508607**	
2.0 i, 2.0 i 16V	E	1984	AGG, ABF		07/96 ▸ 04/99	1H0820193A	**508607**	
1.9 D, 1.9 SDi, 1.9 TD, 1.9 TDi	D	1896	AHU, 1Z, 1Y, AEY, AFN, AAZ		07/96 ▸ 05/99	1H0820193A	**508607**	

CORDOBA (99>2002)

1.0 i, 1.0 i 16V	E	999	AST, ANV, AUC, ALD, AVZ		08/99 ▸ 08/02	1J0820191D	**508811**	
1.4 i, 1.4 i 16V	E	1390	ANW, APE, AQQ, AKK, AUB/D		05/99 ▸ 08/02	1J0820191D	**508811**	
1.6 i	E	1595	AUR, AKL, APF, AEH		05/99 ▸ 08/02	1J0820191D	**508811**	
1.6 i	E	1598	ALM		05/99 ▸ 08/02	1J0820191D	**508811**	
1.8 i Turbo 20V	E	1781	AQX		12/99 ▸ 08/02	1J0820191D	**508811**	
1.9 SDi, 1.9 TDi	D	1896	AGR, AGP, ASV, AQM, ALH		05/99 ▸ 08/02	1J0820191D	**508811**	

CORDOBA (2002>)

1.2 i 12V	E	1198	AZQ, BME		10/02 ▸	6Q0820193A	**509594**	
1.4 i 16V	E	1390	BBY, BBZ, BKY		09/02 ▸	6Q0820193A	**509594**	
1.6 i	E	1598	BAH		04/03 ▸	6Q0820193A	**509594**	

		cc				OE	Valeo	
SEAT (.../...)								
CORDOBA (2002>) (.../...)								
2.0 i	E	1984	AZL, BBX		09/02 ▸	6Q0820193A	**509594**	
1.4 TDi	D	1422	AMF		10/02 ▸	6Q0820193A	**509594**	
1.9 SDi, 1.9 TDi	D	1896	ASZ, ATD, ASY		09/02 ▸	6Q0820193A	**509594**	
IBIZA (93>99)								
1.4 i, 1.4 i 16V	E	1390	APQ, AEX, ANX, AFH, AKV		07/95 ▸ 06/99	1H0820193A	**508607**	
1.4 i	E	1391	ABD		09/93 ▸ 06/96	1H0820193A	**508607**	
1.6 i	E	1595	1F		05/94 ▸ 06/99	1H0820193A	**508607**	
1.6 i	E	1598	AEE, AFT, ABU, ALM		02/93 ▸ 06/99	1H0820193A	**508607**	
1.8 i	E	1781	ADZ, ABS, ACC, ADL		02/93 ▸ 06/99	1H0820193A	**508607**	
2.0 i, 2.0 i 16V	E	1984	ABF, 2E, AGG		02/93 ▸ 06/99	1H0820193A	**508607**	
1.9 D, 1.9 SDi, 1.9 TD, 1.9 TDi	D	1896	AAZ, AEY, AHU, AFN, 1Z, 1Y		02/93 ▸ 06/99	1H0820193A	**508607**	
IBIZA (99>2001)								
1.0 i, 1.0 i 16V	E	999	ANV, AUC, ALD, AST, AVZ		08/99 ▸ 11/01	1J0820191D	**508811**	
1.4 i, 1.4 i 16V	E	1390	AUA/B/D, AQQ, AKK, APE, ANW		08/99 ▸ 11/01	1J0820191D	**508811**	
1.6 i	E	1595	APF, AKL, AEH, AUR		06/99 ▸ 11/01	1J0820191D	**508811**	
1.6 i	E	1598	ALM		08/99 ▸ 11/01	1J0820191D	**508811**	
1.8 i Turbo 20V	E	1781	AQX, AYP		12/99 ▸ 11/01	1J0820191D	**508811**	
1.9 SDi, 1.9 TDi	D	1896	AQM, ASV, AGP, AGR, ALH		04/99 ▸ 11/01	1J0820191D	**508811**	
IBIZA (2001>)								
1.2 i 12V ▸ 6L-3-044 431	E	1198	AZQ, BME		11/01 ▸	6Q0820193	**509594**	
1.4 i 16V ▸ 6L-3-044 431	E	1390	BBZ, AUB, BKY, BBY		09/01 ▸	6Q0820193	**509594**	
1.6 i	E	1598	BAH		04/03 ▸	6Q0820193A	**509594**	
1.8 i Turbo 20V	E	1781	BBU, BJX		12/03 ▸	6Q0820193A	**509594**	
2.0 i	E	1984	BBX, AZL		07/02 ▸	6Q0820193A	**509594**	
1.4 TDi ▸ 6L-3-044 431	D	1422	AMF		05/02 ▸	6Q0820193	**509594**	
1.9 SDi, 1.9 TDi 6L-3-044 432 ▸	D	1896	ASZ, ATD, ASY, BPX		09/01 ▸	6Q0820193A	**509594**	
LEON								
1.4 i 16V	E	1390	BCA, AXP, AHW, APE		11/99 ▸	1J0820191D	**508811**	
1.6 i, 1.6 i 16V	E	1595	BCB, AZD, AKL, AEH, AUS		11/99 ▸	1J0820191D	**508811**	
1.8 i 20V, 1.8 i Turbo 20V	E	1781	AGN, APG, ARY, AUQ, AJQ AMK, BAM, APP		11/99 ▸	1J0820191D	**508811**	
2.8 i V6 24V	E	2792	AUE, BDE		10/00 ▸	1J0820191D	**508811**	
1.9 SDi, 1.9 TDi	D	1896	AGR, ASV/Z, AHF, AQM, ALH		11/99 ▸	1J0820191D	**508811**	
LEON II (2005>)								
1.6 i	E	1595	BGU, BSF, BSE	Kit	07/05 ▸	1K0298403A	**509790**	
2.0 FSi, 2.0 TFSi 16V	E	1984	BVZ, BLR, BVY, BWA, BLY	Kit	07/05 ▸	1K0298403A	**509790**	
1.9 Tdi	D	1896	BKC, BLS	Kit	07/05 ▸	1K0298403A	**509790**	
2.0 Tdi	D	1968	BKD, BMM, AZV,BMN	Kit	07/05 ▸	1K0298403A	**509790**	
TOLEDO (91>98)								
1.6	E	1595	EZ		02/91 ▸ 12/91	191820191A	**508922**	
1.6 i ▸ 1L-TR-041977	E	1595	1F		02/91 ▸ 05/96	1L0820191	**508604**	
1.8 i 16V	E	1781	PL, KR		02/91 ▸ 08/93	191820191A	**508922**	
1.8 i ▸ 1L-TR041 977	E	1781	ADZ, ABS, RP		08/93 ▸ 05/96	1L0820191	**508604**	
2.0 i ▸ 1L-ZD308 450	E	1984	2E		02/91 ▸ 10/93	191820191A	**508922**	

		CC				OE	Valeo	
SEAT (.../...)								
TOLEDO (91>98) (.../...)								
2.0 i, 2.0 i 16V 1L-ZD308 451 ▸ 1L-TR041 977	E	1984	ABF, AGG, 2E		10/93 ▸ 05/96	1L0820191	**508604**	
1.9 TD ▸ 1L-ZD308 450	D	1896	AAZ		02/91 ▸ 10/93	191820191A	**508922**	
1.9 D, 1.9 TD, 1.9 TDi 1L-ZD308 451 ▸	D	1896	AAZ, 1Z, 1Y		10/93 ▸ 05/96	1L0820191	**508604**	
TOLEDO (98>2004)								
1.4 i 16V	E	1390	AXP, AHW		01/00 ▸ 05/02	1J0820191D	**508811**	
1.6 i, 1.6 i 16V	E	1595	AEH, AKL, AZD, BCB, AUS		10/98 ▸ 07/04	1J0820191D	**508811**	
1.8 i 20V	E	1781	AGN, APG, AUQ		10/98 ▸ 07/04	1J0820191D	**508811**	
2.3 i VR5 20V	E	2324	AQN, AGZ		10/98 ▸ 11/03	1J0820191D	**508811**	
1.9 TDi	D	1896	AHF, ALH, AGR, ASZ, ASV		10/98 ▸ 07/04	1J0820191D	**508811**	
TOLEDO (2004>)								
1.6 i	E	1595	BGU, BSF, BSE	Kit	09/04 ▸	1K0298403A	**509790**	
2.0 FSi 16V, 2.0 i 16V	E	1984	BLR, BLY	Kit	09/04 ▸	1K0298403A	**509790**	
1.9 TDi	D	1896	BKC, BJB	Kit	09/04 ▸	1K0298403A	**509790**	
2.0 TDi 16V	D	1968	BKD, AZV,BMN	Kit	09/04 ▸	1K0298403A	**509790**	
SEAT								
INCA								
1.4 i, 1.4 i 16V	E	1390	AUD, AKV, AUA, AEX, APQ		11/95 ▸ 06/03	1H0820193A	**508607**	
1.6 i	E	1595	1F		11/95 ▸ 05/97	1H0820193A	**508607**	
1.6 i	E	1598	AEE		06/97 ▸ 09/00	1H0820193A	**508607**	
1.7 SDi	D	1714	AHB		07/96 ▸ 09/00	1H0820193A	**508607**	
1.9 D, 1.9 SDi	D	1896	AEY, AYQ, 1Y		11/95 ▸ 06/03	1H0820193A	**508607**	
SCANIA								
124								
124 C/360	D	11700	DC 12.02/DSC 12.02		05/96 ▸	1337496	**815969**	
124 C/400	D	11700	DSC 12.01		05/96 ▸	1337496	**815969**	
124 C/420	D	11700	DC 12.01/DSC 12.05		05/96 ▸	1337496	**815969**	
124 G/360	D	11700	DSC 12.02		05/96 ▸	1337496	**815969**	
124 G/400	D	11700	DSC 12.01		05/96 ▸	1337496	**815969**	
124 G/420	D	11700	DC 12.01/DSC 12.05		05/96 ▸	1337496	**815969**	
124 L/360	D	11700	DSC 12.02		05/96 ▸	1337496	**815969**	
124 L/400	D	11700	DSC 12.01		05/96 ▸	1337496	**815969**	
124 L/420	D	11700	DC 12.01/DC 12.03/DSC 12.05		05/96 ▸	1337496	**815969**	
144								
144 C/460	D	14200	DSC 14.15		09/96 ▸	1337496	**815969**	
144 C/530	D	14200	DSC 14.13		09/96 ▸	1337496	**815969**	
144 G/460	D	14200	DSC 14.15		09/96 ▸	1337496	**815969**	
144 G/530	D	14200	DSC 14.13		09/96 ▸	1337496	**815969**	
144 L/460	D	14200	DSC 14.15		09/96 ▸	1337496	**815969**	
144 L/530	D	14200	DSC 14.13		09/96 ▸	1337496	**815969**	
SKODA								
FABIA								
1.0 i	E	997	ARV, AQV		10/00 ▸ 08/02	6Q0820193A	**509594**	
1.2 i	E	1198	BMD, BME, AZQ, AWY		02/00 ▸	6Q0820193A	**509594**	
1.4 i 16V	E	1390	BKY, BBZ, AUA, AUB, BBY		10/99 ▸	6Q0820193A	**509594**	
1.4 i	E	1397	AME, AZE, AQW, AZF, ATZ		08/99 ▸ 05/03	6Q0820193A	**509594**	
2.0 i	E	1984	AZL		07/00 ▸	6Q0820193A	**509594**	

⏭ **Multi-product Crosslist on section 1** Cross List Multi-produits, Section 1 **Crossliste siehe Kapitel 1** Crosslist Multiproducto en la sección 1
Lista Multi-produto na secção 1 Cross-list Multi prodotto nella sezione 1 **Rubriek 1 : Cross list "alle produkten"** Kombinovaný převodník v sekci 1
Crosslist multi-produse, secţie 1 Çoklu ürün çapraz listesi bölüm 1 τεdir Αντιστοιχίες προϊόντων στο κεφάλαιο 1

Bouteille déshydratante/
Cartouche déshydratante/
Accumulateur
Receiver dryer/
Cartridge dryer/
Accumulator

Trockner/
Trocknerkartusche/
Akkumulator
Filtro Deshidratante/
Cartucho deshidratante/
Acumulador

Filtro seco/
Accumulator
Filtro Disidratatore/
Cartuccia disidratante/
Accumulatore

Valeo

		cc				OE	Valeo	
SKODA (.../...)								
FABIA (.../...)								
1.4 TDi	D	1422	AMF		09/00 ▸	6Q0820193A	**509594**	
1.9 SDi, 1.9 TDi	D	1896	ATD, ASY, ASZ		10/99 ▸	6Q0820193A	**509594**	
FABIA II (2007>)								
1.4 i, 1.4 i 16V	E	1390	BXW-E4, BXW-E2		01/07 ▸	6Q0820193	**509594**	
1.6 i, 1.6 i 16V	E	1598	BTS-E4, BTS-E2		04/07 ▸	6Q0820193	**509594**	
1.4 TDI	D	1422	BNM, BMS/F, BNV		01/07 ▸	6Q0820193	**509594**	
1.9 TDI	D	1896	BSW, BLS/F		04/07 ▸	6Q0820193	**509594**	
OCTAVIA (96>2000)								
1.4 i	E	1390	AMD		02/99 ▸ 07/00	1J0820191D	**508811**	
1.6 i	E	1595	AEH, AKL		02/97 ▸ 07/00	1J0820191D	**508811**	
1.6 i	E	1598	AEE		10/96 ▸ 07/00	1J0820191D	**508811**	
1.8 i 20V, 1.8 i Turbo 20V	E	1781	AGN, ARZ, AGU		10/96 ▸ 07/00	1J0820191D	**508811**	
2.0 i	E	1984	AZH, AQY, ATF, APK		05/99 ▸ 07/00	1J0820191D	**508811**	
1.9 SDi, 1.9 TDi	D	1896	AGR, AGP, ASV, AHF		10/96 ▸ 07/00	1J0820191D	**508811**	
OCTAVIA (2000>2004)								
1.4 i, 1.4 i 16V	E	1390	AMD, AXP, BCA		08/00 ▸ 04/04	1J0820191D	**508811**	
1.6 i	E	1595	AEH, BFQ, AKL, AVU		08/00 ▸ 04/04	1J0820191D	**508811**	
1.6 i	E	1598	AEE		08/00 ▸ 09/04	1J0820191D	**508811**	
1.8, 1.8 i Turbo 20V	E	1781	AUM, AUQ, AGU, ARX, ARZ		08/00 ▸ 04/04	1J0820191D	**508811**	
2.0 i	E	1984	AZJ, APK, AZH, AEG, AQY		08/00 ▸ 04/04	1J0820191D	**508811**	
1.9 D, 1.9 TDi	D	1896	AGR, ALH, ATD, AHF, ASV/Z		08/00 ▸ 04/04	1J0820191D	**508811**	
OCTAVIA (2004>)								
1.4 i	E	1390	BCA	Kit	05/04 ▸	1K0298403A	**509790**	
1.6 i	E	1595	BGU, BSF, BSE	Kit	05/04 ▸	1K0298403A	**509790**	
1.6 FSi	E	1598	BLF	Kit	05/04 ▸	1K0298403A	**509790**	
1.8 TFSi 16V	E	1798	BZB	Kit	06/07 ▸	1K0298403A	**509790**	
2.0 FSi, 2.0 TFSi 16V	E	1984	BLR, BLX/Y, BWA, BVX/Y/Z	Kit	11/04 ▸	1K0298403A	**509790**	
1.9 TDi	D	1896	BJB, BKC, BLS	Kit	05/04 ▸	1K0298403A	**509790**	
2.0 TDi	D	1968	BKD, AZV, BMM, BMN	Kit	05/04 ▸	1K0298403A	**509790**	
ROOMSTER								
1.2 12V	E	1198	BME		03/06 ▸	6Q0820193A	**509594**	
1.6 16V	E	1598	BTS		03/06 ▸	6Q0820193A	**509594**	
1.4 TDi	E	1422	BNM, BNV		03/06 ▸	6Q0820193A	**509594**	
1.9 TDi	E	1896	AXR		03/06 ▸	6Q0820193A	**509594**	
SUPERB								
1.8 i Turbo 20V	E	1781	AWT		12/01 ▸	3B0820193	**509712**	
2.0 i	E	1984	AZM		12/01 ▸	3B0820193	**509712**	
2.8 i V6 30V	E	2771	AMX, BBG		12/01 ▸	3B0820193	**509712**	
1.9 TDi	D	1896	AVB, AWX, AVF		12/01 ▸	3B0820193	**509712**	
2.5 TDi V6 24V	D	2496	AYM, BDG		12/01 ▸	3B0820193	**509712**	
SUBARU								
LEGACY (89>93)								
1600	E	1597	EJ16AR		01/89 ▸ 09/94	73031AA010	**508957**	
1800 i	E	1820	EJ18SN, EJ18AR		01/89 ▸ 09/94	73031AA011	**508957**	
2000 i	E	1994	EJ20GN, EJ20EN		01/89 ▸ 09/94	73031AA011	**508957**	
2200 i	E	2212	EJ22ER, EJ22EN		01/89 ▸ 09/94	73031AA010	**508957**	
3.0	E	2960	VG30E		01/89 ▸ 09/94	73031AA011	**508957**	

• **New** Nouveau **Neu** Nuevo **Novo** Nuovo **Nieuw** Nowi **Новый** Novy **Nou** Yeni **Νέους**

		CC				OE	Valeo	

TOYOTA

4 RUNNER (130)

3.0 i	E	2959	3VZ-E		08/89 ▸ 05/93	8847116040	**508954**	
3.0 i	E	2959	3VZ-E		08/93 ▸ 11/95	8847134010	**508805**	
2.4 TD	D	2446	2L-T		01/90 ▸ 05/93	8847116040	**508954**	
2.4 TD	D	2446	2L-T		06/93 ▸ 11/95	8847134010	**508805**	
3.0 TD	D	2982	1KZ-T		08/93 ▸ 11/95	8847134010	**508805**	

4 RUNNER (180)

2.7 i	E	2694	3RZ-FE(152)		11/95 ▸ 08/00	8847134010	**508805**	
3.4 i V6	E	3378	5VZ-FE		11/95 ▸	8847134010	**508805**	

AURIS

1.3 VVT-i 100 16V	E	1329	1NRFE-HTWC		09/08 ▸ 10/09	8847417010	**509794**	
1.4 VVT-i 97 16V	E	1398	4ZZFE-HTWC		10/06 ▸ 12/08	8847417010	**509794**	
1.6 VVT-i 124 16V **1.6 VVT-i 132 16V**	E	1598	1ZRFAE-HTWVM,1ZRFE-HTWC		10/06 ▸	8847417010	**509794**	
1.8 VVT-i 147 16V	E	1798	2ZRFAE-HTWVM		12/08 ▸ 10/09	8847417010	**509794**	
1.4 D-4D,1.4 D-4D 90	D	1364	1NDTV-DCR,1NDTV-DCRL		10/06 ▸	8847417010	**509794**	
2.0 D-4D,2.0 D-4D 126	D	1998	1ADFTV-DCR,1ADFTV-DCRL/F		10/06 ▸ 10/09	8847417010	**509794**	

AVENSIS (97>2000)

1.6 i 16V	E	1587	4A-FEC		11/97 ▸ 06/00	8847447010	**509794**	
1.8 i 16V	E	1762	7A-FE		11/97 ▸ 06/00	8847447010	**509794**	
2.0 i 16V	E	1998	3S-FE		11/97 ▸ 06/00	8847447010	**509794**	
2.0 TD	D	1974	2C-TE, 2C-T		11/97 ▸ 06/00	8847447010	**509794**	

AVENSIS (2000>2003)

1.6 VVT-i 16V	E	1598	3ZZ-FE		07/00 ▸ 01/03	8847447010	**509794**	
1.8 i 16V	E	1794	1ZZ-FE		07/00 ▸ 01/03	8847447010	**509794**	
2.0 D-4D 16V	E	1998	3S-FE		07/00 ▸ 01/03	8847447010	**509794**	
2.0 D-4D 16V	D	1995	1CD-FTV		07/00 ▸ 01/03	8847447010	**509794**	
2.0 D4 16V	D	1998	1AZ-FSE		07/00 ▸ 01/03	8847447010	**509794**	

AVENSIS VERSO (2001>)

2.0 VVTi	E	1998	1AZ-FE		05/01 ▸	8847447010	**509794**	
2.0 D-4D	D	1995	1CD-FTV		05/01 ▸	8847447010	**509794**	

CAMRY (91>96)

2.2 i 16V	E	2164	5S-FE		06/91 ▸ 08/96	8847134010	**508805**	
3.0 i V6	E	2959	3VZ-FE		06/91 ▸ 08/96	8847134010	**508805**	

CAMRY (96>2001)

2.2 i	E	2164	5S-FE		08/96 ▸ 07/01	8847134010	**508805**	
3.0 i V6	E	2995	1MZ-FE		08/96 ▸ 07/01	8847134010	**508805**	

CAMRY (2001>)

2.0 i 16V	E	1998	1AZ-FE		08/01 ▸	8847447010	**509794**	
2.4 i 16V	E	2362	2AZ-FE		08/01 ▸	8847447010	**509794**	
3.0 i V6 24V	E	2995	1MZ-FE		08/01 ▸	8847447010	**509794**	

CARINA E (92>97)

1.6 i	E	1587	4A-FE		12/92 ▸ 12/97	8847134010	**508805**	
1.8 i	E	1762	7A-FE		12/94 ▸ 10/97	8847134010	**508805**	
2.0, 2.0 i	E	1998	3S-FE, 3S-GE, 3S-FEC		02/92 ▸ 12/97	8847134010	**508805**	
2.0 D, 2.0 TD	D	1974	2C-T, 2C		10/94 ▸ 10/97	8847134010	**508805**	

CELICA (ST18) (89>93)

1.6	E	1587	4A-FE		10/89 ▸ 10/93	8847116040	**508954**	

⏭ **Multi-product Crosslist on section 1** Cross List Multi-produits, Section 1 **Crossliste siehe Kapitel 1** Crosslist Multiproducto en la sección 1
Lista Multi-produto na secção 1 Cross-list Multi prodotto nella sezione 1 **Rubriek 1 : Cross list "alle produkten"** Kombinovaný převodník v sekci 1
Crosslist multi-produse, secţie 1 Çoklu ürün çapraz listesi bölüm 1 tedir Αντιστοιχίες προϊόντων στο κεφάλαιο 1

		cc				OE	Valeo	
TOYOTA (.../...)								
CELICA (ST18) (89>93) (.../...)								
2.0, 2.0 Turbo	E	1998	3S-GE, 3S-GTE		10/89 ▸ 10/93	8847116040	**508954**	
CELICA (ST200) (93>99)								
1.8 i	E	1762	7A-FE		11/93 ▸ 07/99	8847134010	**508805**	
2.0 i, 2.0 i Turbo	E	1998	3S-GE1, 3S-GTE		11/93 ▸ 07/99	8847134010	**508805**	
CELICA (ZT230) (99>)								
1.8 VVTi 16V	E	1794	1ZZ-FE		08/99 ▸	8847447010	**509794**	
1.8 i 16V, TS 1.8 VVTL-i 16V	E	1796	2ZZ-FE, 2ZZ-GE		08/99 ▸	8847447010	**509794**	
COROLLA (100) (92>97)								
1.3	E	1295	2E		05/93 ▸ 04/97	8847160010	**508805**	
1.3	E	1332	4E-FE		05/93 ▸ 04/97	8847160010	**508805**	
1.6	E	1587	4A-FE		05/93 ▸ 04/97	8847160010	**508805**	
1.8	E	1762	7A-FE		05/93 ▸ 04/97	8847160010	**508805**	
2.0 D	D	1974	2C		05/93 ▸ 04/97	8847160010	**508805**	
COROLLA (110) (97>99)								
1.3 i 12V	E	1295	2E		04/97 ▸ 09/99	8847160010	**508805**	
1.3 i, 1.3 i 16V	E	1332	4E-FE		04/97 ▸ 09/99	8847160010	**508805**	
1.6 i, 1.6 i 16V	E	1587	4A-FE		04/97 ▸ 09/99	8847160010	**508805**	
1.8 i 16V	E	1762	7A-FE		04/97 ▸ 09/99	8847160010	**508805**	
2.0 D	D	1974	2C-E		04/97 ▸ 09/99	8847160010	**508805**	
COROLLA (110) (99>2001)								
1.4 i 16V	E	1398	4ZZ-FE		10/99 ▸ 10/01	8847160010	**508805**	
1.6 VVT-i 16V	E	1598	3ZZ-FE		10/99 ▸ 10/01	8847160010	**508805**	
1.8 i 16V	E	1762	7A-FE		10/99 ▸ 10/01	8847160010	**508805**	
1.8 D, 1.9 D	D	1868	1WZ		12/99 ▸ 10/01	8847160010	**508805**	
2.0 D-4D 16V, 2.0 D4-D 16V	D	1995	1CD-FTV		08/00 ▸ 10/01	8847160010	**508805**	
COROLLA (120) (2001>)								
1.4 VVT-i	E	1398	4ZZ-FE		11/01 ▸	8847447010	**509794**	
1.6 VVT-i	E	1598	3ZZ-FE		11/01 ▸	8847447010	**509794**	
1.8 i 16V, 1.8 VVTL-i 16V TS	E	1796	2ZZ-FE, 2ZZ-GE		11/01 ▸	8847447010	**509794**	
1.4 D-4D	D	1364	1ND-TV-90		07/04 ▸	8847447010	**509794**	
2.0 D-4D 16V	D	1995	1CD-FTV		11/01 ▸	8847447010	**509794**	
COROLLA VERSO (2001>2003)								
1.6 VVT-i	E	1598	3ZZ-FE		10/01 ▸ 12/03	8847447010	**509794**	
1.8 VVT-i	E	1794	1ZZ-FE		10/01 ▸ 12/03	8847447010	**509794**	
2.0 D4-D 16V	D	1995	1CD-FTV		10/01 ▸ 12/03	8847447010	**509794**	
IQ								
1.0 VVT-i 12V	E	998	1KRFE		01/09 ▸	8847417010	**509794**	
1.3 VVT-i 16V	E	1329	1NRFE		05/09 ▸	8847417010	**509794**	
1.4 D-4D	D	1364	1NDTV-DCRL		01/09 ▸	8847417010	**509794**	
LAND CRUISER (BJ70)								
2.4 TD	D	2446	2L-T		05/93 ▸ 01/95	8847160010	**508805**	
2.5 TD	D	2494	3B-VM66A		01/90 ▸ 05/93	8847116040	**508954**	
2.5 TD	D	2494	3B-VM66A		05/93 ▸ 08/01	8847134010	**508805**	
3.0 TD	D	2982	1KZ-T		05/93 ▸ 04/96	8847160010	**508805**	
3.4 D	D	3431	3B		01/90 ▸ 05/93	8847116040	**508954**	
3.4 D	D	3431	3B		05/93 ▸ 08/01	8847134010	**508805**	
4.2 D	D	4164	1HZ		05/93 ▸ 08/01	8847134010	**508805**	

		CC				OE	Valeo	
TOYOTA (.../...)								
LAND CRUISER (HD/UZ 10)								
4.7 i	E	4664	2UZ-FE		01/98 ▸ 08/02	8847447010	**509794**	
4.2 TD	D	4164	1HD-FTE		01/98 ▸ 08/02	8847447010	**509794**	
LAND CRUISER (KZ/VZ9)								
3.4 i V6	E	3378	5VZ-FE		04/96 ▸ 09/02	8847134010	**508805**	
3.0 TD	D	2982	1KZ-TE, 1KD-FTV		04/96 ▸ 09/02	8847134010	**508805**	
MR 2 (AW20)								
2.0 i 16V	E	1998	3S-GEC, 3S-GE		11/93 ▸ 11/99	8847134010	**508805**	
2.0 i, 2.0 i 16V	E	1998	3S-FE, 3S-GEW, 3S-GEC 3S-GE		10/89 ▸ 11/93	8847116040	**508954**	
2.2 i 16V	E	2164	5S-FE		11/93 ▸ 06/95	8847134010	**508805**	
2.2 i 16V	E	2164	5S-FE		12/89 ▸ 11/93	8847116040	**508954**	
MR 2 (AW30)								
1.8 VVT-i 16V	E	1794	1ZZ-FE		12/99 ▸ 08/02	8847447010	**509794**	
PASEO (95>99)								
1.5 i 16V	E	1496	5E-FE		08/95 ▸ 07/99	8847134010	**508805**	
PICNIC (96>2001)								
2.0 i	E	1998	3S-FEC		09/96 ▸ 04/98	8847134010	**508805**	
2.0 i	E	1998	3S-FEC		04/98 ▸ 05/01	8847447010	**509794**	
2.2 TD	D	2184	3C-TE		09/97 ▸ 04/98	8847134010	**508805**	
2.2 TD	D	2184	3C-TE		04/98 ▸ 05/01	8847447010	**509794**	
PICNIC (2001>)								
2.0 VVTi	E	1998	1AZ-FE		05/01 ▸ 10/03	8847447010	**509794**	
2.0 D-4D	D	1995	1CD-FTV		05/01 ▸ 10/03	8847447010	**509794**	
PREVIA (TCR) (90>2000)								
2.4	E	2438	2TZ-FE		08/93 ▸ 01/00	8847128070	**508805**	
PREVIA (R30) (2000>)								
2.0 D-4D	D	1995	1CD-FTV		02/01 ▸	8847447010	**509794**	
2.4 VVTi 16V	E	2362	2AZ-FE		02/00 ▸	8847447010	**509794**	
PRIUS								
1.5 i 16V	E	1497	1NZ-FXE		05/00 ▸	8847447010	**509794**	
RAV4 (94>2000)								
2.0 i	E	1998	3S-FEC, 3S-FE		04/94 ▸ 07/00	8847134010	**508805**	
RAV4 (2000>)								
1.8 i 16V	E	1794	1ZZ-FE-125		05/00 ▸ 07/03	8847447010	**509794**	
2.0 VVT-i 16V, 2.0 i 16V	E	1998	1AZ-FE		05/00 ▸ 07/03	8847447010	**509794**	
2.0 D-4D	D	1995	1CD-FTV		05/01 ▸ 07/03	8847447010	**509794**	
STARLET (EP91) (96>)								
1.3 i	E	1332	4E-FE		01/96 ▸ 07/99	8847134010	**508805**	
SUPRA (JZA80) (93>)								
3.0 i,3.0 i Turbo	E	2997	2JZ-GE,2JZ-GTE		05/93 ▸ 05/96	8847134010	**508805**	
URBAN CRUISER								
1.3 VVT-i 100 16V	E	1329	1NRFE		01/09 ▸	8847417010	**509794**	

⏭ **Multi-product Crosslist on section 1** Cross List Multi-produits, Section 1 **Crossliste siehe Kapitel 1** Crosslist Multiproducto en la sección 1
Lista Multi-produto na secção 1 Cross-list Multi prodotto nella sezione 1 **Rubriek 1 : Cross list "alle produkten"** Kombinovaný převodník v sekci 1
Crosslist multi-produse, secţie 1 Çoklu ürün çapraz listesi bölüm 1 τεdir Αντιστοιχίες προϊόντων στο κεφάλαιο 1

		cc				OE	Valeo	
TOYOTA (.../...)								
URBAN CRUISER (.../...)								
1.4 D-4D 90	D	1364	1NDTV-DCRL		01/09 ▸	8847417010	**509794**	
YARIS (99>2005)								
1.0 i 16V	E	998	1SZ-FE	Japan	01/99 ▸	8847447010	**509794**	
1.0 i 16V	E	998	1SZ-FE	France	01/01 ▸	8847447010	**509794**	
1.3 i 16V	E	1299	2NZ-FE		06/99 ▸	8847447010	**509794**	
1.5 VVTi	E	1497	1NZ-FE		01/01 ▸	8847447010	**509794**	
1.4 D-4D	D	1364	1ND-TV		12/01 ▸	8847447010	**509794**	
YARIS II (2005>)								
1.3 VVT-i	E	1298	2SZ-FE		08/05 ▸	8847447010	**509794**	
1.4 D4-D	D	1364	1ND-TV		08/05 ▸	8847447010	**509794**	
YARIS VERSO								
1.3 i 16V	E	1299	2NZ-FE		11/99 ▸	8847447010	**509794**	
1.5 VVT-i 16V	E	1497	1NZ-FE		03/00 ▸	8847447010	**509794**	
1.4 D-4D	D	1364	1ND-TV		10/01 ▸	8847447010	**509794**	
TOYOTA								
DYNA 100								
1.8	E	1812	2Y		08/87 ▸ 05/95	8847134010	**508805**	
2.4 D	D	2446	2L		1993 ▸ 08/01	8847134010	**508805**	
DYNA 150								
2.8	D	2779	3L		05/95 ▸ 08/98	8847134010	**508805**	
3.4	D	3431	3B		09/88 ▸ 04/95	8847134010	**508805**	
HI-LUX (8-9-10)								
1.8	E	1812	2Y		08/88 ▸ 05/93	8847116040	**508954**	
1.8	E	1812	2Y		05/93 ▸ 08/97	8847134010	**508805**	
2.2 i	E	2236	4Y		08/88 ▸ 05/93	8847116040	**508954**	
2.2 i	E	2236	4Y		05/93 ▸ 08/97	8847134010	**508805**	
2.4 i	E	2366	22R-E		08/88 ▸ 05/93	8847116040	**508954**	
2.4 i	E	2366	22R-E		05/93 ▸ 08/97	8847150010	**508805**	
2.4 D	D	2446	2L		08/88 ▸ 05/93	8847116040	**508954**	
2.4 D	D	2446	2L		05/93 ▸ 08/97	8847134010	**508805**	
VAUXHALL								
ASTRA III (91>98)								
1.4 i, 1.4 i 16V	E	1389	C14SE, X14XE		09/91 ▸ 03/98	52464310	**508740**	
1.6 i, 1.6 i 16V	E	1598	C16SE, C16NZ, X16SZ, X16XEL		09/91 ▸ 03/98	52464310	**508740**	
1.8 i	E	1796	C18NZ		10/91 ▸ 07/94	52464310	**508740**	
1.8 i 16V	E	1799	C18XE, C18XEL		06/93 ▸ 03/98	52464310	**508740**	
2.0 i, 2.0 i 16V	E	1998	C20XE, C20NE, X20XEV		09/91 ▸ 03/98	52464310	**508740**	
1.7 TD Turbo	D	1686	X17DTL		08/94 ▸ 03/98	52464310	**508740**	
ASTRA IV (98>)								
1.2 i 16V	E	1199	X12XE		04/98 ▸ 09/00	9117400	**509400**	
1.4 i 16V	E	1389	X14XE		04/98 ▸	9117400	**509400**	
1.6 i, 1.6 i 16V	E	1598	X16SZR, X16XEL		04/98 ▸	9117400	**509400**	
1.6 i, 1.6 i Twinport 16V	E	1598	Z16SE/E2, Z16XEP		01/02 ▸	93170609	**509691**	
1.8 i 16V	E	1796	Z18XE		09/00 ▸ 12/01	9117400	**509400**	
1.8 i 16V	E	1796	Z18XE		01/02 ▸	93170609	**509691**	
1.8 i 16V	E	1799	X18XE1		04/98 ▸ 09/00	9117400	**509400**	
2.0 i 16V	E	1998	X20XEV		04/98 ▸	9117400	**509400**	
2.2 i 16V	E	2198	Z22SE		07/00 ▸ 12/01	9117400	**509400**	

		CC				OE	Valeo	
VAUXHALL (.../...)								
ASTRA IV (98>) (.../...)								
2.2 i 16V	E	2198	Z22SE		01/02 ▸	93170609	**509691**	
1.7 D Turbo	D	1686	X17DTL		04/98 ▸	9117400	**509400**	
2.0 Di 16V	D	1995	X20DTL, Y20DTL		04/98 ▸	9117400	**509400**	
ASTRA V (2004>)								
1.2 i Twinport 16V	E	1229	Z12XEP		03/04 ▸	1618308	**509949**	
1.4 i Twinport 16V	E	1364	Z14XEP, Z14XEL		03/04 ▸	1618308	**509949**	
1.6 i 16V, 1.6 i Turbo 16V 1.6 i Twinport 16V	E	1598	Z16XEP, Z16LET		03/04 ▸	1618308	**509949**	
1.8 i 16V	E	1796	Z18XER, Z18XE		03/04 ▸	1618308	**509949**	
2.0 i Turbo 16V	E	1998	Z20LEL, Z20LER, Z20LEH		03/04 ▸	1618308	**509949**	
1.3 CDTI 16V	D	1248	Z13DTH		08/05 ▸	1618308	**509949**	
1.7 CDTI, 1.7 CDTI 16V	D	1686	Z17DTR, Z17DTH, Z17DTL		03/04 ▸	1618308	**509949**	
1.9 CDTI, 1.9 CDTI 16V	D	1910	Z19DT, Z19DTJ, Z19DTH Z19DTL		07/04 ▸	1618308	**509949**	
CALIBRA								
2.0 i, 2.0 i 16V R1000001 ▸	E	1998	C20NE, X20XEV		06/94 ▸ 06/97	90486845	**508739**	
2.5 i V6 R1000001 ▸	E	2498	C25XE, X25XE-170		06/94 ▸ 07/97	90486845	**508739**	
CARLTON								
2.0 i	E	1998	C20NE, 20SE		11/86 ▸ 05/94	1131487	**508914**	
2.6 i	E	2594	C26NE		09/90 ▸ 05/94	1131487	**508914**	
3.0 i, 3.0 i 24V	E	2968	30NE, C30SE		03/87 ▸ 08/93	1131487	**508914**	
CAVALIER III (88>95)								
1.6 i	E	1598	C16NZ		01/94 ▸ 10/95	90486845	**508739**	
2.0 i, 2.0 i 16V, 2000 i 16V	E	1998	20XE, C20NE, C20XE, X20XEV		07/93 ▸ 09/95	90486845	**508739**	
2.5 V6 24V	E	2498	C25XE		05/93 ▸ 09/95	90486845	**508739**	
CORSA I (93>2000)								
1.0 i 12V	E	973	X10XE		04/97 ▸ 08/00	90486845	**508739**	
1.2 i 16V	E	1199	X12XE		04/97 ▸ 08/00	90486845	**508739**	
1.4 i, 1.4 i 16V	E	1389	C14SE, X14XE, C14NZ		04/93 ▸ 08/00	90486845	**508739**	
1.6 i 16V	E	1598	C16XE, X16XE		08/93 ▸ 08/00	90486845	**508739**	
CORSA II (2000>2003)								
1.0 i 12V	E	973	Z10XE		09/00 ▸ 08/03	9165715	**509591**	
1.2 i 16V	E	1199	Z12XE		09/00 ▸ 08/03	9165715	**509591**	
1.2 i 16V	E	1199	Z12XE		09/00 ▸ 08/03	93177218	**509929**	
1.4 i 16V	E	1389	Z14XE		09/00 ▸ 08/03	9165715	**509591**	
1.8 i 16V	E	1796	Z18XE		09/00 ▸ 08/03	9165715	**509591**	
1.7 DTi 16V, 1.7 Di 16V	D	1686	Y17DTL, Y17DT		09/00 ▸ 08/03	9165715	**509591**	
1.7 DI 16V, 1.7 DTi 16V	D	1686	Y17DT, Y17DTL		09/00 ▸ 08/03	93177218	**509929**	
CORSA II (2003>)								
1.0 i Twinport 12V	E	998	Z10XEP		09/03 ▸	93177218	**509929**	
1.2 i 16V	E	1199	Z12XE		09/03 ▸ 08/04	93177218	**509929**	
1.2 i Twinport 16V	E	1229	Z12XEP		09/04 ▸	93177218	**509929**	
1.4 i Twinport 16V	E	1364	Z14XEP		09/03 ▸	93177218	**509929**	
1.8 16V	E	1796	Z18XE		09/03 ▸	93177218	**509929**	
1.3 CDTI 16V	D	1248	Z13DT		09/03 ▸	93177218	**509929**	
1.7 DTi 16V, 1.7 Di 16V	D	1686	Y17DTL, Y17DT		09/03 ▸	9165715	**509591**	
1.7 CDTI 16V	D	1686	Z17DTH		09/03 ▸	93177218	**509929**	

⏭ **Multi-product Crosslist on section 1** Cross List Multi-produits, Section 1 **Crossliste siehe Kapitel 1** Crosslist Multiproducto en la sección 1
Lista Multi-produto na secção 1 Cross-list Multi prodotto nella sezione 1 **Rubriek 1 : Cross list "alle produkten"** Kombinovaný převodník v sekci 1
Crosslist multi-produse, secţie 1 Çoklu ürün çapraz listesi bölüm 1 τεdir Αντιστοιχίες προϊόντων στο κεφάλαιο 1

		cc				OE	Valeo	
VAUXHALL (.../...)								
FRONTERA (91>98)								
2.0 i SV720103 ▸ TV899999	E	1998	X20SE	+	04/95 ▸ 01/96	91151169	**508625**	
2.2 i SV720103 ▸ TV899999	E	2198	X22XE	+	04/95 ▸ 01/96	91151169	**508625**	
2.8 TDi SV720103 ▸	D	2771	4JB1-TC	+	04/95 ▸ 09/98	91151169	**508625**	
MERIVA								
1.4 i Twinport 16V	E	1364	Z14XEP		09/04 ▸ 07/10	13128933	**509951**	
1.6 i,1.6 i 16V,1.6 i Turbo 16V	E	1598	Z16LET,Z16SE,Z16XE,Z16XEP		05/03 ▸ 07/10	13128933	**509951**	
1.8 i 16V	E	1796	Z18XE		05/03 ▸ 07/10	13128933	**509951**	
1.3 CDTi 16V	D	1248	Y13DT,Z13DT,Z13DTJ		08/03 ▸ 07/10	13128933	**509951**	
1.7 CDTi 16V,1.7 DTi 16V	D	1686	Y17DT,Z17DTH		05/03 ▸ 07/10	13128933	**509951**	
SENATOR								
2.5 i	E	2490	25NE		09/87 ▸ 09/90	1131487	**508914**	
2.6 i	E	2594	C26NE		09/90 ▸ 08/93	1131487	**508914**	
3.0 i, 3.0 i 24V	E	2968	C30SE, 30NE, C30NE		09/87 ▸ 08/93	1131487	**508914**	
SIGNUM								
1.8 i 16V	E	1796	Z18XE		06/03 ▸	24418368	**509692**	
2.2 DIG 16V	E	2198	Z22YH		06/03 ▸	24418368	**509692**	
2.0 DTi 16V	D	1995	Y20DTH		06/03 ▸	24418371	**509693**	
2.2 DTI 16V	D	2171	Y22DTR		06/03 ▸	24418371	**509693**	
TIGRA								
1.4 i 16V	E	1389	X14XE		11/94 ▸ 01/01	90486845	**508739**	
1.6 i 16V	E	1598	X16XE		11/94 ▸ 01/01	90486845	**508739**	
VECTRA (95>2002)								
1.6 i, 1.6 i 16V	E	1598	X16XEL, X16SZR		10/95 ▸ 03/02	52484491	**509564**	
1.8 i 16V	E	1799	X18XE		10/95 ▸ 03/02	52484491	**509564**	
2.0 i 16V	E	1998	X20XEV		10/95 ▸ 08/00	52484491	**509564**	
2.5 i V6, 2.5 i V6 24V	E	2498	X25XE-170		10/95 ▸ 03/02	52484491	**509564**	
1.7 TD	D	1686	X17DT		10/95 ▸ 07/96	52484491	**509564**	
2.0 Di, 2.0 Di 16V	D	1995	X20DTL		08/96 ▸ 03/02	52484491	**509564**	
VECTRA (2002>2005)								
1.8 i 16V	E	1796	Z18XE		04/02 ▸	24418368	**509692**	
2.2 i 16V	E	2198	Z22SE		04/02 ▸	24418368	**509692**	
3.2 i V6 24V	E	3175	Z32SE		04/02 ▸	24418368	**509692**	
2.0 DTI 16V	D	1995	Y20DTH		04/02 ▸	24418371	**509693**	
2.2 DTI 16V	D	2171	Y22DTR		04/02 ▸	24418371	**509693**	
VECTRA (2005>)								
1.6 i 16V	E	1598	Z16XE		10/05 ▸	24418368	**509692**	
1.8 i 16V	E	1796	Z18XE		10/05 ▸	24418368	**509692**	
2.2 DGI 16V	E	2198	Z22YH		10/05 ▸	24418368	**509692**	
ZAFIRA (99>2003)								
1.6 i 16V ▸ 12999999	E	1598	X16XEL		05/99 ▸ 12/01	9117400	**509400**	
1.6 i 16V 22000001 ▸	E	1598	X16XEL		01/02 ▸ 06/03	93170609	**509691**	
1.8 i 16V ▸ 12999999	E	1799	X18XE1		05/99 ▸ 12/01	9117400	**509400**	
1.8 i 16V 22000001 ▸	E	1799	X18XE1		01/02 ▸ 09/00	93170609	**509691**	

• **New** Nouveau **Neu** Nuevo **Novo** Nuovo **Nieuw** Nowi **Новый** Novy **Nou** Yeni **Νέους**

		CC				OE	Valeo	
VAUXHALL (.../...)								
ZAFIRA (99>2003) (.../...)								
2.0 Di ▸ 12999999	D	1995	X20DTL		05/99 ▸ 12/01	9117400	**509400**	
2.0 Di 22000001 ▸	D	1995	X20DTL		01/02 ▸ 06/03	93170609	**509691**	
ZAFIRA (2003>)								
1.6 i 16V, 1.6 i 16V 16V	E	1598	Z16XE/D4, Z16XE		07/03 ▸ 06/05	1618242	**509691**	
1.8 i 16V	E	1796	Z18XE		07/03 ▸ 06/05	1618242	**509691**	
2.0 i Turbo 16V	E	1998	Z20LET		07/03 ▸ 06/05	1618150	**509400**	
2.2 i 16V	E	2198	Z22SE		07/03 ▸ 06/05	1618242	**509691**	
2.0 DTI 16V, 2.0 DTI 16V 16V	D	1995	Y20DTL		07/03 ▸ 06/05	1618242	**509691**	
2.2 DTI 16V 16V	D	2171	Y22DTR		07/03 ▸ 06/05	1618150	**509400**	
ZAFIRA (2005>)								
1.6 GNV 16V	F	1598	Z16YNG		01/06 ▸	1618308	**509949**	
1.6 i 16V, 1.6 i VVT 16V	E	1598	Z16XEP		07/05 ▸	1618308	**509949**	
1.8 i 16V	E	1796	Z18XER		09/05 ▸	1618308	**509949**	
2.0 i Turbo 16V	E	1998	Z20LEH, Z20LER		07/05 ▸	1618308	**509949**	
2.2 i 16V	E	2198	Z22YH		07/05 ▸	1618308	**509949**	
1.7 CDTI 16V	D	1686	A17DTR/F		12/07 ▸ 07/08	1618308	**509949**	
1.9 CDTI, 1.9 CDTI 16V	D	1910	Z19DTL, Z19DTH, Z19DT		07/05 ▸	1618308	**509949**	
VAUXHALL								
ASTRAMAX								
1.4,1.4 i	E	1389	14NV,C14NZ,C14SE,X14NZ		10/91 ▸ 03/98	52464310	**508740**	
1.6 i	E	1598	16LZ2,C16NZ,X16SZ		10/91 ▸ 03/98	52464310	**508740**	
1.8 i 16V	E	1799	C18XEL		08/94 ▸ 03/98	52464310	**508740**	
1.7 D,1.7 D Turbo	D	1699	17DR,X17DTL		10/91 ▸ 03/98	52464310	**508740**	
COMBO								
1.4 i	E	1389	C14NZ		10/93 ▸ 09/01	90486845	**508739**	
VIVARO (2001>2006)								
2.0 i 16V	E	1998	F4R.7.20		08/01 ▸ 06/06	91166604	**509957**	
1.9 DI, 1.9 DTI	D	1870	F9Q.7.60,F9Q.7.62		08/01 ▸ 06/06	91166604	**509957**	
2.5 DTI	D	2464	G9U.7.30		05/03 ▸ 06/06	91166604	**509957**	
VIVARO (2006>)								
2.0 CDTi 16V ▸ 6V699999	D	1995	M9R.7.80		07/06 ▸ 12/06	91166604	**509957**	
2.5 CDTi 16V ▸ 6V699999	D	2464	G9U.6.30		07/06 ▸ 12/06	91166604	**509957**	
VOLKSWAGEN								
BORA								
1.4 i 16V	E	1390	AHW, AXP, APE, BCA, AKQ		09/98 ▸	1J0820191D	**508811**	
1.6 FSI, 1.6 FSI 16V, 1.6 i 1.6 i 16V	E	1595	AUS, AZD, AEH, BAD, ATN BFQ, APF, AKL, BCB, AVU		09/98 ▸	1J0820191D	**508811**	
1.8 i 20V, 1.8 i Turbo 20V	E	1781	AGN, ARX, AUM, AGU, AUQ		02/99 ▸	1J0820191D	**508811**	
2.0 i	E	1984	APK, AZJ, AQY, AZH		09/98 ▸	1J0820191D	**508811**	
2.3 i V5, 2.3 i V5 20V	E	2324	AGZ, AQN		09/98 ▸ 05/05	1J0820191D	**508811**	
2.8 i VR6, 2.8 i VR6 24V	E	2792	AUE, AQP, BDE		05/99 ▸ 05/03	1J0820191D	**508811**	
1.9 SDi, 1.9 TDi	D	1896	AUY, ASV/Z, AGP/R, ATD, AHF ALH, AJM, AQM, AXR		09/98 ▸ 05/05	1J0820191D	**508811**	

		CC				OE	Valeo	
VOLKSWAGEN (.../...)								
CORRADO								
1.8 i 16V, 1.8 i G60	E	1781	PG, KR		09/88 ▸ 07/92	191820191A	**508922**	
2.0 i 16V	E	1984	9A		08/91 ▸ 07/92	191820191A	**508922**	
2.9 E VR6 ▸ 50-N-020000	E	2861	ABV		08/91 ▸ 07/92	191820191A	**508922**	
EOS								
1.6 FSI 16V	E	1598	BLF	Kit	05/06 ▸	1K0298403A	**509790**	
2.0 FSi 16V, 2.0 TFSi 16V	E	1984	BVY, BVZ, BWA	Kit	05/06 ▸	1K0298403A	**509790**	
3.2 i V6	E	3200	BUB	Kit	05/06 ▸	1K0298403A	**509790**	
2.0 Tdi 16V	D	1968	BMM	Kit	05/06 ▸	1K0298403A	**509790**	
FOX								
1.2 i	E	1198	BMD		11/04 ▸	6Q0820193A	**509594**	
1.4 i	E	1400	BKR		11/04 ▸	6Q0820193A	**509594**	
1.4 TDi	D	1422	BNM		11/04 ▸	6Q0820193A	**509594**	
GOLF I CABRIOLET (79>93)								
1.6	E	1595	EW		02/86 ▸ 07/92	191820191A	**508922**	
1.8, 1.8 i	E	1781	KT, EX		04/84 ▸ 12/87	191820191A	**508922**	
GOLF II (83>92)								
1.05	E	1043	GN, HZ		08/83 ▸ 10/91	191820191A	**508922**	
1.3	E	1272	MH, NU, HK, GT, NZ, HW, 2G		08/83 ▸ 10/91	191820191A	**508922**	
1.6	E	1595	EZ, HM, PN, RF, ABN		08/83 ▸ 07/92	191820191A	**508922**	
1.8 G60	E	1763	1H		08/88 ▸ 12/89	191820191A	**508922**	
1.8, 1.8 G60, 1.8 i 16V	E	1781	GU, HT/V, PB/F/G, RD/H/PV GX/Z, EV, PL, 1P, KR/T		01/84 ▸ 10/91	191820191A	**508922**	
1.6 D, 1.6 TD	D	1588	JP, JR, RA, ME, MF, SB, 1V		08/83 ▸ 07/92	191820191A	**508922**	
GOLF II CABRIOLET (93>98)								
1.6 i	E	1598	AEK		07/94 ▸ 12/95	1H0820193A	**508607**	
1.8 i	E	1781	ABS, AAM		09/93 ▸ 12/97	1H0820193A	**508607**	
1.8 i	E	1781	ANP, ANN		01/98 ▸ 02/98	191820191A	**508922**	
2.0 i	E	1984	ADY, 2E		09/93 ▸ 12/95	1H0820193A	**508607**	
GOLF III (91>97)								
1.4 i	E	1390	AEX		05/96 ▸ 11/97	1H0820193A	**508607**	
1.4 i	E	1391	ABD		09/93 ▸ 06/95	1H0820193A	**508607**	
1.6, 1.6 i	E	1598	AEK, AFT, AKS, ABU		11/91 ▸ 11/97	1H0820193A	**508607**	
1.8, 1.8 i	E	1781	ABS, AAM, ADZ, ACC		11/91 ▸ 11/97	1H0820193A	**508607**	
2.0 16V, 2.0 E, 2.0 i	E	1984	ADY, ABF, AGG, AKR, 2E, AEP		11/91 ▸ 11/97	1H0820193A	**508607**	
2.8 VR6	E	2792	AAA		01/92 ▸ 12/97	1H0820193A	**508607**	
2.9 i VR6	E	2861	ABV		01/94 ▸ 07/95	1H0820193A	**508607**	
1.9 D, 1.9 D Ecomatic, 1.9 SDi 1.9 TD, 1.9 TDi	D	1896	AAZ, 1Z, ALE, 1Y, AFN, AEY AHU		11/91 ▸ 11/97	1H0820193A	**508607**	
GOLF III CABRIOLET (98>2002)								
1.6 i	E	1598	AKS, AFT		03/98 ▸ 10/00	1H0820193A	**508607**	
1.8 i	E	1781	ANP, ADZ, AAM, ANN		03/98 ▸ 10/00	1H0820193A	**508607**	
2.0 i	E	1984	AGG, AWF, AWG, ATU, AKR		03/98 ▸ 06/02	1H0820193A	**508607**	
1.9 TDi	D	1896	AVG, ALE, AFN, AHU		03/98 ▸ 12/01	1H0820193A	**508607**	
GOLF IV (97>2003)								
1.4 i 16V	E	1390	AKQ, AHW, AXP, BCA, APE		10/97 ▸	1J0820191D	**508811**	
1.6 FSI, 1.6 i, 1.6 i 16V	E	1595	AVU, AEH, AUS, BAD, BFQ AKL, APF, BCB, AZD, ATN		10/97 ▸	1J0820191D	**508811**	
1.8 i, 1.8 i 20V, 1.8 i Turbo 1.8 i Turbo 20V	E	1781	AUM, AGN, AGU, ARZ, AUQ		10/97 ▸	1J0820191D	**508811**	

		CC				OE	Valeo	

VOLKSWAGEN (.../...)

GOLF IV (97>2003) (.../...)

2.0 i	E	1984	APK, AQY, AZG/H/J, BEH		08/98 ▸	1J0820191D	**508811**	
2.3 i VR5, 2.3 i VR5 20V	E	2324	AQN, AGZ		10/97 ▸	1J0820191D	**508811**	
2.8 i V6, 2.8 i VR6	E	2792	AUE, BDE, AQP		05/99 ▸	1J0820191D	**508811**	
3.2 i V6 R32	E	3189	BFH		06/02 ▸	1J0820191D	**508811**	
1.9 SDi, 1.9 TDi	D	1896	ATD, ALH, AHF, ASV/Z, AUY AJM, AGP/R, AQM, AXR		10/97 ▸	1J0820191D	**508811**	

GOLF V (2003>2008)

1.4 i 16V, 1.4 FSi 16V	E	1390	BCA, BLN, BKG	Kit	08/03 ▸ 09/08	1K0298403A	**509790**	
1.6 FSi 16V	E	1598	BAG, BLP, BLF	Kit	08/03 ▸ 09/08	1K0298403A	**509790**	
1.6 i	E	1595	BGU, BSF, BSE	Kit	08/03 ▸ 09/08	1K0298403A	**509790**	
2.0 FSI, 2.0 FSi 16V, 2.0 i 16V	E	1984	BLR/X/Y, AXW, AXX, BMB	Kit	08/03 ▸ 09/08	1K0298403A	**509790**	
1.9 TDi	D	1896	BKC, BJB, BLS, BRU	Kit	08/03 ▸ 09/08	1K0298403A	**509790**	
2.0 SDi	D	1968	BDK, BMN	Kit	08/03 ▸ 09/08	1K0298403A	**509790**	
2.0 TDi, 2.0 TDi 16V	D	1968	AZV, BKD, BMM, BMA, BMN	Kit	08/03 ▸ 09/08	1K0298403A	**509790**	

GOLF VI (2008>)

1.4 TFSI	E	1390	CAV, CAX	Kit	10/08 ▸	1K0298403A	**509790**	
1.6 i	E	1595	BSE, BSF, CCS, CHG	Kit	10/08 ▸	1K0298403A	**509790**	
2.0 TDI	D	1968	CBA/F, CBD/F	Kit	10/08 ▸	1K0298403A	**509790**	

GOLF PLUS (2005>)

1.4 i 16V, 1.4 FSi 16V	E	1390	BCA, BLN	Kit	01/05 ▸	1K0298403A	**509790**	
1.6 i	E	1595	BSE, BSF	Kit	05/05 ▸	1K0298403A	**509790**	
1.6 i, 1.6 FSi 16V	E	1598	BLF, BSE, BSF	Kit	01/05 ▸	1K0298403A	**509790**	
2.0 FSi 16V	E	1984	BLY, BLR, BVZ, BVY	Kit	01/05 ▸	1K0298403A	**509790**	
1.9 TDi	D	1896	BLS, BKC, BRU, BXE, BXF	Kit	01/05 ▸	1K0298403A	**509790**	
2.0 TDi, 2.0 TDi 16V	D	1968	AZV, BMM, BKD, BEE	Kit	01/05 ▸	1K0298403A	**509790**	

JETTA I (78>83)

1.1	E	1093	GG		08/83 ▸ 07/84	191820191A	**508922**	
1.3	E	1272	GF, GS		08/83 ▸ 07/84	191820191A	**508922**	
1.6	E	1588	FR		08/83 ▸ 07/84	191820191A	**508922**	
1.6	E	1595	HN		08/83 ▸ 12/83	191820191A	**508922**	

JETTA II (83>92)

1.05	E	1043	HZ		08/86 ▸ 10/91	191820191A	**508922**	
1.3, 1.3 i	E	1272	MH, HK, NZ, HW, GT, NU, 2C		08/83 ▸ 11/92	191820191A	**508922**	
1.6	E	1595	PN, HM, RF, EZ, HN		08/83 ▸ 11/92	191820191A	**508922**	
1.8, 1.8 i, 1.8 i 16V	E	1781	EV, RV, GU, GX, HV, PB/F/L RD/H/P, KR, GZ, 1P, GU-K		01/84 ▸ 10/91	191820191A	**508922**	
1.6 D, 1.6 TD	D	1588	ME, MF, JP, SB, RA, JR, 1V		08/83 ▸ 11/92	191820191A	**508922**	

JETTA (2005>)

1.6 i	E	1598	BSF, BSE	Kit	08/05 ▸	1K0298403A	**509790**	
1.6 FSi	E	1598	BLF	Kit	08/05 ▸	1K0298403A	**509790**	
2.0 FSi, 2.0 TFSi 16V	E	1984	BLR, BLY, BWA	Kit	08/05 ▸	1K0298403A	**509790**	
2.5 i 20V	E	2500	BTK	Kit	09/06 ▸	1K0298403A	**509790**	
1.9 Tdi	D	1896	BLS, BKC	Kit	08/05 ▸	1K0298403A	**509790**	
2.0 Tdi 16V	D	1968	AZV, BKD, BMM, BMN	Kit	08/05 ▸	1K0298403A	**509790**	

LUPO

1.0 i	E	999	ALD, AHT, AER, ANV, ALL		10/98 ▸ 05/00	1H0820193A	**508607**	
1.0 i	E	999	AUC, ALD, ANV	Kit	05/99 ▸	6X0820191A	**508812**	
1.4 i 16V	E	1390	AHW, APE, AKQ, AQQ		10/98 ▸ 05/00	1H0820193A	**508607**	
1.4 FSI 16V, 1.4 i, 1.4 i 16V	E	1390	BBY, AUB, AHW, AFK, ARR AUA, AUD, APE	Kit	05/99 ▸	6X0820191A	**508812**	

		cc				OE	Valeo	
VOLKSWAGEN (.../...)								
LUPO (.../...)								
1.6 i 16V	E	1598	AVY	Kit	06/00 ▸	6X0820191A	**508812**	
1.2 TDi	D	1191	AYZ, ANY	Kit	05/00 ▸	6X0820191A	**508812**	
1.4 TDi	D	1422	AMF	Kit	05/99 ▸	6X0820191A	**508812**	
1.7 SDi	D	1716	AKU	Kit	10/98 ▸	6X0820191A	**508812**	
NEW BEETLE (98>2001)								
1.6 i	E	1595	AYD, AWH		11/99 ▸ 05/01	1C0820191	**508811**	
1.8 i Turbo 20V	E	1781	AVC, APH, AWV, AWU		10/99 ▸ 05/01	1J0820191D	**508811**	
2.0 i	E	1984	AQY, AEG		01/98 ▸ 05/01	1J0820191D	**508811**	
2.3 i V5 20V	E	2324	AQN		10/00 ▸ 05/01	1C0820191	**508811**	
3.2 i V6 24V	E	3189	AXJ		10/00 ▸ 05/01	1C0820191	**508811**	
1.9 TDi	D	1896	ALH, ATD		11/98 ▸ 05/01	1J0820191D	**508811**	
NEW BEETLE (2001>)								
1.4 i 16V	E	1390	BCA		08/01 ▸	1C0820191B	**508811**	
1.6 i	E	1595	BFS, AYD		06/01 ▸	1C0820191	**508811**	
1.8 i Turbo 20V	E	1781	AWU, AWV, BKF, AWP		06/01 ▸	1C0820191	**508811**	
2.0 i	E	1984	AEG, AQY, APK, AZJ, BER BEJ		06/01 ▸	1C0820191	**508811**	
2.3 i V5 20V	E	2324	AQN		06/01 ▸	1C0820191	**508811**	
2.5 i 20V	E	2451	BPS, BPR		07/05 ▸	1C0820191C	**508811**	
1.9 TDi	D	1896	ATD, AXR, ALH, BSW, BEW		06/01 ▸	1J0820191D	**508811**	
NEW BEETLE (2011>)								
1.2 TSi 105 8V	E	1197	CBZB	Kit	07/11 ▸	1K0298403A	**509790**	
1.4 TSi 160 16V,1.4 TSi 170 16V	E	1390	CAVB,CAVD,CNWA	Kit	10/11 ▸	1K0298403A	**509790**	
1.6 TDi 105 16V	D	1598	CAYC	Kit	10/11 ▸	1K0298403A	**509790**	
PASSAT (88>93)								
1.6, 1.6 i	E	1595	1F, RF, ABN		08/88 ▸ 07/92	357820191C	**508606**	
1.8, 1.8 i, 1.8 i 16V	E	1781	PF, RP, ABS, KR, AAM, PG PB		04/88 ▸ 10/93	357820191C	**508606**	
2.0, 2.0 i, 2.0 i 16V	E	1984	2E, ACX, 9A		04/88 ▸ 10/93	357820191C	**508606**	
2.8 i, 2.8 i V6, 2.8 i VR6 31-PB000001 ▸	E	2792	AAA		07/92 ▸ 10/93	357820191C	**508606**	
1.9 TD	D	1896	AAZ		07/92 ▸ 10/93	357820191C	**508606**	
PASSAT (93>97)								
1.6 i	E	1598	AFT, AEK		10/94 ▸ 12/96	3A0820191	**508605**	
1.8 i	E	1781	AAM, ADZ, ABS		10/93 ▸ 12/96	3A0820191	**508605**	
2.0 i, 2.0 i 16V	E	1984	AEP, AGG, ADY, 2E, ACX, ABF		10/93 ▸ 05/97	3A0820191	**508605**	
2.8 i VR6	E	2792	AAA		10/93 ▸ 12/96	3A0820191	**508605**	
2.9 i VR6	E	2861	ABV		01/94 ▸ 05/97	3A0820191	**508605**	
1.9 TD, 1.9 TDi	D	1896	AAZ, AFN, 1Z, AHU		10/93 ▸ 12/96	3A0820191	**508605**	
PASSAT (96>2000)								
1.6 i 3B-W-101655 ▸	E	1595	ADP, ARM, AHL, ANA		07/97 ▸ 08/00	4B0820192	**508881**	
1.8 i, 1.8 i 20V 1.8 i Turbo 20V 3B-W-101655 ▸	E	1781	AEB, APT, APU, ARG, ADR AFY, ANB		07/97 ▸ 08/00	4B0820192	**508881**	
2.0 i	E	2000	ASU, AUZ, AVA		01/00 ▸ 08/00	4B0820192	**508881**	
2.3 i VR5 20V 3B-W-101656 ▸	E	2324	AGZ		07/97 ▸ 08/00	4B0820192	**508881**	
2.8 i V6, 2.8 i V6 30V 3B-W-101655 ▸	E	2771	ACK, AQD, ATX, AGE, APR ALG		06/97 ▸ 08/00	4B0820192	**508881**	
1.9 TDi	D	1896	AHH, AHU, AFN, AVG		07/97 ▸ 08/00	4B0820192	**508881**	

		CC				OE	Valeo	
VOLKSWAGEN (.../...)								
PASSAT (96>2000) (.../...)								
1.9 TDi	D	1896	AJM, ATJ		01/99 ▸ 08/00	8D0820193	**509501**	
2.5 TDi V6	D	2496	AFB, AKN		08/98 ▸ 08/00	8D0820193	**509501**	
PASSAT (2000>2005)								
1.6 i	E	1595	ALZ		10/00 ▸ 05/05	3B0820193	**509712**	
1.8 i Turbo 20V	E	1781	AWT, AWM		10/00 ▸ 05/05	3B0820193	**509712**	
2.0 i, 2.0 i 20V	E	1984	AZM, ALT		10/00 ▸ 05/05	3B0820193	**509712**	
2.3 i, 2.3 i V5	E	2324	AZX		01/01 ▸ 05/05	3B0820193	**509712**	
2.8 i, 2.8 i V6	E	2771	ATQ, AMX		10/00 ▸ 05/05	3B0820193	**509712**	
2.8 i, 2.8 i V6	E	2784	BBG		10/00 ▸ 05/05	3B0820193	**509712**	
4.0 i W8	E	3999	BDN, BDP		10/00 ▸ 05/05	3B0820193	**509712**	
1.9 TDi	D	1896	AWX, AVB, AVF		10/00 ▸ 05/05	3B0820193	**509712**	
2.0 TDi	D	1968	BGW		11/03 ▸ 05/05	3B0820193	**509712**	
2.5 TDi, 2.5 TDi V6	D	2496	AKN, BDG, BAU, BDH		10/00 ▸ 05/05	3B0820193	**509712**	
PASSAT (2005>)								
1.4 FSi 16V, 1.4 TFSi 16V	E	1390	CAX		05/07 ▸	3C0898191	**509926**	
1.6 i	E	1595	BSF, BSE		03/05 ▸	3C0898191	**509926**	
1.6 FSi 16V	E	1598	BLF		03/05 ▸	3C0898191	**509926**	
2.0 FSi 16V, 2.0 TFSi 16V	E	1984	BVY, BLR, BVX, BLY, BVZ AXX, BLX, BWA		03/05 ▸	3C0898191	**509926**	
3.2 FSi V6 24V	E	3189	AXZ		03/05 ▸	3C0898191	**509926**	
3.6 FSi V6 24V	E	3598	BLV		09/05 ▸	3C0898191	**509926**	
1.9 TDi	D	1896	BLS, BXE, BKC		03/05 ▸	3C0898191	**509926**	
2.0 TDi	D	1968	BMA, BUZ, BMP, BVD, BKP BMR, BWV, BVE		03/05 ▸	3C0898191	**509926**	
POLO (94>99)								
1.0 i	E	999	AER, ALL		07/96 ▸ 12/99	1H0820193A	**508607**	
1.0 i	E	1043	AEV		10/94 ▸ 06/96	1H0820193A	**508607**	
1.3 i	E	1296	ADX		10/94 ▸ 04/97	1H0820193A	**508607**	
1.4 i, 1.4 i 16V	E	1390	AKV, APQ, AEX, ANX, AFH		07/95 ▸ 12/99	1H0820193A	**508607**	
1.6 i	E	1595	1F		05/96 ▸ 09/97	1H0820193A	**508607**	
1.6 i, 1.6 i 16V	E	1598	AFT, ALM, AEE, AEA, AJV AHS		10/94 ▸ 12/99	1H0820193A	**508607**	
1.8 i	E	1781	ADD		03/98 ▸ 08/99	1H0820193A	**508607**	
2.0 i	E	1984	ADC		08/99 ▸ 08/99	1H0820193A	**508607**	
1.7 SDI	D	1716	AHG, AKU, AKW		04/97 ▸ 12/99	1H0820193A	**508607**	
1.9 D, 1.9 SDi, 1.9 TDi	D	1896	AEF, ALE, AEY, AFN, AGD AHU, 1Y		10/94 ▸ 12/99	1H0820193A	**508607**	
POLO (99>2001)								
1.0 i	E	999	AUC, ALD	Kit	10/99 ▸ 09/01	6X0820191A	**508812**	
1.4 i, 1.4 i 16V	E	1390	AUB, AHW, AUA, AUD, AFK AKP, AKK	Kit	10/99 ▸ 09/01	6X0820191A	**508812**	
1.4 i, 1.4 i 16V	E	1390	APE, ANW, AUD, AKK, AUA		10/99 ▸ 10/01	1H0820193A	**508607**	
1.6 i	E	1595	AKL, APF, AEH		10/99 ▸ 10/01	1H0820193A	**508607**	
1.6 i, 1.6 i 16V	E	1598	ALM, AUR		10/99 ▸ 10/01	1H0820193A	**508607**	
1.6 i 16V	E	1598	AVY, ARC	Kit	11/99 ▸ 09/01	6X0820191A	**508812**	
1.8 i	E	1781	ADD		03/00 ▸ 09/01	1H0820193A	**508607**	
2.0 i	E	1984	ADC		06/00 ▸ 09/01	1H0820193A	**508607**	
1.4 TDi	D	1422	AMF, ATL	Kit	10/99 ▸ 09/01	6X0820191A	**508812**	
1.7 SDi	D	1716	AKU	Kit	10/99 ▸ 04/00	6X0820191A	**508812**	
1.9 D, 1.9 SDi	D	1896	AEF, AGD, ASX	Kit	10/99 ▸ 09/01	6X0820191A	**508812**	
1.9 SDi, 1.9 TDi	D	1896	ASV, ALH, AQM, AGP, AGR		10/99 ▸ 10/01	1H0820193A	**508607**	
POLO (2001>2004)								
1.0 i	E	999	ARA		03/03 ▸ 09/03	6Q0820193	**509594**	

		CC				OE	Valeo	
VOLKSWAGEN (.../...)								
POLO (2001>2004) (.../...)								
1.2 i, 1.2 i 12V	E	1198	AZQ, AWY, BMD, BME		11/01 ▸	6Q0820193A	**509594**	
1.4 16V, 1.4 FSI 16V, 1.4 i 16V	E	1390	BBY/Z, BKY, AXU, AUA/B		11/01 ▸	6Q0820193	**509594**	
1.6 i	E	1595	BPA		10/04 ▸	6Q0820193A	**509594**	
1.6 i	E	1598	BAH		09/02 ▸	6Q0820193	**509594**	
2.0 i	E	1984	BBX		09/02 ▸	6Q0820193	**509594**	
1.4 TDi	D	1422	BAY, AMF		11/01 ▸	6Q0820193	**509594**	
1.9 SDi, 1.9 TDi	D	1896	ASY, AXR, ATD, BLT, ASZ		11/01 ▸	6Q0820193A	**509594**	
POLO (2005>)								
1.2 i, 1.2 i 12V	E	1198	BME, BMD		04/05 ▸	6Q0820193A	**509594**	
1.4 FSi 16V, 1.4 i 16V	E	1390	BKY, BBZ, AXU		04/05 ▸	6Q0820193A	**509594**	
1.8 GTI Turbo 20V	E	1781	BJX		04/05 ▸	6Q0820193A	**509594**	
1.4 TDi	D	1422	BNM, BNV, BMS		04/05 ▸	6Q0820193A	**509594**	
1.9 SDi, 1.9 TDi, 1.9 TDi 16V	D	1896	AXR, ASY, ATD, ASZ, BLT		04/05 ▸	6Q0820193A	**509594**	
SHARAN (95>2000)								
1.8 i Turbo 20V	E	1781	AJH		11/97 ▸ 02/00	7M0820191A	**508807**	
2.0 i, 2.0 i 16V	E	1984	ADY, ABF		08/95 ▸ 02/00	7M0820191A	**508807**	
2.8 i VR6	E	2792	AAA, AMY		09/95 ▸ 02/00	7M0820191A	**508807**	
1.9 TDi	D	1896	AVG, 1Z, ANU, AFN, AHU		09/95 ▸ 02/00	7M0820191A	**508807**	
SHARAN (2000>2003)								
1.8 i Turbo	E	1781	AWC		04/00 ▸ 05/03	7M3898191	**509593**	
2.0 i	E	1984	ATM		04/00 ▸ 05/03	7M3898191	**509593**	
2.8 i V6, 2.8 i VR6	E	2792	AYL		04/00 ▸ 05/03	7M3898191	**509593**	
1.9 TDi	D	1896	AUY, ANU, ASZ		04/00 ▸ 05/03	7M3898191	**509593**	
VENTO								
1.6 i	E	1598	AEA, AEK, ABU		07/92 ▸ 12/95	1H0820191A	**508607**	
1.8 i 1HP000001 ▸	E	1781	ABS, AAM, ADZ		07/92 ▸ 12/97	1H0820191A	**508607**	
2.0 E 1HP000001 ▸	E	1984	2E, ADY		07/92 ▸ 04/96	1H0820191A	**508607**	
2.8 i, 2.8 i VR6	E	2792	AAA		07/93 ▸ 12/97	1H0820191A	**508607**	
1.9 TD, 1.9 TDi	D	1896	1Z, AAZ		07/92 ▸ 12/97	1H0820191A	**508607**	
VOLKSWAGEN								
CADDY (95>2004)								
1.4 i	E	1390	AEX, APQ, AKV		11/95 ▸ 06/03	1H0820193A	**508607**	
1.6 i	E	1595	1F		11/95 ▸ 05/97	1H0820191A	**508607**	
1.6 i	E	1598	AEE		06/96 ▸ 12/00	1H0820193A	**508607**	
1.7 SDi	D	1716	AHB		07/96 ▸ 09/00	1H0820191A	**508607**	
1.9 D, 1.9 SDi, 1.9 TDi	D	1896	ALE, AEY, AHU, AEF, 1Y		11/95 ▸ 06/03	1H0820193A	**508607**	
LT II (96>2003)								
2.3 i	E	2295	AGL		05/96 ▸ 11/01	2D0820191	**509956**	
2.5 SDi, 2.5 TDI	D	2460	APA, AHD, AGX, ANJ		05/96 ▸	2D0820191	**509956**	
2.5 TDI	D	2461	BBF, AVR, BBE		09/00 ▸	2D0820191	**509956**	
2.8 TD	D	2798	ATA, AGK		07/96 ▸ 01/02	2D0820191	**509956**	
2.8 TD, 2.8 TDI	D	2799	AUH, BCQ		02/02 ▸	2D0820191	**509956**	
TRANSPORTER (F24) (79>92)								
1.9 24-G-075001 ▸	E	1915	DG, SP		02/86 ▸ 07/92	253260633E	**509570**	
2.1 24-G-075001 ▸	E	2109	MV, DJ, SS, SR		02/86 ▸ 07/92	253260633E	**509570**	

		CC				OE	Valeo	
VOLKSWAGEN (.../...)								
TRANSPORTER (F24) (79>92) (.../...)								
1.6 TD	D	1588	JX		02/86 ▸ 07/92	253260633E	**509570**	
TRANSPORTER (F7D) (96>2003)								
2.5 i 70-Y-105 001 ▸	E	2460	APL, AEU, AVT	Kit	11/99 ▸ 06/03	7D0820191	**509728**	
2.8 i VR6 70-Y-089 498 ▸	E	2792	AES	Kit	11/99 ▸ 06/03	7D0820191	**509728**	
2.4 D 70-Y-089 489 ▸	D	2370	AJA	Kit	10/99 ▸ 06/03	7D0820191	**509728**	
2.5 DTi, 2.5 TDi 70-Y-105 001 ▸	D	2460	ACV, AXL	Kit	11/99 ▸ 06/03	7D0820191	**509728**	
2.5 TDi 70-Y-089 498 ▸	D	2461	AJT	Kit	11/99 ▸ 04/02	7D0820191	**509728**	
VOLVO								
850								
2.0 10V, 2.0 20V, 2.0 Turbo 20V	E	1984	B5202F, B5204F, B5204T		06/91 ▸ 12/96	91876292	**508928**	
2.3 20V, 2.3 Turbo **2.3 Turbo 20V**	E	2318	B5234S, B5234T5, B5234T		03/93 ▸ 12/96	9187629	**508928**	
2.5 10V, 2.5 20V, 2.5 i Turbo	E	2435	B5252F, B5254F, B5254T		06/91 ▸ 12/96	9187629	**508928**	
2.5 TDi	D	2461	D5252T		02/96 ▸ 12/96	91876292	**508928**	
S40								
1.6 i 16V	E	1588	B4164S2, B4164S-D3, B4164S		01/97 ▸ 03/04	30621525	**509568**	
1.8 i 16V	E	1731	B4184S, B4184S-D3		10/95 ▸ 08/99	30621526	**509568**	
1.8 i 16V	E	1783	B4184S2, B4184S3		04/99 ▸ 03/04	30621526	**509568**	
1.8 i 16V	E	1834	B4184SM		03/98 ▸ 03/04	30621525	**509568**	
1.9 i Turbo 16V, 2.0 i 16V **2.0 i Turbo 16V**	E	1948	B4204T, B4204S, B4204S2 B4194T		10/95 ▸ 03/04	30621525	**509568**	
1.9 TD, 1.9 TDi	D	1870	D4192T, D4192T2		07/96 ▸ 12/00	30621526	**509568**	
S70								
2.0 i, 2.0 i 10V, 2.0 i Turbo	E	1984	B5204T4, B5204T3, B5204T2 B5202FS		12/96 ▸ 11/00	9187629	**508928**	
2.3 i, 2.3 i Turbo	E	2318	B5234FS, B5234T3, B5234T4 B5234T2		12/96 ▸ 11/00	9187629	**508928**	
2.3 i Turbo	E	2319	B5234T7-E6		05/97 ▸ 11/00	9187629	**508928**	
2.4 i 20V, 2.4 i Turbo 20V **2.5 i 10V, 2.5 i 20V** **2.5 i Turbo 20V**	E	2435	B5254T, B5244S/T B5252/54FS, B5244S2 B5254S		12/96 ▸ 11/00	9187629	**508928**	
2.5 TDi	D	2461	D5252T		12/96 ▸ 11/00	9187629	**508928**	
S80 (98>2006)								
2.0 i, 2.0 i Turbo	E	1984	B5204T4, B5204T3		06/98 ▸	9166174	**509569**	
2.4 i	E	2435	B5244S2, B5244S		06/98 ▸	9166174	**509569**	
2.8 i	E	2783	B6284T		06/98 ▸	9166174	**509569**	
2.9 i	E	2922	B6304S3		06/98 ▸	9166174	**509569**	
2.4 D5	D	2401	D5244T		07/01 ▸	9166174	**509569**	
2.5 TDi	D	2461	D5252T		06/98 ▸	9166174	**509569**	
V40								
1.6 i 16V	E	1588	B4164S-D3, B4164S2, B4164S		05/97 ▸	30621525	**509568**	
1.8 i 16V	E	1731	B4184S, B4184S-D3		10/95 ▸ 12/99	30621526	**509568**	
1.8 i 16V	E	1783	B4184S2, B4184S3		04/99 ▸	30621525	**509568**	
1.8 i 16V	E	1834	B4184SM		03/98 ▸	30621525	**509568**	
1.9 T 16V	E	1855	B4194T2		05/97 ▸ 07/00	30621525	**509568**	
2.0 T Turbo 16V, 2.0 i 16V	E	1948	B4204S, B4204S2, B4204T		10/95 ▸	30621526	**509568**	

		cc				OE	Valeo	
VOLVO (.../...)								
V40 (.../...)								
1.9 TD, 1.9 TDi	D	1870	D4192T, D4192T2		06/96 ▸	30621526	**509568**	
V70 (96>99)								
2.0 i 10V, 2.0 i Turbo 20V	E	1984	B5204T3, B5202FS, B5204T2		05/97 ▸ 06/98	9187629	**508928**	
2.3 i 20V, 2.3 i Turbo 20V	E	2318	B5234FS, B5234T4, B5234T3 B5234T2		05/97 ▸ 06/98	9187629	**508928**	
2.3 i Turbo 20V	E	2319	B5234T7-E6		05/97 ▸ 06/98	9187629	**508928**	
2.4 i Turbo 20V, 2.5 i 10V 2.5 i 20V, 2.5 i Turbo 20V	E	2435	B5252FS, B5254T, B5254FS B5244T		12/96 ▸ 12/99	9187629	**508928**	
2.5 TDi 10V	D	2461	D5252T		05/97 ▸ 06/98	9187629	**508928**	
XC 70 (97>99)								
2.0 i 20V	E	1984	B5204T3		12/97 ▸ 12/99	9187629	**508928**	
2.4 i 20V,2.5 i 20V	E	2435	B5244T,B5254T		12/97 ▸ 12/99	9187629	**508928**	
XC 70 (2000>2007)								
2.3 i Turbo 20V	E	2319	B5234T7		01/00 ▸ 12/04	9166174	**509569**	
2.4 i Turbo 20V	E	2435	B5244T3		05/02 ▸ 09/02	9166174	**509569**	
VOLVO								
FH12								
FH 12.340	D	12100	D12A340, D12C340, D12D340		08/93 ▸	1618848	**815970**	
FH 12.380	D	12100	D12A380, D12C380, D12D380		08/93 ▸	1618848	**815970**	
FH 12.420	D	12100	D12A420, D12C420, D12D420		08/93 ▸	1618848	**815970**	
FH 12.460	D	12100	D12C460, D12D460		08/98 ▸	1618848	**815970**	
FH 12.500	D	12100	D12D500		09/01 ▸	1618848	**815970**	
FH16								
FH 16.470	D	16120	D16A470		08/93 ▸ 12/99	1618848	**815970**	
FH 16.520	D	16120	D16A520, D16B520		08/93 ▸ 12/02	1618848	**815970**	
FH 16.540, FH 16.550	D	16120	D16C550, D16E540, D16G540		01/03 ▸	1618848	**815970**	

508291

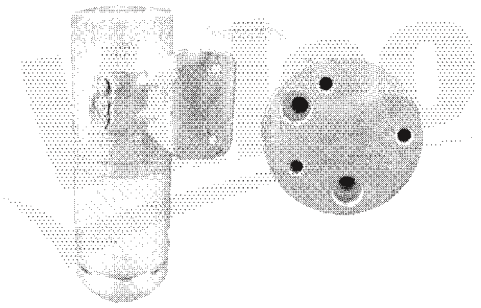

FIAT	46802605

508603

PEUGEOT	6455R9

508594

MERCEDES	2018300083

508604

SEAT	1L0820191

508597

CITRÖEN	6455R1

508605

VOLKSWAGEN	3A0820191

508599

BMW	64538391313
BMW	64538372977

508606

VOLKSWAGEN	357820191C

Valeo 508607

SEAT	1H0820193A
VOLKSWAGEN	1H0820193A

Valeo 508609

RENAULT	7701039744

Valeo 508610

RENAULT	7700272433

Valeo 508611

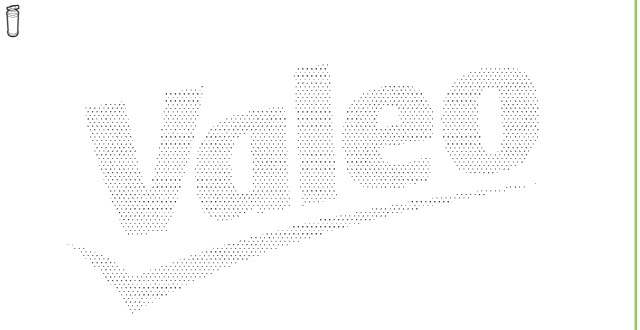

ALFA ROMEO	60510695

Valeo 508612

RENAULT	7700841978

Valeo 508613

RENAULT	7700823668

Valeo 508615

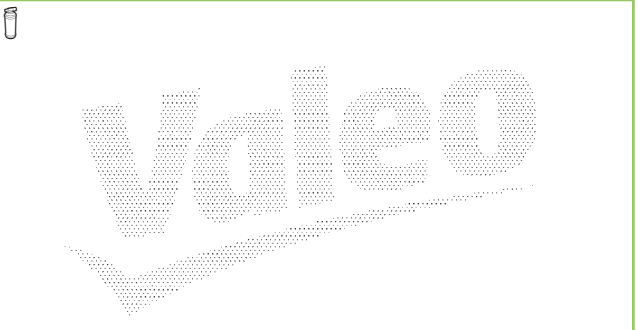

RENAULT	7700272487

Valeo 508616

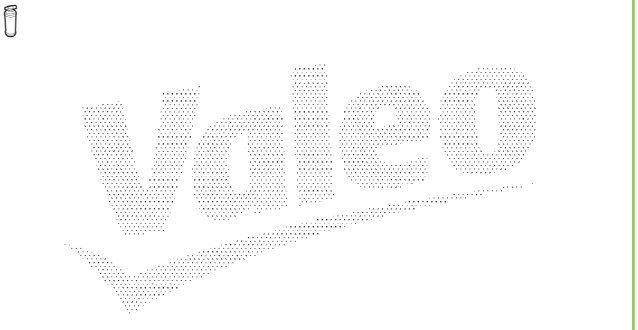

RENAULT	7700272486

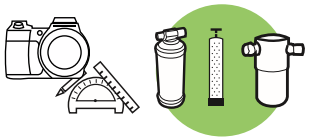

Valeo 508619

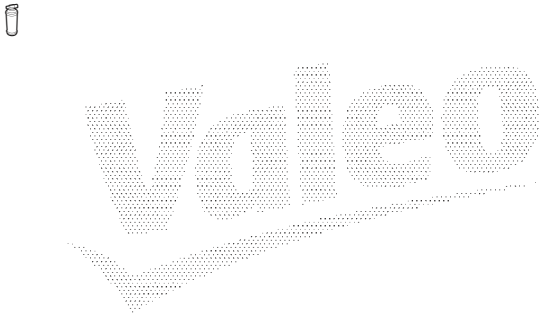

RENAULT	6025107659

Valeo 508620

RENAULT	7700272365

Valeo 508622

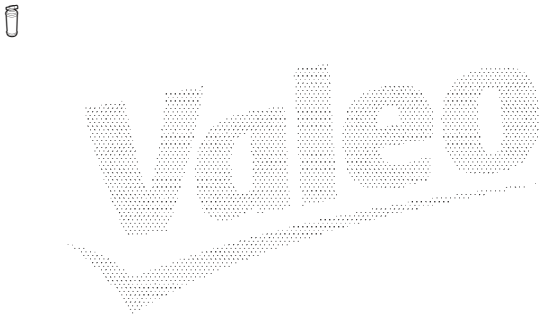

RENAULT	7701041412

Valeo 508623

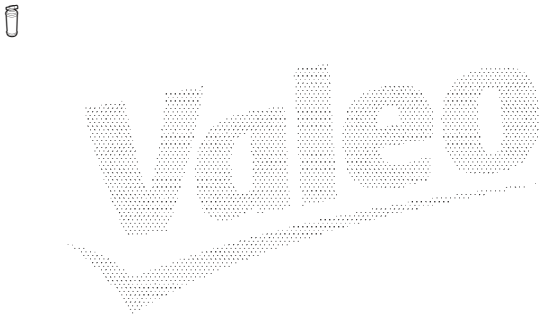

RENAULT	7701038394

Valeo 508624

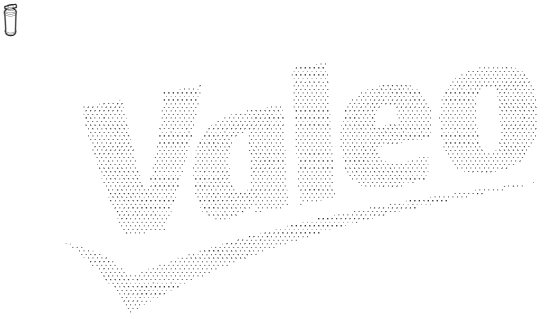

RENAULT	7700423936

Valeo 508625

OPEL	1848027
VAUXHALL	91151169

Valeo 508626

ROVER	JRJ100270

Valeo 508627

MG	JRJ100260
ROVER	JRJ100260

Valeo 508628

ALFA ROMEO	60810151
FIAT	82478872
LANCIA	82478872

Valeo 508629

ROVER	JRJ100310

Valeo 508630

ALFA ROMEO	60810200
FIAT	82478871
LANCIA	60812379

Valeo 508631

RENAULT	7701205485

Valeo 508731

MERCEDES	1248300183
MERCEDES	1248300283

Valeo 508736

FORD	7067762
FORD	7107568

Valeo 508737

PEUGEOT	6455S0

Valeo 508738

CITRÖEN	6455P8
PEUGEOT	6455P8

Valeo 508739

OPEL	1618016
VAUXHALL	90486845

Valeo 508740

OPEL	1618013
VAUXHALL	52464310

Valeo 508741

CITRÖEN	6455Q7
FIAT	9617682080
LANCIA	9617682080
PEUGEOT	6455Q7

Valeo 508805

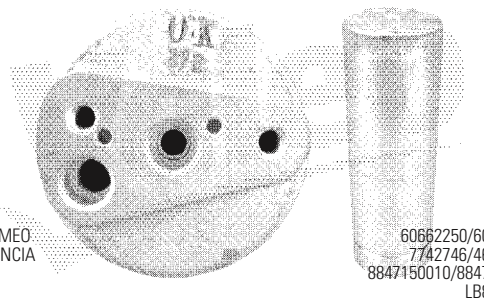

ALFA ROMEO	60662250/60617282
FIAT / LANCIA	7742746/46527180
LEXUS	8847150010/8847128070
MAZDA	LB8361501
MITSUBISHI	MB918516/MR117107
PORSCHE	94457314301
ROVER	JRD100050
TOYOTA	8847160010/8847134010

Valeo 508807

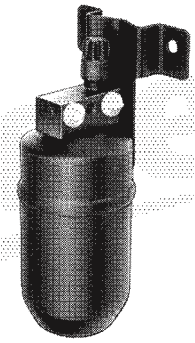

FORD	7230473
SEAT	7M0820191A
VOLKSWAGEN	7M0820191A

Valeo 508811

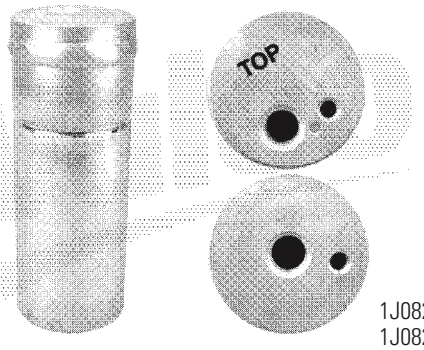

AUDI	1J0820191D
SEAT	1J0820191D
SKODA	1J0820191D
VOLKSWAGEN	1J0820191D

Valeo 508812

KIT

SEAT	6X0820191A
VOLKSWAGEN	6X0820191A

Valeo 508834

PEUGEOT	6453Q5

Valeo 508835

CITRÖEN 6453V6

Valeo 508836

CITRÖEN 6453Y5

Valeo 508837

CITRÖEN 6455Q4

Valeo 508840

CITRÖEN 6453Z0
PEUGEOT 6453Z0

Valeo 508870

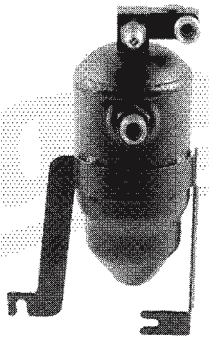

CITRÖEN 6455V1

Valeo 508871

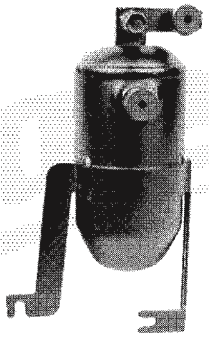

CITRÖEN 6455X4

Valeo 508872

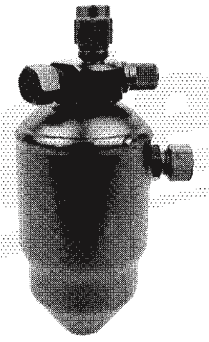

PEUGEOT 6453V1

Valeo 508873

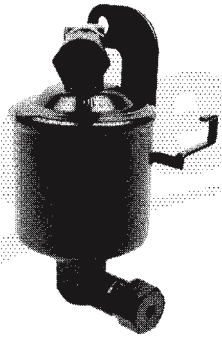

CITRÖEN 6455X8
PEUGEOT 6455X8

508874

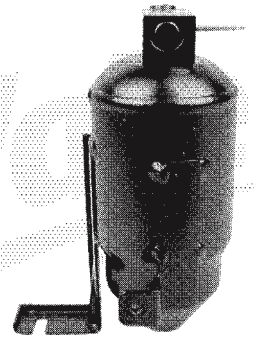

PEUGEOT	6455V6

508882

AUDI	4A0820191AB

508879

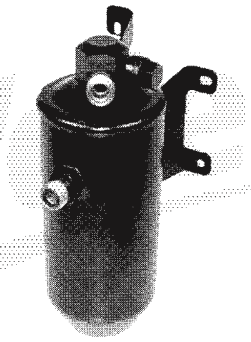

FORD	7232889

508885

AUDI	4A0820191AA

508880

AUDI	8A0820191B

508888

FORD	3743793
FORD	1118717

508881

AUDI	8A0820191AB
AUDI	4B0820192
VOLKSWAGEN	4B0820192

508889

FORD USA	3898063

Valeo 508891

JEEP 55035772

Valeo 508892

JEEP 4797002

Valeo 508895

CHRYSLER 4596172

Valeo 508898

CHRYSLER 4677138

Valeo 508899

CHRYSLER 4682592

Valeo 508900

JAGUAR CAC1881

Valeo 508902

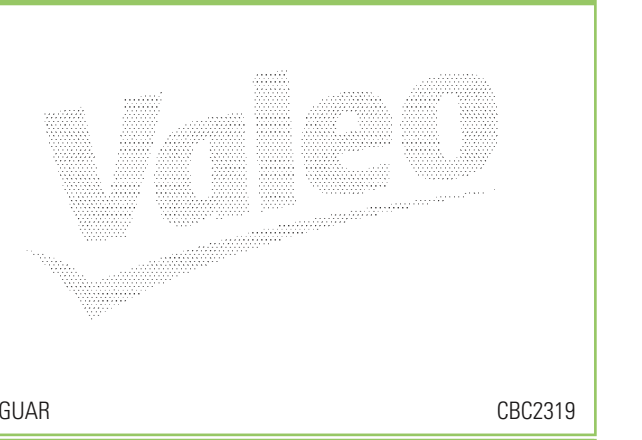

JAGUAR CBC2319

Valeo 508906

MERCEDES 1298300183

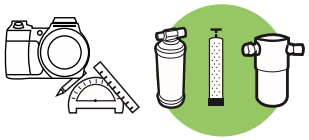

Valeo 508907

MERCEDES	1298300283

Valeo 508909

MERCEDES	2028300283

Valeo 508911

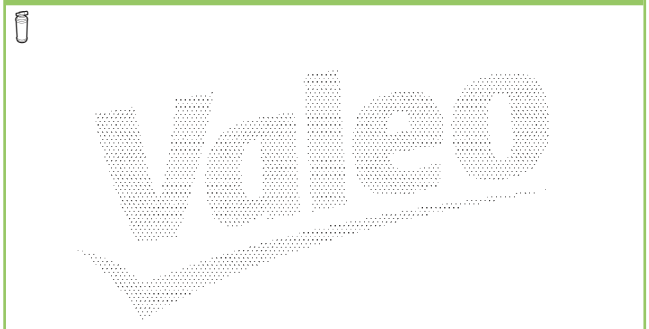

MERCEDES	2108300483

Valeo 508914

OPEL	1848032
VAUXHALL	1131487

Valeo 508919

SAAB	9480740

Valeo 508921

SAAB	4383527

Valeo 508922

SEAT	191820191A
VOLKSWAGEN	191820191A

Valeo 508928

VOLVO	91876292
VOLVO	9187629

Valeo 508932

JEEP	4797001

Valeo 508934

HONDA	80351ST7003

Valeo 508935

HONDA	80351S04003
HONDA	80351S01A01

Valeo 508936

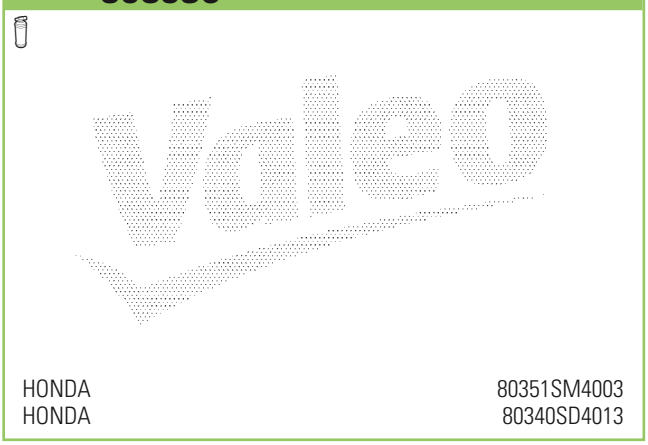

HONDA	80351SM4003
HONDA	80340SD4013

Valeo 508940

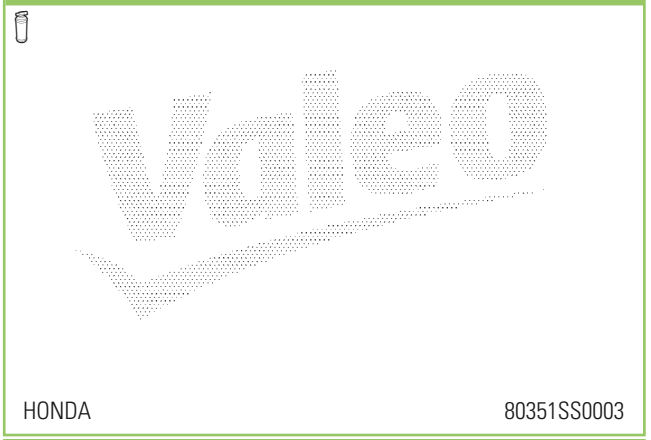

HONDA	80351SS0003

Valeo 508951

MAZDA	GJ8361500D
MAZDA	GC3N61500B

Valeo 508954

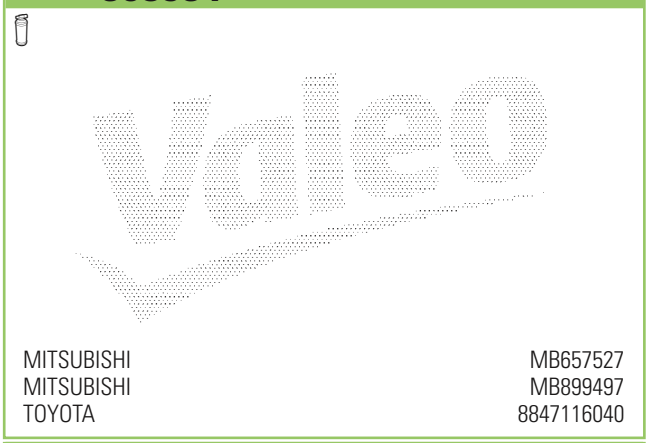

MITSUBISHI	MB657527
MITSUBISHI	MB899497
TOYOTA	8847116040

Valeo 508957

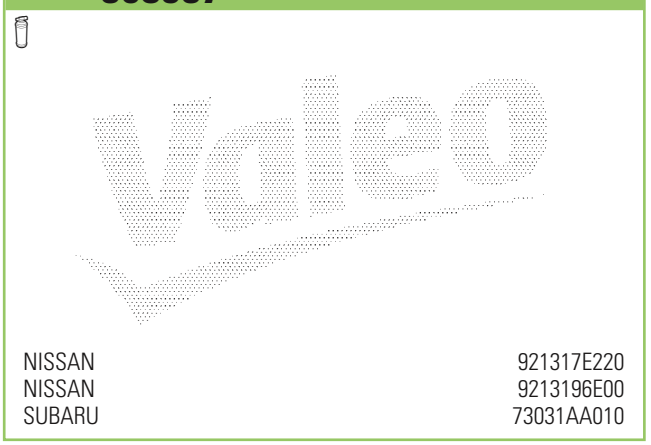

NISSAN	921317E220
NISSAN	9213196E00
SUBARU	73031AA010

Valeo 509340

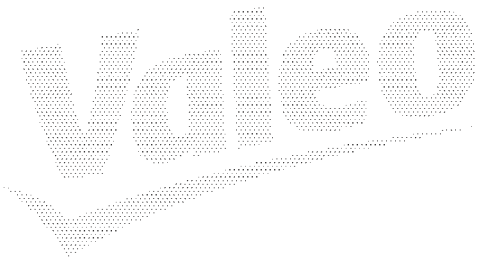

RENAULT 7701045347

Valeo 509394

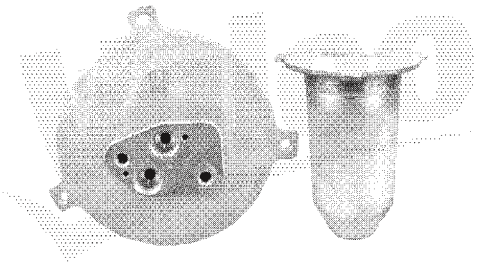

BMW 64538375757

Valeo 509391

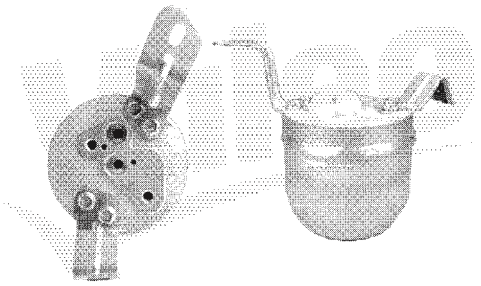

BMW 64538375754

Valeo 509395

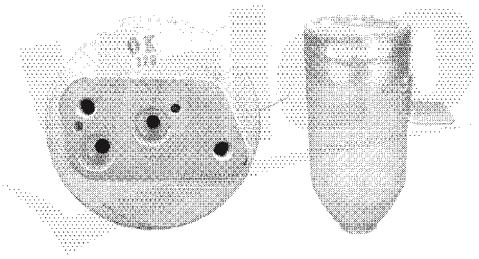

BMW 64538378683

Valeo 509392

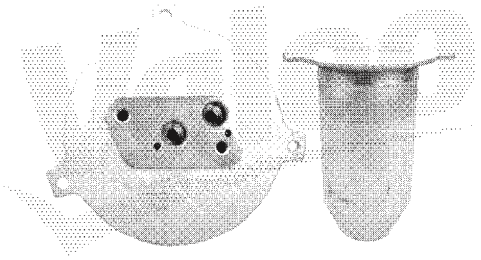

BMW 64538375760

Valeo 509396

MERCEDES 1688300458

Valeo 509393

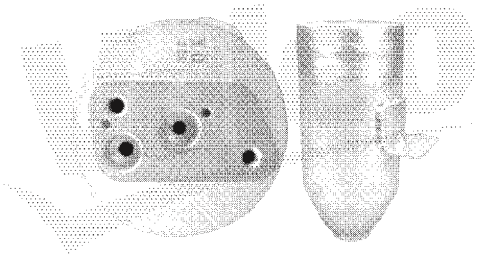

BMW 64538378684

Valeo 509400

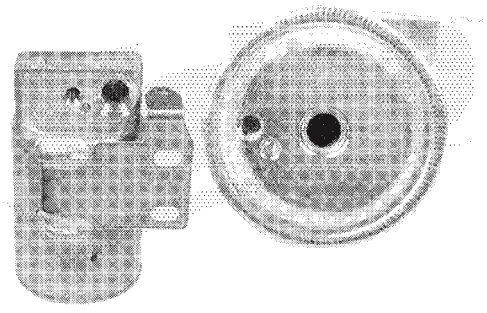

OPEL 1618150
VAUXHALL 9117400

Valeo 509401

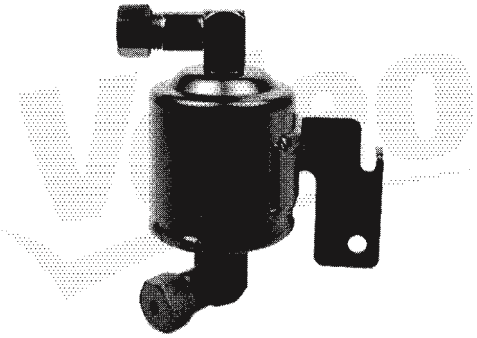

CITRÖEN	6455Z4

Valeo 509402

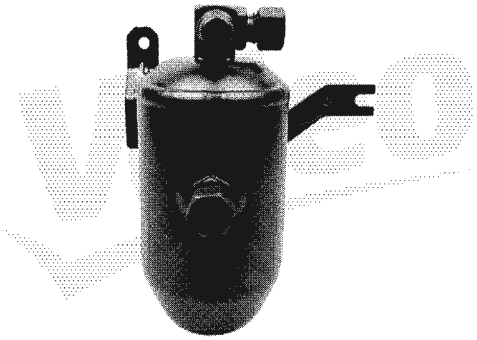

CITRÖEN	6455X7
PEUGEOT	6455X7

Valeo 509403

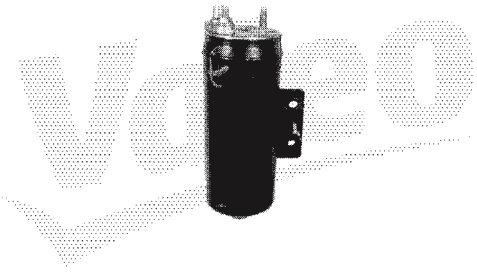

PEUGEOT	6455W8

Valeo 509404

RENAULT	7700836314

Valeo 509411

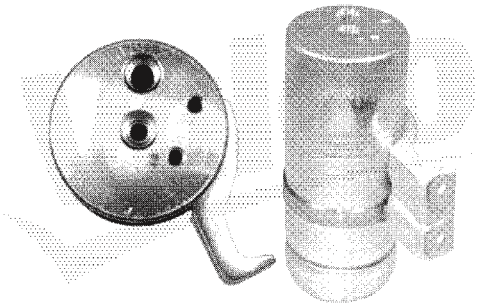

MERCEDES	1688300858

Valeo 509497

ROVER	JRJ100670

Valeo 509498

ROVER	JRJ100660

Valeo 509499

LAND ROVER	JRJ100760

509500

RENAULT 8200112833

509501

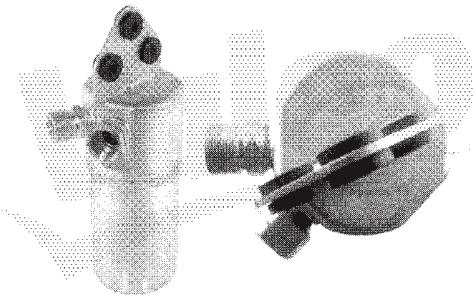

AUDI 8D0820193
VOLKSWAGEN 8D0820193

509502

FORD 1062340

509503

FORD 1152392

509524

KIT

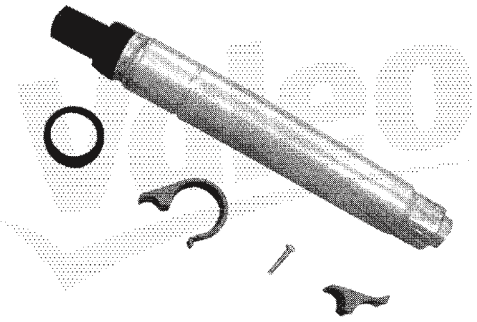

CITRÖEN 6455AK

509525

KIT

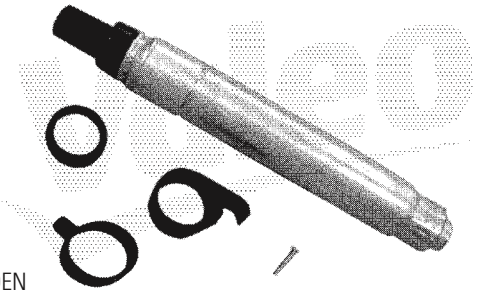

CITRÖEN 6455AJ
FIAT 1488334080
LANCIA 1488334080
PEUGEOT 6455AJ

509527

KIT

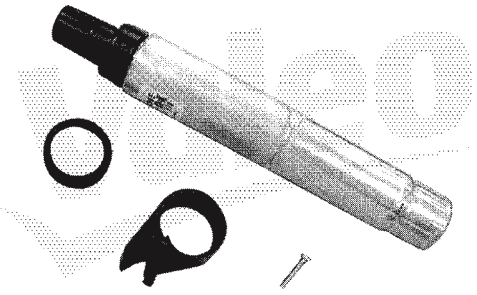

MINI 64506917489

509528

KIT

LAND ROVER JRJ100410

Valeo 509529

KIT

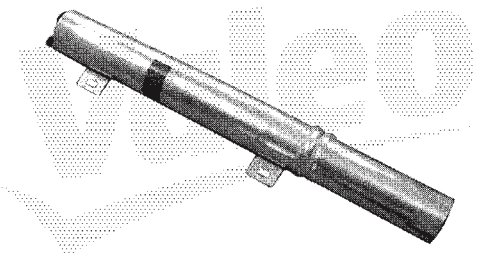

MERCEDES 2118350047

Valeo 509560

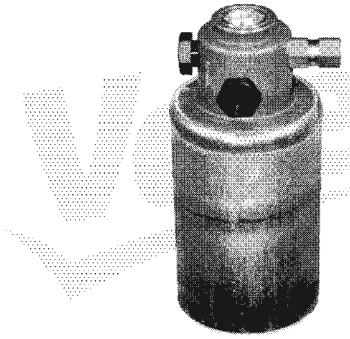

MERCEDES 9015500080

Valeo 509549

CHRYSLER 5017441AA

Valeo 509562

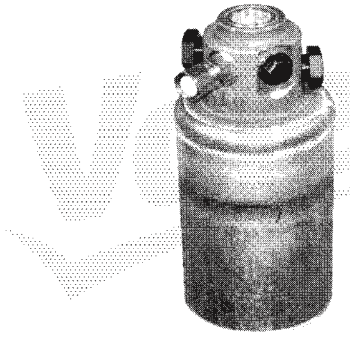

MERCEDES 9015500180

Valeo 509558

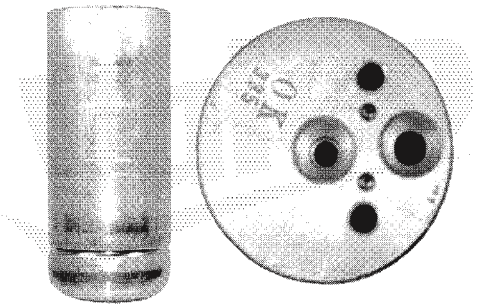

BMW 64538377330

Valeo 509563

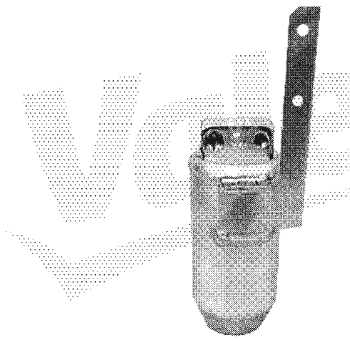

OPEL 1618051

Valeo 509559

MERCEDES 2208300083

Valeo 509564

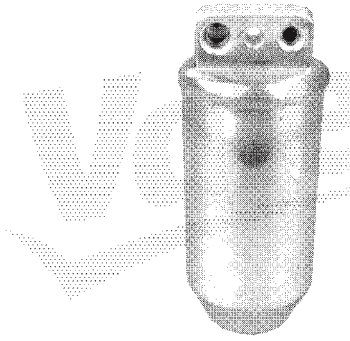

OPEL 1618193
VAUXHALL 52484491

Valeo 509565

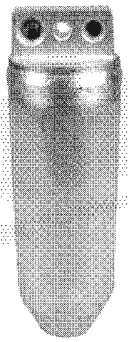

OPEL	1618010

Valeo 509566

LAND ROVER	JRJ100550

Valeo 509567

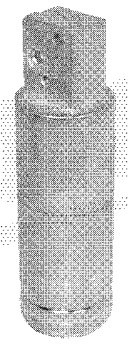

SAAB	4759072

Valeo 509568

VOLVO	30621525
VOLVO	30621526

Valeo 509569

VOLVO	9166174

Valeo 509570

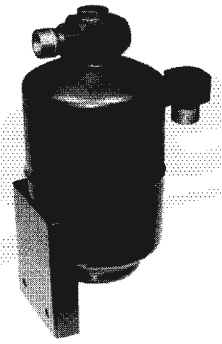

VOLKSWAGEN	253260633E

Valeo 509589

FIAT	46745058

Valeo 509590

RENAULT	8200017628

Valeo 509591

OPEL	1848000
VAUXHALL	9165715

Valeo 509592

FIAT	46811665
LANCIA	46811665

Valeo 509593

FORD	1151378
SEAT	7M3898191
VOLKSWAGEN	7M3898191

Valeo 509594

SEAT	6Q0820193A
SKODA	6Q0820193A
VOLKSWAGEN	6Q0820193A

Valeo 509606

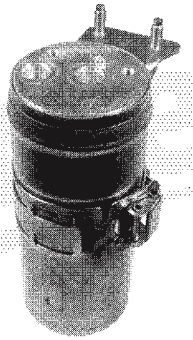

FIAT	46804655

Valeo 509689

CITRÖEN	6455Z0

Valeo 509690

LAND ROVER	AWR1374

Valeo 509691

OPEL	1618242
VAUXHALL	93170609

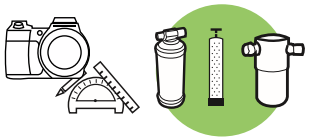

509692

OPEL	1848044
SAAB	24418368
VAUXHALL	24418368

509693

OPEL	1848045
SAAB	24418371
VAUXHALL	24418371

509695

FORD	3743793
FORD	1118718

509696

FORD	1138446

509701

RENAULT	8200071647

509704

AUDI	4B0820193A

509705

CITRÖEN	6455CF

509706

FORD	1121178
FORD	1095826

Valeo 509709

NISSAN	921304M400

Valeo 509712

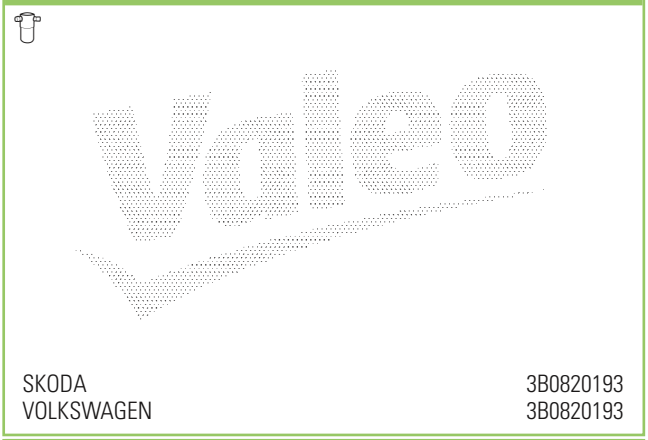

SKODA	3B0820193
VOLKSWAGEN	3B0820193

Valeo 509714

FIAT	46481438

Valeo 509716

MERCEDES	2108300383

Valeo 509717

MERCEDES	1708300083

Valeo 509718

RENAULT	8200296433

Valeo 509719

RENAULT	8200052125

Valeo 509720

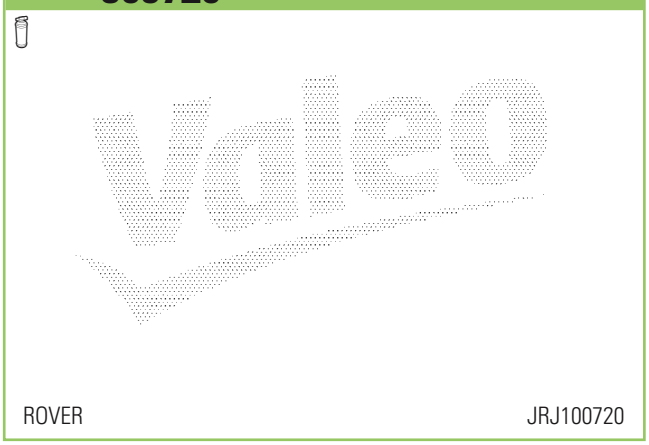

ROVER	JRJ100720

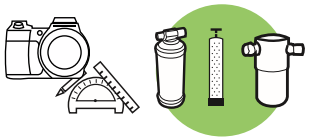

509721

ROVER	JRJ100710

509790

KIT

AUDI	1K0298403A
SEAT	1K0298403A
SKODA	1K0298403A
VOLKSWAGEN	1K0298403A

509727

RENAULT	8200025640

509791

CITRÖEN	6455AH
PEUGEOT	6455AH

509728

KIT

VOLKSWAGEN	7D0820191

509792

RENAULT	7700436061

509733

AUDI	8D0820193A

509793

RENAULT	8200247360

Valeo 509794

LEXUS	8847447010
TOYOTA	8847447010

Valeo 509892

HYUNDAI	9780225000

Valeo 509795

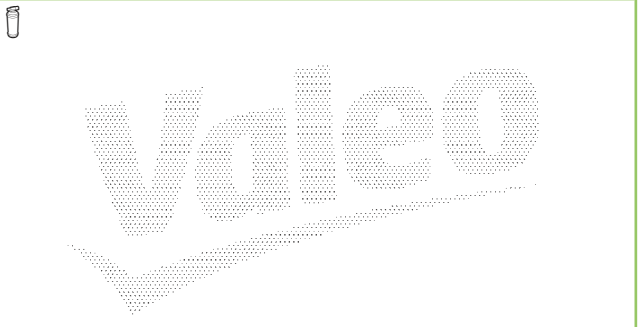

CITRÖEN	6455AE
PEUGEOT	6455AE

Valeo 509893

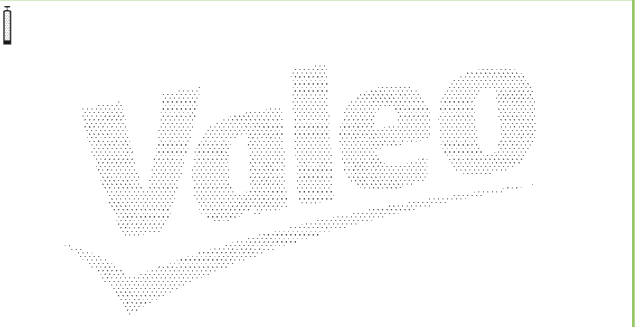

MERCEDES	2038350147

Valeo 509890

DAEWOO	96160606
DAEWOO	96225633

Valeo 509907

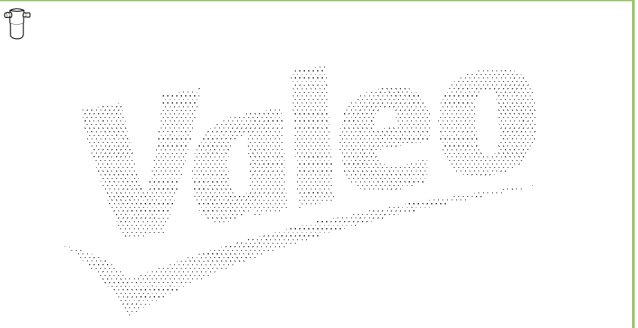

AUDI	8E0820193E

Valeo 509891

HYUNDAI	9780102000

Valeo 509909

RENAULT	8200352288

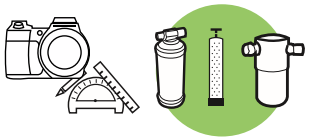

Valeo 509916

BMW	64536942025

Valeo 509924

MAZDA	BP4K61501

Valeo 509919

FORD	1354643
FORD	1223457

Valeo 509925

KIT

MAZDA	GJ6A61501A

Valeo 509920

KIT

ALFA ROMEO	71737165

Valeo 509926

MERCEDES	6398350547
VOLKSWAGEN	3C0898191

Valeo 509922

DAEWOO	96512886

Valeo 509927

KIT

NISSAN	92131BV000

Valeo 509928

KIT

NISSAN	92131BM405

Valeo 509929

OPEL	1618304
VAUXHALL	93177218

Valeo 509930

SAAB	4868949

Valeo 509931

AUDI	8Z0820193B

Valeo 509933

KIT

ALFA ROMEO	71748263

Valeo 509934

FORD	1148935
FORD	1148792
MAZDA	DE94615A0

Valeo 509935

BMW	64536936557

Valeo 509936

BMW	64536907402

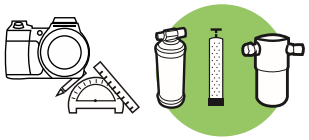

Valeo 509937

KIT

CHRYSLER	5137694AA

Valeo 509938

DACIA	6001548601

Valeo 509941

FORD	1002142

Valeo 509944

JAGUAR	XR88040

Valeo 509945

KIT

KIA	978013E000

Valeo 509946

KIT

KIA	1K52Y61E02

Valeo 509947

NISSAN	921312F000
NISSAN	921312F600

Valeo 509948

NISSAN	921312J966

Valeo 509949

OPEL	1618308

Valeo 509957

NISSAN	2764000QAA
OPEL	4408038
RENAULT	8200004174
VAUXHALL	91166604

Valeo 509951

OPEL	1848049

Valeo 815963

DAF	1290592

Valeo 509954

RENAULT	8200119657

Valeo 815964

DAF	1321891

Valeo 509956

VOLKSWAGEN	2D0820191

Valeo 815966

IVECO	98482342

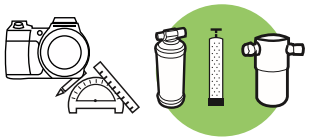

Valeo 815967

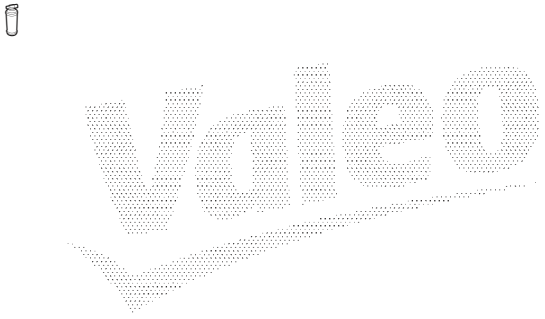

RENAULT	5010320194

Valeo 815968

RENAULT	5010144817

Valeo 815969

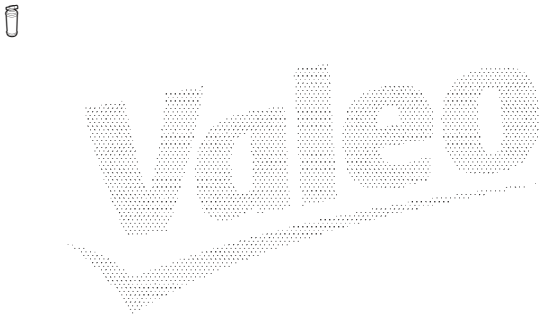

SCANIA	1337496

Valeo 815970

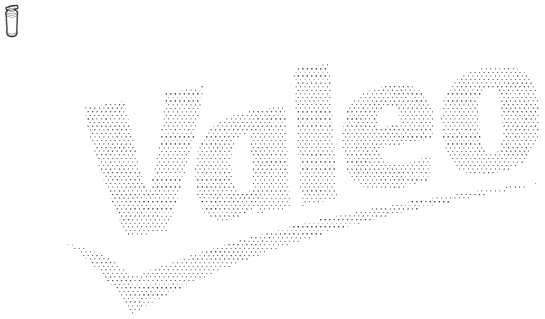

VOLVO	1618848

Valeo 815971

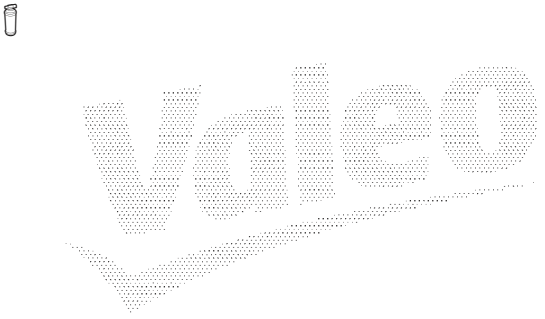

MAN	0008301783
MERCEDES	81619106012

Valeo 815972

MAN	81619106017

Valeo 815973

MERCEDES	9700300283

Valeo 815974

MERCEDES	0008301883

Valeo 815975

MERCEDES 0008302083

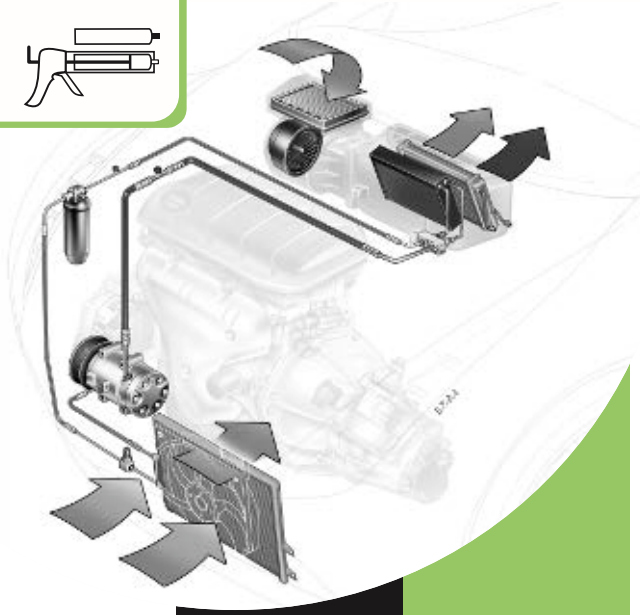

REFRIGERANT OIL
HUILE FRIGORIGENE
KOMPRESSORÖL
ACEITE DE CLIMATIZACION
OLEO DE CLIMATIZAÇÃO
OLIO DI REFRIGERAZIONE
KOELMIDDEL OLIE
OLEJ SPRĘŁARKOWY PAG
ХЛАДОҐЕНТ
PAG OLEJ
ULEI FRIGORIFIC
SOGUTUCU YAG
Ψυκτικό λάδι

2.4

EN

Function
The refrigerant oil is essential for the performance and longevity of A/C loop. It lubricates moving parts, in order to prevent seizing the compressor. It also cools the compressor, reinforcing the sealing of the components, evacuating impurities.
It is specific to each compressor type and car application.

Replacement
To be used in each maintenance and repare operation on A/C loop.
Typical problems linked to refrigerant oils :
- Use of inappropriate type of refrigerant oil
- Lack / excess of refrigerant oil
- Internal corrosion due to the presence of humidity in the circuit
- Circuit blocked (filter dryer clocked and expansion valve blocked)

Repair recommendations
- Choose the compatible refrigerant oils depending on compressor type, fluid and car application (type, quantity and viscosity).
- Use Valeo technical cross-lists (compressor section and gas data per carmaker) for precise selection.
- On each intervention, the oil should not remain open to ambient air.
- It is essential to add oil when:
  -> refilling the A/C loop with refrigerant gas (15 cc)
  -> replacing the condenser (20 cc)
  -> replacing the compressor (check quantity on catalogue)
  -> replacing the receiver dryer / Hoses (15 cc)
  -> replacing the accumulator (50 cc)
  -> replacing the evaporator (30 cc)
- Use new seals and o'rings when replacing any component of the A/C Loop

FR

Fonction
L'huile frigorigène est essentielle pour le bon fonctionnement et la longévité du système. Elle lubrifie les composants mobiles et prévient ainsi le serrage du compresseur. Elle permet aussi de refroidir le compresseur, de maintenir l'étanchéité des joints et des raccords et de transporter les impuretés vers le filtre.
A chaque type de compresseur correspond une huile spécifique.

Remplacement
A utiliser à chaque opération de maintenance.
Problèmes liés à une mauvaise utilisation:
Attention à injecter la quantité et le type d'huile préconisés.
Dans le cas contraire, les problèmes suivants peuvent survenir:
- Corrosion interne des composants
- Serrage du compresseur
- Blocage du filtre déshydratant et/ou blocage du détendeur, orifice calibré

Recommendations Valeo pour la Réparation
- Choisir la bonne référence d'huile frigorigène : correspondante au véhicule et au compresseur (Quantité, Type, Viscosité)
- Utiliser la base de données Valeo (section compresseur et base gaz par constructeur) pour la sélection
- A chaque intervention, l'huile ne doit pas être exposée à l'air ambiant.
- Il est important d'ajouter de l'huile lors du (quantité à ajouter) :
  -> Vidange et remplissage du circuit (15 cc)
  -> Remplacement du condenseur (20 cc)
  -> Remplacement du compresseur (vérifier la quantité sur le catalogue)
  -> Remplacement du filtre déshydratant(15 cc)
  -> Remplacement de l'accumulateur (50 cc)
  -> Remplacement de l'évaporateur (30 cc)
- Remplacer les joints à chaque changement de composants.

DE

Funktion
Das Kompressoröl leistet einen unverzichtbaren Beitrag zur Leistungsfähigkeit und Langlebigkeit des Klimasystems. Es wird für die beweglichen Teile verwendet, wobei es insbesondere das Blockieren des Kompressors verhindert, den Kompressor kühlt, die Dichtungen der Bauteile schmiert und Schmutz evakuiert.
Für jeden Kompressortyp und jede Fahrzeuganwendung ist ein spezielles Kompressoröl vorgesehen.

Austausch
Anwendung: bei jedem Wartungs- und Reparatureingriff am Klimakreislauf.
Häufige Probleme im Zusammenhang mit Kompressorölen:
- Verwendung einer ungeeigneten Kompressorölsorte
- Zu wenig / zu viel Kompressoröl
- Korrosion im Innern des Kreislaufs aufgrund von Feuchtigkeit
- Blockierung des Kreislaufs (Verstopfung des Filtertrockners und Blockierung des Drosselventils)

Reparaturempfehlungen
- Verwenden Sie nur die spezifischen Kompressoröle, die mit dem Kompressortyp, dem Medium und der Fahrzeuganwendung kompatibel sind (Typ, Menge und Dickflüssigkeit).
- Verwenden Sie zur gezielten Wahl die Valeo-Vergleichsliste (Kompressordurchmesser und Gasmerkmale nach Automobilhersteller)
- Achten Sie bei jedem Eingriff darauf, dass das Öl nicht längere Zeit der Umgebungsluft ausgesetzt wird
- In folgenden Fällen sollte unbedingt Öl nachgefüllt werden (nachzufüllende Menge) :
  -> die Menge nachfüllen, die von der Servicestation abgesaugt wurde (siehe Auffangbehälter an der Servicestation)
  -> Auswechseln des Kondensators (20 cc)
  -> Auswechseln des Kompressors (Menge: siehe Katalog)
  -> Auswechseln des Trockners / der Schläuche (15 cc)
  -> Auswechseln des Akkumulators (50 cc)
  -> Auswechseln des Verdampfers (30 cc)
- Beim Auswechseln von Bauteilen des Klimakreislaufs sind grundsätzlich neue Dichtungen und O-Ringe zu verwenden

SP

Función
El aceite refrigerante es esencial para la eficacia y la duración del circuito de climatización. Lubrica las piezas móviles para evitar el gripaje del compresor y también enfría el compresor, refuerza el sellado de los componentes y evacua las impurezas.
Es específico para cada tipo de compresor y aplicación del vehículo.

Sustitución
Utilizar en cada operación de mantenimiento y reparación del circuito de climatización.
Problemas típicos relacionados con los aceites refrigerantes:
- Uso de un tipo inadecuado de aceite refrigerante.
- Falta o exceso de aceite refrigerante.
- Corrosión interna debida a la presencia de humedad en el circuito.

Recomendaciones para la reparación
- Elegir únicamente aceites refrigerantes específicos compatibles según el tipo de compresor, fluido y aplicación (tipo, cantidad y viscosidad).
- Utilizar la lista técnica de Valeo (sección de compresores y datos de gas por constructor de vehículo) para una selección precisa.
- En cada intervención, el aceite no debe exponerse al aire ambiente.
- Es esencial añadir aceite cuando: (cantidad a añadir)
  -> se recarga el circuito de climatización con gas refrigerante (15 cc)
  -> se reemplaza el condensador (20 cc)
  -> se reemplaza el compresor (verificar la cantidad en el catálogo)
  -> se reemplaza la botella y las tuberías (15 cc)
  -> se reemplaza el acumulador (50 cc)
  -> se reemplaza el evaporador (30 cc)
- Utilizar juntas nuevas al sustituir cualquier componente del circuito de climatización.

IT

Funzione
L'olio refrigerante è indispensabile per il rendimento e la longevità del circuito di climatizzazione. Lubrifica il compressore evitandone il grippaggio . Inoltre permette di: raffreddare il compressore, rinforzare la tenuta dei componenti ed eliminare le impurità. Per ogni compressore e modello di auto esiste un olio specifico.

Sostituzione
Per la sostituzione dell'olio è necessario effettuare la procedura di lavaggio.
Problemi più frequenti relativi all'olio refrigerante:
- Uso di un tipo di Olio refrigerante non adeguato
- Olio refrigerante insufficiente / in eccesso
- Corrosione interna dovuta alla presenza di acido (umidità nel circuito)
- Ostruzione del circuito (filtro disidratatore intasato e valvola d'espansione bloccata)
- Olio molto scuro e denso (si consiglia il lavaggio del circuito)

Raccomandazioni Valeo per la riparazione
Scegliere un olio refrigerante compatibile specifico in base al tipo di compressore, al liquido e al veicolo (tipo, quantità e viscosità).
Utilizzare la cross-list tecnica Valeo (sezione compressore e dati gas per costruttore di veicolo) per una scelta corretta.
- Ad ogni intervento, l'olio non deve rimanere aperto e in contatto con l'aria.
- È importante aggiungere olio quando (quantità):
-> si ricarica il circuito A/C con gas refrigerante (quantità recuperata)
-> si sostituisce il condensatore (20 cc)
-> si sostituisce il compressore (fare il lavaggio verificare la quantità sul catalogo)
-> si sostituisce il filtro disidratatore / canalizzazioni AC (15 cc)
-> si sostituisce l'accumulatore (50 cc)
-> si sostituisce l'evaporatore (30 cc)
- Utilizzare nuove guarnizioni e nuovi o'ring quando si sostituisce qualsiasi componente del circuito A/C

NL

Functie
De koelmiddel olie is essentieel voor de goede werking en de lange levensduur van het airconditioningsysteem. De olie smeert de bewegende delen om te voorkomen dat de compressor vastloopt en zorgt bovendien voor de koeling van de compressor, versterkt de afdichting van de onderdelen en voert verontreinigingen af.
Er is een specifieke olie voor ieder type compressor en voertuig.

Vervanging
Gebruiken bij alle onderhouds- en reparatiewerkzaamheden aan het airconditioningsysteem.
Problemen die het meest voorkomen in verband met koelmiddel olie:
- Gebruik van een ongeschikt type koelmiddel olie
- Te weinig / te veel koelmiddel olie
- Inwendige corrosie veroorzaakt door vocht in het systeem
- Systeem geblokkeerd droger filter verstopt en expansieventiel geblokkeerd

Aanbevelingen bij de reparatie
- Kies de geschikte koelmiddel olie uitsluitend aan de hand van het type compressor, vloeistof en voertuig (type, hoeveelheid en viscositeit).
- Gebruik de Valeo lijst met technische verwijzingen (hoofdstuk compressor- en gasgegevens per autoconstructeur) voor de juiste keus.
- Bij elke toepassing mag de olie nooit worden blootgesteld aan lucht.
- De olie moet worden bijgevuld na (bij te vullen hoeveelheid) :
  -> het opnieuw vullen van het airconditioningsysteem met koelmiddel-gas (15 cc)
  -> het vervangen van de condensor (20 cc)
  -> het vervangen van de compressor (zie catalogus voor de hoeveelheid)
  -> het vervangen van de vochtafscheider / buizen (15 cc)
  -> het vervangen van de accumulator (50 cc)
  -> het vervangen van de verdamper (30 cc)
- Gebruik nieuwe afdichtingen en O-ringen wanneer u onderdelen van het airconditioningsysteem vervangt.

PL

Funkcja
Olej chłodniczy ma zasadnicze znaczenie dla wydajności i długowieczności układu A/C. Smaruje ruchome części, w celu uniknięcia zatarcia sprężarki. Ponad to chłodzi kompresor, poprawia szczelność elementów układu, eliminuje zanieczyszczenia.
Każdy rodzaj sprężarki i typ samochodu wymaga specyficznego rodzaju oleju.

Wymiana
Stosować przy każdej obsłudze i naprawie układu A/C.
Typowe problemy związane z olejami PAG:
- Zastosowanie niewłaściwego typu oleju PAG
- Niedobór / nadmiar oleju
- Wewnętrzna korozja na skutek obecności wilgoci w układzie
- Układ zablokowany (filtr osuszacz zatkany i zawór rozprężny zablokowany)

Zalecenia naprawy
- Wybierz odpowiedni olej w zależności od typu sprężarki, czynnika chłodniczego i rodzaju samochodu (rodzaj, ilość i lepkość).
- Użyj listy zamienników technicznych Valeo (sekcja z kompresorami i informacja o ilości gazu dla poszczególnych pojazdów) w celu dokonania precyzyjnego wyboru.
- Przy każdej interwencji, olej nie powinien zbyt długo pozostawać otwarty i poddawany działaniu powietrza atmosferycznego.
- Istotne jest, aby uzupełnić olej, gdy przeprowadzane jest:
-> Napełnianie układu A/C czynnikiem chłodniczym (15 cc)
-> Wymiana skraplacza (20 cc)
-> Wymiana sprężarki (sprawdzić ilość w katalogu)
-> Wymiana osuszacza / Przewodów (15 cc)
-> Wymiana filtra zasobnika (50 cc)
-> Wymiana parownika (30 cc)
- Używać nowych uszczelek i oringów przy wymianie jakiegokolwiek elementu układu A/C.

RU

Функция
Масло для хладагента обязательно для высокой производительности и продолжительного срока службы системы кондиционирования воздуха.
Оно смазывает подвижные части, чтобы предотвратить заклинивание компрессора. Оно также охлаждает компрессор, усиливая уплотнение компонентов и удаляет загрязнения.
Тип хладагента зависит от типа компрессора и автомобиля.

Замена
Используется при каждом обслуживании и ремонте системы кондиционирования воздуха.
Типичные проблемы с маслом для хладагента:
- Использование неправильного типа масла
- Недостаток / избыток масла
- Внутренняя коррозия из-за влажности в системе
- Блокировка цепи (фильтр-влагоотделитель засорился и расширительный клапан заблокирован)

Рекомендации по ремонту
- Выбрать подходящее масло для хладагента в зависимости от типа компрессора, жидкости и типа автомобиля
(тип, количество и вязкость).
- Использовать технические кросс листы Valeo (раздел компрессоров и характеристики газа по производителям автомобилей) для точного
выбора.
- При любых работах масло не должно контактировать с воздухом.
- Крайне важно добавлять масла в следующих случаях:
-> дозаправка хладагента в систему кондиционирования воздуха (15 см3)
-> замена конденсатора (20 см3)
-> замена компрессора (проверить количество по каталогу)
-> замена осушителя / шлангов (15 см3)
-> замена сборника (50 см3)
-> замена испарителя (30 см3)
- Использовать новые прокладки и кольцевые уплотнения при замене компонентов системы кондиционирования воздуха

CZ

Funkce
Kompresorový olej je důležitý pro dobrý výkon a vysokou životnost okruhu klimatizace. Maže pohybující se díly a zamezuje tak zadření kompresoru či expanzního ventilu. Také chladí kompresor, zajišťuje utěsnění komponentů a „odplavení“ nečistot.
Je specifický pro každý typ kompresoru i chladiva použitého ve vozidle.

V měna
Je důležitá při každé údržbě a opravě okruhu klimatizace.
Typické problémy spojené s kompresorov m olejem:
- Používejte pouze vhodný typ kompresorového oleje
- Zamezte přílišnému nebo nedostatečnému množství kompresorového oleje
- Interní koroze může vznikat přítomností vlhkosti v okruhu
- Zablokování okruhu (vysoušecí filtr je ucpán a expanzní ventil je zablokován)

Doporučení pro opravy
- Zvolte odpovídající kompresorový olej v závislosti na typu kompresoru, typu chladiva a použití ve vozidle (typ, množství a viskozita).
- Použijte technický seznam (výběr kompresoru a ostatních dat podle výrobců vozidel) pro bezchybný výběr.
- Po každém použití oleje jej opět pečlivě uzavřete, aby nebyl v kontaktu s vzdušnou vlhkostí!
- Je důležité přidat olej když se provádí:
  - plnění okruhu klimatizace chladivem (15 cc)
  - výměna kondenzátoru (20 cc)
  - výměna kompresoru (množství překontrolujte v katalogu)
  - výměna vysoušeče/trubek (15 cc)
  - výměna akumulátoru (50 cc)
  - výměna výparníku (30 cc)
- Při výměně komponentů v okruhu klimatizace použijte nová těsnění a O-kroužky.

HU

Szerepe
A klímaolaj biztosítja az egész rendszer teljesítményét és élettartamát. Lubrifikálja a mozgó alkatrészeket, elsősorban a kompresszort. Másodsorban hűti a kompresszort, megerősíti a tömítéseket és megköti a szennyeződéseket.
Az olaj típusa kompresszor/jármű szerint változik.

Cseréje
A klímaolaj cseréje a rendszeres karbantartás és minden egyes klímaalkatrész javítás elengedhetetlen része.
Gyakran el forduló meghibásodások:
- Nem megfelelő típusú klímaolaj használata.
- Túl kevés / túl sok klímaolaj van a rendszerben.
- Belső korrózió a rendszerben található nedvesség miatt
- Dugulások a rendszerben (szárító szűrő vagy expanziós szelep)

Javítási tanácsok
- Válassza a megfelelő olajt a kompresszor, hűtőközeg típusa, jármű alapján (típus, mennyiség és viszkozitás)
- A pontos választásban segít a Valeo katalógusban található technikai táblázat (kompresszor és jármű típus alapján).
- Az olaj ne érintkezzen hosszabb ideig a környező levegővel.
- Az olajat a következő esetekben szükséges utántölteni:
  - hűtőközeg lefejtés és visszatöltés (15 ml)
  - klímahűtő cseréje (20 ml)
  - kompresszor cseréje (típusfüggő, pontos mennyiség a katalógusban)
  - szárítószűrő vagy csövek cseréje (15 ml)
  - akkumulátoros szárítószűrő cseréje (50ml)
  - párologtató cseréje (30 ml)
- Mindig használjon új gyűrűket és alátéteket, ha a klímarendszer valamelyik alkatrészét kicseréli.

RO

Funcţiune:
Uleiul refrigerant este esenţial pentru buna performanţă şi longevitatea sistemului de aer condiţionat. Lubrifiază părţile mobile şi astfel previne blocarea compresorului. De asemenea răcește compresorul, consolidând racordurile pieselor şi evacuând impurităţile

Este specific fiecărui tip de compresor şi fiecărei folosinţe de maţină.

Înlocuire:
A se folosi la orice operaţiune de întreţinere sau reparaţie a sistemului de aer condiţionat.
Probleme tipice legate de uleiurile refrigerante:
- Folosirea unui tip de ulei nepotrivit
- Lipsă / exces de ulei refrigerant
- Coroziune internă datorită prezenţei umidităţii în circuit
- Circuit blocat (filtru uscător şi ventil de extindere înfundat)

Recomandări de reparaţie:
- Alegeţi uleiul refrigerant potrivit în funcţie de tipul compresorului, de lichid şi de folosinţa maşinii (tip, calitate, viscozitate).
- Pentru o selecţie precisă folosiţi lista tehnică Valeo (secţiunea de compresoare şi date de gaz pe producător de maşini)
- În cazul oricărei intervenţii uleiul să nu fie expus aerului înconjurător.
- Trebuie adăugat ulei dacă:
  - sistemul de aer condiţionat se reîncarcă cu gaz refrigerant (15cc)
  - se înlocuieşte condensatorul (20cc)
  - se înlocuieşte compresorul (verificaţi cantitatea în catalog)
  - se face înlocuirea radiatorului climă/ furtunurilor (15 cc)
  - se înlocuieşte acumulatorul (50 cc)
  - se înlocuieşte evaporatorul (30 cc)
- Folosiţi racorduri şi inele de etanţare noi la înlocuirea oricărei părţi a sistemului de aer condiţionat.

TU

İşlev:
- Soğutucu yağ klima sisteminin performansı ve ömrü için gerekli ve çok önemli bir üründür. Tüm oynar parçaları yağlar ve kompresörü yanarak bloke olmaktan korur. Aynı zamanda kompresörü soğutur, sistem bağlantılarını güçlendirir ve kirliliği bertaraf eder.

Her kompresör ve araç uygulaması için özeldir.

Değişim:
Klima sisteminin her bakım ve tamirinde kullanılır.
Soğutucu yağ konusunda en çok rastlanan sorunlar
- Uygun olmayan tipte soğutucu yağ kullanımı
- Yetersiz ya da aşırı miktarda soğutucu yağ kullanımı
- Sistemde oluşan nem neticesi meydana gelen iç korozyon
- Tıkanmış sistem (tıkalı kurutucu ya da detantör)

Onarım önerileri:
- Kullanılan kompresör tipi, akışkan ve araç uygulamasına uygun soğutucu yağ seçiniz (tip, miktar ve akışkanlık)
- Hassas seçim için Valeo teknik çapraz listesi kullanınız (her araç üreticisi için kompresör ve gaz bilgilerini gösterir)
- Sisteme yapılan müdahelelerde soğutucu yağ ortam havasına temas etmemelidir.
- Belirtilen durumlarda soğutucu yağ eklemek gerekir:
  - Klima sisteminde yapılan akışkan değişiminde (15cc)
  - Kondenser değişiminde (20cc)
  - Kompresör değişiminde (katalogda belirtilen miktarlar kadar)
  - Kurutucu / hortum değişiminde (15cc)
  - Kurutucu fişeği değişiminde (50cc)
  - Evaporatör değişiminde (30cc)
- Klima çevriminde yer alan herhangi bir parçanın değişiminde yeni conta ve o-ringler kullanınız.

GR

Λειτουργία :
Το ψυκτικό λάδι είναι ουσιαστικής σημασίας για την απόδοση και τη μακροζωία του σύστημα. Λιπαίνει τα κινούμενα μέρη προκειμένου να εμποδίζονται οι εμπλοκές του συμπιεστή. Επίσης ψυχραίνει το συμπιεστή, ενισχύει τη στεγάνωση των εξαρτημάτων, μεταφέρει τις ακαθαρσίες στο ξηραντήρα.
Υπάρχει ειδικός τύπος λαδιού για κάθε τύπο συμπιεστή.

Αντικατάσταση :
Πρέπει να χρησιμοποιείται σε κάθε λειτουργία συντήρησης και επισκευής του κυκλώματος κλιματισμού.

Συνηθισμένα προβλήματα που συνδέονται με το ψυκτικό λάδι:
- Χρήση ακατάλληλου τύπου ψυκτικού λαδιού.
- Ελλειψη / περίσσευμα ψυκτικού λαδιού.
- Εσωτερική διάβρωση λόγω παρουσίας υγρασίας στο κύκλωμα.
- Μπλοκάρισμα κυκλώματος (ξηραντήρα φραγμένο και βαλβίδα εκτόνωσης μπλοκαρισμένη).

Συστάσεις απο την Valeo για την επισκευή :

- Επιλέξτε το σωστό λάδι ανάλογα με τον τύπο του συμπιεστή, το ψυκτικό υγρό και την εφαρμογή (τύπος, ποσότητα και πυκνότητα).
- Χρησιμοποιήστε τον κατάλογο της Valeo για να κάνετε σωστή επιλογή.
- Το λάδι δεν πρέπει να μένει ποτέ εκτεθειμένο στον αέρα του περιβάλλοντος.
- Είναι βασικό να προσθέτετε λάδι σε περίπτωση (ποσότητα που πρέπει να προσθέτετε):
  -> άδιασμα / γέμισμα του κυκλώματος με φρέον (15 cc)
  -> αντικατάσταση του συμπυκνωτή (20 cc)
  -> αντικατάσταση του συμπιεστή (βλέπε την ποσότητα στον κατάλογο)
  -> αντικατάσταση του ξηραντήρα (15 cc)
  -> αντικατάσταση του συσσωρευτή (50 cc)
  -> αντικατάσταση του εξατμιστή (30 cc)
- Οταν αντικαθιστάτε οποιοδήποτε εξάρτημα του κυκλώματος, κατόπιν να χρησιμοποιείτε καινούργια στεγανοποιητικά λαστιχάκια και τσμούχες.

	Valeo		Valeo		Qty
1 - 2 - 3 **Huile frigorigène** **Refrigerant oil** **Schmiermittel** **Aceite de climatización** **Olio di refrigerazione** **Olie** **Olej sprę arkowy** **kışkan yağları** **4** **Fluide traceur** **Dye cartridge** **Kontrastmittel zur lecksuche** **Líquido trazador** **Tracciante** **Lekdetectiemiddel** **Kontrast UV** **Kaçak arama sıvısı**		1 2 3 4	699935 699936 699937 699934	PAG46 240 ml R134a PAG100 240ml R134a PAG125 240ml R134a 240ml R12/R134a	1 1 1 1
Kit injecteur huile **Oil injection Kit** **Öleinfüllgerät** **Kit de inyección de aceite** **Kit iniezione olio** **Olie injectie set** **Zestaw do wtryskiwania oleju** **Yağ enjeksiyon kiti** **699933** 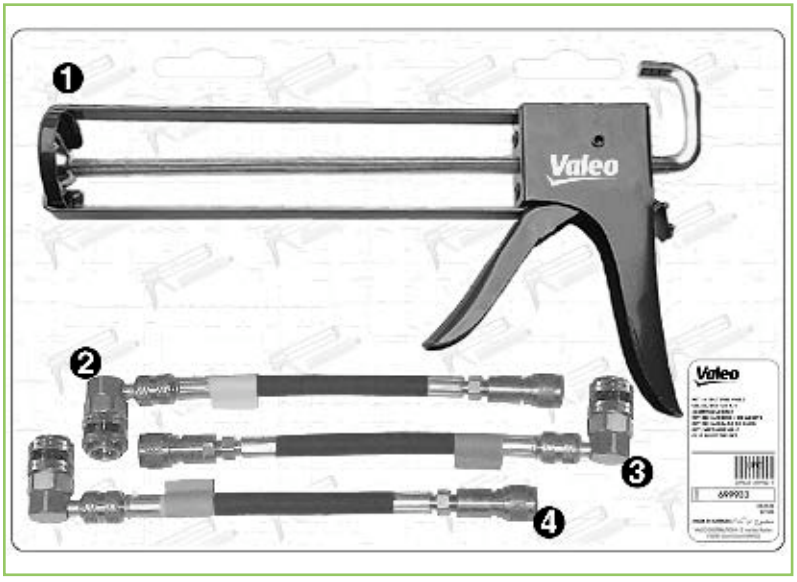		1	699962	Pistolet d'injection Injection gun Injektionswerkzeug Pistola de inyección Iniettore Injectie pistool Pistolet do wstrzykiwania Enjeksiyon tabancası	1
		2	698966	(1) PAG46cst Jaune Yellow Gelb Amarillo Giallo Geel Żółty Sarı	1
		3	698966	(2) PAG100cst Vert Green Grün Verde Verde Groen Zielony Yeşil	1
		4	698966	(3) PAG125cst Bleu Blue Blau Azul Blu Blauw Niebieski Mavi	1

Valeo		Valeo		Qty
699932 **Kit fluide traceur** **Leak detection kit** **Lecksuchgerät** **Kit de detección de fugas** **Kit tracciante** **Injectiekit voor lekdetectie** **Zestaw do wstrzykiwania kontrastu UV** **Kaçak arama kiti** 	1	**699962**	Pistolet d'injection Injection gun Injektionswerkzeug Pistola de inyección Iniettore Injectie pistool Pistolet do wstrzykiwania Enjeksiyon tabancası	1
	2		R12 / R134a	1
	3	**698966**	Raccord Coupling Injektionsleitung Racord Raccordo Koppelingen Złącze Adaptör	1
	4	**699934**	Fluide traceur Dye cartridge Kontrastmittel zur Lecksuche Líquido trazador Tracciante Lekzoek Kontrast UV Kaçak arama sıvısı	1
710064 **Kit d'injection de fluide traceur avec cartouches monodoses** **Injection kit with leak detection monodoses cartridges** **Injektionskit mit UV-Kartuschen** **Kit de inyección de detector de fugas con cartuchos monodosis** **Kit iniezione fluido tracciante con cartucce monodose** **Injectiekit voor lekdetectieMet cartridges 7.5ml** **Zestaw do pojedynczego dozowania kontrastu UV 7,5 ml** **Tek doz kaçak kontrol kiti** 		**710064**		**1**
710065 **6 cartouches de 7.5 ml de fluide traceur** **6 x 7.5 ml UV dye cartridges** **6 x 7,5 ml UV-Kartuschen** **6 cartuchos que contienen 7.5 ml de fluido trazador** **6 cartucce di flluido tracciante da 7.5 ml** **6 x 7,5 ml UV lekdetectie vloeistof cartridges** **6 pojemników x 7,5 ml kontrastu UV** **6 x 7.5 ml UV sıvı kartuşları** 		**710065**		**1**

	Valeo		Valeo		Qty
Kit lampe UV luxeon UV Lamp Luxeon kit Luxeon UV Lampe kit Kit lámpara UV Luxeon Kit Lampada UV Luxeon Kit luxeon UV lamp Kit lampa UV Luxeon Kit luxeon UV lamba Zestaw lampa UV + okulary	**710066**		**710066**		1
Nettoyant traceur Dye cleaner Reinigungsmittel für UV-Lecksuchmittel Limpiador de detector de fugas Pulitore tracciante UV UV dye cleaner Zmywacz kontrastu UV UV sıvı temizleyici	**710067**		**710067**		1

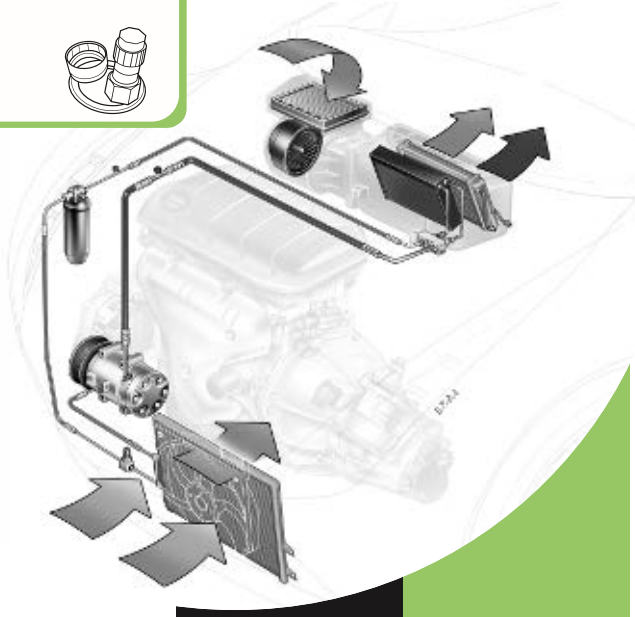

2.5

O'RING AND GASKET SEALS

JOINT D'ÉTANCHÉITÉ

O-RINGE & DICHTUNGEN

JUNTAS DE ESTANQUEIDAD

JUNTAS DE ESTANQUECIDADE

O'RING E GUARNIZIONI DI TENUTA

PAKKINGEN

ORINGI I USZCZELKI

Прокладки И Сальники

TĚSNĚNŽA TĚSNŽCŽKROUžKY

GARNITURĂ

ORING VE DÜZ CONTALAR

Στεγανοποιητικά

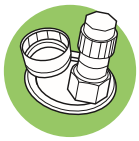

Valeo

KIT DE JOINTS D'ÉTANCHÉITÉ UNIVERSEL
UNIVERSAL DICHTUNGSSATZ
KIT DE JUNTAS DE ESTANQUECIDADE UNIVERSAL
DICHTINGEN SET UNIVERSAL

UNIVERSAL O'RING AND GASKET SEALS KITS
KIT DE JUNTAS DE ESTANQUEIDAD UNIVERSAL
KIT ORING E GUARNIZIONI DI TENUTA UNIVERSALE
KIT DE GARNITURI UNVERSAL

UNIWERSALNE ZESTAWY ORING W I USZCZELEK

Valeo

509724

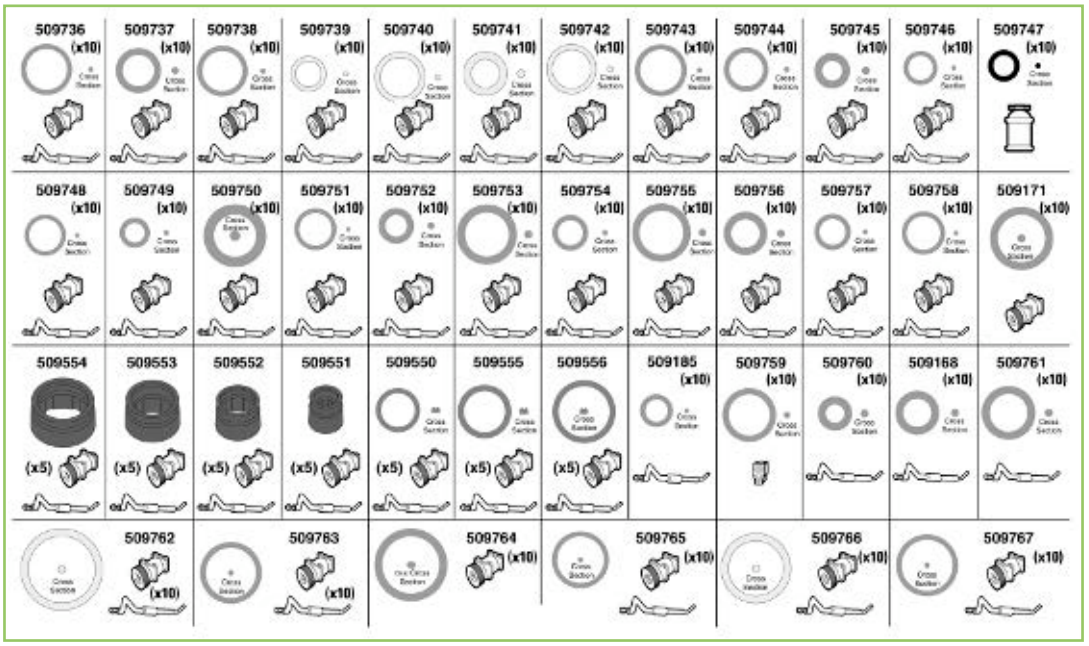

Valeo	
509168	BMW / GM / OPEL-VAUXHALL SAAB / VOLVO
509171	ALFA ROMEO/ BMW
509185	FORD / JAGUAR
509550	RENAULT
509551	ALFA ROMEO / FIAT / IVECO LANCIA / RENAULT
509552	ALFA ROMEO / FIAT / IVECO LANCIA
509553	ALFA ROMEO / FIAT / IVECO LANCIA
509554	ALFA ROMEO / FIAT / IVECO LANCIA
509555	RENAULT
509556	RENAULT
509736	OPEL/GM
509737	CHRYSLER
509738	CHRYSLER
509739	VOLVO
509740	VOLVO
509741	VOLVO
509742	VOLVO
509743	CITROËN
509744	VW/AUDI
509745	JAGUAR
509746	JAGUAR
509747	SUBARU/MAZDA
509748	TOYOTA
509749	DAEWOO
509750	OPEL/GM
509751	TOYOTA
509752	RANGE ROVER
509753	FORD
509754	SEAT

Valeo	
509755	SEAT
509756	DAEWOO
509757	JAGUAR
509758	JAGUAR
509759	TOYOTA
509760	GM
509761	GM
509763	DAEWOO
509764	FORD
509765	CHRYSLER
509766	VOLVO
509767	CHRYSLER

Valeo	

▲ **Soon available** Disponible prochainement **Disponible próximamente** Disponiveis próximamente **Disponibili nei prossimi mesi** Binnenkort leverbaar **In Kürze lieferbar** Dostępne wkrótce **Kısa zamanda ticari olacak** ДОСТУПЕН В БЛИЖАЙШЕЕ ВРЕМЯ **Referințele disponibile în curând**

● **New** Nouveau **Nuevo** Novo **Nuovo** Nieuw **Neu** Nowość **Yeni** Новый **Nou**

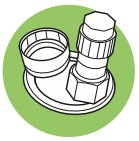

KIT DE JOINTS D'ÉTANCHÉITÉ UNIVERSEL
UNIVERSAL DICHTUNGSSATZ
KIT DE JUNTAS DE ESTANQUECIDADE UNIVERSAL
DICHTINGEN SET UNIVERSAL

UNIVERSAL O'RING AND GASKET SEALS KITS
KIT DE JUNTAS DE ESTANQUEIDAD UNIVERSAL
KIT ORING E GUARNIZIONI DI TENUTA UNIVERSALE
KIT DE GARNITURI UNVERSAL
UNIWERSALNE ZESTAWY ORING W I USZCZELEK

Valeo
509725

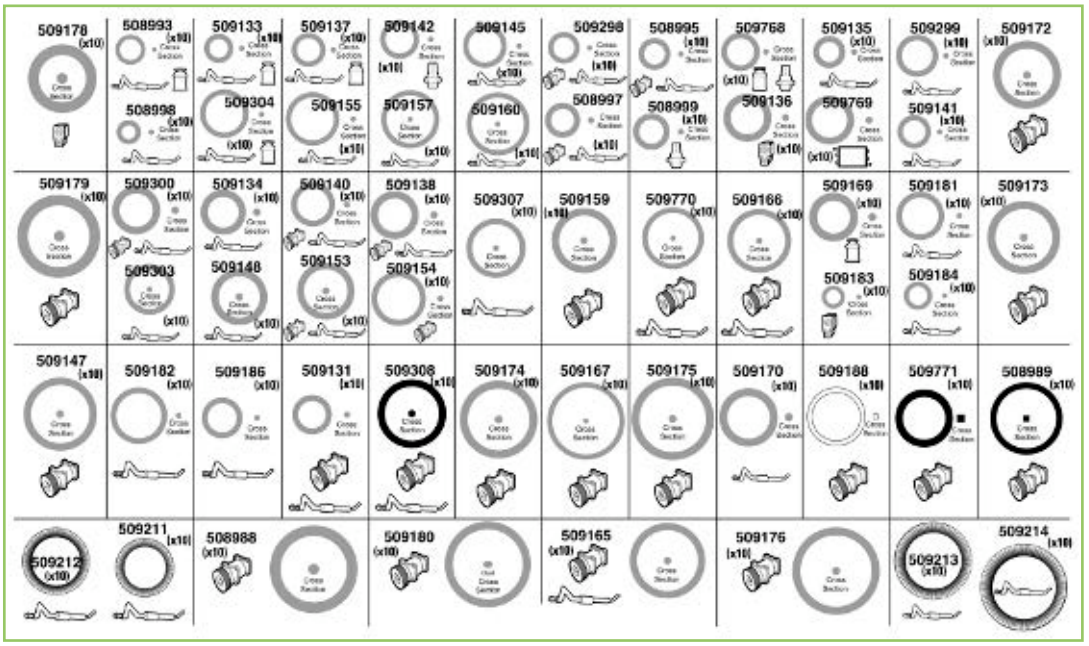

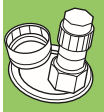

Valeo	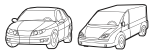
508988	GM
508989	Various Car Makers
508993	ACURA-HONDA / MAZDA TOYOTA / SAAB / VOLVO
508995	ALFA ROMEO / JAGUAR NISSAN / CALSONIC / ROVER
508997	MERCEDES / PORSCHE
508998	ALFA ROMEO / SAAB / VOLVO OPEL-VAUXHALL / VW
508999	FORD / VAG
509131	PORSCHE
509133	NISSAN / PORSCHE / ROVER
509134	MAZDA / OPEL-VAUXHALL
509135	ACURA-HONDA / MAZDA / ROVER TOYOTA / OPEL-VAUXHALL
509136	ALFA ROMEO / JAGUAR / ROVER SUZUKI
509137	ALFA ROMEO / BMW ACURA-HONDA / JAGUAR NISSAN / PSA / ROVER / SAAB OPEL-VAUXHALL / VW / VOLVO
509138	NISSAN/CALSONIC / ROVER
509140	MERCEDES
509141	MERCEDES / PORSCHE OPEL-VAUXHALL
509142	ALFA ROMEO / BMW / ROVER SAAB / VOLVO
509145	ALFA ROMEO / BMW ACURA-HONDA / JAGUAR MAZDA / MERCEDES MITSUBISHI / NISSAN / PSA ROVER / SAAB / VOLVO / TOYOTA OPEL-VAUXHALL / VW

Valeo	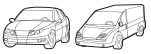
509147	OPEL-VAUXHALL
509148	NISSAN / JAGUAR / ROVER
509153	NISSAN/CALSONIC / VW
509154	MERCEDES / PORSCHE
509155	ALFA ROMEO / BMW / JAGUAR MAZDA / MITSUBISHI / NISSAN PSA / ROVER / SAAB OPEL-VAUXHALL / VW / VOLVO
509157	JAGUAR / NISSAN OPEL-VAUXHALL
509159	NISSAN/CALSONIC / VW
509160	ALFA ROMEO / BMW / NISSAN PSA / SAAB / OPEL-VAUX / VOLVO VW
509165	PORSCHE / TOYOTA
509166	MERCEDES
509167	SAAB / VOLVO
509169	BMW / OPEL-VAUXHALL
509170	ALFA ROMEO / OPEL-VAUXHALL
509172	OPEL-VAUXHALL
509173	ALFA ROMEO / OPEL-VAUXHALL
509174	Various Car Makers
509175	SAAB / VOLVO / OPEL-VAUXHALL
509176	BMW / OPEL-VAUXHALL / VW
509178	CHRYSLER / OPEL-VAUXHALL
509179	ALFA ROMEO / JAGUAR MERCEDES / NISSAN / ROVER OPEL-VAUXHALL / VW
509180	OPEL-VAUXHALL
509181	OPEL-VAUXHALL
509182	OPEL-VAUXHALL
509183	NISSAN / ROVER
509184	BMW

Valeo	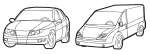
509186	OPEL-VAUXHALL
509188	Various Car Makers
509211	CHRYSLER/FORD
509212	CHRYSLER/FORD
509213	CHRYSLER/FORD
509214	CHRYSLER/FORD
509298	NISSAN/CALSONIC
509299	FORD
509300	NISSAN/CALSONIC
509303	FORD
509304	SAAB / VOLVO
509307	FORD
509308	Various Car Makers
509768	GM
509769	Various Car Makers
509770	CHRYSLER
509771	Various Car Makers

Scale 1:1, page 372 **Escala 1:1, página 372** **Scala 1:1, pagina 372** **Ölçek 1:1, sayfa 372** **Skala 1:1, strona 372**
Echelle 1:1, page 372 **Escala 1:1, página 372** **Schaal 1:1, pagina 372** **Scară 1:1, pagini 372**

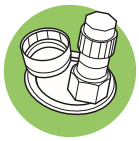

Valeo

KIT DE CAPUCHON
VERSCHLUßSTOPFENSATZ
KIT DE TAPONES
BESCHERMKAP SET
SERVICE CAP KIT
KIT DE TAPÕNES
KIT TAPPO DI PROTEZIONE
KIT DE ASTUPIŞ
ZESTAW NAKRĘTEK SERWISOWYCH

Valeo

509734

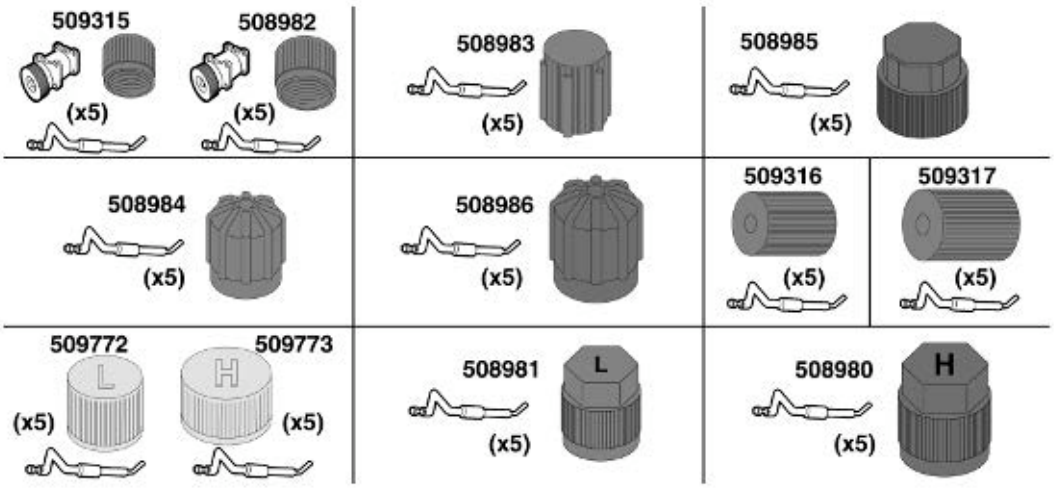

Valeo	ⓘ	
508980	M10x1.25 / HP R134a	FORD / ACURA-HONDA / HYUNDAI MAZDA / MITSUBISHI / NISSAN SUBARU / SUZUKI / TOYOTA-LEXUS VW-AUDI
508981	M9x1 / BP R134a	FORD / ACURA-HONDA / HYUNDAI MAZDA / MITSUBISHI / NISSAN SUBARU / SUZUKI / TOYOTA-LEXUS VW-AUDI
508982	1/4" / R12	ALFA ROMEO / BMW / CHRYSLER FIAT / FORD / MERCEDES OPEL-VAUXHALL / PSA / PORSCHE RENAULT / ROVER VOLKSWAGEN-AUDI / VOLVO
508983	M8x1 / BP R134a	CHRYSLER / EUROTRUCK / FIAT HYUNDAI / JAGUAR / MAZDA MITSUBISHI / OPEL/VAUXHALL RENAULT / SUZUKI / TOYOTA/LEXUS VOLKSWAGEN-AUDI
508984	M8x1 / BP R134a	ALFA ROMEO / BMW / CHRYSLER EURO TRUCK / FORD / ACURA-HONDA MERCEDES / NISSAN / PSA / PORSCHE ROVER / SUBARU / VOLVO
508985	M8x1 / HP R134a	CHRYSLER / EUROTRUCK / FIAT HYUNDAI / JAGUAR / MAZDA MITSUBISHI / OPEL/VAUXHALL RENAULT / SUZUKI / TOYOTA/LEXUS VOLKSWAGEN-AUDI

Valeo	ⓘ	
508986	M10x1 / HP R134a	ALFA ROMEO / BMW / CHRYSLER EURO TRUCK / FORD / ACURA-HONDA MERCEDES / NISSAN / PSA / PORSCHE ROVER / SUBARU / VOLVO
509315	3/16" / R12	CHRYSLER
509316	M8x1 / BP R134a	EURO TRUCK
509317	M10x1 / HP R134a	EURO TRUCK
509772	BP	VARIOUS
509773	HP	VARIOUS

Scale 1:1, page 372
Echelle 1:1, page 372
Escala 1:1, página 372
Escala 1:1, página 372
Scala 1:1, pagina 372
Schaal 1:1, pagina 372
Ölçek 1:1, sayfa 372
Scară 1:1, pagini 372
Skala 1:1, strona 372

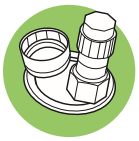

KIT DE VALVES | **VALVE CORE KIT**
VENTILEINSATZ | ***KIT DE VÃLVULAS***
KIT DE VALVULAS | **KIT VALVOLE**
KLEP SET | **KIT DE SUPAPĂ**
ZESTAW ZAWORKÓW

Valeo
509735

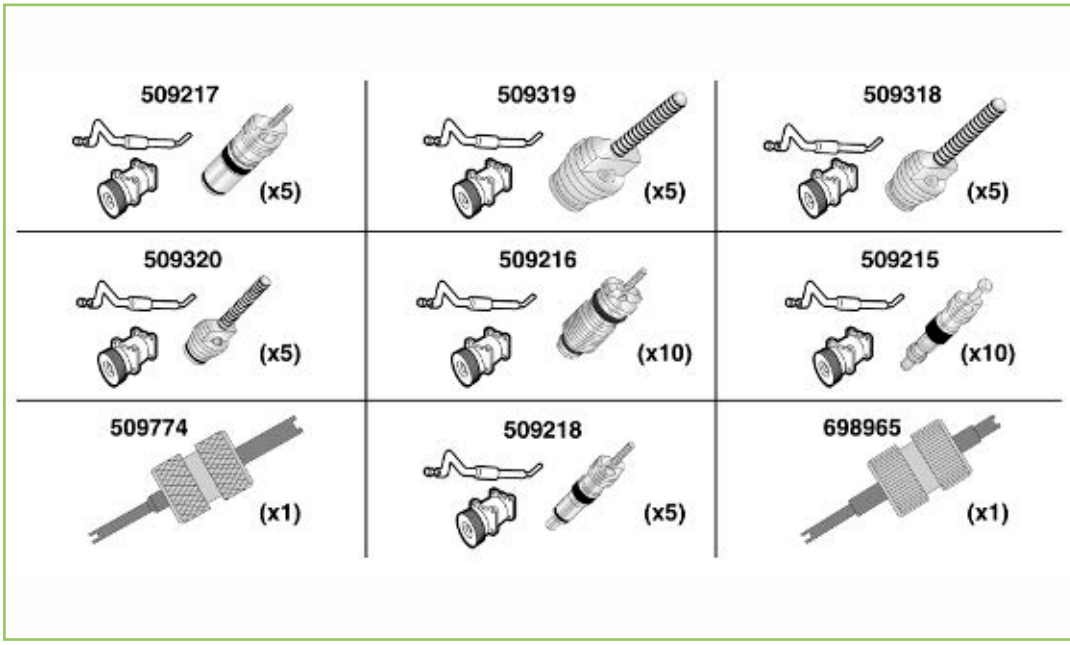

Valeo	ⓘ	
509215	X10	VARIOUS
509216	X10	VARIOUS
509217	X5	PEUGEOT/VOLVO
509218	X5	RENAULT FRANCE
509318	X5	VARIOUS
509319	X5	VARIOUS
509320	X5	GM
509774	X1	VARIOUS
698965	X1	VARIOUS

Valeo	ⓘ	

Scale 1:1, page 372 | Escala 1:1, página 372 | Scala 1:1, pagina 372 | Ölçek 1:1, sayfa 372 | Skala 1:1, strona 372
Echelle 1:1, page 372 | Escala 1:1, página 372 | Schaal 1:1, pagina 372 | Scară 1:1, pagini 372

698929

KIT DE JOINT D'ÉTANCHÉITÉ POUR .....
O'RING AND GASKET SEALS KIT FOR .....
DICHTUNGSSATZ FÜR .....
KIT DE JUNTAS DE ESTANQUEIDAD PARA .....
KIT DE JUNTAS DE ESTANQUECIDADE PER .....
KIT O'RING E GUARNIZIONI DI TENUTA PER
DICHTINGEN SET FOR .....
KIT DE GARNITURE PENTRU .....
ZESTAW ORING W I USZCZELEK DO

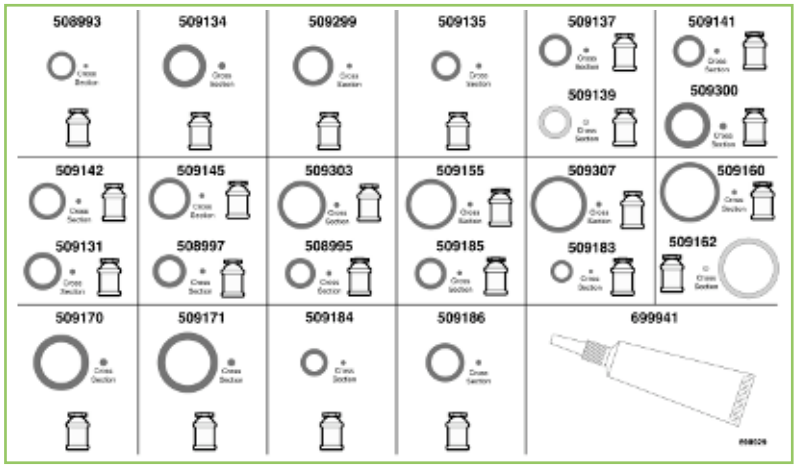

Valeo		Qty	Qty
508993	7mm Hose Vert/Green	10	20
508995		10	20
508997		10	20
509131		10	20
509134		10	20
509135		10	20
509137	N°6 (3/8")	10	20
509139	N°6 Hose Jaune/Yellow	10	20
509141	N°6 (3/8")	10	20
509142		10	20
509145		10	20
509155		10	20
509160		10	20
509162	Jaune/Yellow		
509170		10	20
509171	15mm Int D Comp	10	20
509183		10	20
509184		10	20
509185		10	20
509186		10	20
509299	N°8 (1/2")	10	20
509300		10	20
509303		10	20
509307	N°12 (3/4")	10	20
699941	Polyester oil	2	1

699929

KIT OUTIL RACCORD RAPIDE .....
SPRINGLOCK COUPLING / CLAMP KIT .....
SCHNELLVERSCHLUßSATZ .....
KIT DE HERRAMIENTAS PARA ENCHUFES RAPIDOS .....
KIT PONTEIRAS PARA ENGATE RÁPIDO .....
KIT PRESA DI ATTACCO RAPIDO .....
SNELKOPPELING «SPRINGLOCK» SET .....
SCULA DE RACODARE RAPIDA .....
ZESTAW KLAMER I POŻĄCZEŃ SPRING LOCK

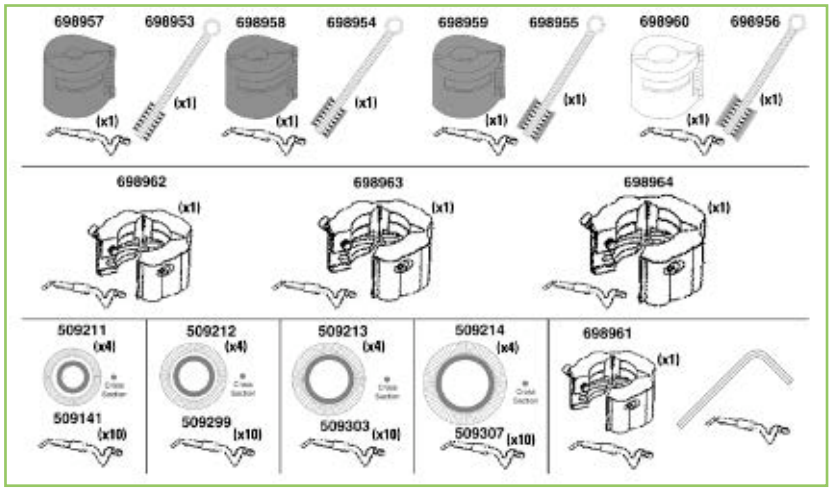

Valeo		Qty	Qty
698957	N°6 (3/8") Rouge/Red	1	1
698958	N°8 (1/2") Bleu/Blue	1	1
698959	N°10 (5/8") Noir/Black	1	1
698960	N°12 (3/4") Blanc/White	1	1
698961	N°6 (3/8")	1	1
698962	N°8 (1/2")	1	1
698963	N°10 (5/8")	1	1
698964	N°12 (3/4")	1	1
698953	N°6 (3/8")	1	1
698954	N°8 (1/2")	1	1
698955	N°10 (5/8")	1	1
698956	N°12 (3/4")	1	1
509211	N°6 (3/8")	10	6
509212	N°8 (1/2")	2	6
509213	N°10 (5/8")	10	6
509214	N°12 (3/4")	2	6
509141	N°6 (3/8")	10	20
509299	N°8 (1/2")	10	20
509303	N°10 (5/8")	10	20
509307	N°12 (3/4")	10	20

Scale 1:1, page 372
Echelle 1:1, page 372
Escala 1:1, página 372
Escala 1:1, página 372
Scala 1:1, pagina 372
Schaal 1:1, pagina 372
Ölçek 1:1, sayfa 372
Scară 1:1, pagini 372
Skala 1:1, strona 372

	Valeo	Valeo		Qty
BAGUE DE GARANTIE	**699938**	**699938**	25HP + 25BP	50
SAFETY GUARD				
SCHRUMPFPLOMBE				
PRECINTO DE SEGURIDAD				
DISPOSITIVO DE SEGURANÇA				
ANELLO DI SICUREZZA				
GARANTIE SPANRING				
INEL DE GARANŢIE				
PLOMBY ZABEZPIECZAJĄCE NAKRĘTKI				

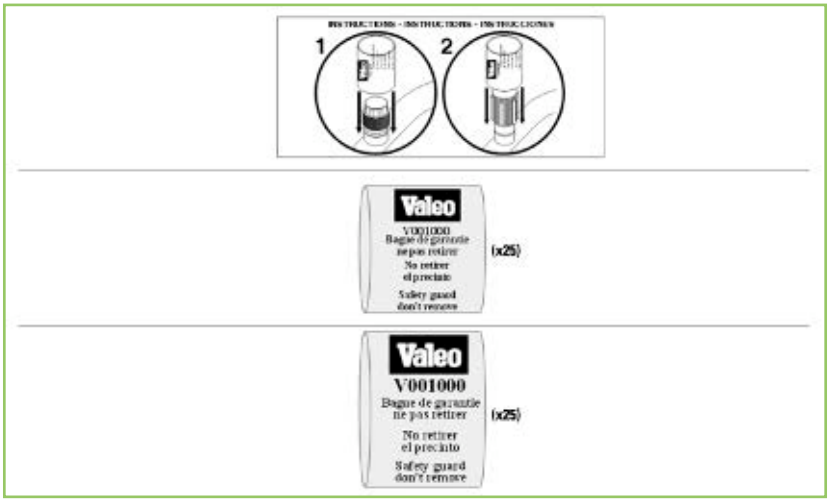

KIT HUILE DE LUBRIFICATION POUR JOINTS	**699940**	**698965**	Outil pour valve/valve tool	1
O'RING LUBRIFICATION KIT		**699941**	Huile polyester/Polyester oil	1
ÖL FÜR DICHTUNGENSATZ				
ACEITE DE LUBRIFICACION DE LAS JUNTAS				
OLEO DE LUBRIFICAÇÃO DAS JUNTAS				
KIT LUBRIFICANTE PER O'RING E GUARNIZIONI				
SMEEROLIE VOOR O'RING				
KIT DE ULEI DE LUBRIFICARE PENTRU GARNITURĂ				
ZESTAW DO SMAROWANIA ORING W				

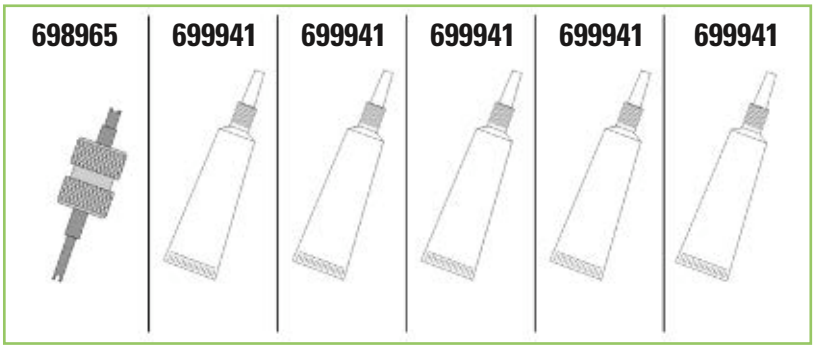

Scale 1:1, page 372
Echelle 1:1, page 372
Escala 1:1, página 372
Escala 1:1, página 372
Scala 1:1, pagina 372
Schaal 1:1, pagina 372
Ölçek 1:1, sayfa 372
Scară 1:1, pagini 372
Skala 1:1, strona 372

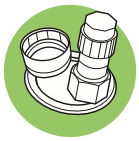

			Qty	Qty
ADAPTATEUR POUR «RETROFIT R12/R134A» ***PORTS FOR RETROFIT*** **ADAPTER FÜR RETROFIT** ***ADAPTADORES*** **ADAPTADORES** ***ADDATTATORI PER RETROFIT*** **ADAPTERS VOOR RETROFIT** **ADAPTOR PENTRU RETROFIT** **KOŃC WKI WĘŁA R12 / R134A** **509387** 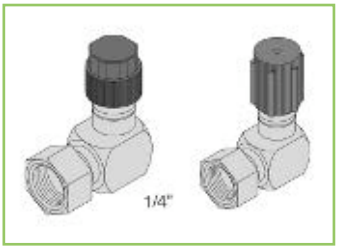	**509387**	BP&HP		1
509388 	**509388**	HP		1
509389 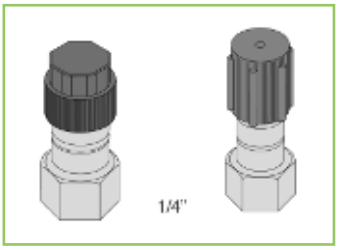	**509389**	BP&HP		1
509390 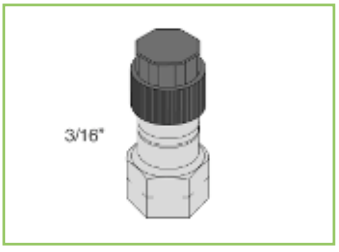	**509390**	HP		1

Scale 1:1, page 372
Echelle 1:1, page 372
Escala 1:1, página 372
Escala 1:1, página 372
Scala 1:1, pagina 372
Schaal 1:1, pagina 372
Ölçek 1:1, sayfa 372
Scară 1:1, pagini 372
Skala 1:1, strona 372

Valeo		Valeo		Qty	Qty
509550		**509550**	*11 mm Marron/Brown - N°8* *RENAULT*		20
509551		**509551**	*8 mm Rouge/Red - N°6* *ALFA ROMEO* *FIAT* *IVECO* *LANCIA* *RENAULT*		20
509552		**509552**	*11 mm Rouge/Red - N°8* *ALFA ROMEO* *FIAT* *IVECO* *LANCIA*		20
509553		**509553**	*14 mm Rouge/Red - N°10* *ALFA ROMEO* *FIAT* *IVECO* *LANCIA* *IVECO* *LANCIA*		20

Scale 1:1, page 294
Echelle 1:1, page 294
Escala 1:1, página 294
Escala 1:1, página 294

Scala 1:1, pagina 2944
Schaal 1:1, pagina 294
Ölçek 1:1, sayfa 294
Scară 1:1, pagini 294

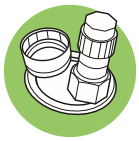

	Valeo	Valeo		Qty
	509554	**509554**	*17 mm Rouge/Red - N°12* *ALFA ROMEO* *FIAT* *IVECO* *LANCIA*	20
	509555	**509555**	*13 mm Marron/Brown - N°10* *RENAULT*	20
	509556	**509556**	*16 mm Marron/Brown - N°12* *RENAULT*	20

509554

509555

509556

Scale 1:1, page 372
Echelle 1:1, page 372
Escala 1:1, página 372
Escala 1:1, página 372
Scala 1:1, pagina 372
Schaal 1:1, pagina 372
Ölçek 1:1, sayfa 372
Scară 1:1, pagini 372
Skala 1:1, strona 372

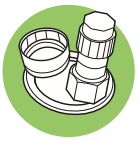

	Valeo	Valeo	Qty
KIT DE JOINTS D'ÉTANCHÉITÉ ***DICHTUNGSSATZ*** **KIT DE JUNTAS DE ESTANQUECIDADE** **DICHTINGEN SET**	**O'RING AND GASKET SEALS KITS** ***KIT DE JUNTAS DE ESTANQUEIDAD*** **KIT ORING E GUARNIZIONI DI TENUTA** **KIT DE GARNITURE PENTRU**		

ALFA ROMEO

Valeo **509210**

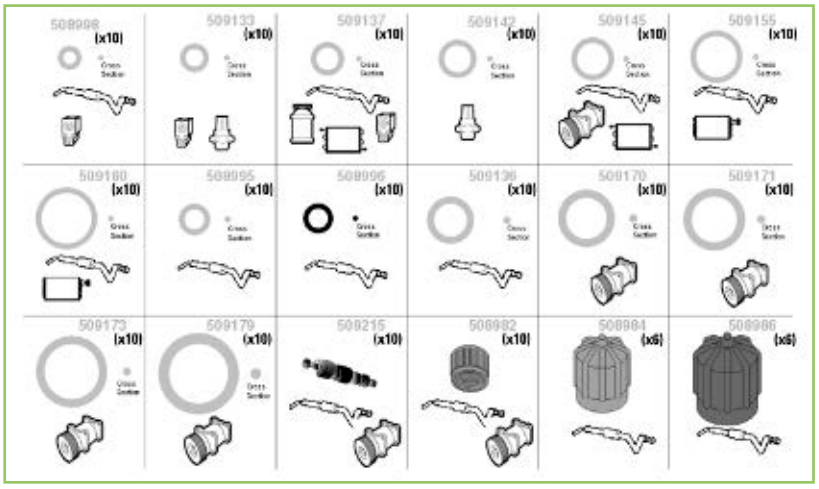

508982	1/4"	R12	10	6
508984	M8x1	BP R134a	6	6
508986	M10x1	HP R134a	6	6
508995			10	20
508996		Noir/black	10	20
508998			10	20
509133			10	20
509136			10	20
509137	N°6 (3/8")		10	20
509142			10	20
509145			10	20
509155			10	20
509160			10	20
509170			10	20
509171	15mm Int D Comp		10	20
509173	18mm Int D Comp		10	20
509179			10	20
509215	Valve R12/R134a		10	6

AUDI > VOLKSWAGEN (Valeo 509189)

Scale 1:1, page 372
Echelle 1:1, page 372
Escala 1:1, página 372
Escala 1:1, página 372
Scala 1:1, pagina 372
Schaal 1:1, pagina 372
Ölçek 1:1, sayfa 372
Scară 1:1, pagini 372
Skala 1:1, strona 372

BMW

Valeo 509294

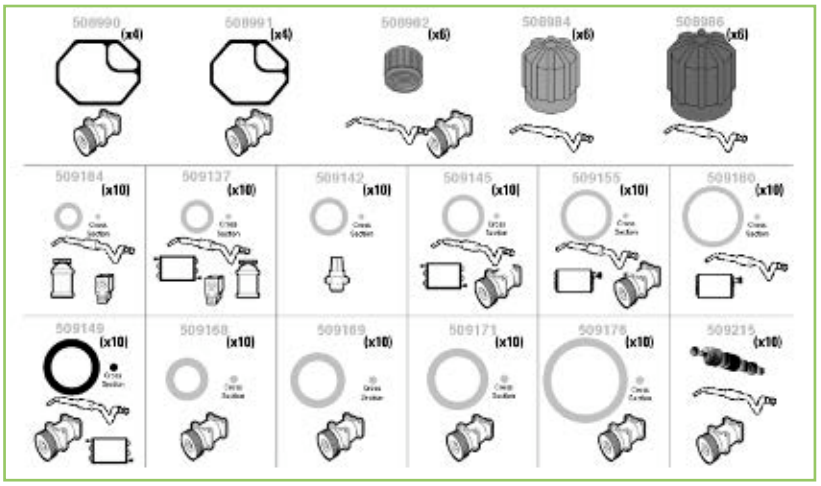

			Qty	Qty
508982	1/4"	R12	6	6
508984	M8x1	BP R134a	6	6
508986	M10x1	HP R134a	6	6
508990			4	6
508991			4	6
509137	N°6 (3/8")		10	20
509142			10	20
509145			10	20
509149		Noir/Black	10	20
509155			10	20
509160			10	20
509168			10	20
509169			10	20
509171	15mm Int D Comp		10	20
509176	24mm Int D Comp		10	20
509184			10	20
509215	Valve R12/R134a		10	6

CHRYSLER (1)

Valeo 509337

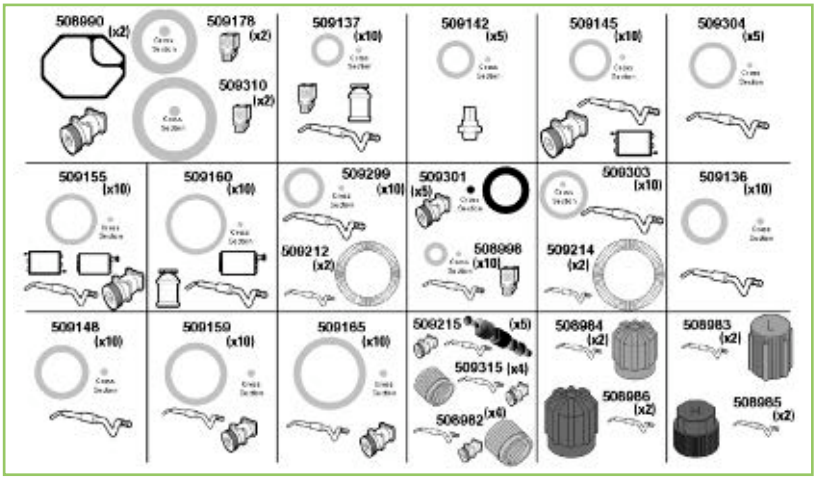

			Qty	Qty
508982	1/4"	R12	4	6
508983	M8x1	BP R134a	2	6
508984	M8x1	BP R134a	2	6
508985	M8x1	HP R134a	2	6
508986	M10x1	HP R134a	2	6
508988			2	20
508990			2	6
508998			10	20
509136			10	20
509137	N°6 (3/8")		10	20
509142			5	20
509145			10	20
509148			10	20
509155			10	20
509159			10	20
509160			10	20
509165			10	20
509178			2	20
509212	N°8 (1/2")		2	6
509214	N°12 (3/4")		2	6
509215	Valve R12/R134a		5	6
509299	N°8 (1/2")		10	20
509301		Noir/black	5	20
509303			10	20
509304			5	20
509315	3/16"	R12	4	6

Scale 1:1, page 372
Echelle 1:1, page 372
Escala 1:1, página 372
Escala 1:1, página 372
Scala 1:1, pagina 372
Schaal 1:1, pagina 372
Ölçek 1:1, sayfa 372
Scară 1:1, pagini 372
Skala 1:1, strona 372

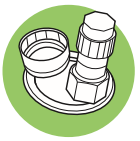

CHRYSLER (2)

Valeo 509338

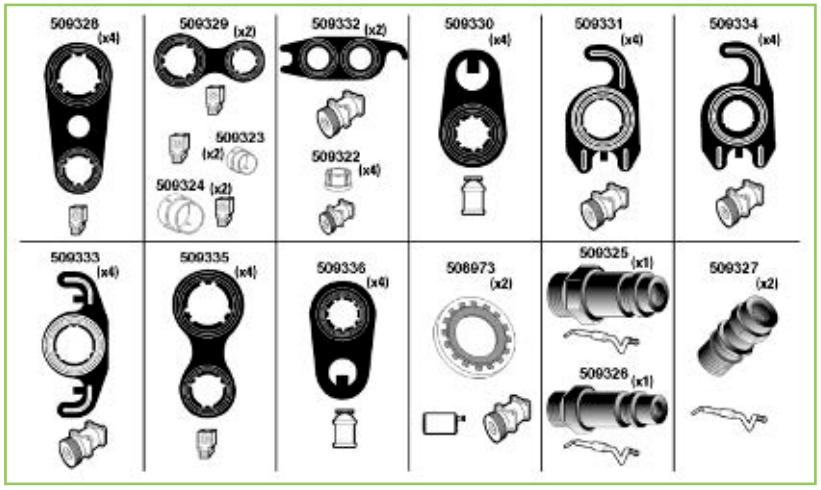

Valeo			Qty	Qty
508973			2	10
509322			4	10
509323			2	10
509324			2	10
509325		R134a	1	1
509326		R134a	1	1
509327		R134a	2	10
509328			4	10
509329			2	10
509330			4	10
509331			4	10
509332			2	10
509333			4	10
509334			4	10
509335			4	10
509336			4	10

CITROËN > PEUGEOT (Valeo 509203)

EUROTRUCK

Valeo 509339

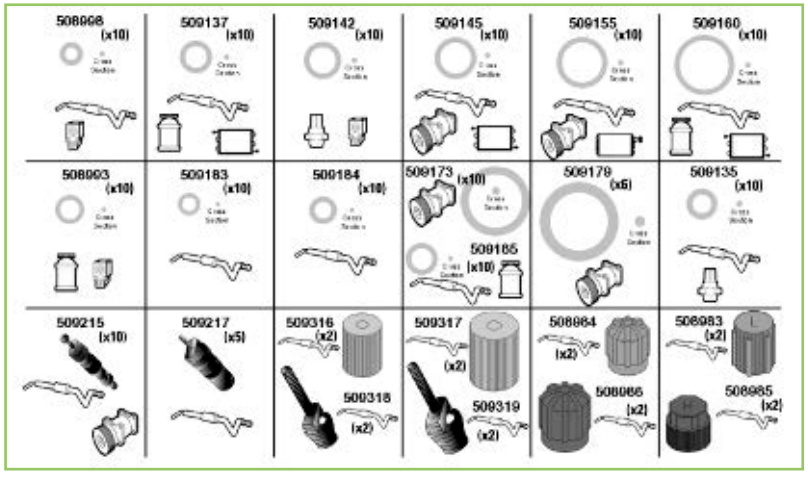

Valeo			Qty	Qty
508983	M8x1	BP R134a	2	6
508984	M8x1	BP R134a	2	6
508985	M8x1	HP R134a	2	6
508986	M10x1	HP R134a	2	6
508993		Vert/green	10	20
508998			10	20
509135			10	20
509137	N°6 (3/8")		10	20
509142			10	20
509145	N° 8 Hose (1/2")		10	20
509155	N°10 Hose (5/8")		10	20
509160	N°12 Hose (3/4")		10	20
509173	18mm Int D Comp		10	20
509179			6	20
509183			10	20
509184			10	20
509185			10	20
509316			2	6
509317			2	6
509318	Valve R134a		2	10
509319	Valve R134a		2	10

Scale 1:1, page 372
Echelle 1:1, page 372
Escala 1:1, página 372
Escala 1:1, página 372
Scala 1:1, pagina 372
Schaal 1:1, pagina 372
Ölçek 1:1, sayfa 372
Scară 1:1, pagini 372
Skala 1:1, strona 372

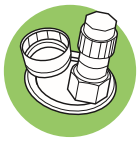

Valeo

Valeo

Valeo

FIAT

Valeo **509190**

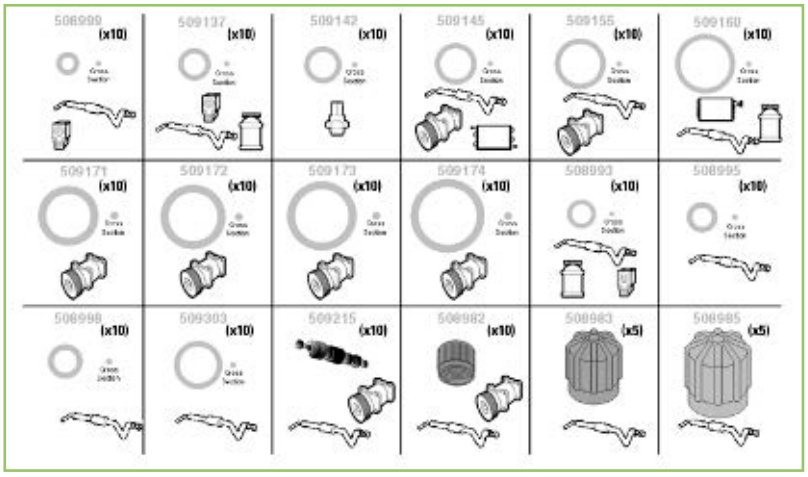

Valeo			Qty	Qty
508982	1/4"	R12	10	6
508983	M8x1	BP R134a	5	6
508985	M8x1	HP R134a	5	6
508993	7 mm Hose	Vert/green	10	20
508995			10	20
508998	8 mm Hose		10	20
508999			10	20
509137	N°6 (3/8")		10	20
509142			10	20
509145	N° 8 Hose (1/2")		10	20
509155	N°10 Hose (5/8")		10	20
509160	N°12 Hose (3/4")		10	20
509171	15mm Int D Comp		10	20
509172	17mm Int D comp		10	20
509173	18mm Int D Comp		10	20
509174	20mm Int D Comp		10	20
509215	Valve R12/R134a		10	6
509303	13 mm Hose		10	20

FORD (1)

Valeo **509191**

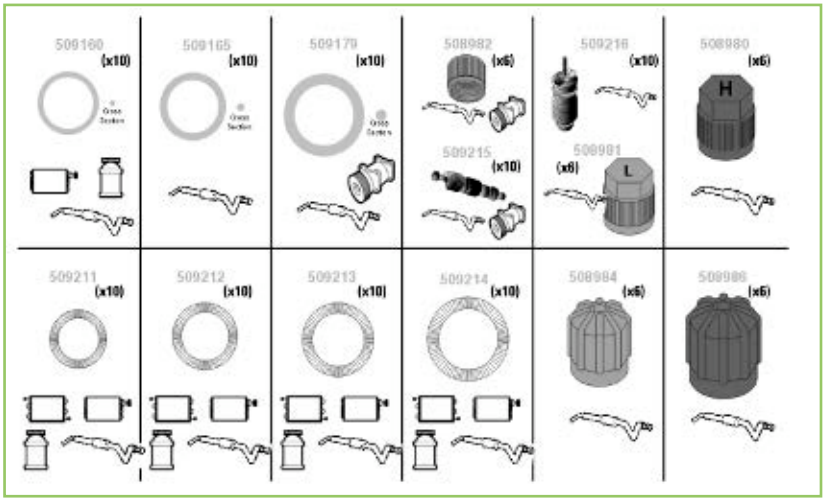

Valeo			Qty	Qty
508980	M10x1.25	HP R134a	6	6
508981	M9x1	BP R134a	6	6
508982	1/4"	R12	6	6
508984	M8x1	BP R134a	6	6
508986	M10x1	HP R134a	6	6
509160	N°12 Hose (3/4")		10	20
509165	20 mm Hose		10	20
509179			10	20
509211	N°6 (3/8")		10	6
509212	N°8 (1/2")		10	6
509213	N°10 (5/8")		10	6
509214	N°12 (3/4")		10	6
509215	Valve R12/R134a		10	6
509216	Valve JRA R134a		10	6

Scale 1:1, page 372
Echelle 1:1, page 372
Escala 1:1, página 372
Escala 1:1, página 372
Scala 1:1, pagina 372
Schaal 1:1, pagina 372
Ölçek 1:1, sayfa 372
Scară 1:1, pagini 372
Skala 1:1, strona 372

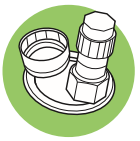

Valeo		Valeo		Qty	Qty

FORD (2)

Valeo **509192**

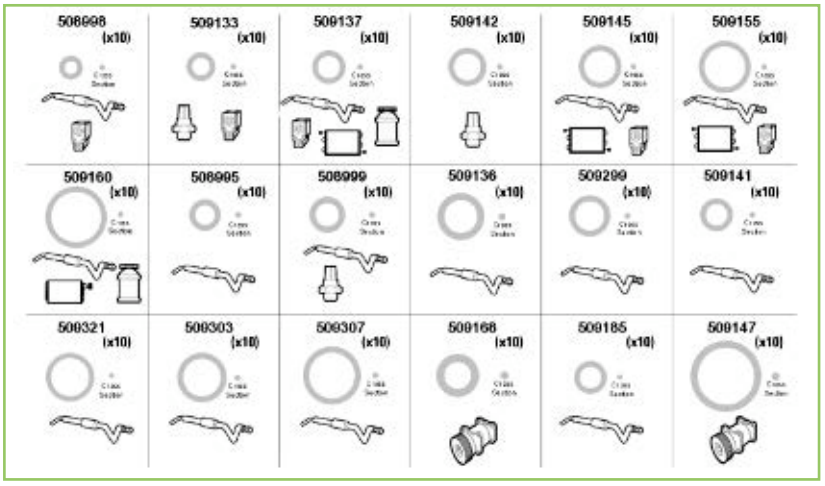

508995		10	20
508998		10	20
508999	8 mm Hose	10	20
509133	1/4" (7/16-20)	10	20
509136	10 mm Hose	10	20
509137	N°6 (3/8")	10	20
509141	N°6 (3/8")	10	20
509142		10	20
509145	N° 8 Hose (1/2")	10	20
509155	N°10 Hose (5/8")	10	20
509160	N°12 Hose (3/4")	10	20
509168		10	20
509185		10	20
509299	N°8 (1/2")	10	20
509303	13 mm Hose	10	20
509307	N°12 (3/4")	10	20
509321		10	20

HONDA

Valeo **509193**

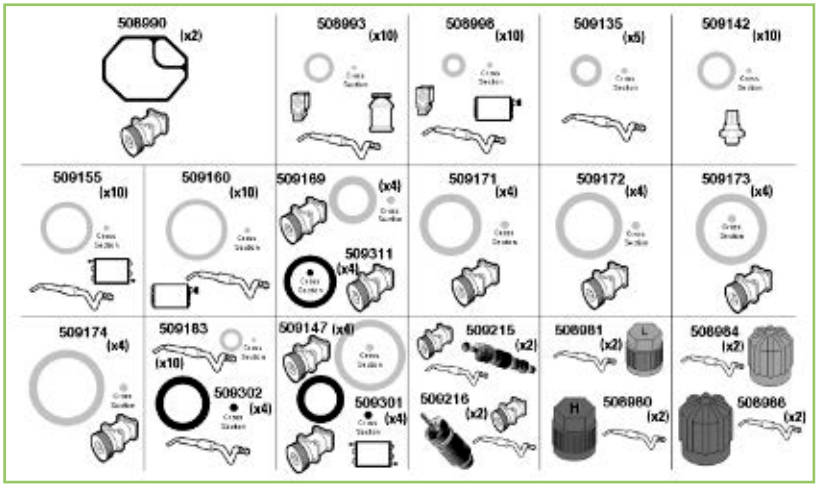

508980	M10x1.25	HP R134a	2	6
508981	M9x1	BP R134a	2	6
508984	M8x1	BP R134a	2	6
508986	M10x1	HP R134a	2	6
508990			2	6
508993	7 mm Hose	Vert/green	10	20
508998			10	20
509135	6 mm Hose		5	20
509142			10	20
509147	19mm Int D comp	Noir/black	4	20
509155	N°10 Hose (5/8")		10	20
509160	N°12 Hose (3/4")		10	20
509169	10 mm Intern D	Noir/black	4	20
509171	15mm Int D Comp		4	20
509172	17mm Int D comp		4	20
509173	18mm Int D Comp		4	20
509174	20mm Int D Comp		4	20
509183		Noir/black	10	20
509215	Valve R12/R134a		2	6
509216	Valve JRA R134a		2	6
509301	12,7 Metric	Noir/black	4	20
509302	5/8" Metric (16mm)	Noir/black	4	20
509311		Noir/black	4	20

Scale 1:1, page 372
Echelle 1:1, page 372
Escala 1:1, página 372
Escala 1:1, página 372
Scala 1:1, pagina 372
Schaal 1:1, pagina 372
Ölçek 1:1, sayfa 372
Scară 1:1, pagini 372
Skala 1:1, strona 372

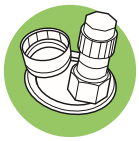

Valeo

HYUNDAI

Valeo **509194**

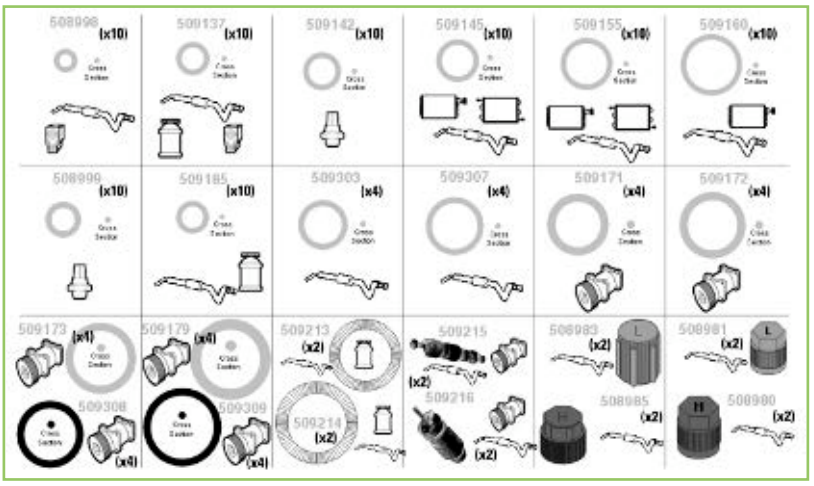

Valeo			Qty	Qty
508980	M10x1.25	HP R134a	2	6
508981	M9x1	BP R134a	2	6
508983	M8x1	BP R134a	2	6
508985	M8x1	HP R134a	2	6
508998			10	20
508999	8 mm Hose		10	20
509137	N°6 (3/8")		10	20
509142			10	20
509145			10	20
509155			10	20
509160			10	20
509171	15mm Int D Comp		4	20
509172	17mm Int D comp		4	20
509173	18mm Int D Comp		4	20
509179			4	20
509185			10	20
509213	N°10 (5/8")		2	6
509214	N°12 (3/4")		2	6
509215	Valve R12/R134a		2	6
509216	Valve JRA R134a		2	6
509303			4	20
509307	N°12 (3/4")		4	20
509308		Noir/black	4	20
509309		Noir/black	4	20

JAGUAR

Valeo **509195**

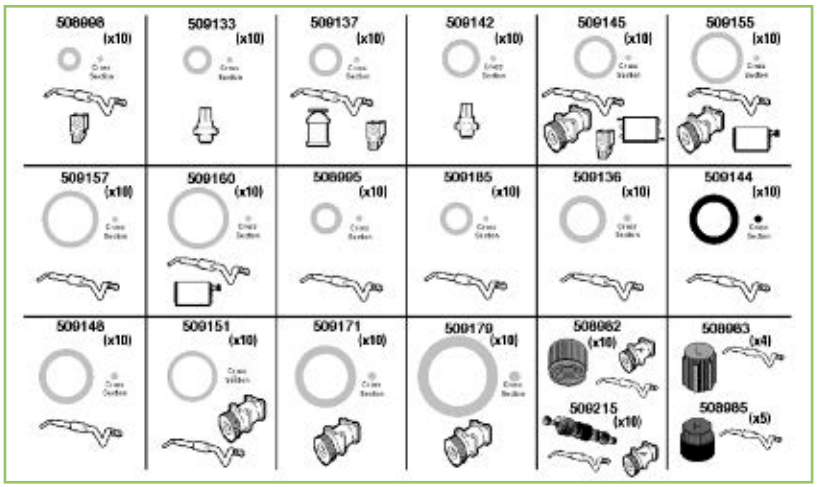

Valeo			Qty	Qty
508982	1/4"	R12	10	6
508983	M8x1	BP R134a	4	6
508985	M8x1	HP R134a	5	6
508998			10	20
509133			10	20
509136			10	20
509137	N°6 (3/8")		10	20
509142			10	20
509144		Noir/Black	10	20
509145			10	20
509148			10	20
509151			10	20
509155			10	20
509160			10	20
509171	15mm Int D Comp		10	20
509179			10	20
509185			10	20
509215	Valve R12/R134a		10	6

Scale 1:1, page 372
Echelle 1:1, page 372
Escala 1:1, página 372
Escala 1:1, página 372
Scala 1:1, pagina 372
Schaal 1:1, pagina 372
Ölçek 1:1, sayfa 372
Scară 1:1, pagini 372
Skala 1:1, strona 372

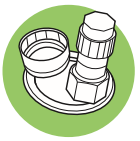

Valeo		Qty	Qty

LANCIA > FIAT (Valeo 509190)

LEXUS > TOYOTA (Valeo 509208)

MAZDA

Valeo **509295**

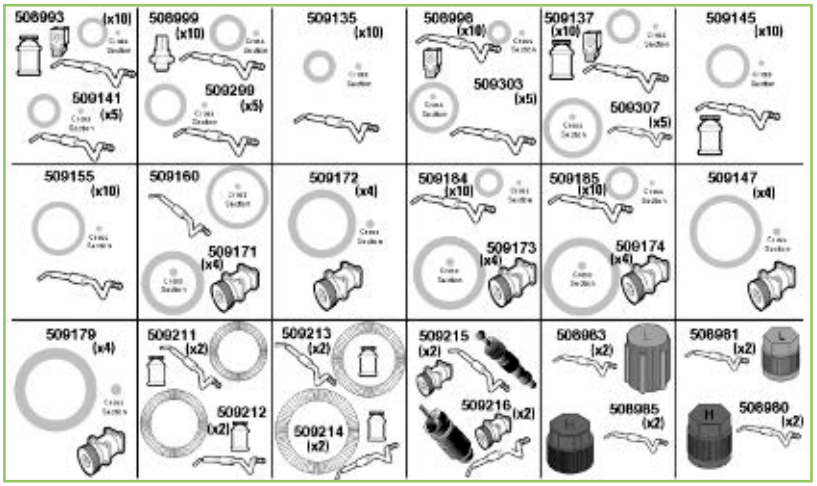

508980	M10x1.25	HP R134a	2	6
508981	M9x1	BP R134a	2	6
508983	M8x1	BP R134a	2	6
508985	M8x1	HP R134a	2	6
508993		Vert/Green	10	20
508998			10	20
508999			10	20
509135			10	20
509137	N°6 (3/8")		10	20
509141	N°6 (3/8")		5	20
509145			10	20
509147	19mm Int D comp		4	20
509155			10	20
509160			10	20
509171	15mm Int D Comp		4	20
509172	17mm Int D comp		4	20
509173	18mm Int D Comp		4	20
509174	20mm Int D Comp		4	20
509179			4	20
509184			10	20
509185			10	20
509211	N°6 (3/8")		2	6
509212	N°8 (1/2")		2	6
509213	N°10 (5/8")		2	6
509214	N°12 (3/4")		2	6
509215	Valve R12/R134a		2	6
509216	Valve JRA R134a		2	6
509299	N°8 (1/2")		5	20
509303			5	20
509307	N°12 (3/4")		5	20

Scale 1:1, page 372
Echelle 1:1, page 372
Escala 1:1, página 372
Escala 1:1, página 372
Scala 1:1, pagina 372
Schaal 1:1, pagina 372
Ölçek 1:1, sayfa 372
Scară 1:1, pagini 372
Skala 1:1, strona 372

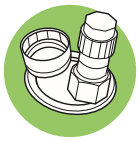

Valeo

MERCEDES (>1988)

Valeo **509197**

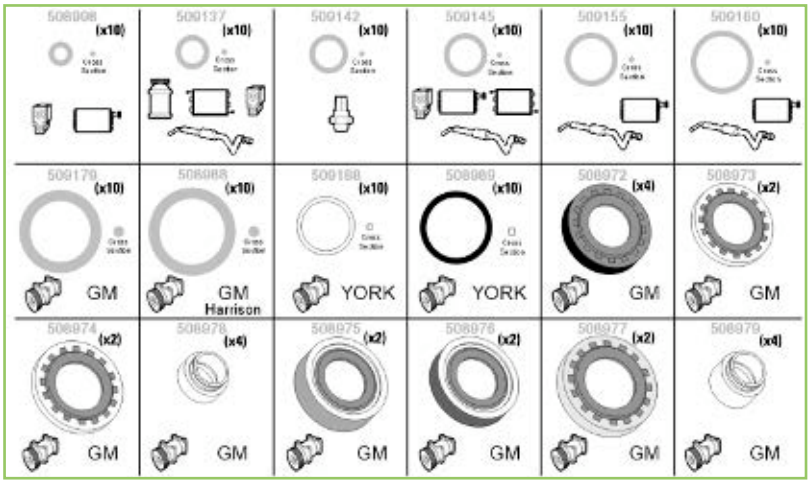

Valeo			Qty	Qty
508972			4	10
508973			2	10
508974			2	10
508975		Vert/Green	2	10
508976		Rouge/Red	2	10
508977		Jaune/Yellow	2	10
508978			4	6
508979			4	10
508988			10	20
508989		Noir/Black	10	20
508998			10	20
509137	N°6 (3/8")		10	20
509142			10	20
509145			10	20
509155			10	20
509160			10	20
509179			10	20
509188		Teflon	10	20

MERCEDES (1988>)

Valeo **509196**

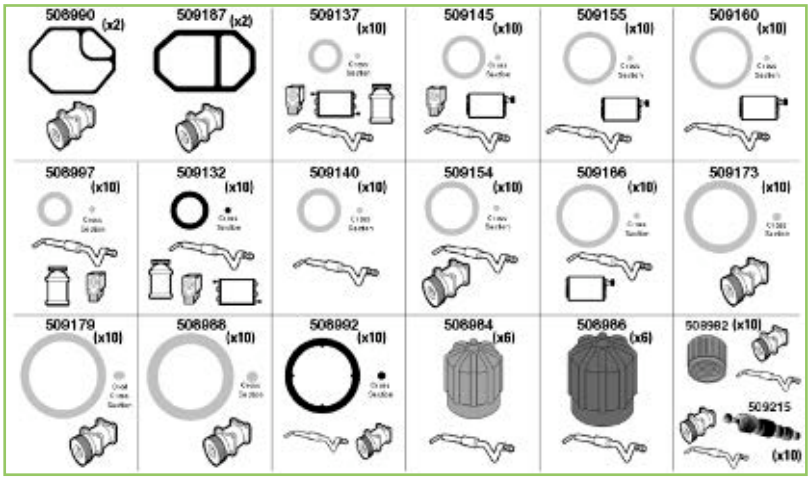

Valeo			Qty	Qty
508982	1/4"	R12	10	6
508984	M8x1	BP R134a	6	6
508986	M10x1	HP R134a	6	6
508988			10	20
508990			2	6
508992		Noir/Black	10	6
508997			10	20
509132		Noir/black	10	20
509137	N°6 (3/8")		10	20
509140			10	20
509145			10	20
509154			10	20
509155			10	20
509160			10	20
509166	17mm Hose		10	20
509173	18mm Int D Comp		10	20
509180			10	20
509187			2	6
509215	Valve R12/R134a		10	6

Scale 1:1, page 372
Echelle 1:1, page 372
Escala 1:1, página 372
Escala 1:1, página 372
Scala 1:1, pagina 372
Schaal 1:1, pagina 372
Ölçek 1:1, sayfa 372
Scară 1:1, pagini 372
Skala 1:1, strona 372

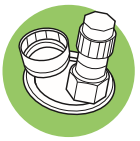

MITSUBISHI

Valeo **509198**

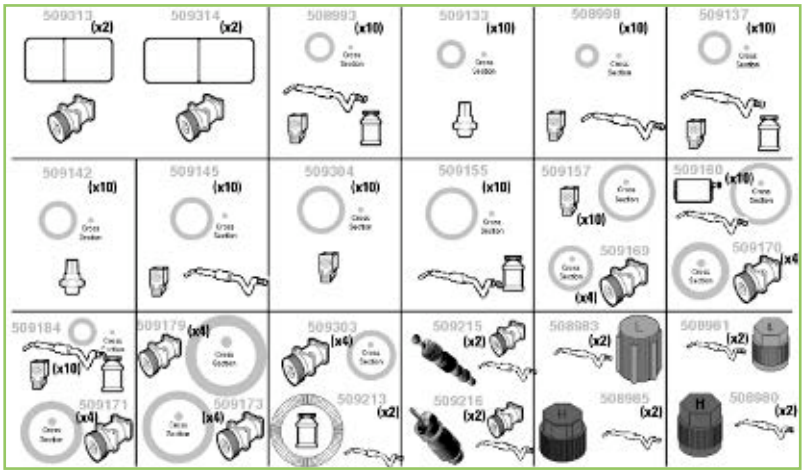

Valeo			Qty	Qty
508980	M10x1.25	HP R134a	2	6
508981	M9x1	BP R134a	2	6
508983	M8x1	BP R134a	2	6
508985	M8x1	HP R134a	2	6
508993		Vert/green	10	20
508998			10	20
509133			10	20
509137	N°6 (3/8")		10	20
509142			10	20
509145			10	20
509155			10	20
509157			10	20
509160			10	20
509169			4	20
509170			4	20
509171	15mm Int D Comp		4	20
509173	18mm Int D Comp		4	20
509179			4	20
509184			10	20
509213	N°10 (5/8")		2	6
509215	Valve R12/R134a		2	6
509216	Valve JRA R134a		2	6
509303			4	20
509304			10	20
509313			2	6
509314			2	6

NISSAN

Valeo **509200**

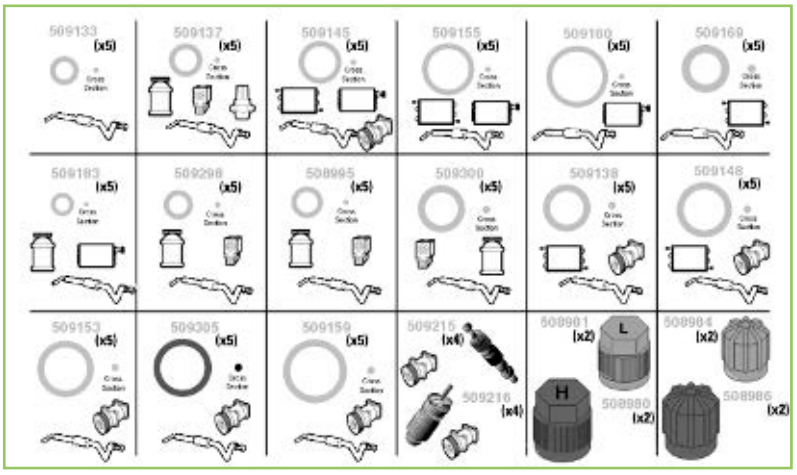

Valeo			Qty	Qty
508980	M10x1.25	HP R134a	2	6
508981	M9x1	BP R134a	2	6
508984	M8x1	BP R134a	2	6
508986	M10x1	HP R134a	2	6
508995			5	20
509133			5	20
509137	N°6 (3/8")		5	20
509138			5	20
509145			5	20
509148			5	20
509153			5	20
509155			5	20
509159			5	20
509160			5	20
509169			5	20
509183			5	20
509215	Valve R12/R134a		4	6
509216	Valve JRA R134a		4	6
509298			5	20
509300			5	20
509305		Noir/Black	5	20

Scale 1:1, page 372
Echelle 1:1, page 372
Escala 1:1, página 372
Escala 1:1, página 372
Scala 1:1, pagina 372
Schaal 1:1, pagina 372
Ölçek 1:1, sayfa 372
Scară 1:1, pagini 372
Skala 1:1, strona 372

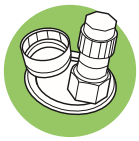

Valeo

Valeo

OPEL/VAUXHALL (1)

Valeo **509201**

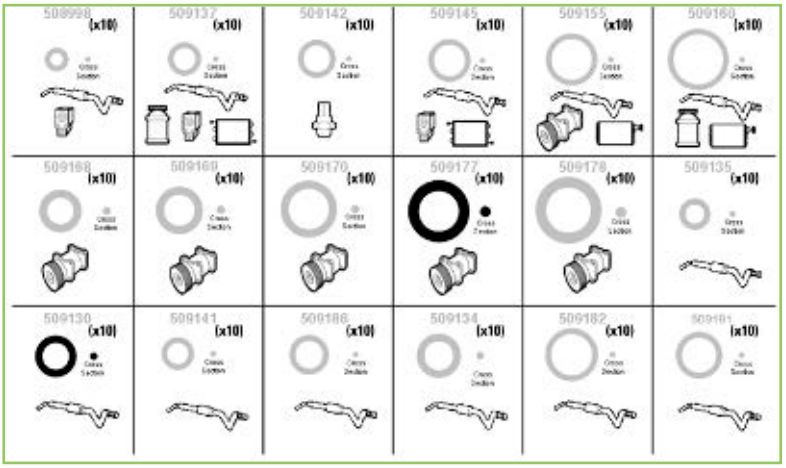

Valeo			Qty	Qty
508998			10	20
509130		Noir/Black	10	20
509134			10	20
509135			10	20
509137	N°6 (3/8")		10	20
509141	N°6 (3/8")		10	20
509142			10	20
509145			10	20
509155			10	20
509160			10	20
509168			10	20
509169			10	20
509170			10	20
509177		Noir/Black	10	20
509178			10	20
509181			10	20
509182			10	20
509186			10	20

OPEL/VAUXHALL (2)

Valeo **509296**

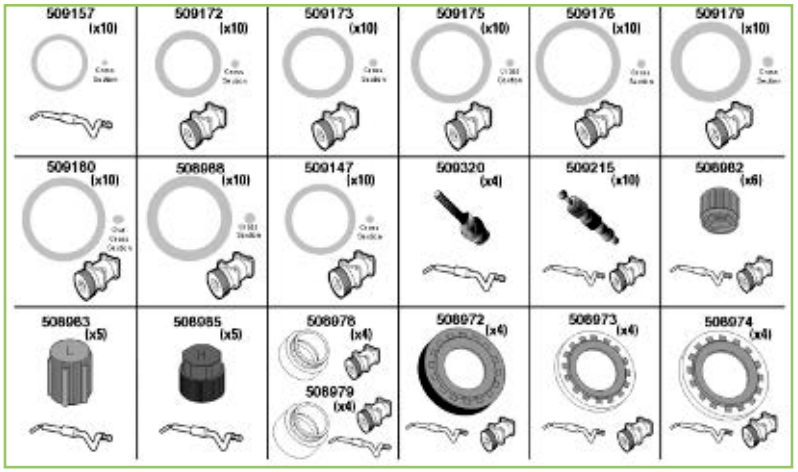

Valeo			Qty	Qty
508972			4	10
508973			4	10
508974			4	10
508978			4	6
508979			4	10
508982	1/4"	R12	6	6
508983	M8x1	BP R134a	5	6
508985	M8x1	HP R134a	5	6
508988			10	20
509147	19mm Int D comp		10	20
509157			10	20
509172	17mm Int D comp		10	20
509173	18mm Int D Comp		10	20
509175			10	20
509176	24mm Int D Comp		10	20
509179			10	20
509180			10	20
509215	Valve R12/R134a		10	6
509320	Valve R12 & R134a		4	6

Scale 1:1, page 372
Echelle 1:1, page 372
Escala 1:1, página 372
Escala 1:1, página 372
Scala 1:1, pagina 372
Schaal 1:1, pagina 372
Ölçek 1:1, sayfa 372
Scară 1:1, pagini 372
Skala 1:1, strona 372

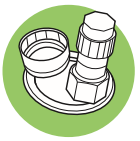

Valeo		Valeo		Qty	Qty

PEUGEOT

Valeo **509203**

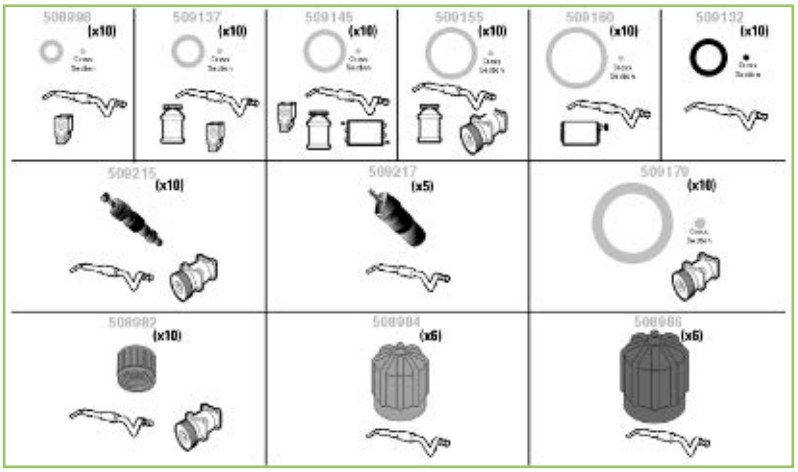

508982	1/4"	R12	10	6
508984	M8x1	BP R134a	6	6
508986	M10x1	HP R134a	6	6
508998			10	20
509132		Noir/black	10	20
509137	N°6 (3/8")		10	20
509145			10	20
509155			10	20
509160			10	20
509179			10	20
509215	Valve R12/R134a		10	6
509217	Valve M8 R134a		5	6

PORSCHE

Valeo **509202**

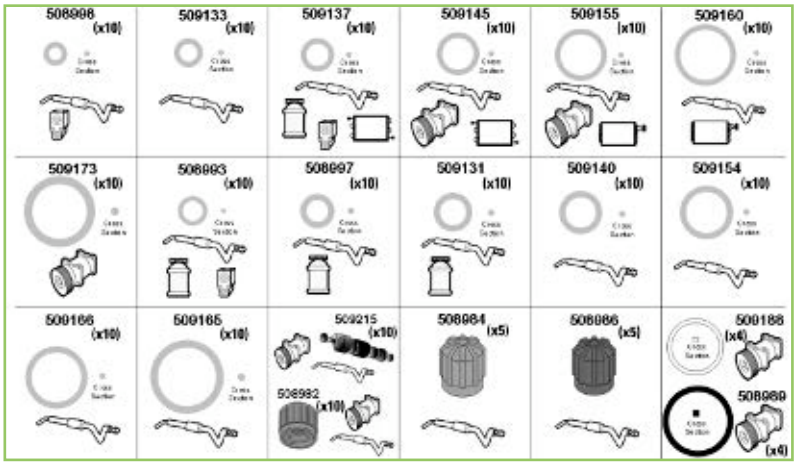

508982	1/4"	R12	10	6
508984	M8x1	BP R134a	5	6
508986	M10x1	HP R134a	5	6
508989		York comp	4	20
508993		Vert/green	10	20
508997			10	20
508998			10	20
509131			10	20
509133			10	20
509137	N°6 (3/8")		10	20
509140			10	20
509145			10	20
509154			10	20
509155			10	20
509160			10	20
509165			10	20
509166	17mm Hose		10	20
509173	18mm Int D Comp		10	20
509188		Teflon	4	20
509215	Valve R12/R134a		10	6

Scale 1:1, page 372
Echelle 1:1, page 372
Escala 1:1, página 372
Escala 1:1, página 372
Scala 1:1, pagina 372
Schaal 1:1, pagina 372
Ölçek 1:1, sayfa 372
Scară 1:1, pagini 372
Skala 1:1, strona 372

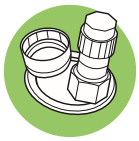

Valeo

RENAULT

Valeo 509204

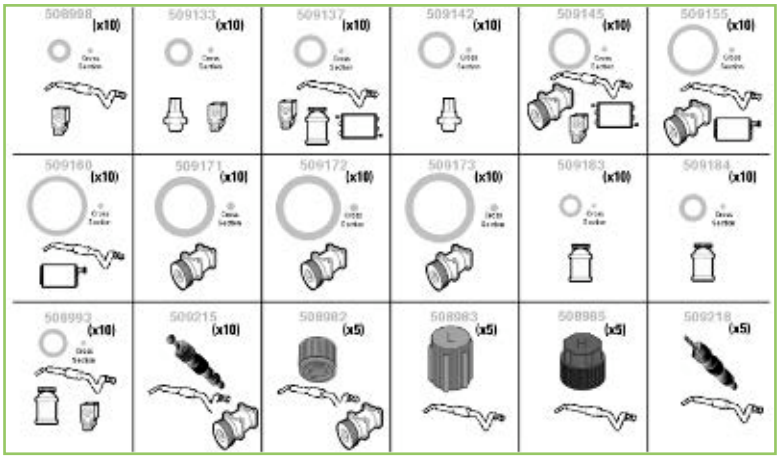

			Qty	Qty
508982	1/4"	R12	5	6
508983	M8x1	BP R134a	5	6
508985	M8x1	HP R134a	5	6
508993		Vert/green	10	20
508998			10	20
509133			10	20
509137	N°6 (3/8")		10	20
509142			10	20
509145			10	20
509155			10	20
509160			10	20
509171	15mm Int D Comp		10	20
509172	17mm Int D comp		10	20
509173	18mm Int D Comp		10	20
509183			10	20
509184			10	20
509215	Valve R12/R134a		10	6
509218	Valve M5 R134a		5	6

ROVER

Valeo 509205

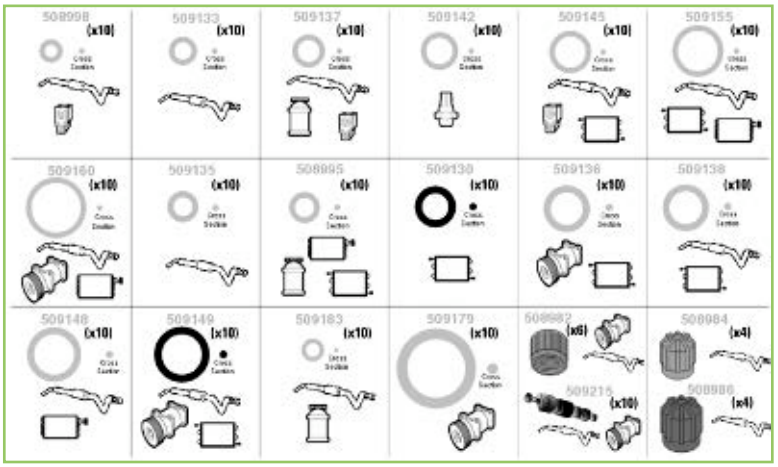

			Qty	Qty
508982	1/4"	R12	6	6
508984	M8x1	BP R134a	4	6
508986	M10x1	HP R134a	4	6
508995			10	20
508998			10	20
509130		Noir/Black	10	20
509133			10	20
509135			10	20
509136			10	20
509137	N°6 (3/8")		10	20
509138			10	20
509142			10	20
509145			10	20
509148			10	20
509149		Noir/Black	10	20
509155			10	20
509160			10	20
509179			10	20
509183			10	20
509215	Valve R12/R134a		10	6

Scale 1:1, page 372
Echelle 1:1, page 372
Escala 1:1, página 372
Escala 1:1, página 372
Scala 1:1, pagina 372
Schaal 1:1, pagina 372
Ölçek 1:1, sayfa 372
Scară 1:1, pagini 372
Skala 1:1, strona 372

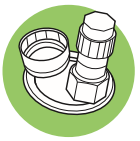

Valeo		Qty	Qty

SAAB > VOLVO (Valeo 509209)

SEAT > VOLKSWAGEN (Valeo 509189)

SKODA > VOLKSWAGEN (Valeo 509189)

SUBARU

Valeo **509206**

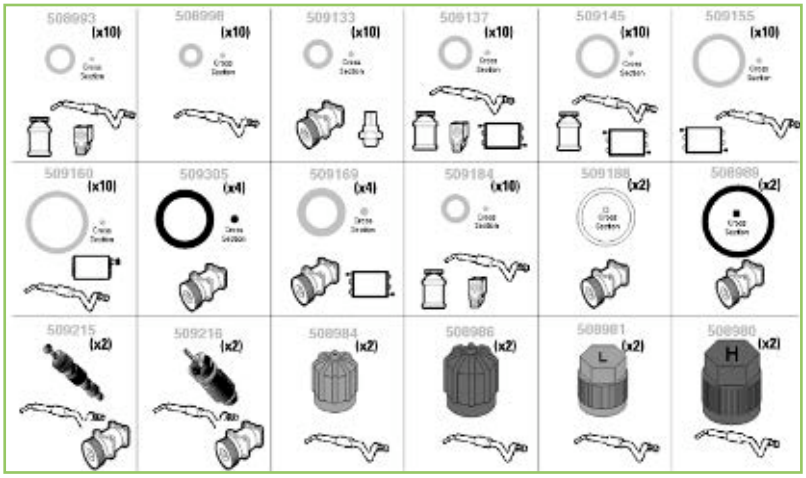

508980	M10x1.25	HP R134a	4	6
508981	M9x1	BP R134a	4	6
508984	M8x1	BP R134a	4	6
508986	M10x1	HP R134a	4	6
508989		Noir/Black	4	20
508993		Vert/green	10	20
508998			10	20
509133			10	20
509137	N°6 (3/8")		10	20
509145			10	20
509155			10	20
509160			10	20
509169			4	20
509184			10	20
509188		Teflon	2	20
509215	Valve R12/R134a		2	6
509216	Valve JRA R134a		2	6
509305		Noir/Black	4	20

SUZUKI

Valeo **509207**

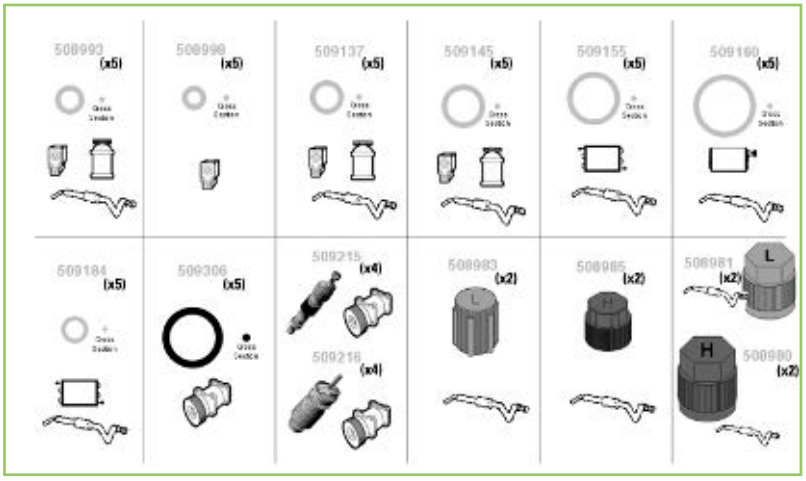

508980	M10x1.25	HP R134a	2	6
508981	M9x1	BP R134a	2	6
508983	M8x1	BP R134a	2	6
508985	M8x1	HP R134a	2	6
508993		Vert/green	5	20
508998			5	20
509137	N°6 (3/8")		5	20
509145			5	20
509155			5	20
509160			5	20
509184			5	20
509215	Valve R12/R134a		4	6
509216	Valve JRA R134a		4	6
509306		Noir/Black	5	20

Scale 1:1, page 372
Echelle 1:1, page 372
Escala 1:1, página 372
Escala 1:1, página 372
Scala 1:1, pagina 372
Schaal 1:1, pagina 372
Ölçek 1:1, sayfa 372
Scară 1:1, pagini 372
Skala 1:1, strona 372

TOYOTA

Valeo 509208

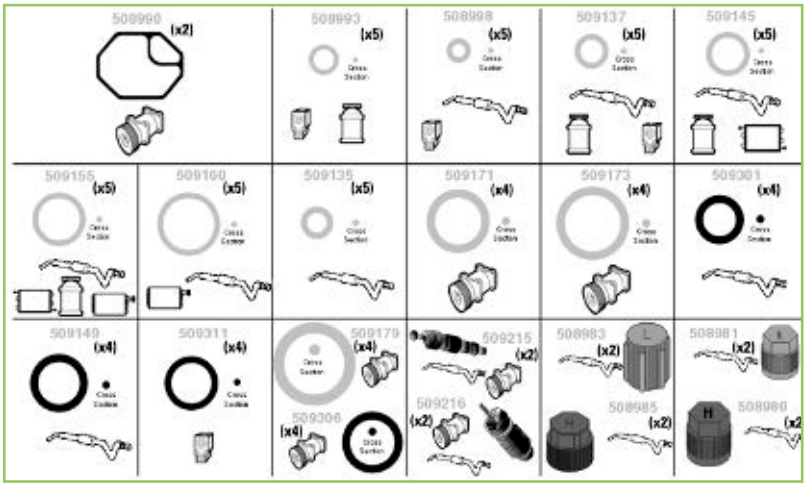

			Qty	Qty
508980	M10x1.25	HP R134a	2	6
508981	M9x1	BP R134a	2	6
508983	M8x1	BP R134a	2	6
508985	M8x1	HP R134a	2	6
508990			2	6
508993		Vert/green	5	20
508998			5	20
509135			5	20
509137	N°6 (3/8")		5	20
509145			5	20
509149		Noir/Black	5	20
509155			5	20
509160			5	20
509171	15mm Int D Comp		4	20
509173	18mm Int D Comp		4	20
509179			4	20
509215	Valve R12/R134a		2	6
509216	Valve JRA R134a		2	6
509301		Noir/Black	4	20
509306		Noir/Black	4	20
509311		Noir/Black	4	20

VOLKSWAGEN

Valeo 509189

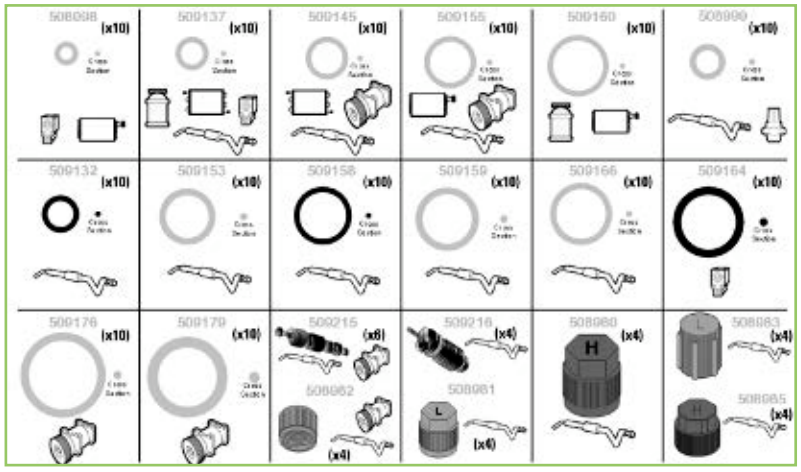

			Qty	Qty
508980	M10x1.25	HP R134a	4	6
508981	M9x1	BP R134a	4	6
508982	1/4"	R12	4	6
508983	M8x1	BP R134a	4	6
508985	M8x1	HP R134a	4	6
508998			10	20
508999	8 mm Hose		10	20
509132	9 mm	Noir/black	10	20
509137	N°6 (3/8")		10	20
509145	N° 8 Hose (1/2")		10	20
509153	14 mm Hose		10	20
509155	N°10 Hose (5/8")		10	20
509158	16 mm Hose	Noir/black	10	20
509159	16,5 mm Hose		10	20
509160	N°12 Hose (3/4")		10	20
509164		Noir/black	10	20
509166	17mm Hose		10	20
509176	24mm Int D Comp		10	20
509179			10	20
509215	Valve R12/R134a		6	6
509216	Valve JRA R134a		4	6

Scale 1:1, page 372
Echelle 1:1, page 372
Escala 1:1, página 372
Escala 1:1, página 372
Scala 1:1, pagina 372
Schaal 1:1, pagina 372
Ölçek 1:1, sayfa 372
Scară 1:1, pagini 372
Skala 1:1, strona 372

VOLVO

Valeo 509209

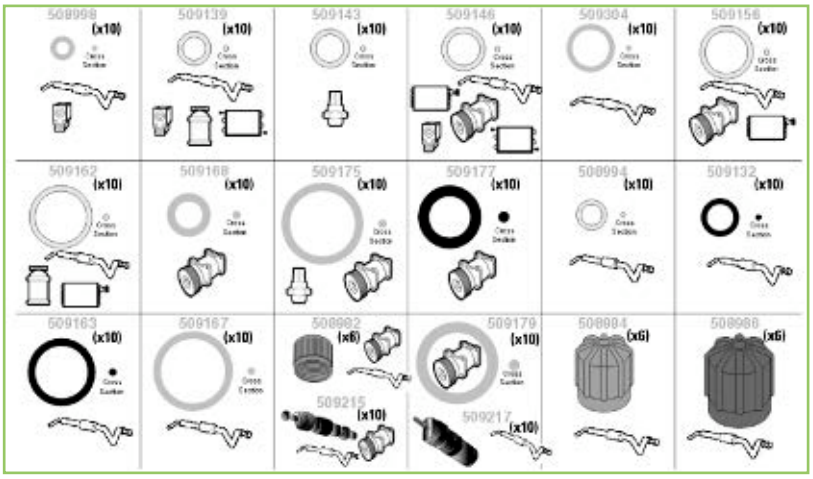

			Qty	Qty
508982	1/4"	R12	6	6
508984	M8x1	BP R134a	6	6
508986	M10x1	HP R134a	6	6
508994			10	20
508998			10	20
509132		Noir/black	10	20
509139	N°6 Hose	Jaune/Yellow	10	20
509143		Jaune/Yellow	10	20
509146		Jaune/Yellow	10	20
509156		Jaune/Yellow	10	20
509162		Jaune/Yellow	10	20
509163		Noir/Black	10	20
509167			10	20
509168			10	20
509175			10	20
509177		Noir/Black	10	20
509179			10	20
509215	Valve R12/R134a		10	6
509217	Valve M8 R134a		10	6
509304			10	20

Scale 1:1, page 372
Echelle 1:1, page 372
Escala 1:1, página 372
Escala 1:1, página 372
Scala 1:1, pagina 372
Schaal 1:1, pagina 372
Ölçek 1:1, sayfa 372
Scară 1:1, pagini 372
Skala 1:1, strona 372

Valeo	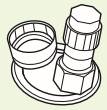			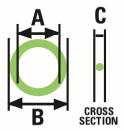	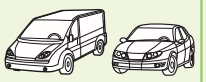	OE	
				A (mm)	B (mm)	C (mm)			
508988	JOINT - O'RING	Green	HNBR	**21,82**	**28,88**	**3,53**	**VARIOUS**		R4
508989	JOINT - O'RING	Black	Neoprene	**19,69**	**21,72**	**2,03**	**MERCEDES**		YORK
							PORSCHE		YORK
							SUBARU		YORK
508990	JOINT - O'RING	Black	Neoprene				**BMW**		NIPPONDENSO 10PA
							CHRYSLER		NIPPONDENSO 10PA
							HONDA		NIPPONDENSO 10PA
							MERCEDES		NIPPONDENSO 10PA
							TOYOTA		NIPPONDENSO 10PA
508991	JOINT - O'RING	Black	Neoprene				**BMW**		NIPPONDENSO 10PA17C
508992	JOINT - O'RING	Black	Neoprene				**MERCEDES**		
508993	JOINT - O'RING	Green	HNBR	**7,00**	**10,00**	**1,50**	**ACURA/HONDA**	80873-SLO-900	
							MAZDA	LB-52-61-JIX	
							MITSUBISHI	MB946604	
							TOYOTA	90099-14044	
							VOLVO/SAAB	3537797 / 1323387-9 / 3737797-7	
508994	JOINT - O'RING	Yellow	HNBR	**7,00**	**10,00**	**1,50**	**VOLVO/SAAB**	3537797 / 1323387-9 / 3737797-7	
508995	JOINT - O'RING	Green	HNBR	**6,80**	**10,54**	**1,87**	**ALFA ROMEO**	60813186	CALSONIC
							JAGUAR	KRS604001	CALSONIC
							ROVER	JUU10001 / JUU10090 / JUU10100	CALSONIC
508996	JOINT - O'RING	Black	Neoprene	**6,73**	**9,99**	**1,63**	**GM**	52450547	
							ALFA ROMEO	60811547	
508997	JOINT - O'RING	Green	HNBR	**6,73**	**9,99**	**1,63**	**MERCEDES**	140-997-06-45	
							PORSCHE	999-707-247-40	
508998	JOINT - O'RING	Green	HNBR	**4,47**	**8,03**	**1,78**	**ALFA ROMEO**	60811547	
							SAAB/VOLVO	3522587	
							OPEL/VAUX	3094213	
							VAG	803-260-749	

Valeo	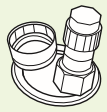			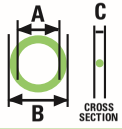	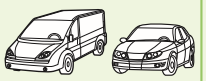	OE	
				A (mm)	B (mm)	C (mm)			
508999	JOINT - O'RING	Green	HNBR	**8,00**	**12,00**	**2,00**	**VAG**	7M0-820-749B	DSL KIKI
509130	JOINT - O'RING	Black	Neoprene	**9,25**	**14,03**	**2,39**	**GM**	52454645	
							ROVER	JUU10150 / JUU10230	
							OPEL/VAUX	1850712 / 1850713 / 52454645 / 6845673 / 30981758	
509131	JOINT - O'RING	Green	HNBR	**9,00**	**13,00**	**2,00**	**PORSCHE**	999-707-261-40	
509132	JOINT - O'RING	Black	Neoprene	**8,92**	**12,58**	**1,83**	**GM**	3093499 / 52450548 / 6555437	
							MERCEDES	140-997-11-45	
							PSA	6457R0	
							VAG	8A0-260-749-AF	
							VOLVO	3537501	
509133	JOINT - O'RING	Green	HNBR	**6,07**	**9,63**	**1,78**	**NISSAN**	92470-N8200	
							PORSCHE	999-707-284-40	
							ROVER	CDU1513	
509134	JOINT - O'RING	Green	HNBR	**10,00**	**15,00**	**2,50**	**MAZDA**	LB-55-61-JIX	MJS170
							OPEL/VAUX	1850716	MJS170
509135	JOINT - O'RING	Green	HNBR	**6,60**	**10,60**	**2,00**	**ACURA/HONDA**	80873-ST7-000	
							MAZDA	LB-51-61-JIX	
							ROVER	JUU10180	
							TOYOTA	90099-14119	
							OPEL/VAUX	1850702	
509136	JOINT - O'RING	Green	HNBR	**10,80**	**14,80**	**2,00**	**GM**	W702966	
							ALFA ROMEO	14450638	
							JAGUAR	KSG110624	
							ROVER	JUU10002 / JUU10090 / JUU10170	

Valeo	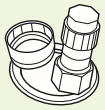			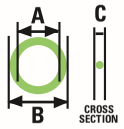	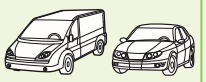	OE	
				A (mm)	B (mm)	C (mm)			
509137	JOINT - O'RING	Green	HNBR	**7,65**	**11,21**	**1,78**	**ALFA ROMEO**	60740985 (KIT) / 60778690 / 60811547	
							BMW	64-50-1-468-463	
							ACURA/HONDA	PH-749910 KIT	
							JAGUAR	KRC1154	
							NISSAN	92474-N8200	
							PSA	6457R5	
							ROVER	JUU10040 / JUU10050 / JUU10110	
							SAAB	3557499-0	
							OPEL/VAUX	3093509 / 52466777 / 90381761 / 1850707	
							VAG	8A0-260-749-AK / 803-260-749A	
							VOLVO	V1117961	
509138	JOINT - O'RING	Green	HNBR	**11,00**	**15,80**	**2,40**	**NISSAN**	92475-71L00	CALSONIC
							ROVER	JUU10140	CALSONIC
509139	JOINT - O'RING	Yellow	HNBR	**7,65**	**11,21**	**1,78**	**SAAB/VOLVO**	3522588-7 / 3557499-0 / 3537499-0	
509140	JOINT - O'RING	Green	HNBR	**10,50**	**14,50**	**2,00**	**MERCEDES**	1409970745	
							PORSCHE	99970725040	
509141	JOINT - O'RING	Green	HNBR	**7,38**	**11,00**	**1,81**	**MERCEDES**	140-997-07-45	
							PORSCHE	999-707-250-40	
							OPEL/VAUX	1843750 / 1845683 / 1850703 / 6845671 / 9288674	
509142	JOINT - O'RING	Green	HNBR	**9,25**	**12,81**	**1,78**	**ALFA ROMEO**	60811547 (KIT)	
							BMW	64-50-1-365-078	
							ROVER	JUU10110	
							SAAB/VOLVO	3737501-3	
509143	JOINT - O'RING	Yellow	HNBR	**9,25**	**12,81**	**1,78**	**SAAB/VOLVO**	3522598-6 / 3737501-3	
509144	JOINT - O'RING	Black	Neoprene	**11,91**	**16,69**	**2,39**	**GM**	52458698	
							JAGUAR	KSR110002	

Valeo	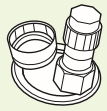				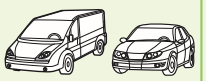	OE	
				A (mm)	B (mm)	C (mm)			
509145	JOINT - O'RING	Green	HNBR	**10,82**	**14,38**	**1,78**	**ALFA ROMEO**	60740985 (KIT) / 60778690 (KIT) / 60811547 (KIT)	
							BMW	64-50-1-468-464	
							ACURA/HONDA	80872-SLO-900 / PH-749910 KIT	
							JAGUAR	KRC1156	
							MAZDA	LB-54-61-JIX	
							MERCEDES	123-997-03-40	
							MITSUBISHI	MB946605	
							NISSAN	92471-N8200	
							PSA	6457R2	
							ROVER	CDU1514 / JUU10060 / JUU10100 / JUU10130 / JUU10160	
							SAAB/VOLVO	3537503-9 / V1117962	
							TOYOTA	90099-14046	
							OPEL/VAUX	1850701 / 3094214 / 52466779 / 90509602 / 9288674	
							VAG	7M0-820-749C / 8A0-260-749-AJ	
509146	JOINT - O'RING	Yellow	HNBR	**10,82**	**14,38**	**1,78**	**SAAB/VOLVO**	3522589-5 / 3537503-9 / V1117962	
509147	JOINT - O'RING	Green	HNBR	**19,18**	**24,10**	**2,46**	**OPEL/VAUX**	90347271	
509148	JOINT - O'RING	Green	HNBR	**13,60**	**18,46**	**2,43**	**JAGUAR**	KSG113624	CALSONIC
							ROVER	JUU10003 / JUU10080 / JUU10190	CALSONIC
							NISSAN	92473-N8210	CALSONIC
509149	JOINT - O'RING	Black	Neoprene	**14,00**	**19,00**	**2,50**	**GM**	52455831	NIPPONDENSO TV10C
							BMW	64-53-8-375-742	NIPPONDENSO TV10C
							ROVER	JUU10120 / JUU10240	NIPPONDENSO TV10C
							TOYOTA	90099-14121	NIPPONDENSO TV10C
509151	JOINT - O'RING	Green	HNBR	**14,00**	**17,00**	**1,50**	**JAGUAR**	KSG110001 / KSG111116 / KSG114001 / KSG114116	FX105V
509153	JOINT - O'RING	Green	HNBR	**14,30**	**18,90**	**2,30**	**VAG**	1J0-820-749	CALSONIC
							NISSAN	92475-72L00	CALSONIC
509154	JOINT - O'RING	Green	HNBR	**14,00**	**18,00**	**2,00**	**MERCEDES**	140-997-08-45	NIPPONDENSO TV12/14C
							PORSCHE	999-707-251-40	NIPPONDENSO TV12/14C

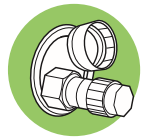

Valeo

Valeo	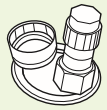			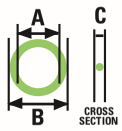			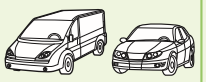	OE	
				A (mm)	B (mm)	C (mm)			
509155	JOINT - O'RING	Green	HNBR	**14,00**	**17,56**	**1,78**	**ALFA ROMEO**	60740985 (KIT) / 60778690 (KIT) / 60811547 (KIT)	
							BMW	64-50-1-468-465	
							JAGUAR	KRC1158	
							MAZDA	LB-56-61-JIX	
							MITSUBISHI	MB946606 / MR146634	
							NISSAN	92473-N8200	
							PSA	6457R3	
							ROVER	CDU1515 / JUU10120 / JUU10150	
							SAAB/VOLVO	3537507-0 / V1117963	
							OPEL/VAUX	1845685 / 1850732 / 3094215 / 52466780 / 9117115	
							VAG	8A0-260-749-AH / 803-260-749B	
509156	JOINT - O'RING	Yellow	HNBR	**14,00**	**17,56**	**1,78**	**SAAB/VOLVO**	3522590-3 / 3537507-0 / V1117963	
509157	JOINT - O'RING	Green	HNBR	**15,60**	**19,16**	**1,78**	**JAGUAR**	CBC4967	
							NISSAN	27739-B8065	
							OPEL/VAUX	1845686 / 6845674	
509158	JOINT - O'RING	Black	Neoprene	**16,00**	**19,56**	**1,78**	**GM**	52460742	
							VAG	1H0-820-749H	
509159	JOINT - O'RING	Green	HNBR	**16,50**	**21,36**	**2,43**	**VAG**	1J0-820-749A / 8A0-260-749-AG	CALSONIC
							NISSAN	92474-N8210	CALSONIC
509160	JOINT - O'RING	Green	HNBR	**17,17**	**20,73**	**1,78**	**ALFA ROMEO**	60811547 (KIT)	
							BMW	64-50-1-468-466	
							NISSAN	92477-N8200	
							PSA	6457R4	
							SAAB/VOLVO	3537521-1	
							OPEL/VAUX	3094216	
							VAG	803-260-749C	
509162	JOINT - O'RING	Yellow	HNBR	**17,17**	**20,73**	**1,78**	**SAAB/VOLVO**	3522591-0 / 3537521-1	

Valeo	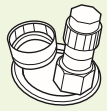			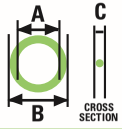	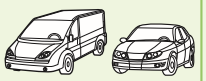	OE	
				A (mm) B (mm) C (mm)			
509163	JOINT - O'RING	Black	Neoprene	**17,60** **22,40** **2,40**	**SAAB**	6847526	NIHON DKV14B
					TOYOTA	90099-14126	NIHON DKV14B
509164	JOINT - O'RING	Black	Neoprene	**20,35** **23,91** **1,78**	**GM**	6555467	SEIKO SEIKI SS170PSS
					VAG	1H0-820-749G	SEIKO SEIKI SS170PSS
509165	JOINT - O'RING	Green	HNBR	**20,00** **24,80** **2,40**	**PORSCHE**	999-126-935-01	
					TOYOTA	90099-14131	
509166	JOINT - O'RING	Green	HNBR	**17,00** **21,00** **2,00**	**MERCEDES**	140-997-09-45	
					PORSCHE	999-707-252-40	
					VAG	1J0-820-749B	
509167	JOINT - O'RING	Green	HNBR	**21,60** **26,40** **2,40**	**SAAB/VOLVO**	3545441-2	DKS CH
509168	JOINT - O'RING	Green	HNBR	**9,19** **14,43** **2,62**	**BMW**	64-50-8-374-959	
					SAAB/VOLVO	3545628	
					OPEL/VAUX	1850714 / 52466778 / 90459254	
509169	JOINT - O'RING	Green	HNBR	**10,77** **16,01** **2,62**	**BMW**	64-50-8-375-741	
					OPEL/VAUX	1850726 / 52451134 / 90508320	
509170	JOINT - O'RING	Green	HNBR	**13,94** **19,18** **2,62**	**ALFA ROMEO**	14457180	
					OPEL/VAUX	1845690 / 1850710 / 52454646 / 90462478 / 90487638	
509171	JOINT - O'RING	Green	HNBR	**15,54** **20,78** **2,62**	**ALFA ROMEO**	60811547 (KIT)	HITACHI
					BMW	64-50-8-369-241	HITACHI
					JAGUAR	KSR115001 / KSR610001	HITACHI
509172	JOINT - O'RING	Green	HNBR	**17,12** **22,36** **2,62**	**OPEL/VAUX**	1850724 / 90508321	V5
509173	JOINT - O'RING	Green	HNBR	**18,72** **23,96** **2,62**	**ALFA ROMEO**	60811547 (KIT)	HITACHI
					OPEL/VAUX	1818941	HITACHI
509174	JOINT - O'RING	Green	HNBR	**20,29** **25,53** **2,62**	**VARIOUS**		SANDEN/DSL KIKI
509175	JOINT - O'RING	Green	HNBR	**21,89** **27,13** **2,62**	**SAAB/VOLVO**	1324181	
					OPEL/VAUX	1854905 / 6556407	

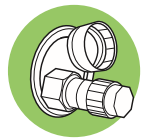

Valeo

Valeo	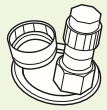			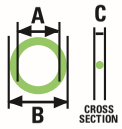 A (mm)	B (mm)	C (mm)	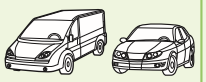		
509176	JOINT - O'RING	Green	HNBR	**23,47**	**28,71**	**2,62**	**BMW**	64-50-8-363-041	RV2
							OPEL/VAUX	1850723 / 90508322	RV2
							VAG	400-260-749A	RV2
509177	JOINT - O'RING	Black	Neoprene	**13,87**	**20,93**	**3,53**	**SAAB/VOLVO**	3522592 / 3537508	NIPPONDENSO 10P13/15
							OPEL/VAUX	1618132 / 1850711 / 90459251	NIPPONDENSO 10P13/15
509178	JOINT - O'RING	Green	HNBR	**15,47**	**22,53**	**3,53**	**OPEL/VAUX**	1843150 / 3091160	
509179	JOINT - O'RING	Green	HNBR	**20,22**	**27,28**	**3,53**	**ALFA ROMEO**	60811547 (KIT)	
							JAGUAR	JYX100140	
							MERCEDES	65556621	
							NISSAN	J2657-06W60	
							ROVER	JUU10140	
							OPEL/VAUX	1854800 / 5887997 / 6556621	
							VAG	701-820-749G	
509180	JOINT - O'RING	Green	HNBR	**23,05**	**30,07**	**3,51**	**OPEL/VAUX**	6558587	
509181	JOINT - O'RING	Green	HNBR	**12,01**	**15,77**	**1,88**	**OPEL/VAUX**	52456068	
509182	JOINT - O'RING	Green	HNBR	**14,81**	**18,57**	**1,88**	**OPEL/VAUX**	52456069	
509183	JOINT - O'RING	Green	HNBR	**4,70**	**7,54**	**1,42**	**NISSAN**	92472-N8200	
							ROVER	JUU10200 / JUU10430	
509184	JOINT - O'RING	Green	HNBR	**6,07**	**9,33**	**1,63**	**BMW**	64-50-8-390-605	FX105V
509185	JOINT - O'RING	Green	HNBR	**7,65**	**10,91**	**1,63**	**JAGUAR**	CAC89682	
509186	JOINT - O'RING	Green	HNBR	**9,60**		**1,88**	**OPEL/VAUX**	1854803 / 52456067	
509187	JOINT - O'RING	Black	Neoprene				**MERCEDES**		NIPPONDENSO 10PA15C
509298	JOINT - O'RING	Green	HNBR	**6,07**	**9,77**	**1,85**	**NISSAN**	92470-N8210	CALSONIC
509299	JOINT - O'RING	Green	HNBR	**10,12**	**13,82**	**1,85**	**CHRYSLER**		
							FORD		
							MAZDA		
509300	JOINT - O'RING	Green	HNBR	**10,90**	**15,76**	**2,43**	**NISSAN**	92472-N8210	CALSONIC

Valeo	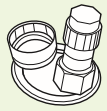				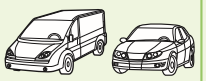	OE	
				A (mm)	B (mm)	C (mm)			
509301	JOINT - O'RING	Black	Neoprene	**11,00**	**16,00**	**2,50**	**ACURA/HONDA** **TOYOTA**	80872-ST7-000 90099-14120	HITACHI HITACHI
509302	JOINT - O'RING	Black	Neoprene	**13,00**	**18,00**	**2,50**	**ACURA/HONDA** **MAZDA**	80871-ST7-000 LB-57-61-JIX	HITACHI HITACHI
509303	JOINT - O'RING	Green	HNBR	**12,93**	**16,63**	**1,85**	**CHRYSLER** **FIAT/FORD** **HUYNDAÏ** **MAZDA** **MITSUBISHI**		
509304	JOINT - O'RING	Green	HNBR	**12,42**	**15,98**	**1,78**	**SAAB/VOLVO**	3545416	
509305	JOINT - O'RING	Black	Neoprene	**14,60**	**19,40**	**2,40**	**NISSAN**	92475-W2100	MJS170
509306	JOINT - O'RING	Black	Neoprene	**15,00**	**20,00**	**2,50**	**SUZUKI** **TOYOTA**		
509307	JOINT - O'RING	Green	HNBR	**15,68**	**19,54**	**1,93**	**FORD** **HUYNDAÏ** **MAZDA**		
509308	JOINT - O'RING	Black	Neoprene	**17,80**	**22,60**	**2,40**	**VARIOUS**		DSL KIKI
509309	JOINT - O'RING	Black	Neoprene	**21,60**	**26,40**	**2,40**	**HUYNDAÏ**		DSL KIKI
509311	JOINT - O'RING	Black	Neoprene	**13,46**	**17,62**	**2,08**	**TOYOTA**	90099-14045	HITACHI
509313	JOINT - O'RING	Black	Neoprene				**MITSUBISHI**		MITS MSC90C
509314	JOINT - O'RING	Black	Neoprene				**MITSUBISHI**		MIT. MSC105C
509321	JOINT - O'RING	Green	HNBR	**13,10**	**16,30**	**1,60**	**FORD**		MAT. SA1150
509550	JOINT - O'RING	Brown	HNBR	**11,05**	**14,32**	**2,67**	**VARIOUS**		
509555	JOINT - O'RING	Brown	HNBR	**13,65**	**16,87**	**2,61**	**VARIOUS**		
509556	JOINT - O'RING	Brown	HNBR	**16,51**	**20,30**	**2,63**	**VARIOUS**		
509736	JOINT - O'RING	Green	HNBR	**13,41**	**16,81**	**1,70**	**OPEL/GM**	1850732/90533807	
509737	JOINT - O'RING	Green	HNBR	**10,26**	**14,86**	**2,30**	**CHRYSLER**	04885803AA	
509738	JOINT - O'RING	Green	HNBR	**13,10**	**16,70**	**1,80**	**CHRYSLER**	47962940	

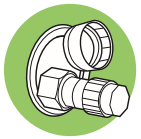

Valeo

Valeo	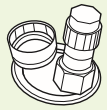			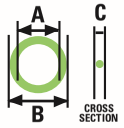	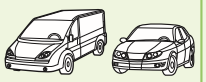	OE	
				A (mm)	B (mm)	C (mm)			
509739	JOINT - O'RING	Yellow	HNBR	**8,50**	**11,50**	**1,50**	**VOLVO**	6848027-6	
509740	JOINT - O'RING	Yellow	HNBR	**13,00**	**16,60**	**1,80**	**VOLVO**		
509741	JOINT - O'RING	Yellow	HNBR	**9,36**	**14,36**	**2,50**	**VOLVO**	3545628	
509742	JOINT - O'RING	Yellow	HNBR	**12,68**	**16,20**	**1,76**	**VOLVO**	3545416	
509743	JOINT - O'RING	Green	HNBR	**13,52**	**17,08**	**1,78**	**CITROËN**	97612-29000	
509744	JOINT - O'RING	Green	HNBR	**11,03**	**14,61**	**1,79**	**VW/AUDI**		
509745	JOINT - O'RING	Green	HNBR	**6,50**	**11,70**	**2,60**	**JAGUAR**	XR810305	
509746	JOINT - O'RING	Green	HNBR	**8,00**	**11,20**	**1,60**	**JAGUAR**	KSG108116	
509747	JOINT - O'RING	Black	Neoprene	**6,88**	**10,28**	**1,77**	**SUBARU/MAZDA**		
509748	JOINT - O'RING	Green	HNBR	**10,55**	**13,55**	**1,50**	**TOYOTA**	90099-14122	
509749	JOINT - O'RING	Green	HNBR	**6,37**	**9,97**	**1,80**	**DAEWOO**	09280-08001	
509750	JOINT - O'RING	Green	HNBR	**13,80**	**20,64**	**3,42**	**GM**	90459251	
509751	JOINT - O'RING	Green	HNBR	**10,70**	**13,77**	**1,53**	**TOYOTA**		
509752	JOINT - O'RING	Green	HNBR	**7,06**	**11,68**	**2,31**	**RANGE ROVER**	JUU100220	
509753	JOINT - O'RING	Green	HNBR	**14,36**	**19,74**	**2,69**	**FORD**		
509754	JOINT - O'RING	Green	HNBR	**8,20**	**11,76**	**1,78**	**SEAT**	7M0820749B	
509755	JOINT - O'RING	Green	HNBR	**14,40**	**19,20**	**2,40**	**SEAT**	1J0820749	
509756	JOINT - O'RING	Green	HNBR	**9,27**	**14,27**	**2,50**	**DAEWOO**	09280-19001	
509757	JOINT - O'RING	Green	HNBR	**8,50**	**11,94**	**1,72**	**JAGUAR**		
509758	JOINT - O'RING	Green	HNBR	**11,00**	**14,20**	**1,60**	**JAGUAR**	KSG111116	
509759	JOINT - O'RING	Green	HNBR	**13,46**	**17,63**	**2,08**	**TOYOTA**	90099-14045	
509760	JOINT - O'RING	Green	HNBR	**6,02**	**11,13**	**2,62**	**GM**	3093111	
509761	JOINT - O'RING	Green	HNBR	**12,37**	**17,46**	**2,62**	**GM**	3090774	
509763	JOINT - O'RING	Green	HNBR	**16,43**	**31,55**	**1,92**	**DAEWOO**	09280-18002	
509764	JOINT - O'RING	Green	HNBR	**18,90**	**26,21**	**3,66**	**FORD**	390697-S	
509765	JOINT - O'RING	Green	HNBR	**15,30**	**18,70**	**1,70**	**CHRYSLER**	05073616AA	
509766	JOINT - O'RING	Yellow	HNBR	**18,10**	**22,90**	**2,40**	**VOLVO**	6847526	

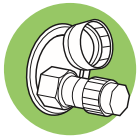

Valeo	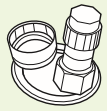			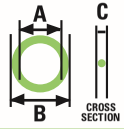	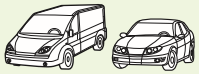	OE	
				A (mm)	B (mm)	C (mm)			
509767	JOINT - O'RING	Green	HNBR	**16,75**	**20,31**	**1,78**	**CHRYSLER**	4885094AA	
509768	JOINT - O'RING	Green	HNBR	**8,92**	**12,58**	**1,83**	**GM**	52450548	
509769	JOINT - O'RING	Green	HNBR	**11,49**	**16,05**	**2,28**	**VARIOUS**		
509770	JOINT - O'RING	Green	HNBR	**16,70**	**20,30**	**1,80**	**CHRYSLER**	4885094AA	
509771	JOINT - O'RING	Black	Neoprene	**13,94**		**2,51**	**VARIOUS**		

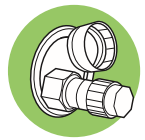

Valeo

Scale 1:1

508160

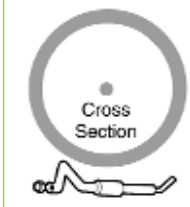

508988

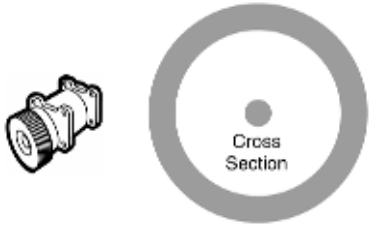

508989

508993

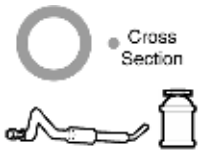

508995

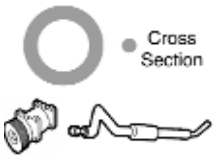

508997

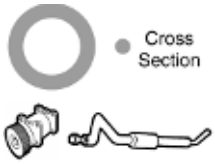

508998

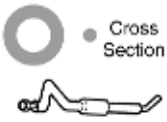

508999

509131

509133

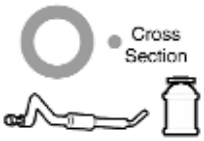

509134

509135

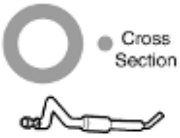

509136

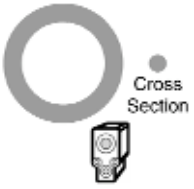

509137

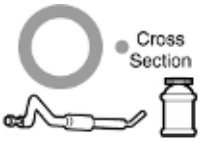

509138

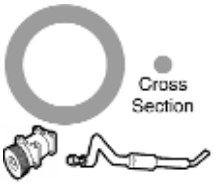

509141

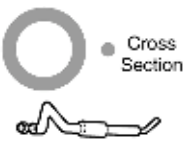

Scale 1:1
Echelle 1:1
Escala 1:1
Escala 1:1

Scala 1:1
Schaal 1:1
Ölçek 1:1
Scară 1:1

Skala 1:1

Scale 1:1

509142

509145

509147

509148

509153

509154

509155

509157

509159

509165

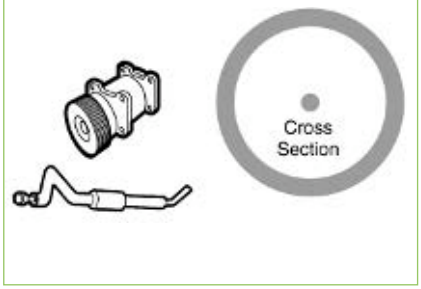

509166

509167

509169

509170

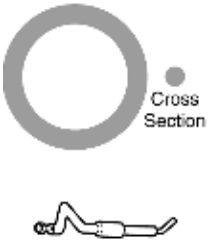

509171

509172

Scale 1:1
Echelle 1:1
Escala 1:1
Escala 1:1

Scala 1:1
Schaal 1:1
Ölçek 1:1
Scară 1:1

Skala 1:1

Scale 1:1

509173

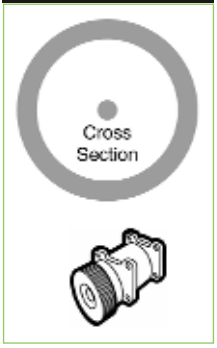

509174

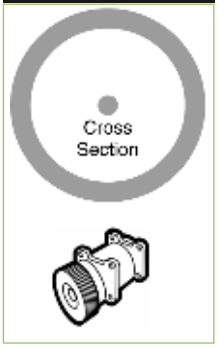

509175

509176

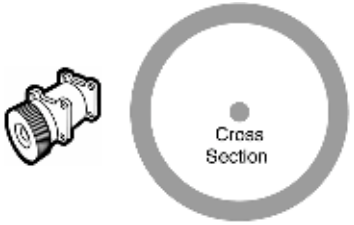

509178

509179

509180

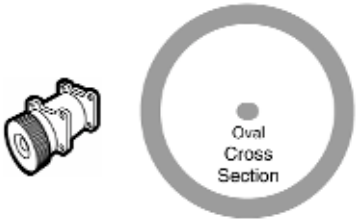

509181

509182

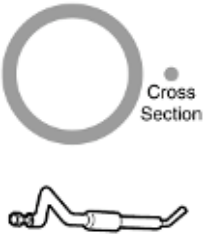

509183

509184

509185

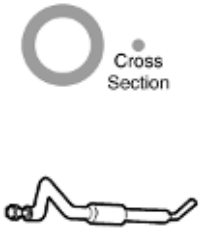

509186

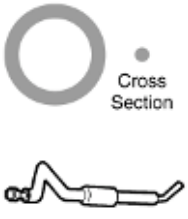

509188

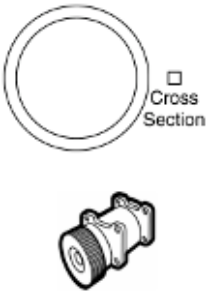

509211

509212

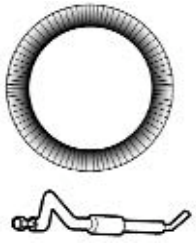

Scale 1:1
Echelle 1:1
Escala 1:1
Escala 1:1

Scala 1:1
Schaal 1:1
Ölçek 1:1
Scară 1:1

Skala 1:1

Scale 1:1

509213

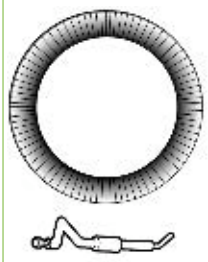

509214

509298

509299

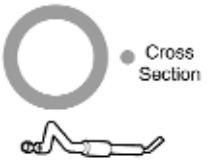

509300

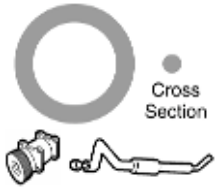

509303

509304

509307

509308

509550

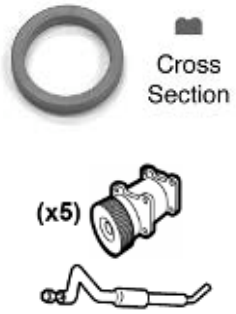

509555

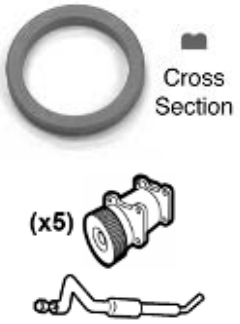

509556

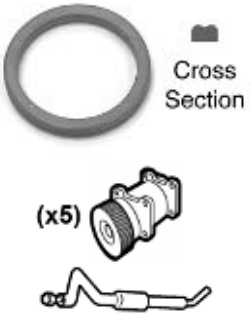

509736

509737

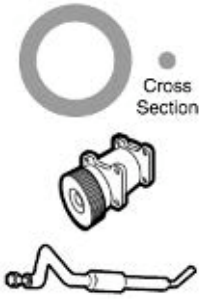

509738

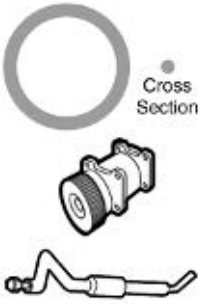

509739

Scale 1:1
Echelle 1:1
Escala 1:1
Escala 1:1

Scala 1:1
Schaal 1:1
Ölçek 1:1
Scară 1:1

Skala 1:1

Scale 1:1

509740

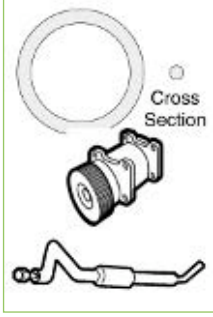

509741

509742

509743

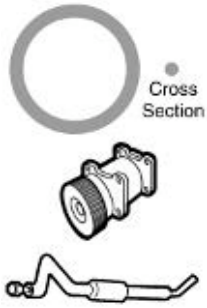

509744

509745

509746

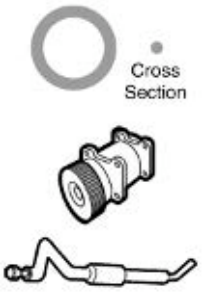

509747

509748

509749

509750

509751

509752

509753

509754

509755

Scale 1:1
Echelle 1:1
Escala 1:1
Escala 1:1

Scala 1:1
Schaal 1:1
Ölçek 1:1
Scară 1:1

Skala 1:1

Scale 1:1

509756

509757

509758

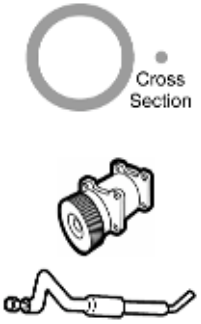

509759

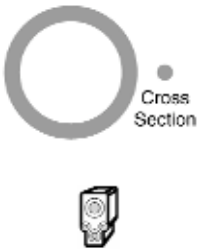

509760

509761

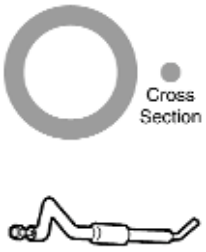

509763

509764

509765

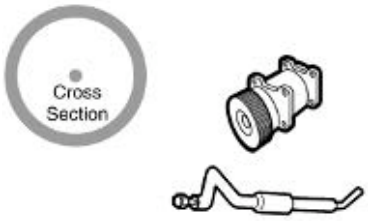

509766

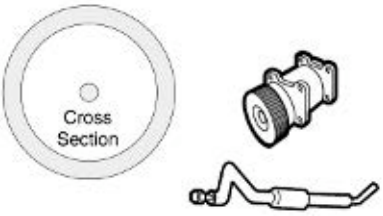

509767

509768

509769

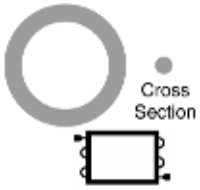

509770

509771

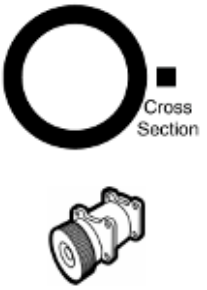

Scale 1:1
Echelle 1:1
Escala 1:1
Escala 1:1

Scala 1:1
Schaal 1:1
Ölçek 1:1
Scară 1:1

Skala 1:1

Scale 1:1

503332	509328	509329	509330
	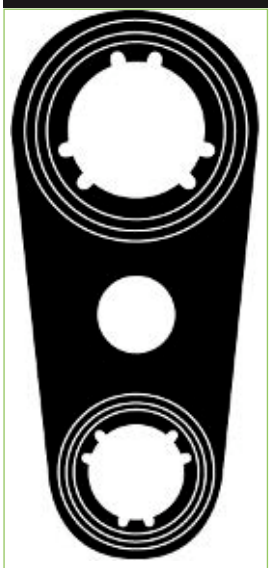		

509331	509333	509334	509335

509336

Scale 1:1
Echelle 1:1
Escala 1:1
Escala 1:1

Scala 1:1
Schaal 1:1
Ölçek 1:1
Scară 1:1

Skala 1:1

Scale 1:1

508972	508973	508974	508975

508976	508977	508978	508979
	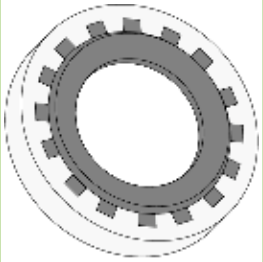		

509322	509323	509324	509325
	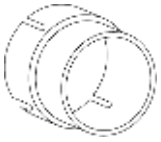	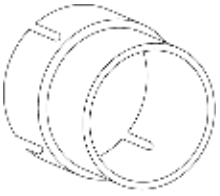	

509326	509327	509551	509552

509553	509554

Scale 1:1
Echelle 1:1
Escala 1:1
Escala 1:1

Scala 1:1
Schaal 1:1
Ölçek 1:1
Scară 1:1

Skala 1:1

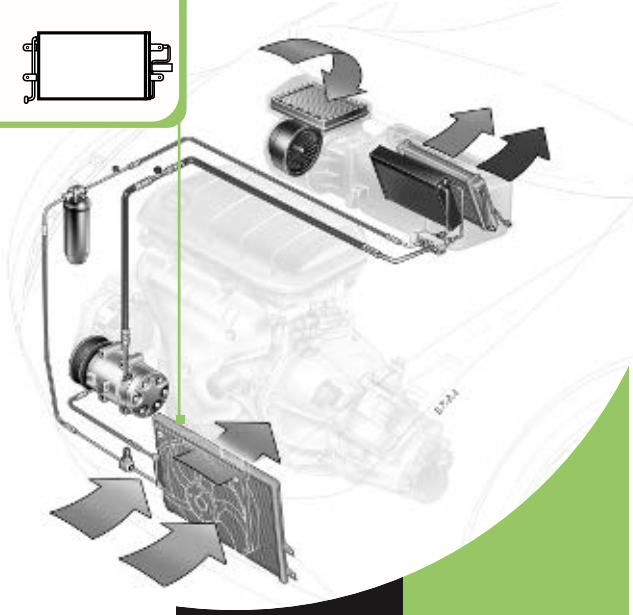

CONDENSER
CONDENSEUR
KONDENSATOR
CONDENSADOR
CONDENSADOR
CONDENSATORE
CONDENSOR
SKRAPLACZ
КОНДЕНСЕР
KONDENSER
KONDENZ TOR
CONDENSATOR
Συμπυκνωτής

3.1

EN

Function
The condenser is a key element of the system, it is located on the vehicle front face.
The condenser is a heat exchanger, in which refrigerant gas is liquefied (condensed) by transferring its heat to the flow of ambient air passing through it.

Replacement
The condenser must be replaced in case of crash, breakdown or leak.
Typical problems with condensers :
- Perforation due to impacts or presence of corrosion on the surface of the condenser
- Obturation/damage of the fins due to the presence of insects or impureties/high pressure water jet
- Leaks at the inlet and outlet fittings
- Low A/C performance due to the replacement of the specific condenser by an adaptable

Repair recommendations
- Choose the right condenser, according to car manufacturers
- Perform leak checks before and after a condensor replacement
- The A/C loop must be cleaned before installing the new condenser
- Ensure a good vacuum, before charging the refrigerant gas
- The filter drier / accumulator and expansion valve / orifice tube must be replaced together
- Replace the A/C Hoses assemblies if necessary (Valeo offer page 534)
- Use new seals and o'rings when replacing any components of the A/C Loop
- The quality is assured by the reinforcement of the European Regulation on A/C gas (leakage regulation)

FR

Fonction
Le condenseur est l'échangeur de chaleur placé en face avant véhicule. Il est toujours devant le radiateur.
Le fluide réfrigérant s'y liquéfie (condensation) en cédant sa chaleur à l'air qui le traverse.

Remplacement
Le condenseur doit être remplacé en cas d'accident, d'impact ou de fuite.
Les problèmes les plus typiques des condenseurs sont:
- Perforation due à des impacts ou à la corrosion.
- Obturation ou endommagement des ailettes par des insectes, de la saleté ou les jets haute pression.
- Fuites sur les raccords d'entrée et de sortie.
- Performance insuffisante due à la présence d'un produit adaptable.

Recommandations Valeo pour la Réparation
- Choisir le bon condenseur: correspondant à l'application véhicule et conforme à l'origine.
- Effectuer une recherche de fuites après le montage
- Nettoyer la totalité du circuit de réfrigérant après une casse de condenseur
- Remplacer impérativement le filtre déshydratant et le détendeur/orifice calibré.
- Tirer au vide pendant au moins 45 min après le montage.
- Remplacer les tuyaux si nécessaire (offre Valeo page 534)
- Remplacer les joints
- L'étanchéité doit être parfaitement assurée pour respecter la stricte réglementation européenne de limitation des émissions de réfrigérant.

DE

Funktion
Der Kondensator ist ein ein Hauptbautteil des Klimasystems; er befindet sich an der Fahrzeugfront.
Der Kondensator ist ein Wärmetauscher, in dem verdichtetes Kühlgas verflüssigt wird, wobei die Wärme des Gases an die durch den Kondensator strömende Luft abgegeben wird.

Austausch
Der Kondensator muss im Fall einer Beschädigung oder eines Lecks ausgewechselt werden.
Häufige Probleme mit Kondensatoren:
- Undichte Stellen infolge von Einschlägen oder Korrosion an der Kondensatoroberfläche
- Verstopfung der Lamellen aufgrund von Defekten oder Schmutz bzw. Beschädigung durch hohen Wasserdruck
- Lecks an den Anschlüssen
- Unzureichende Leistung der Klimaanlage, nachdem der Kondensator durch ein inadäquates Teil ersetzt wurde

Reparaturempfehlungen
- Wählen Sie einen der Vorgabe des Automobilherstellers entsprechenden Kondensator
- Prüfen Sie vor und nach dem Auswechseln des Kondensators, ob Lecks vorhanden sind
- Reinigen und spülen Sie den Klimakreislauf vor dem Installieren des neuen Kondensators mit geeignetem Material
- Stellen Sie beim Einfüllen des Kühlgases sicher, dass das erforderliche Vakuum vorhanden ist
- Wechseln Sie gleichzeitig mit dem Kondensator den Filtertrockner/-akkumulator und das Expansionsventil bzw. die Festdrossel aus
- Wenn nötig, die Schläuche auswechseln (Valeo-Angebot, Seite 534)
- Verwenden Sie beim Auswechseln von Bauteilen des Klimakreislaufs **grundsätzlich** neue Dichtungen und O-Ringe
- Keine Kompromisse bei der Erfüllung der Qualitätsanforderungen der verschärften EU-Bestimmungen über Kühlgas (Verordnung (EG) Nr.842/2006)

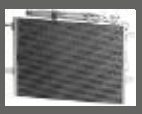

SP

Función

El condensador es un elemento clave del sistema que se encuentra en la parte frontal del vehículo.

El condensador es un intercambiador de calor en el que el gas refrigerante es licuado (condensado) por transferencia de su calor al flujo de aire que lo atraviesa.

Sustitución

El condensador debe reemplazarse en caso de choque, avería o fuga.

Problemas típicos con los condensadores:

- Perforación debida a impactos o presencia de corrosión en la superficie del condensador.
- Obturación/daño de las aletas debido a la presencia de insectos o impurezas o un chorro de agua a presión.
- Fugas en los dispositivos de entrada y salida.
- Ineficacia de la climatización debida a la sustitución del condensador específico por uno adaptable.

Recomendaciones para la reparación

- Elegir el condensador adecuado, correspondiente a las indicaciones del constructor del vehículo.
- Verificar la ausencia de fugas antes y después de sustituir el condensador.
- Limpiar el circuito de climatización con el equipo adecuado antes de instalar el nuevo condensador.
- Hacer el vacío antes de recargar el gas refrigerante.
- Sustituir el filtro deshidratante / acumulador y la válvula de expansión / orificio calibrado.
- Sustituir las tuberias de climatización si es necesario (oferta Valeo, página 534).
- Utilizar juntas nuevas al sustituir cualquier componente del circuito de climatización.
- Hay que comprometerse con la calidad, de acuerdo con el refuerzo del Reglamento Europeo sobre gases de climatización (reglamento sobre fugas).

IT

Funzione

Il condensatore è un elemento fondamentale del sistema, si trova nella parte anteriore del veicolo. Il condensatore è uno scambiatore di calore, che ha il compito di portare allo stato liquido il fluido refrigerante allo stato di vapore sottraendogli calore (condensazione) e cedendolo al flusso d'aria ambiente che attraversa lo attraversa

Sostituzione

Il condensatore deve essere sostituito in caso di urto, rottura, intasamento interno o perdita.

Problemi più frequenti relativi al condensatore:

- Perforazione dovuta ad urti , corrosione interna dovuta alla formazione di acido
- Otturazione/danneggiamento delle alette a causa della presenza di insetti o sporcizia, getto d'acqua ad alta pressione
- Perdite sui raccordi d'ingresso e di uscita (vibrazioni eccessive)
- Scarso rendimento della climatizzazione a causa della sostituzione del condensatore specifico con uno adattabile

Raccomandazioni Valeo per la riparazione

- Scegliere il condensatore adeguato, conforme alle specifiche del fabbricante del veicolo
- Verificare le perdite prima e dopo la sostituzione del condensatore
- Pulire e se il caso fare il lavaggio del circuito di climatizzazione con un'attrezzatura adeguata prima di montare il nuovo condensatore
- Controllare che il livello di vuoto sia corretto prima di ricaricare il gas refrigerante
- Sostituire il filtro disidratatore / accumulatore e la valvola d'espansione / valvola a tubo d'espansione
- Cambiare le canalizzazioni aria condizionata se necessario (offerta Valeo a pag. 534)
- Utilizzare nuove guarnizioni e nuovi o'ring quando si sostituisce qualsiasi componente del circuito A/C
- Nessun compromesso con la qualità approvato con un rafforzamento della normativa europea sul gas A/C (relativa alle perdite)

NL

Functie

De condensor is een hoofdelement van het aircosysteem en bevindt zich aan de voorzijde van het voertuig.

De condensor is een warmtewisselaar waarin koelmiddel-gas vloeibaar wordt gemaakt (gecondenseerd) door de warmte ervan over te brengen op de omgevingslucht die erdoorheen stroomt.

Vervanging

De condensor moet worden vervangen na een aanrijding en in geval van defecten of lekken.

Problemen die het meest voorkomen bij condensors :

- Perforatie veroorzaakt door corrosie op het condensoroppervlak
- Verstopping/beschadiging van de koelribben veroorzaakt door insecten of vuil, of door een hogedruk waterspuit
- Lekken aan de inlaat- en uitlaatkoppelstukken
- Slechte werking van het airconditioningsysteem doordat de specifieke condensor is vervangen door een aanpasbaar model

Aanbevelingen bij de reparatie

- Kies de juiste condensor, overeenkomstig de specificaties van de autoconstructeur
- Check op lekken voor en na de vervanging van de condensor
- Het airconditioningsysteem reinigen en doorspoelen met geschikte apparatuur, voordat u de nieuwe condensor monteert
- Zorg voor een goed vacuüm, voordat u het systeem vult met koelmiddel-gas
- De filter droger / accumulator en expansieventiel / orifice tube moet worden vervangen
- Vervang indien nodig de airco-leidingen van het airconditioningsysteem (Valeo aanbod pagina 534)
- Gebruik nieuwe dichtingen en O-ringen wanneer u onderdelen van het airconditioningsysteem vervangt
- Breng de kwaliteit niet in gevaar zoals die is goedgekeurd door versterking van de Europese regelgeving over koelgas in airconditioningsystemen (regelgeving inzake gaslekken)

PL

Funkcja

Skraplacz jest kluczowym elementem systemu, znajduje się w przedniej części pojazdu. Skraplacz jest wymiennikiem ciepła, w którym kondensowany (skraplany) jest czynnik chłodniczy poprzez przeniesienie jego ciepła do strumienia przepływającego przez niego powietrza atmosferycznego.

Wymiana

Skraplacz należy wymienić po uszkodzeniu w wyniku wypadku lub po wykryciu nieszczelności.

Typowe problemy ze skraplaczami:

- Perforacja wywołana pojawieniem się korozji na powierzchni skraplacza
- Zatkanie / uszkodzenie finsów wywołane obecnością owadów lub odkształcenie finsów strumieniem wody pod wysokim ciśnieniem
- Wycieki na wlocie i wylocie skraplacza
- Niska wydajność klimatyzacji ze względu na zastąpienie skraplacza nieodpowiednim zamiennikiem.

Zalecenia naprawy

- Dobierz odpowiedni skraplacz, zgodny z zaleceniem producenta pojazdu
- Wykonaj kontrolę szczelności przed i po wymianie skraplacza
- Układ A/C musi być oczyszczony przed instalacją nowego skraplacza
- Zapewnij dobry poziom próżni przed rozpoczęciem napełniania czynnika chłodniczego
- Filtr osuszacz / zasobnik i zawór rozprężny / dławik należy wymieniać jednocześnie
- Wymień przewody A/C w razie potrzeby (oferta Valeo na stronie 534)
- Zastosuj nowe uszczelki i oringi w przypadku wymiany jakichkolwiek elementów układu A/C
- Przestrzeganie Europejskiego Rozporządzenia w sprawie gazu A/C (dot. postępowania w przypadku wycieku) gwarantuje wysoką jakość usług.

RU

Функция

Конденсатор - ключевой элемент системы и расположен в передней части автомобиля. Конденсатор - это теплообменник, в котором хладагент сжижается (конденсируется) путем передачи своего тепла потоку окружающего воздуха, проходящему через него.

Замена

Конденсатор следует заменить в случае аварии, поломки или утечки.

Типичные проблемы с конденсаторами :

- Появление отверстий под действием ударов или коррозии на поверхности конденсатора
- Засорение / повреждение ребер под действием насекомых или загрязнений / струй воды высокого давления
- Утечки на входной и выходной арматуре
- Низкая производительность кондиционирования воздуха из-за неправильной замены определенного конденсатора на адаптированный

Рекомендации по ремонту

- Выбрать подходящий конденсатор согласно требованиям производителя автомобиля
- Проверить на утечку перед и после замены конденсатора
- Систему кондиционирования воздуха следует прочистить перед установкой нового конденсатора
- Убедиться в полной герметичности перед заправкой хладагентом
- Заменить вместе фильтр-влагоотделитель / накопитель и расширительный клапан / дроссельную трубку
- Заменить узлы шлангов кондиционирования воздуха (если необходимо) (предложение от Valeo на стр. 534)
- Использовать новые прокладки и кольцевые уплотнения при замене компонентов системы кондиционирования воздуха
- Жесткие требования к качеству в соответствии с европейскими нормами по кондиционированию воздуха (контроль утечек хладагента)

CZ

Funkce
Kondenzátor je klíčovým prvkem systému a je umístěn v přední části vozidla. Kondenzátor je výměník tepla, ve kterém dochází ke zkapalnění plynného chladiva (kondenzaci) přenosem tepla z chladiva na vzduch proudící přes tepelný výměník.

V měna
Kondenzátor musí být vyměněn v případě nehody, poškození nebo úniku.
Typické problémy s kondenzátory:
- Proražení v důsledku nárazu nebo koroze kondenzátoru
- Ucpání/poškození chladicích žeber v důsledku přítomnosti hmyzu nebo nečistot/poškození vysokotlakou vodou
- Úniky u šroubení na vstupu a výstupu
- Nízký výkon klimatizace v důsledku záměny kndenzátoru za jiný, nesprávný typ

Doporučení pro opravy
- Zvolte správný kondenzátor odpovídající údajům výrobce vozidla
- Před výměnou a po výměně kondenzátoru proveďte kontrolu těsnosti okruhu!
- Před instalací nového kondenzátoru musí být okruh klimatizace pečlivě vyčištěn!
- Při správnou výměnu chladiva je nutné vytvořit hluboké vakuum!
- Vysoušeč a expanzní ventil nebo akumulátor a škrtící tryska by musí být vyměňovány společně.
- V případě potřeby vyměňte jednotku trubek klimatizace (nabídka Valeo na straně 534)
- Při výměně komponentů v okruhu klimatizace použijte nová těsnění a O-kroužky.
- Dodržení všech předpisů týkajících se kvality podle evropských předpisů pro náplně klimatizací (předpisy týkající se úniků)

HU

Szerepe
A klímahűtő a rendszer egyik legfontosabb alkatrésze, a jármű elején található.
A klímahűtő az a hőcserélő, amelyben a hűtőközeg gáz halmazállapotból folyadékká kondenzál és átadja a hőt a környező levegőnek.

Cseréje
A klímahűtőt ütközés vagy szivárgás esetén kell cserélni.
Gyakran el forduló meghibásodások:
- a klímahűtő kilyukad a felületén lévő korrózió hatására
- a lamellák megsérülnek, eldeformálódnak az erős szennyeződés vagy magasnyomású mosópisztoly használata miatt
- szivárgás a be- és kivezető csövek csatlakozásánál
- csökkentett teljesítmény, ha az eredeti alkatrészt utángyártottra cserélték

Javítási tanácsok
- Válassza a jármű típusának és modelljének megfelelő klímahűtőt.
- Végezzen szivárgástesztet a klímahűtő cseréje előtt és után is.
- Öblítse át a rendszert.
- A hűtőközeg visszatöltése előtt végezzen alapos vákuumozást.
- Egyidejűleg cserélje ki a szárítószűrőt és az expanziós szelepet is.
- Cserélje ki az esetlegesen sérült, szivárgó csöveket is (a katalógusban a 534. oldalon)
- Mindig használjon új gyűrűket és alátéteket, ha a klímarendszer valamelyik alkatrészét kicseréli.
- Ne kössön kompromisszumot, válasszon minőségi alkatrészt, amely megfelel a szigorú európai szabályzásnak a hűtőgázokról.

RO

Funcţiune:
Condensatorul este un element cheie al sistemului, se află în partea frontală a vehiculului. Condensatorul este un schimbător de căldură în care gazul refrigerant este lichefiat (condensat), căldura acestuia se transferă la curentul de aer înconjurător, care trece prin el.

Înlocuire:
În cazul unei defecţiuni sau scurgeri condensatorul trebuie înlocuit.

Probleme tipice cu condensatorul:
- Perforaţie cauzată de lovituri sau de coroziune pe suprafaţa condensatorului.
- Obturaţie / defecţiunea paletelor cauzată de insecte sau impurităţi / jet de apă cu înaltă presiune
- Scurgeri la racordurile de umplere şi evacuare.
- Performanţă scăzută datoritã schimbării condensatorului specific cu unul adaptabil.

Recomandări de reparaţie:
- Alegeţi condensatorul potrivit fabricaţiei maşinii
- Verificaţi să nu existe scurgeri înainte şi după înlocuirea condensatorului.
- Circuitul de aer condiţionat trebuie curăţat în mod potrivit înaintea instalării condensatorului nou.
- Schimbarea gazul refrigerant trebuie efectuat în vid.
- Filtrul uscător / acumulatorul şi ventilul de extindere / tubul deschiderii trebuie înlocuite împreună.
- Înlocuiţi grupul de furtunuri de aer condiţionat dacă este necesar (Oferta Valeo pagina 534)
- Folosiţi racorduri şi inele de etanţare noi la înlocuirea oricărei piese a sistemului de aer condiţionat.
- Calitatea este asigurată prin respectarea prevederilor Regulamentului European privind gazele AC (regulament împotriva scurgerii)

TU

İşlev:
Kondenser sistemin anahtar rolü oynayan elemanıdır ve aracın ön tarafında yer almaktadır. Kondenser bir ısı değiştiricisidir. Dış ortam etkisiyle içindeki soğutucu akışkan sıvılaşır (yoğuşur).

Değişim:
Kondenser kaza, kırılma ve sızıntı durumlarında değiştirilmelidir.

Kompresörde en çok rastlanan sorunlar:
- Korozyon sebebiyle kondenser yüzeyinde meydana gelen aşınma ve delikler
- Fin aralarının böcek çarpması, kirlenme yüzünden tıkanması, basınçlı yıkamadan finleri deforme olması gibi sebeplerden oluşan hasarlar.

- Giriş çıkış bağlantılarında sızıntı
- Araç uygulamasının gerektirdiği özel kondenser yerine yerine uyan bir ürünün sebep olduğu düşük klima performansı

Onarım önerileri:
- Araç üreticisi tarafından önerilen doğru kondenseri kullanınız
- Değişimden önce ve sonra sızıntı kontrolü yapılmalıdır
- Yeni kondenser takılmadan önce sistem dikkatle temizlenmelidir
- Gaz doldururken yeterli basınç oluştuğuna emin olunuz
- Kurutucu, detantör, orifis tüpü beraberce değiştirilmelidir.
- Gerekiyorsa klima hortumları da değiştirilmelidir (ürün sunumu için bkz.sayfa 534)
- Klima çevriminde yer alan herhangi bir parçanın değişiminde yeni conta ve o-ringler kullanınız.
- Klima gazları konusunda ilgili Avrupa düzenlemelerinin (sızıntı yönetmeliği) gereklilikleri uygulanmalıdır

GR

Λειτουργία :
Ο συμπυκνωτής είναι βασικό στοιχείο του συστήματος κλιματισμού. Βρίσκεται στην μπροστινή πλευρά του οχήματος.
Είναι ένας εναλλάκτης θερμότητας μέσα στον οποίο υγροποιείται το φρέον (συμπυκνώνεται) μεταφέροντας την θερμότητά του στο περιβάλλον μέσω της ροής του αέρα.

Αντικατάσταση :
Ο συμπυκνωτής πρέπει να αντικατασταθεί σε περίπτωση τρακαρίσματος, βλάβης ή διαρροής.

Συνηθισμένα προβλήματα των συμπυκνωτών :
- Διάτρηση λόγω χτυπημάτων ή διάβρωση της επιφάνειας του συμπυκνωτή
- Εμφραξη/ζημία των πτερυγίων λόγω εντόμων ή ακαθαρσιών/έγχυση νερού με υψηλή πίεση
- Διαρροές στα εξαρτήματα εισόδου και εξόδου
- Κακή απόδοση οφειλόμενη στην αντικατάσταση του συμπυκνωτή από άλλο χαμηλότερης ποιότητας

Συστάσεις απο την Valeo για την επισκευή :

- Επιλέξτε το σωστό συμπυκνωτή, σύμφωνα με το όχημα
- Κάντε έλεγχο για διαρροές πριν και μετά την αντικατάσταση του συμπυκνωτή.
- Πρέπει να καθαρίσετε το κύκλωμα κλιματισμού με ενα κατάλληλο μηχάνημα πριν την εγκατάσταση του νέου συμπυκνωτή.
- Εξασφαλίστε ότι υπάρχει καλό κενό πριν το γέμισμα με το ψυκτικό υγρό.
- Αντικαταστήστε μαζί το ξηραντήρα (φίλτρο υγρού)/συσσωρευτή και τη βαλβίδα εκτόνωσης/βαλβίδα αντεπιστροφής.
- Αντικαταστήστε τις σωληνώσεις του συστήματος, εφόσον αυτό είναι απαραίτητο (βλέπε κατάλογο Valeo σελίδα 534).
- Οταν αντικαθιστάτε οποιοδήποτε εξάρτημα του κυκλώματος, κατόπιν να χρησιμοποιείτε καινούργια στεγανοποιητικά λαστιχάκια και τσιμούχες.
- Η απόλυτη στεγανοποίηση πρέπει να εξασφαλιστεί όπως ορίζεται από τον ευρωπαϊκό κανονισμό για τον περιορισμό των εκπομπών φρέον.

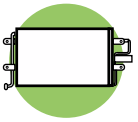

		CC				OE	Valeo	DIM	TECH

ABARTH

GRANDE PUNTO

1.4 T-Jet 155 16V **1.4 T-Jet 180 16V**	E	1368	199A8.000	R134	09/07 ▸ 06/10	55700408	**818192**	623 302	AL

ALFA ROMEO

145

1.3 i	E	1351	AR33501	N	09/94 ▸ 12/96	60610662	**816973**	549 352	AL
1.4 i Twin Spark 16V	E	1370	AR33503	N	12/96 ▸ 06/01	60630383	**816973**	549 352	AL
1.6 i	E	1596	AR33201	N	09/94 ▸ 12/96	60610662	**816973**	549 352	AL
1.6 i Twin Spark 16V	E	1598	AR32102,AR67601	N	12/96 ▸ 06/01	60630383	**816973**	549 352	AL
1.7 i 16V	E	1712	AR33401	N	09/94 ▸ 12/96	60610662	**816973**	549 352	AL
1.8 i Twin Spark 16V **1.8 i Twin Spark AGV 16V**	E	1747	AR32201,AR67106,AR67199	N	12/96 ▸ 06/01	60630383	**816973**	549 352	AL
2.0 i 16V,2.0 i AGV 16V	E	1970	AR32301,AR67204,AR67299	N	11/95 ▸ 06/01	60630383	**816973**	549 352	AL
1.9 JTD	D	1910	AR32302	N	03/99 ▸ 06/01	60630383	**816973**	549 352	AL

146

1.3 i	E	1351	AR33501	N	12/94 ▸ 12/96	60610662	**816973**	549 352	AL
1.4 i Twin Spark 16V	E	1370	AR33503	N	12/96 ▸ 06/01	60630383	**816973**	549 352	AL
1.6 i	E	1596	AR33201	N	12/94 ▸ 12/96	60610662	**816973**	549 352	AL
1.6 i Twin Spark 16V	E	1598	AR67601	N	12/96 ▸ 06/01	60630383	**816973**	549 352	AL
1.7 i 16V	E	1712	AR33401	N	12/94 ▸ 12/96	60610662	**816973**	549 352	AL
1.8 i Twin Spark 16V **1.8 i Twin Spark AGV 16V**	E	1747	AR32201,AR67106	N	12/96 ▸ 06/01	60630383	**816973**	549 352	AL
2.0 i 16V **2.0 i Twin Spark AGV 16V**	E	1970	AR32301,AR67204	N	10/95 ▸ 06/01	60630383	**816973**	549 352	AL
1.9 JTD	D	1910	AR32302	N	03/99 ▸ 06/01	60630383	**816973**	549 352	AL
1.9 TDs	D	1929	AR33601,AR67501	N	12/94 ▸ 06/01	60630383	**816973**	549 352	AL

147 (2000>2004)

1.6 i Twin Spark 16V	E	1598	AR32104, AR37203		10/00 ▸	46768973	**817463**	574 339	AL
2.0 i Twin Spark 16V	E	1970	AR32310		10/00 ▸	46768973	**817463**	574 339	AL
3.2 i V6 24V	E	3179	932A.000	R134	02/03 ▸ 09/04	60668109	**817818**	524 344	AL
1.9 JTD	D	1910	937A2.000		10/00 ▸ 09/04	46790658	**817527**	568 341	AL
1.9 JTD	D	1910	192B1.000	R134	12/02 ▸ 09/04	60668109	**817818**	524 344	AL

147 (2004>)

1.9 JTD, 1.9 JTDM	D	1910	192A5.000, 937A4.000 937A5.000	R134	10/04 ▸	60668109	**817818**	524 344	AL
1.6 i Twin Spark 16V	E	1598	AR32104,AR37203	R134	10/04 ▸	46768973	**817463**	574 339	AL
1.9 JTD,1.9 JTD 16V,1.9 JTDM	D	1910	192A5.000,192B1.000 937A4.000,937A5.000 937A6.000	R134	10/04 ▸	60668109	**817818**	524 344	AL
1.9 JTD,1.9 JTDM	D	1910	182B9.000,192B1.000 937A2.000,939A7.000	R134	10/04 ▸	46790658	**817527**	568 341	AL
2.0 i Twin Spark 16V	E	1970	AR32310	R134	10/04 ▸	46768973	**817463**	574 339	AL

155

1.6 i Twin Spark 16V	E	1598	AR67601	N	04/96 ▸ 08/97	60610662	**816973**	549 352	AL
1.7 i Twin Spark 16V	E	1747	AR67106	N	04/96 ▸ 08/97	60610662	**816973**	549 352	AL
1.7 i Twin Spark	E	1749	AR67103	N	03/95 ▸ 08/97	60610662	**816973**	549 352	AL
2.0 i Twin Spark 16V	E	1970	AR67204,AR67299	N	03/95 ▸ 08/97	60610662	**816973**	549 352	AL
2.0 i Turbo	E	1995	AR67203	N	11/91 ▸ 08/97	60807597	**816973**	549 352	AL

156 (97>2003)

1.6 i Twin Spark 16V ▸ 0325639	E	1598	AR32102, AR32103 AR67601		09/97 ▸ 04/00	60628820	**817527**	568 341	AL
1.6 i Twin Spark/16V	E	1598	AR32102, AR32104 AR67601	R134	04/00 ▸	60668109	**817818**	524 344	AL

• **New** Nouveau **Neu** Nuevo **Novo** Nuovo **Nieuw** Nowi **Новый** Novy **Nou** Yeni **Νέους**

⏭ **Multi-product Crosslist on section 1** Cross List Multi-produits, Section 1
Crossliste siehe Kapitel 1 Crosslist Multiproducto en la sección 1
Lista Multi-produto na secção 1 Cross-list Multi prodotto nella sezione 1
Rubriek 1 : Cross list "alle produkten" Kombinovaný převodník v sekci 1
Crosslist multi-produse, secţie 1 **Çoklu ürün çapraz listesi bölüm 1 tedir**
Αντιστοιχίες προϊόντων στο κεφάλαιο 1

		CC				OE	Valeo	DIM	TECH
ALFA ROMEO (.../...)									
156 (97>2003) (.../...)									
1.8 i Twin Spark/16V ▸0325639	E	1747	AR32201, AR32205		09/97 ▸ 04/00	60628820	**817527**	568 341	AL
1.8 i Twin Spark/16V	E	1747	AR32201, AR32205	+/ R134	04/00 ▸	60668109	**817818**	524 344	AL
2.0 i Twin Spark/16V ▸385548	E	1970	AR32301, AR32310		09/97 ▸ 04/00	60628820	**817527**	568 341	AL
2.0 JTS 16V, 2.0 i Twin Spark 2.0 i Twin Spark 16V	E	1970	937A1.000, AR32301 AR32310	+/ R134	04/00 ▸ 03/03	60668109	**817818**	524 344	AL
2.5 i V6 24V ▸0325639	E	2492	AR32401, AR32405		09/97 ▸ 04/00	60628820	**817527**	568 341	AL
2.5 i V6 24V	E	2492	AR32401, AR32405	+/ R134	04/00 ▸	60668109	**817818**	524 344	AL
1.9 JTD ▸0325639	D	1910	AR32302		09/97 ▸ 07/00	60628820	**817527**	568 341	AL
1.9 JTD, 1.9 JTD 16V 0325640 ▸	D	1910	192B1.000, 937A2.000 AR32302, AR37101	+/ R134	04/00 ▸ 03/03	60668109	**817818**	524 344	AL
2.4 JTD ▸0325639	D	2387	839A6.000, AR32501		09/97 ▸ 04/00	60628820	**817527**	568 341	AL
2.4 JTD 0325640 ▸	D	2387	839A6.000, 841C.000 AR32501	+/ R134	04/00 ▸ 03/03	60668109	**817818**	524 344	AL
156 (2003>)									
1.6 i Twin Spark 16V	E	1598	AR32104		04/03 ▸	60628820	**817527**	568 341	AL
1.8 i Twin spark 16V	E	1747	AR32205		04/03 ▸	60628820	**817527**	568 341	AL
2.0 JTS 16V, 2.0 TwinSpark 16V 2.0 i Twin Spark 16V	E	1970	932A2.000, 937A1.000 AR32310	+/ R134	04/03 ▸	60668109	**817818**	524 344	AL
2.5 i V6 24V	E	2492	AR32405	+/ R134	04/03 ▸ 09/05	60668109	**817818**	524 344	AL
1.9 JTD, 1.9 JTD 16V	D	1910	192A5.000, 937A2.000 937A4.000, 937A5.000	+/ R134	04/03 ▸	60668109	**817818**	524 344	AL
2.4 JTD 10V, 2.4 JTD 20V	D	2387	841C.000, 841G.000	+/ R134	04/03 ▸	60668109	**817818**	524 344	AL
166 (98>2003)									
2.5 i V6 24V	E	2492	AR34201		10/98 ▸ 10/00	82487879	**814293**	488 387	AL
3.0 i V6 24V	E	2959	AR34301		10/98 ▸ 10/00	82487879	**814293**	488 387	AL
MITO									
1.4 T-jet GPL 120 16V	F	1368	198A4.000	+/ R134	01/10 ▸	51826520	**818192**	623 302	AL
1.4 TB 16V	E	1368	198A1.000,198A4.000 199A8.000,940A2.000 955A2.000,955A8.000	+/ R134	04/08 ▸	51826520	**818192**	623 302	AL
1.3 MJTD 16V	D	1248	199A3.000/F,199B1.000	+/ R134	12/08 ▸	51826520	**818192**	623 302	AL
1.6 MJTD 16V	D	1598	198A2.000/F,955A3.000 955A4.000	+/ R134	04/08 ▸	51826520	**818192**	623 302	AL
AUDI									
80 (86>91)									
1.4	E	1405	SE		09/86 ▸	893260403	**814291**	613 307	AL
1.6	E	1595	PP,RN,RNA		09/86 ▸	893260403	**814291**	613 307	AL
1.8,1.8 i	E	1781	DZ,JN,JV,NE,PM,RU,SF		09/86 ▸	893260403	**814291**	613 307	AL
1.9 i	E	1857	SD		08/86 ▸	893260403	**814291**	613 307	AL
1.6 D,1.6 TD	D	1588	JK,RA		02/87 ▸	893260403	**814291**	613 307	AL
80 (91>95)									
1.6 i	E	1595	ABB		03/92 ▸	8A0260403D	**814286**	618 338	AL
2.0 E	E	1984	ADW		12/93 ▸ 06/95	8A0260403AC	**814296**	359 499	AL
2.0 E,2.0 E 16V,2.0 S,2.0 i 16V	E	1984	6A,ABK,ABT,ACE		09/91 ▸	8A0260403D	**814286**	618 338	AL
2.2 i Turbo 20V	E	2226	ABY		02/93 ▸ 06/95	8A0260403AC	**814296**	359 499	AL
2.3 E	E	2309	NG		09/91 ▸ 06/95	8A0260403AC	**814296**	359 499	AL
2.3 E	E	2309	NG		09/91 ▸	893260403L	**814288**	359 499	AL
2.6 E V6	E	2598	ABC		07/92 ▸	8A0260403D	**814286**	618 338	AL

Valeo recommends replacing the receiver drier with the condenser
Pensez à changer la bouteille déshydratante avec le condenseur
Denken Sie daran, beim Wechsel des Kondensators auch den Trockner zu erneuern
Piense en la sustitución del filtro deshidratante con el condensador
A Valeo recomenda substituir o filtro desidratante com o condensador
Ricordatevi di sostituire il filtro disidratatore insieme al condensatore
Bij de vervanging van de condensor, vervang tevens de filter-droger

Valeo zaleca wymianę filtra osuszacza wraz ze skraplaczem
Рекомендируем замену осушителя вместо с конденсором
Spolu s kondenzátorem je nutné vyměnit také vysoušeč
Nu uitați sa schimbați uscatorul cu condensatorul
Kondenser değişimlerinde nem alıcının da değiştirilmesi gerektiğini dikkate alınız
Πρέπει να αντικαταστήσετε το φίλτρο υγρού μαζί με το συμπυκνωτή

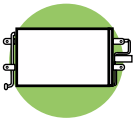

		CC				OE	Valeo	DIM	TECH

AUDI (.../...)

80 (91>95) (.../...)

2.8 i V6	E	2771	AAH		09/91 ▸	8A0260403D	**814286**	618 338	AL

90 (84>87)

1.8 i	E	1781	JN		06/84 ▸ 07/86	893260403	**814291**	613 307	AL
2.0 i	E	1994	HP,JL,JS		10/84 ▸ 07/86	893260403L	**814288**	359 499	AL
2.2 i	E	2226	HY,JT,KV		06/84 ▸ 03/87	893260403L	**814288**	359 499	AL

90 (87>91)

2.0 i,2.0 i 20V	E	1994	NM,PS		04/87 ▸ 12/91	893260403L	**814288**	359 499	AL
2.2 i	E	2226	KV		04/87 ▸ 12/91	893260403L	**814288**	359 499	AL
2.3 i,2.3 i 20V	E	2309	7A,NG		04/87 ▸ 1992	893260403L	**814288**	359 499	AL
1.6 TD	D	1588	RA		04/88 ▸	893260403	**814291**	613 307	AL

100 (82>90)

1.8,1.8 i	E	1781	4B,DR		01/88 ▸ 07/89	443260403F	**814295**	564 307	AL
2.0 i	E	1994	RT		01/88 ▸ 12/90	443260403F	**814295**	564 307	AL
2.2 i	E	2144	WC		05/83 ▸ 07/90	443260403F	**814295**	564 307	AL
2.2 Turbo,2.2 i,2.2 i Turbo	E	2226	HX,KF,KU,MC		08/86 ▸ 12/90	443260403F	**814295**	564 307	AL
2.3 i	E	2309	NF		01/88 ▸ 12/90	443260403F	**814295**	564 307	AL
2.0 D,2.0 TD	D	1986	CN,NC		05/83 ▸ 12/90	443260403F	**814295**	564 307	AL
2.4 D	D	2370	3D		08/89 ▸ 12/90	443260403F	**814295**	564 307	AL
2.5 TDi	D	2460	1T		01/90 ▸ 12/90	443260403F	**814295**	564 307	AL

200 (83>90)

2.2 Turbo	E	2226	1B,2B,MC		08/85 ▸ 12/90	443260403F	**814295**	564 307	AL
2.3 Turbo 20V	E	2309	3B		08/88 ▸ 12/90	443260403F	**814295**	564 307	AL

CABRIOLET

2.3 E	E	2309	NG		06/91 ▸ 07/94	893260403L	**814288**	359 499	AL

COUPÉ (88>96)

2.0 i 16V	E	1984	6A		01/92 ▸	8A0260403D	**814286**	618 338	AL
2.0 E 20V	E	1994	NM		11/88 ▸ 07/91	893260403L	**814288**	359 499	AL
2.2 i	E	2226	KV		11/88 ▸ 07/91	893260403L	**814288**	359 499	AL
2.2 i Turbo 20V	E	2226	ABY		08/92 ▸ 05/95	8A0260403AC	**814296**	359 499	AL
2.3 E	E	2309	NG		11/88 ▸ 07/94	8A0260403AC	**814296**	359 499	AL
2.3 E,2.3 Turbo 20V,2.3 i 20V	E	2309	3B,7A,NG		11/88 ▸	893260403L	**814288**	359 499	AL
2.6 E V6	E	2598	ABC		08/92 ▸	8A0260403D	**814286**	618 338	AL
2.8 i V6	E	2771	AAH		08/91 ▸	8A0260403D	**814286**	618 338	AL

RS2 (94>95)

2.2 Turbo	E	2226	ADU		03/94 ▸ 06/95	8A0260403AC	**814296**	359 499	AL

A1 (2010>)

1.2 TFSI	E	1197	CBZA		05/10 ▸	6R0820411G	**•814364**		AL
1.4 TFSI 16V	E	1390	CAVG,CAXA,CPTA,CTHG		05/10 ▸	6R0820411G	**•814364**		AL
2.0 TFSI	E	1948	CDLH		03/12 ▸	6R0820411J	**•814364**		AL
1.6 TDI 16V	D	1598	CAYB,CAYC		05/10 ▸	6R0820411G	**•814364**		AL
2.0 TDI 16V	D	1968	CFHB,CFHD		09/11 ▸	6R0820411J	**•814364**		AL

A2

1.4 i 16V	E	1390	AUA, BBY		07/01 ▸	8Z0260403D	**817570**	508 401	AL
1.6 FSI	E	1595	BAD		01/02 ▸	8Z0260403D	**817570**	508 401	AL
1.2 TDi BZ-2-000001 ▸	D	1191	ANY		07/01 ▸	8Z0260403D	**817570**	508 401	AL
1.4 TDi BZ-2-000001 ▸	D	1422	AMF, BHC		07/01 ▸	8Z0260403D	**817570**	508 401	AL

A3 (96>2003)

1.6 i	E	1595	AEH, AKL, APF, AVU, BFQ		09/96 ▸ 06/03	1J0820413N	**817244**	548 361	AL

• **New** Nouveau **Neu** Nuevo **Novo** Nuovo **Nieuw** Nowi **Новый** Novy **Nou** Yeni **Νέους**

⏭ **Multi-product Crosslist on section 1** Cross List Multi-produits, Section 1
Crossliste siehe Kapitel 1 Crosslist Multiproducto en la sección 1
Lista Multi-produto na secção 1 Cross-list Multi prodotto nella sezione 1
Rubriek 1 : Cross list "alle produkten" Kombinovaný převodník v sekci 1
Crosslist multi-produse, secţie 1 **Çoklu ürün çapraz listesi bölüm 1 tedir**
Αντιστοιχίες προϊόντων στο κεφάλαιο 1

		CC				OE	Valeo	DIM	TECH
AUDI (.../...)									
A3 (96>2003) (.../...)									
1.8 i 20V, 1.8 i Turbo 20V	E	1781	AGN/U, AJQ, APG/P, AQA ARX, ARY/Z, AUM, AUQ		09/96 ▸ 06/03	1J0820413N	**817244**	548 361	AL
1.9 TDi	D	1896	AGR, AHF, ALH, ASV, ASZ ATD, AXR		09/96 ▸ 06/03	1J0820413N	**817244**	548 361	AL
A3 (2003>2008)									
1.6 i	E	1595	BGU, BSE, BSF	+/ R134	07/03 ▸ 06/08	1K0820411H	**817777**	584 401	AL
1.6 FSi	E	1598	BAG, BLF, BLP	+/ R134	07/03 ▸ 06/08	1K0820411E	**817777**	584 401	AL
1.8 TFSi	E	1798	BYT	+/ R134	07/03 ▸ 06/08	1K0820411H	**817777**	584 401	AL
2.0 FSi, 2.0 FSi 16V 2.0 TFSi 16V	E	1984	AXW, AXX, BLR, BLX, BLY BMB, BVY, BVZ, BWA	+/ R134	07/03 ▸ 06/08	1K0820411H	**817777**	584 401	AL
3.2 i V6 24V	E	3189	BDB, BMJ, BUD	+/ R134	07/03 ▸ 06/08	1K0820411E	**817777**	584 401	AL
1.9 TDi	D	1896	BKC, BLS, BXE	+/ R134	07/03 ▸ 06/08	1K0820411H	**817777**	584 401	AL
2.0 TDi, 2.0 TDi 16V	D	1968	BMM/N, AZV, BKD, BUY	+/ R134	07/03 ▸ 06/08	1K0820411E	**817777**	584 401	AL
A3 (2008>)									
1.4 TFSi	E	1390	CAX	+/ R134	07/08 ▸	1K0820411P	**817777**	584 401	AL
1.8 TFSi 16V	E	1798	CDA	+/ R134	07/08 ▸	1K0820411P	**817777**	584 401	AL
2.0 TFSi 16V	E	1984	CCZ	+/ R134	07/08 ▸	1K0820411P	**817777**	584 401	AL
1.2 TFSi 16V	E	1197	CBZB	+/ R134	04/10 ▸	1K0820411Q	**817777**	584 401	AL
1.6 i	E	1595	BSE,BSF,CCSA,CMXA	+/ R134	07/08 ▸	1K0820411Q	**817777**	584 401	AL
1.6 Tdi	D	1598	CAYB,CAYC	+/ R134	05/09 ▸	1K0820411Q	**817777**	584 401	AL
1.9 Tdi	D	1896	BLS/F,BXE	+/ R134	07/08 ▸	1K0820411Q	**817777**	584 401	AL
2.0 TDi 16V	D	1968	CBAA/F,CBAB/F,CBBB/F CFFA,CFFB,CFGB,CLJA	+/ R134	07/08 ▸	1K0820411Q	**817777**	584 401	AL
3.2 i V6 24V	E	3189	BUB	+/ R134	07/08 ▸ 05/09	1K0820411Q	**817777**	584 401	AL
A4 (94>2000)									
1.6 i	E	1595	ADP, AHL, ANA, ARM		11/94 ▸ 11/00	8D0260403C	**816967**	575 421	AL
1.8 i, 1.8 i 20V 1.8 i Turbo 20V	E	1781	ADR, AEB, AFY, AJL, ANB APT, APU, ARG, ARK, AWT		11/94 ▸ 11/00	8D0260403H	**816967**	575 421	AL
2.4 i V6, 2.4 i V6 30V	E	2393	AFM, AGA, AJG, ALF, AML APS, APZ, ARJ		07/95 ▸ 11/00	8D0260403H	**816967**	575 421	AL
2.6 i V6 ▸ 8D-T-200000	E	2598	ABC, ACZ		11/94 ▸ 12/98	8D0260403C	**816967**	575 421	AL
2.7 i V6 30V	E	2671	AGB		02/99 ▸ 10/00	8D0260403G	**817840**	578 421	AL
2.8 i V6, 2.8 i V6 30V ▸ 8D-V-400 000	E	2771	AAH, ACK, ALG, AMX, APR AQD, ATQ, ATX		11/94 ▸ 11/00	8D0260403C	**816967**	575 421	AL
1.9 TDi ▸ 8D-V-400 000	D	1896	1Z, AFF, AFN, AHU, AVG		11/94 ▸ 11/00	8D0260403H	**816967**	575 421	AL
1.9 TDi	D	1896	AHH, AJM, ATJ		08/97 ▸ 10/00	8D0260403G	**817840**	578 421	AL
2.5 TDi V6, 2.5 TDi V6 24V	D	2496	AFB, AKN		11/97 ▸ 10/00	8D0260403G	**817840**	578 421	AL
A4 (2000>2004)									
1.6 i ▸ 8E-3-320 000	E	1595	ALZ		12/00 ▸ 01/03	8E0260403B	**817569**	608 401	AL
1.6 i 8E-3-320 001 ▸	E	1595	ALZ		01/03 ▸ 12/04	8E0260403D	**817741**	568 401	AL
1.8 i Turbo 20V ▸ 8E-3-320 000	E	1781	AMB, AVJ, BEX, BFB		12/00 ▸ 01/03	8E0260403B	**817569**	608 401	AL
1.8 i Turbo 20V 8E-3-320 001 ▸	E	1781	AMB, AVJ, BEX, BFB		01/03 ▸	8E0260403D	**817741**	568 401	AL
2.0 FSI, 2.0 i ▸ 8E-3-320 000	E	1984	ALT, AWA		12/00 ▸ 01/03	8E0260403B	**817569**	608 401	AL
2.0 FSI, 2.0 i 8E-3-320 001 ▸	E	1984	ALT, AWA		01/03 ▸ 12/04	8E0260403D	**817741**	568 401	AL
2.4 i V6, 2.4 i V6 30V ▸ 8E-3-320 000	E	2393	AMM, BDV		09/01 ▸ 01/03	8E0260403B	**817569**	608 401	AL
2.4 i V6, 2.4 i V6 30V 8E-3-320 001 ▸	E	2393	AMM, BDV		01/03 ▸ 12/04	8E0260403D	**817741**	568 401	AL

Valeo recommends replacing the receiver drier with the condenser
Pensez à changer la bouteille déshydratante avec le condenseur
Denken Sie daran, beim Wechsel des Kondensators auch den Trockner zu erneuern
Piense en la sustitución del filtro deshidratante con el condensador
A Valeo recomenda substituir o filtro desidratante com o condensador
Ricordatevi di sostituire il filtro disidratatore insieme al condensatore
Bij de vervanging van de condensor, vervang tevens de filter-droger

Valeo zaleca wymianę filtra osuszacza wraz ze skraplaczem
Рекомендируем замену осушителя вместо с конденсором
Spolu s kondenzátorem je nutné vyměnit také vysoušeč
Nu uitați sa schimbați uscatorul cu condensatorul
Kondenser değişimlerinde nem alıcının da değiştirilmesi gerektiğini dikkate alınız
Πρέπει να αντικαταστήσετε το φίλτρο υγρού μαζί με το συμπυκνωτή

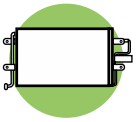

		CC				OE	Valeo	DIM	TECH
AUDI (.../...)									
A4 (2000>2004) (.../...)									
3.0 i 30V, 3.0 i V6 30V ▸ 8E-3-320 000	E	2976	ASN, AVK, BBJ		12/00 ▸ 01/03	8E0260403B	**817569**	608 401	AL
3.0 i 30V, 3.0 i V6 30V 8E-3-320 001 ▸	E	2976	ASN, AVK, BBJ		01/03 ▸ 12/04	8E0260403D	**817741**	568 401	AL
1.9 TDi ▸ 8E-3-320 000	D	1896	AVB, AVF, AWX		12/00 ▸ 01/03	8E0260403B	**817569**	608 401	AL
1.9 TDi 8E-3-320 001 ▸	D	1896	AVB, AVF, AWX		01/03 ▸ 12/04	8E0260403D	**817741**	568 401	AL
2.5 TDi V6, 2.5 TDi V6 24V ▸ 8E-3-320 000	D	2496	AKE, AYM, BDH, BFC		12/00 ▸ 01/03	8E0260403B	**817569**	608 401	AL
2.5 TDi 24V, 2.5 TDi V6 **2.5 TDi V6 24V** 8E-3-320 001 ▸	D	2496	AKE, BAU, BCZ, BDG, BDH BFC		01/03 ▸ 12/04	8E0260403D	**817741**	568 401	AL
A4 (2004>)									
1.6 i	E	1595	ALZ		11/04 ▸ 06/08	8E0260403R	**818190**	608 381	AL
1.8 i Turbo 20V	E	1781	BFB		11/04 ▸ 06/08	8E0260403R	**818190**	608 381	AL
2.0 i 20V, 2.0 TFSi 16V	E	1984	ALT, BGB, BWE		11/04 ▸ 06/08	8E0260403R	**818190**	608 381	AL
2.0 TFSi 16V	E	1996	BUL		11/04 ▸ 06/08	8E0260403R	**818190**	608 381	AL
3.0 i 30V	E	2976	BBJ		11/04 ▸ 06/08	8E0260403P	**818190**	608 381	AL
3.2 i FSi V6 24V	E	3123	AUK		11/04 ▸ 06/08	8E0260403P	**818190**	608 381	AL
1.9 TDi	D	1896	BKE, BRB		11/04 ▸ 06/08	8E0260403R	**818190**	608 381	AL
2.0 TDi, 2.0 TDi 16V	D	1968	BLB, BNA, BPW, BRD/E/F BVF		11/04 ▸ 06/08	8E0260403R	**818190**	608 381	AL
2.5 TDi V6 24V 8E-5-533 001 ▸	D	2496	BCZ, BDG		05/05 ▸ 06/08	8E0260403R	**818190**	608 381	AL
2.7 TDi 24V	D	2698	BPP, BSG		01/06 ▸ 06/08	8E0260403R	**818190**	608 381	AL
3.0 TDi V6 24V ▸ 8E-5-475 000	D	2967	ASB, BKN		11/04 ▸ 06/08	8E0260403J	**818190**	608 381	AL
A4 (2007>)									
1.8 TFSi 16V	E	1798	CABA,CABB,CDHA,CDHB	+⛽	11/07 ▸	8K0260403AB	**•814370**	678 341	AL
2.0 TFSi 16V	E	1984	CDNB,CDNC	+⛽	06/08 ▸	8K0260403M	**•814370**	678 341	AL
3.2 FSi V6 24V	E	3197	CALA	+⛽	11/07 ▸	8K0260403E	**•814370**	678 341	AL
2.0 TDi 16V	D	1968	CAGA,CAGB/F,CAGC/F CAHA/F,CAHB/F	+⛽	11/07 ▸	8K0260403AB	**•814370**	678 341	AL
2.7 TDi V6 24V	D	2698	CAMA,CAMB,CGKA/F,CGKB/F	+⛽	11/07 ▸	8K0260403M	**•814370**	678 341	AL
3.0 TDi V6 24V	D	2967	CAPA,CCWA/F,CCWB/F	+⛽	11/07 ▸	8K0260403AB	**•814370**	678 341	AL
A4 CABRIOLET (2002>2006)									
1.8 i Turbo 20V ▸ 8H-3-026 000	E	1781	BFB		07/02 ▸ 01/03	8E0260403B	**817569**	608 401	AL
1.8 i Turbo 20V 8H-3-026 001 ▸	E	1781	BFB		01/03 ▸ 12/05	8E0260403D	**817741**	568 401	AL
2.0 i 20V	E	1984	ALT		11/04 ▸ 12/05	8E0260403D	**817741**	568 401	AL
2.4 i V6 30V ▸ 8H-3-026 000	E	2393	AMM, BDV		04/02 ▸ 01/03	8E0260403B	**817569**	608 401	AL
2.4 i V6 30V	E	2393	AMM, BDV		01/03 ▸ 12/05	8E0260403D	**817741**	568 401	AL
3.0 i V6 30V ▸ 8H-3-026 000	E	2976	ASN, BBJ		04/02 ▸ 01/03	8E0260403B	**817569**	608 401	AL
3.0 i V6 30V	E	2976	ASN, BBJ		01/03 ▸ 12/05	8E0260403D	**817741**	568 401	AL
2.5 TDI V6 ▸ 8H-3-026 000	D	2496	BFC		08/02 ▸ 01/03	8E0260403B	**817569**	608 401	AL
2.5 TDI V6	D	2496	BCZ, BDG, BFC		01/03 ▸ 12/05	8E0260403D	**817741**	568 401	AL
A4 CABRIOLET (2006>)									
1.8 i Turbo 20V	E	1781	BFB		01/06 ▸	8E0260403T	**817741**	568 401	AL
2.0 TFSi 16V	E	1996	BWE		01/06 ▸	8E0260403T	**817741**	568 401	AL
3.2 i FSi V6 24V	E	3123	AUK		01/06 ▸	8E0260403Q	**817741**	568 401	AL

• **New** Nouveau **Neu** Nuevo **Novo** Nuovo **Nieuw** Nowi **Новый** Novy **Nou** Yeni **Νέους**

⏭ **Multi-product Crosslist on section 1** Cross List Multi-produits, Section 1
Crossliste siehe Kapitel 1 Crosslist Multiproducto en la sección 1
Lista Multi-produto na secção 1 Cross-list Multi prodotto nella sezione 1
Rubriek 1 : Cross list "alle produkten" Kombinovaný převodník v sekci 1
Crosslist multi-produse, secţie 1 **Çoklu ürün çapraz listesi bölüm 1 tedir**
Αντιστοιχίες προϊόντων στο κεφάλαιο 1

		CC				OE	Valeo	DIM	TECH
AUDI (.../...)									
A4 CABRIOLET (2006>) (.../...)									
2.0 TDi, 2.0 TDi 16V	D	1968	BPW, BRC		01/06 ▸	8E0260403N	**817741**	568 401	AL
3.0 TDi V6 24V	D	2967	ASB, BKN		01/06 ▸	8E0260403R	**818190**	608 381	AL
A5 (2007>2012)									
1.8 TFSi 16V	E	1798	CABD	+▯	10/07 ▸	8K0260403M	•**814370**	678 341	AL
2.0 TFSi 16V	E	1984	CDNC	+▯	06/08 ▸	8K0260403AB	•**814370**	678 341	AL
3.2 FSi V6 24V	E	3197	CALA	+▯	06/07 ▸	8K0260403AB	•**814370**	678 341	AL
2.0 TDi 16V	D	1968	CAHA/F,CAHB/F	+▯	01/08 ▸	8K0260403AB	•**814370**	678 341	AL
2.7 TDi V6 24V	D	2698	CAMA,CAMB,CGKA/F,CGKB/F	+▯	07/07 ▸	8K0260403E	•**814370**	678 341	AL
3.0 TDi V6 24V	D	2967	CAPA,CCWA/F	+▯	06/07 ▸	8K0260403E	•**814370**	678 341	AL
A5 CABRIOLET (2009>)									
2.0 TFSI	E	1984	CDNB,CDNC	+▯	03/09 ▸	8K0260403M	•**814370**	678 341	AL
3.2 FSI	E	3197	CALA	+▯	03/09 ▸	8K0260403M	•**814370**	678 341	AL
2.0 TDI	D	1968	CAHA/F,CAHB/F	+▯	05/09 ▸	8K0260403AB	•**814370**	678 341	AL
2.7 TDI	D	2698	CGKA/F,CGKB/F	+▯	03/09 ▸	8K0260403AB	•**814370**	678 341	AL
3.0 TDI	D	2967	CCWA/F	+▯	03/09 ▸	8K0260403AB	•**814370**	678 341	AL
A6 (97>2001)									
1.8 i 20V, 1.8 i Turbo 20V	E	1781	AEB, AFY, AJL, AJP, ANB APU, AQE, ARH, ARK, AWT		04/97 ▸ 05/01	4B0260403T	**817666**	618 421	AL
2.4 i V6	E	2393	AGA, AJG, ALF/W, AML/M APC/S/Z, ARJ, ARN		04/97 ▸ 05/01	4B0260403T	**817666**	618 421	AL
2.7 i V6 Bi turbo	E	2671	AJK, AZA		01/98 ▸ 05/01	4B0260403S	**817997**	578 421	AL
2.8 i V6 30V	E	2771	ACK, AGE, ALG, AMX, APR AQD, ATX		04/97 ▸ 05/01	4B0260403T	**817666**	618 421	AL
1.9 TDi ▸ 4B-2-010000	D	1896	AJM		04/97 ▸ 05/01	4B0260403S	**817997**	578 421	AL
1.9 TDi 4B-2-010001 ▸	D	1896	AFN, AVG		04/97 ▸ 05/01	4B0260403T	**817666**	618 421	AL
2.5 TDi V6	D	2496	AFB, AKE, AKN		04/97 ▸ 05/01	4B0260403AA	**817665**	598 391	AL
A6 (2001>2004)									
1.8 i Turbo 20V	E	1781	AWT		06/01 ▸	4B0260403T	**817666**	618 421	AL
2.0 i, 2.0 i 20V	E	1984	ALT		06/01 ▸	8E0260403B	**817569**	608 401	AL
2.4 i V6 30V	E	2393	AMM, ASM, BDV		06/01 ▸	4B0260403T	**817666**	618 421	AL
2.7 i V6 Bi Turbo	E	2671	ARE, BES		06/01 ▸	4B0260403S	**817997**	578 421	AL
3.0 i V6 30V	E	2976	ASN, BBJ		06/01 ▸	8E0260403B	**817569**	608 401	AL
1.9 TDi	D	1896	AVF, AWX		06/01 ▸	4B0260403T	**817666**	618 421	AL
2.5 TDi V6	D	2496	AKE, AYM, BAU, BDH, BFC		06/01 ▸	4B0260403AA	**817665**	598 391	AL
2.5 TDi V6	D	2496	BCZ, BDG		02/03 ▸	8E0260403D	**817741**	568 401	AL
A6 (2004>)									
2.0 TFSi 16V	E	1984	BPJ		06/05 ▸	4F0260403E	**814004**	658 401	AL
2.4 i V6 24V	E	2393	BDW		04/04 ▸	4F0260403E	**814004**	658 401	AL
2.8 FSi V6 24V	E	2773	BDX		11/06 ▸ 05/07	4F0260403E	**814004**	658 401	AL
3.0 V6 30V	E	2976	BBJ		04/04 ▸	4F0260403E	**814004**	658 401	AL
3.2 FSi V6 24V	E	3123	AUK		04/04 ▸	4F0260403E	**814004**	658 401	AL
4.2 FSi V8 32V	E	4163	BAT, BVJ		04/04 ▸	4F0260403E	**814004**	658 401	AL
2.0 TDi 16V	D	1968	BLB, BNA, BRE, BRF, BVG		07/04 ▸	4F0260403E	**814004**	658 401	AL
2.7 TDi V6 24V	D	2698	BPP, BSG		11/04 ▸	4F0260403E	**814004**	658 401	AL
3.0 TDi V6 24V	D	2967	ASB, BMK, BNG		04/04 ▸	4F0260403E	**814004**	658 401	AL
A6 ALLROAD									
2.7 i V6 Turbo	E	2671	BES		07/02 ▸	4B0260403S	**817997**	578 421	AL
4.2 i V8 40V	E	4172	BAS		09/02 ▸	8E0260403B	**817569**	608 401	AL
Q5									
2.0 TFSI 16V	E	1984	CDNC	+▯	11/08 ▸	8K0260403M	•**814370**	678 341	AL

Valeo recommends replacing the receiver drier with the condenser
Pensez à changer la bouteille déshydratante avec le condenseur
Denken Sie daran, beim Wechsel des Kondensators auch den Trockner zu erneuern
Piense en la sustitución del filtro deshidratante con el condensador
A Valeo recomenda substituir o filtro desidratante com o condensador
Ricordatevi di sostituire il filtro disidratatore insieme al condensatore
Bij de vervanging van de condensor, vervang tevens de filter-droger

Valeo zaleca wymianę filtra osuszacza wraz ze skraplaczem
Рекомендируем замену осушителя вместо с конденсором
Spolu s kondenzátorem je nutné vyměnit také vysoušeč
Nu uitați sa schimbați uscatorul cu condensatorul
Kondenser değişimlerinde nem alıcının da değiştirilmesi gerektiğini dikkate alınız
Πρέπει να αντικαταστήσετε το φίλτρο υγρού μαζί με το συμπυκνωτή

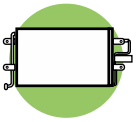

		CC				OE	Valeo	DIM	TECH
AUDI (.../...)									
Q5 (.../...)									
3.2 FSI V6 24V	E	3197	CALB	+⛽	11/08 ▸	8K0260403E	•**814370**	678 341	AL
2.0 TDI 16V	D	1968	CAHA/F,CAHB/F	+⛽	11/08 ▸	8K0260403M	•**814370**	678 341	AL
3.0 TDI V6 24V	D	2967	CCWA/F,CCWB/F	+⛽	11/08 ▸	8K0260403AB	•**814370**	678 341	AL
Q7									
3.6 FSi V6 24V	E	3597	BHK		08/06 ▸	4L0260401A	•**817838**	740 391	AL
4.2 FSi V8	E	4163	BAR		03/06 ▸ 06/09	4L0260401A	•**817838**	740 391	AL
3.0 TDI V6	D	2967	BUG,BUN,CASA/F,CASB/F CCMA/F		03/06 ▸	4L0260401A	•**817838**	740 391	AL
4.2 TDI V8 32V	D	4134	BTR/F		03/07 ▸ 06/09	4L0260401A	•**817838**	740 391	AL
RS4 QUATTRO									
2.7 i V6 Bi Turbo 30V	E	2671	ASJ		06/00 ▸ 10/00	8D0260403G	**817840**	578 421	AL
2.8 i V6 Bi Turbo 30V	E	2771	AZR		11/00 ▸ 09/01	8D0260403G	**817840**	578 421	AL
S3 (96>2003)									
1.8 i Turbo 20V	E	1781	AMK, APY		11/98 ▸ 04/02	1J0820413N	**817244**	548 361	AL
S3 (2006>)									
2.0 TFSi 16V	E	1984	BHZ, BZC	+⛽/ R134	10/06 ▸	1K0820411P	**817777**	584 401	AL
S4 (97>2001)									
2.7 i V6 30V	E	2671	AGB, APB		10/97 ▸ 09/01	8D0260403G	**817840**	578 421	AL
S4 (2003>2008)									
4.2 i V8 40V	E	4163	BBK		03/03 ▸	8E0260403R	**818190**	608 381	AL
S4 (2008>)									
3.0 TFSI V6 24V	E	2995	CAKA	+⛽	11/08 ▸	8K0260403M	•**814370**	678 341	AL
S4 CABRIOLET (2004>)									
4.2 i V8 40V	E	4163	BBK		02/04 ▸	8E0260403R	**818190**	608 381	AL
S5 (2007>2012)									
4.2 FSi V8 32V	E	4163	CAUA	+⛽	06/07 ▸	8K0260403E	•**814370**	678 341	AL
S5 CABRIOLET (2009>2012)									
3.0 TFSI	E	2995	CAKA	+⛽	06/09 ▸	8K0260403AB	•**814370**	678 341	AL
TT (98>2006)									
1.8 i Turbo 20V ▸ 8N-3-050000	E	1781	AJQ, APP, APX, ARY, AUM AUQ, BAM		10/98 ▸	1J0820413N	**817244**	548 361	AL
3.2 i V6 ▸ 8N-3-050000	E	3189	BHE		07/03 ▸ 07/04	1J0820413N	**817244**	548 361	AL
TT (2006>)									
2.0 TFSi 16V	E	1984	BWA, CDL	+⛽/ R134	08/06 ▸	1K0820411P	**817777**	584 401	AL
3.2 i V6 24V	E	3189	BUB	+⛽/ R134	08/06 ▸	1K0820411P	**817777**	584 401	AL
BMW									
1 SERIES E81									
116i	E	1597	N43B16A		09/07 ▸	64509169772	**814011**	628 401	AL
120i	E	1995	N43B/2000/20U0		01/07 ▸	64509169772	**814011**	628 401	AL
130i	E	2979	N54B3000		03/08 ▸	64509169791	**814011**	628 401	AL
130i	E	2996	N52B/3001/30U1		01/07 ▸	64509169791	**814011**	628 401	AL
1 SERIES E87									
116i	E	1596	N45B16		09/04 ▸	64536930038	**814011**	628 401	AL

• **New** Nouveau **Neu** Nuevo **Novo** Nuovo **Nieuw** Nowi **Новый** Novy **Nou** Yeni **Νέους**

⏭ **Multi-product Crosslist on section 1** Cross List Multi-produits, Section 1
Crossliste siehe Kapitel 1 Crosslist Multiproducto en la sección 1
Lista Multi-produto na secção 1 Cross-list Multi prodotto nella sezione 1
Rubriek 1 : Cross list "alle produkten" Kombinovaný převodník v sekci 1
Crosslist multi-produse, secţie 1 **Çoklu ürün çapraz listesi bölüm 1 tedir**
Αντιστοιχίες προϊόντων στο κεφάλαιο 1

		CC				OE	Valeo	DIM	TECH
BMW (.../...)									
1 SERIES E87 (.../...)									
118i, 120i	E	1995	N46B/20O1/20U1		09/04 ▸ 02/07	64509169791	**814011**	628 401	AL
130i	E	2996	N52B30A		07/05 ▸ 02/07	64509169791	**814011**	628 401	AL
118d, 120d	D	1995	M47D/20TU2/20U2		09/04 ▸	64539169526	**814012**	628 341	AL
1 SERIES E87 LCI									
118i	E	1995	N43B/20U0/20O0		03/07 ▸	64509169772	**814011**	628 401	AL
130i	E	2996	N52B30O1		03/07 ▸	64509169791	**814011**	628 401	AL
1 SERIES F20 (2011>)									
114i, 116i, 118i, 125i	E		N13B16U0, N13B16M0	+/ R134	10/11 ▸	64509218121	**814189**	605 348	AL
125i	E		N20 /2,0l I 4 CYL TURBO		10/11 ▸	64539218123	**814191**	605 399	AL
116d, 118d, 120d, 125d	D		N47D20K1, N47D20U1 N47D20O1	+/ R134	10/11 ▸	64509218121	**814189**	605 348	AL
1.6 i 16V	E	1598	N13B/16M0/16A	+/ R134	07/11 ▸	64509218121	**814189**	605 348	AL
120i	E	1997	N20B20A	+/ R134	03/12 ▸	64509218121	**814189**	605 348	AL
1.6 d 16V	D	1598	N47D16	+/ R134	11/11 ▸	64509218121	**814189**	605 348	AL
3 SERIES E46									
316i, 316ti	E	1796	N42B/18WT/18		05/01 ▸	64538377614	**817383**	565 421	AL
316i, 318Ci, 318i	E	1895	M43B19-E46		03/98 ▸	64538377614	**817383**	565 421	AL
320Ci, 320i	E	1991	M52B20-EU3		03/98 ▸ 09/01	64538377614	**817383**	565 421	AL
318Ci, 318i, 318ti	E	1995	M43B20, N42B/20WT/20		09/01 ▸	64538377614	**817383**	565 421	AL
320Ci, 320i	E	2171	M54B22		07/00 ▸	64538377614	**817383**	565 421	AL
323Ci, 323i, 325Ci, 325i, 325ti 325xi	E	2494	M52B25-EU3 M54B/25/25-EU4		03/98 ▸	64538377614	**817383**	565 421	AL
328Ci, 328i	E	2793	M52B28-EU3		03/98 ▸ 12/00	64538377614	**817383**	565 421	AL
330Ci, 330i, 330xi	E	2979	M54B/30-231/30		01/99 ▸	64538377614	**817383**	565 421	AL
318d, 320d	D	1951	M47D/20UL/20		03/98 ▸	64538377648	**817405**	518 311	AL
318d, 320Cd, 320d	D	1995	M47D/20TU/20TUUL		09/01 ▸	64538377648	**817405**	518 311	AL
330d, 330xd	D	2926	M57D30-183		09/99 ▸	64538377648	**817405**	518 311	AL
330Cd, 330d, 330xd	D	2993	M57D/30TU/30-204		09/01 ▸	64538377648	**817405**	518 311	AL
3 SERIES E90									
316i	E	1596	N45B16		03/05 ▸ 01/07	64509169772	**814011**	628 401	AL
316i	E	1597	N43B16A		02/07 ▸	64509169791	**814011**	628 401	AL
316i	E	1796	N42B18WT		02/06 ▸	64536930040	**814011**	628 401	AL
318i,320i	E	1995	N43B/20U0/20O0 N46B/20O1/20U1		03/05 ▸	64509169791	**814011**	628 401	AL
320si	E	1997	N45B20A		02/06 ▸	64509169772	**814011**	628 401	AL
325i,325xi	E	2497	N52B25O0		03/05 ▸	64509169791	**814011**	628 401	AL
335i, 335xi	E	2979	N54B30O0		06/06 ▸	64539169526	**814012**	628 341	AL
325i,325xi,330i,330xi	E	2996	N52B/30O0, N52B30A N53B/30U0/30O0		03/05 ▸	64509169791	**814011**	628 401	AL
318d, 320d	D	1995	M47D20TU2/U2 N47D20O0/U0,		03/05 ▸	64539169526	**814012**	628 341	AL
325d, 330d, 330xd, 335d	D	2993	M57D30O2/T2/U2		09/05 ▸	64539169526	**814012**	628 341	AL
3 SERIES (F30/F31)									
316i	E	1597	N20B20U0	+/ R134	10/11 ▸	64509218121	**814189**	605 348	AL
320i	E	1951	N20B20O0	+/ R134	10/11 ▸	64509218121	**814189**	605 348	AL
328i	E	2793	N55B30	+/ R134	10/11 ▸	64509218121	**814189**	605 348	AL
335i	E	2979	N55B30O0	+/ R134	10/11 ▸	64509218121	**814189**	605 348	AL
320ih, 335ih	E	1951	B48B20M0, B48B20O0 B48B20O0, N57D30T1		02/12 ▸	64539218122	**814190**	605 348	AL
320i, 328i	E	1951	N20		10/11 ▸	64539218123	**814191**	605 399	AL
316d, 318d, 320d, 325d, 330d	D		N47D20O1, N47D20O1 N47D20T1, N57D30O1	+/ R134	10/11 ▸	64509218121	**814189**	605 348	AL
335d	D	2979	2,0l I 4 CYL TURBO		10/11 ▸	64539218123	**814191**	605 399	AL
5 SERIES E39									
520i	E	1991	M52B20		07/94 ▸ 09/97	64538391647	**817248**	458 421	AL

Valeo recommends replacing the receiver drier with the condenser
Pensez à changer la bouteille déshydratante avec le condenseur
Denken Sie daran, beim Wechsel des Kondensators auch den Trockner zu erneuern
Piense en la sustitución del filtro deshidratante con el condensador
A Valeo recomenda substituir o filtro desidratante com o condensador
Ricordatevi di sostituire il filtro disidratatore insieme al condensatore
Bij de vervanging van de condensor, vervang tevens de filter-droger
Valeo zaleca wymianę filtra osuszacza wraz ze skraplaczem
Рекомендируем замену осушителя вместо с конденсором
Spolu s kondenzátorem je nutné vyměnit také vysoušeč
Nu uitați sa schimbați uscatorul cu condensatorul
Kondenser değişimlerinde nem alıcının da değiştirilmesi gerektiğini dikkate alınız
Πρέπει να αντικαταστήσετε το φίλτρο υγρού μαζί με το συμπυκνωτή

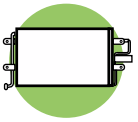

		CC				OE	Valeo	DIM	TECH
BMW (.../...)									
5 SERIES E39 (.../...)									
520i	E	1991	M52B/20/20-EU3		10/97 ▸ 04/04	64538378438	**817607**	458 421	AL
520i	E	2171	M54B22		07/00 ▸ 04/04	64538378438	**817607**	458 421	AL
523i	E	2494	M52B25		07/94 ▸ 09/97	64538391647	**817248**	458 421	AL
523i, 525i	E	2494	M52B/25/25-EU3, M54B/25		10/97 ▸ 04/04	64538378438	**817607**	458 421	AL
528i	E	2793	M52B28		07/94 ▸ 09/97	64538391647	**817248**	458 421	AL
528i	E	2793	M52B/28/28-EU3		10/97 ▸ 04/04	64538378438	**817607**	458 421	AL
530i	E	2979	M54B30-231		07/00 ▸ 04/04	64538378438	**817607**	458 421	AL
535i	E	3498	M62B35		07/94 ▸ 09/97	64538391647	**817248**	458 421	AL
535i	E	3498	M62B/35/35-245		10/97 ▸ 04/03	64538378438	**817607**	458 421	AL
540i	E	4398	M62B44		07/94 ▸ 09/97	64538391647	**817248**	458 421	AL
540i	E	4398	M62B/44/44-285		10/97 ▸ 04/04	64538378438	**817607**	458 421	AL
520d	D	1951	M47D20		01/00 ▸ 05/02	64538375513	**817561**	588 321	AL
520d	D	1995	M47D20TU		06/02 ▸ 04/04	64538375513	**817561**	588 321	AL
525Td, 525Tds	D	2497	M51D25		07/94 ▸ 09/97	64538391647	**817248**	458 421	AL
525Td, 525Tds	D	2497	M51D25		10/97 ▸ 04/04	64538378438	**817607**	458 421	AL
525d	D	2497	M57D25		01/00 ▸ 04/04	64538375513	**817561**	588 321	AL
530d	D	2926	M57D/30-183/30-193		09/98 ▸ 04/04	64538375513	**817561**	588 321	AL
5 SERIES E60									
520i	E	2171	M54B22	+Ⓥ R134	05/03 ▸	64509122825	**817850**	588 421	AL
525i	E	2494	M54B25-EU4	+Ⓥ R134	09/03 ▸ 02/05	64509122825	**817850**	588 421	AL
523i, 525i	E	2497	N52B25UL, M54B/25-EU4 N52B/250L	+Ⓥ R134	09/03 ▸	64509122825	**817850**	588 421	AL
530i	E	2979	M54B30-231	+Ⓥ R134	05/03 ▸	64509122825	**817850**	588 421	AL
530i	E	2996	N52B30B	+Ⓥ R134	03/05 ▸	64509122825	**817850**	588 421	AL
540i	E	4000	N62B40TU	+Ⓥ R134	09/05 ▸	64509122825	**817850**	588 421	AL
545i	E	4398	N62B44VVT	+Ⓥ R134	05/03 ▸ 09/05	64509122825	**817850**	588 421	AL
550i	E	4799	N62B48TU	+Ⓥ R134	09/05 ▸	64509122825	**817850**	588 421	AL
520d	D	1995	M47D20TU2	+Ⓥ R134	09/05 ▸	64509122827	**817851**	608 381	AL
525d	D	2497	M57D25TU	+Ⓥ R134	05/03 ▸	64509122827	**817851**	608 381	AL
530d, 530xd, 535d	D	2993	M57D/30TU/30TU2	+Ⓥ R134	05/03 ▸	64509122827	**817851**	608 381	AL
5 SERIES (F10/F11/F18)									
520i	E	2000	N20		09/11 ▸	64537618770	**814192**	595 479	AL
6 SERIES E63/E64 (2003>2007)									
630i	E	2996	N52B30	+Ⓥ R134	09/04 ▸ 08/07	64509122825	**817850**	588 421	AL
645Ci	E	4398	N62B44VVT	+Ⓥ R134	09/03 ▸ 08/07	64509122825	**817850**	588 421	AL
650i	E	4799	N62B48TU	+Ⓥ R134	03/05 ▸ 08/07	64509122825	**817850**	588 421	AL
6 SERIES E63/E64 (2007>)									
3.0 i 24V	E	2996	N53B3000	+Ⓥ R134	09/07 ▸	64509122825	**817850**	588 421	AL
4.8 i V8 32V	E	4799	N62B4801	+Ⓥ R134	09/07 ▸	64509122825	**817850**	588 421	AL
3.0 24V	D	2993	M57D30T2	+Ⓥ R134	09/07 ▸	64509122825	**817850**	588 421	AL
7 SERIES E38									
728i	E	2793	M52B28		07/95 ▸ 09/97	64538373924	**816922**	458 421	AL
728i	E	2793	M52B/28-EU3/28		09/97 ▸ 08/01	64538378439	**817406**	499 421	AL
730i	E	2997	M60B30		06/94 ▸ 09/97	64538373924	**816922**	458 421	AL
730i	E	2997	M60B30		09/97 ▸ 08/01	64538378439	**817406**	499 421	AL
735i	E	3498	M62B35		04/96 ▸ 09/97	64538373924	**816922**	458 421	AL
735i	E	3498	M62B35		09/97 ▸ 08/01	64538378439	**817406**	499 421	AL
740i	E	3982	M60B40		06/94 ▸ 03/96	64538373924	**816922**	458 421	AL
740i	E	4398	M62B44		04/96 ▸ 09/97	64538373924	**816922**	458 421	AL
740i	E	4398	M62B44		09/97 ▸ 08/01	64538378439	**817406**	499 421	AL
750i	E	5379	M73B54		06/94 ▸ 09/97	64538373924	**816922**	458 421	AL
750i	E	5379	M73B54		09/97 ▸ 08/01	64538378439	**817406**	499 421	AL
725Tds	D	2497	M51D25		04/96 ▸ 09/97	64538373924	**816922**	458 421	AL
725Tds	D	2497	M51D25		09/97 ▸ 08/01	64538378439	**817406**	499 421	AL

• **New** Nouveau **Neu** Nuevo **Novo** Nuovo **Nieuw** Nowi **Новый** Novy **Nou** Yeni **Νέους**

⏭ **Multi-product Crosslist on section 1** Cross List Multi-produits, Section 1
Crossliste siehe Kapitel 1 Crosslist Multiproducto en la sección 1
Lista Multi-produto na secção 1 Cross-list Multi prodotto nella sezione 1
Rubriek 1 : Cross list "alle produkten" Kombinovaný převodník v sekci 1
Crosslist multi-produse, secţie 1 **Çoklu ürün çapraz listesi bölüm 1 tedir**
Αντιστοιχίες προϊόντων στο κεφάλαιο 1

		CC				OE	Valeo	DIM	TECH
BMW (.../...)									
7 SERIES E38 (.../...)									
730d	D	2926	M57D30-183		09/98 ▸ 08/01	64538375513	**817561**	588 321	AL
740d	D	3901	M67D40		03/99 ▸ 08/01	64538375513	**817561**	588 321	AL
7 SERIES E65/E66									
730i, 730Li	E	2979	M54B30	R134	09/03 ▸ 02/05	64509122825	**817850**	588 421	AL
735i, 735Li	E	3600	N62B36VVT	R134	09/01 ▸ 02/05	64509122825	**817850**	588 421	AL
740i, 740Li	E	4000	N62B40TU	R134	03/05 ▸	64509122825	**817850**	588 421	AL
745i, 745Li	E	4398	N62B44VVT	R134	09/01 ▸ 02/05	64509122825	**817850**	588 421	AL
750i, 750Li	E	4799	N62B48TU	R134	03/05 ▸	64509122825	**817850**	588 421	AL
760i, 760Li	E	5972	N73B60A	R134	02/03 ▸ 02/05	64509122825	**817850**	588 421	AL
730d, 730Ld	D	2993	M57D30TU	R134	09/02 ▸	64509122827	**817851**	608 381	AL
740d	D	3901	M67D40	R134	09/02 ▸ 02/05	64509122827	**817851**	608 381	AL
745d	D	4423	M67D44	R134	03/05 ▸	64509122827	**817851**	608 381	AL
8 SERIES E31									
840	E	3982	M60B40		12/92 ▸ 07/96	64531392941	**816981**	572 447	AL
840	E	4398	M62B44		03/96 ▸ 01/00	64531392941	**816981**	572 447	AL
850	E	4988	M70B50		09/89 ▸ 08/94	64531392941	**816981**	572 447	AL
850	E	5379	M73B54		09/94 ▸ 01/00	64531392941	**816981**	572 447	AL
850	E	5576	S70B56		09/92 ▸ 07/96	64531392941	**816981**	572 447	AL
M3 E46									
3.2 i	E	3246	S54B32		07/00 ▸	64538377614	**817383**	565 421	AL
M3 E90									
4.0 i V8 32V	E	3999	S65B40A		09/08 ▸ 04/10	64539206297	**814011**	628 401	AL
M5 E39									
5.0 i	E	4941	S62B50		07/99 ▸	64538378438	**817607**	458 421	AL
M5 E61 LCI									
5.0 i V10 40V	E	4999	S85B50		01/07 ▸ 09/11	64509122825	**817850**	588 421	AL
M6									
5.0 i 40V	E	4999	S85B50	R134	03/05 ▸	64509122825	**817850**	588 421	AL
X1 (2009>)									
2.0 i 16V	E	1995	N46B20B		04/10 ▸	64539206297	**814011**	628 401	AL
3.0 i 24V	E	2996	N52B30A		04/10 ▸	64539206297	**814011**	628 401	AL
2.0 d 16V	D	1995	N47D/20C/20D/20A		10/09 ▸ 04/10	64539229021	**814012**	628 341	AL
X3 (2003>)									
2.0 i 16V	E	1995	N46B20O1		09/05 ▸	17113400400	**817383**	565 421	AL
2.5 i 24V	E	2494	M54B25-6S5		03/04 ▸	17113400400	**817383**	565 421	AL
3.0 i 24V	E	2979	M54B30-231		10/03 ▸	17113400400	**817383**	565 421	AL
2.0 d	D	1995	M47D20TU		09/04 ▸	64538377648	**817405**	518 311	AL
3.0 d	D	2993	M57D30-204		10/03 ▸ 09/05	64538377648	**817405**	518 311	AL
X3 E83 LCI (2006>)									
2.0 i	E	1995	N46B20B		08/06 ▸	17113400400	**817383**	565 421	AL
2.5 si 24V	E	2497	N52B25A		08/06 ▸	17113400400	**817383**	565 421	AL
3.0 si	E	2996	N52B30A		08/06 ▸	17113400400	**817383**	565 421	AL
X5 E53 (2000>2006)									
3.0 i	E	2979	M54B30-231	R134	01/00 ▸ 11/06	64536914216	**817575**	498 391	AL
4.4 i	E	4398	M62B44, N62B44	R134	01/00 ▸ 11/06	64536914216	**817575**	498 391	AL
4.6 is	E	4619	M62B46	R134	09/01 ▸ 11/06	64536914216	**817575**	498 391	AL
4.8 is	E	4799	N62B48A	R134	03/04 ▸ 11/06	64536914216	**817575**	498 391	AL

Valeo recommends replacing the receiver drier with the condenser
Pensez à changer la bouteille déshydratante avec le condenseur
Denken Sie daran, beim Wechsel des Kondensators auch den Trockner zu erneuern
Piense en la sustitución del filtro deshidratante con el condensador
A Valeo recomenda substituir o filtro desidratante com o condensador
Ricordatevi di sostituire il filtro disidratatore insieme al condensatore
Bij de vervanging van de condensor, vervang tevens de filter-droger

Valeo zaleca wymianę filtra osuszacza wraz ze skraplaczem
Рекомендируем замену осушителя вместо с конденсором
Spolu s kondenzátorem je nutné vyměnit také vysoušeč
Nu uitați sa schimbați uscatorul cu condensatorul
Kondenser değişimlerinde nem alıcının da değiştirilmesi gerektiğini dikkate alınız
Πρέπει να αντικαταστήσετε το φίλτρο υγρού μαζί με το συμπυκνωτή

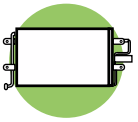

		CC				OE	Valeo	DIM	TECH
BMW (.../...)									
X5 E53 (2000>2006) (.../...)									
3.0 d	D	2926	M54D30	R134	03/01 ▸ 08/03	64536914216	**817575**	498 391	AL
3.0 d	D	2993	M57D30TU	R134	08/03 ▸ 11/06	64536914216	**817575**	498 391	AL
X5 E70 (12/2006>)									
3.0 si 24V	E	2996	N52B30A		12/06 ▸	64509239992	**•814367**	628 461	AL
4.8 si V8 32V	E	4799	N62B48B		01/07 ▸	64509239992	**•814367**	628 461	AL
3.0 d 24V,3.0 sd 24V	D	2993	M57D/30O2/30T2		12/06 ▸	64536972553	**•814367**	628 461	AL
X5 LCI E70 (2010>)									
3.0 i 24V	E	2979	N55B30A		03/10 ▸	64509239992	**•814367**	628 461	AL
4.4 i V8 32V	E	4395	N63B44A		03/10 ▸	64509239992	**•814367**	628 461	AL
3.0 d 24V	D	2993	N57D/30B/30A		03/10 ▸	64509239992	**•814367**	628 461	AL
X6 E71									
3.0 i 24V	E	2979	N54B30O0,N55B30A		05/08 ▸	64536972553	**•814367**	628 461	AL
4.4 i V8 32V	E	4395	N63B44A		05/08 ▸	64536972553	**•814367**	628 461	AL
3.0 d 24V	D	2993	M57D/30T2,M57N/2 N57D/30B/30A		05/08 ▸	64509239992	**•814367**	628 461	AL
Z4 (2002>2009)									
2.0 i 16V	E	1995	N46B20O1		03/05 ▸ 08/08	64536914033	**814287**	525 408	AL
2.2 i 24V	E	2171	M54B22		03/04 ▸ 01/06	64536914033	**814287**	525 408	AL
2.5 i 24V	E	2494	M54B25-6S5		09/02 ▸ 01/06	64536914033	**814287**	525 408	AL
2.5 i 24V,2.5 si 24V	E	2497	N52B/25A/25B		02/06 ▸ 03/09	64536914033	**814287**	525 408	AL
3.0 i 24V	E	2979	M54B30		09/02 ▸ 01/06	64536914033	**814287**	525 408	AL
3.0 si 24V	E	2996	N52B30A		02/06 ▸ 03/09	64536914033	**814287**	525 408	AL
3.2 i 24V	E	3246	S54B32		02/06 ▸ 03/09	64536914033	**814287**	525 408	AL
Z4 (2009>)									
3.0 i 24V	E	2979	N54B30A		03/09 ▸	64539229021	**814012**	628 341	AL
Z8									
5.0 i V8	E	4941	S62B50		03/00 ▸	64538378438	**817607**	458 421	AL
CHEVROLET									
MATIZ									
0.8 i	E	796	F8CV	R134	01/05 ▸ 02/11	96591582	**•814358**	494 303	AL
1.0 i	E	995	B10S	R134	01/05 ▸ 02/11	96591582	**•814358**	494 303	AL
CHRYSLER									
300M									
2.7 i V6 24V	E	2736	EER, EES		01/98 ▸ 04/03	4758305	**817075**	692 358	AL
3.5 i V6 24V	E	3518	EGC, EGG		01/98 ▸ 04/03	4758305	**817075**	692 358	AL
GRAND VOYAGER (91>96)									
3.3 i	E	3301	EGA	R12>R134a	04/92 ▸ 10/95	4644365	**817015**	676 352	AL
GRAND VOYAGER (2001>2004)									
2.4 i 16V	E	2429	EDZ	N	03/01 ▸ 07/04	4809267AC	**817477**	747 438	AL
3.3 i V6	E	3301	EGA	N	03/01 ▸	4809227AD	**817477**	747 438	AL
3.3 i V6	E	3301	EGA	Rear Condenser	03/01 ▸	4682591	**817074**	685 128	AL
2.5 CRD	D	2500	ENC		03/01 ▸	5072262AA	**817582**	744 437	AL
GRAND VOYAGER (2004>)									
2.8 CRD	D	2776	ENR		07/04 ▸	5142490AA	**817739**	744 437	AL
PT CRUISER									
2.0 i 16V	E	1996	ECC	N	09/00 ▸	5017405	**817445**	544 348	AL

• **New** Nouveau **Neu** Nuevo **Novo** Nuovo **Nieuw** Nowi **Новый** Novy **Nou** Yeni **Νέους**

⏭ **Multi-product Crosslist on section 1** Cross List Multi-produits, Section 1
Crossliste siehe Kapitel 1 Crosslist Multiproducto en la sección 1
Lista Multi-produto na secção 1 Cross-list Multi prodotto nella sezione 1
Rubriek 1 : Cross list "alle produkten" Kombinovaný převodník v sekci 1
Crosslist multi-produse, secţie 1 **Çoklu ürün çapraz listesi bölüm 1 tedir**
Αντιστοιχίες προϊόντων στο κεφάλαιο 1

		CC				OE	Valeo	DIM	TECH
CHRYSLER (.../...)									
PT CRUISER (.../...)									
2.4 i 16V	E	2429	EDZ	N	06/00 ▸	5017405	**817445**	544 348	AL
SEBRING									
2.0 i 16V	E	1996	ECC		03/00 ▸	5017621	**817475**	674 392	AL
2.7 i V6 24V	E	2736	EES		03/00 ▸	5017621	**817475**	674 392	AL
STRATUS									
2.0 i	E	1996	ECB		07/96 ▸	5011395AA	**816991**	660 380	AL
2.4 i	E	2429	EDZ		07/96 ▸	5011395AA	**816991**	660 380	AL
2.5 i V6	E	2497	EEB		07/96 ▸	5011395AA	**816991**	660 380	AL
VOYAGER (83>95)									
2.5 i, 2.5 24V	E	2501	EDM	R12>R134a	10/83 ▸ 02/91	4644365	**817015**	676 352	AL
3.0	E	2972	EFA	R12>R134a	01/89 ▸ 02/91	4644365	**817015**	676 352	AL
3.3 i	E	3301	EGA	R12>R134a	04/92 ▸ 10/95	4644365	**817015**	676 352	AL
VOYAGER (96>2001)									
2.0 i	E	1996	ECB		10/96 ▸ 03/01	4662589	**817073**	686 457	AL
3.3 i	E	3301	EGA		10/96 ▸ 03/01	4662589	**817073**	686 457	AL
3.8 i	E	3778	EGH		10/96 ▸ 03/01	4662589	**817073**	686 457	AL
VOYAGER (2001>2004)									
2.4 i 16V	E	2429	EDZ	N	03/01 ▸ 04/04	4809267AC	**817477**	747 438	AL
3.3 i V6	E	3301	EGA	Rear Condenser	03/01 ▸	4682591	**817074**	685 128	AL
3.3 i V6	E	3301	EGA	N	03/01 ▸ 04/04	4809227AD	**817477**	747 438	AL
2.5 CRD	D	2500	ENC		03/01 ▸	5072262AA	**817582**	744 437	AL
VOYAGER (2004>)									
2.8 CRD	D	2776	ENR		07/04 ▸	5142490AA	**817739**	744 437	AL
VOYAGER (96>2001)									
2.0 i 16V	E	1996	ECB	N	10/96 ▸ 03/01	4809267AC	**817477**	747 438	AL
2.0 i 16V	E	1996	ECB		01/97 ▸ 12/99	4809129AA	**814290**	710 388	AL
2.4 i 16V	E	2459	EDZ		01/97 ▸ 12/99	4809129AA	**814290**	710 388	AL
2.4 i 16V	E	2459	EDZ	N	01/96 ▸ 03/01	4809267AC	**817477**	747 438	AL
3.3 i V6	E	3301	EGA		01/96 ▸ 12/99	4809129AA	**814290**	710 388	AL
3.8 i V6	E	3778	EGH,EGH-164		10/96 ▸ 03/01	4809129AA	**814290**	710 388	AL
CITROËN									
C1									
1.0 i 12V	E	998	384F(CFA)	+/ R134	06/05 ▸	6455EF	**818013**	359 351	AL
1.4 HDi	D	1398	DV4TD	+/ R134	06/05 ▸	6455EE	**818014**	359 351	AL
C2									
1.1 i	E	1124	TU1JP	+/ R134	09/03 ▸	6455ET	**814095**	464 371	AL
1.4 i	E	1360	TU3JP	+/ R134	09/03 ▸	6455ET	**814095**	464 371	AL
1.6 i 16V	E	1587	TU5JP4, TU5JP4S	+/ R134	09/03 ▸	6455ET	**814095**	464 371	AL
1.4 HDi	D	1398	DV4TD	+/ R134	09/03 ▸	6455ET	**814095**	464 371	AL
1.6 HDi 16V ▸ 10800	D	1560	DV6TED4	+	11/05 ▸ 01/10	6455HA	**814095**	464 371	AL
C3 (2002>2005)									
1.1 i	E	1124	TU1JP	+/ R134	04/02 ▸ 10/05	6455ET	**814095**	464 371	AL
1.4 i, 1.4 i 16V	E	1360	ET3J4, TU3JP	+/ R134	04/02 ▸ 10/05	6455ET	**814095**	464 371	AL
1.6 i 16V	E	1587	TU5JP4	+/ R134	04/02 ▸	6455ET	**814095**	464 371	AL
1.4 HDi 16V	D	1398	DV4TED4	+/ R134	04/02 ▸ 10/05	6455ET	**814095**	464 371	AL
1.4 HDi ▸ 10163	D	1399	DV4TD	+/ R134	04/02 ▸ 10/05	6455ET	**814095**	464 371	AL

Valeo recommends replacing the receiver drier with the condenser
Pensez à changer la bouteille déshydratante avec le condenseur
Denken Sie daran, beim Wechsel des Kondensators auch den Trockner zu erneuern
Piense en la sustitución del filtro deshidratante con el condensador
A Valeo recomenda substituir o filtro desidratante com o condensador
Ricordatevi di sostituire il filtro disidratatore insieme al condensatore
Bij de vervanging van de condensor, vervang tevens de filter-droger
Valeo zaleca wymianę filtra osuszacza wraz ze skraplaczem
Рекомендируем замену осушителя вместо с конденсором
Spolu s kondenzátorem je nutné vyměnit také vysoušeč
Nu uitați sa schimbați uscatorul cu condensatorul
Kondenser değişimlerinde nem alıcının da değiştirilmesi gerektiğini dikkate alınız
Πρέπει να αντικαταστήσετε το φίλτρο υγρού μαζί με το συμπυκνωτή

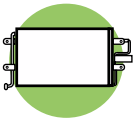

		CC				OE	Valeo	DIM	TECH
							CITROËN	(.../...)	
C3 (2002>2005) (.../...)									
1.6 HDi 16V	D	1560	DV6ATED4	R134	06/05 ▸ 10/05	6455EK	**818015**	524 368	AL
C3 (2005>)									
1.1 i	E	1124	TU1A	R134	11/05 ▸	6455ET	**814095**	464 371	AL
1.4 i, 1.4 i 16V	E	1360	TU3JP, ET3J4, TU3A	R134	11/05 ▸	6455ET	**814095**	464 371	AL
1.6 i 16V	E	1587	TU5JP4	R134	12/06 ▸ 08/08	6455EK	**818015**	524 368	AL
1.4 HDi	D	1398	DV4TD	R134	11/05 ▸	6455ET	**814095**	464 371	AL
1.6 HDi 16V	D	1560	DV6ATED4, DV6TED4	R134	11/05 ▸	6455EK	**818015**	524 368	AL
C3 (2009>)									
1.1 i	E	1124	TU1AE5		03/10 ▸	6455JF	**814095**	464 371	AL
1.4 i GPL	F	1360	TU3AE5		10/10 ▸	6455JF	**814095**	464 371	AL
1.4 i	E	1360	TU3AE5		10/09 ▸	6455JF	**814095**	464 371	AL
1.4 VTi 95 16V	E	1397	EP3C		10/09 ▸	6455HA	**814095**	464 371	AL
1.6 i 16V	E	1587	TU5JP4	R134	10/09 ▸	6455EK	**818015**	524 368	AL
1.6 VTi 120 16V	E	1598	EP6C		10/09 ▸	6455HA	**814095**	464 371	AL
1.6 VTi 120 16V	E	1598	EP6C		03/10 ▸	6455HF	**818015**	524 368	AL
1.4 HDi 68,1.4 HDi 70	D	1398	DV4C,DV4TD		10/09 ▸	6455JF	**814095**	464 371	AL
1.6 HDi 16V	D	1560	DV6ATED4, DV6TED4	R134	10/09 ▸	6455EK	**818015**	524 368	AL
C3 PICASSO (2009>)									
1.4 VTi 95 16V	E	1397	EP3,EP3C		02/09 ▸	6455HF	**818015**	524 368	AL
1.6 VTi 120 16V	E	1598	EP6,EP6C		02/09 ▸	6455HF	**818015**	524 368	AL
1.6 HDi 110 16V,1.6 HDi 112 **1.6 HDi 90,1.6 HDi 90 16V** **1.6 e-HDi 90**	D	1560	DV6ATED4,DV6C,DV6DTED DV6TED4		02/09 ▸	6455HF	**818015**	524 368	AL
C3 PLURIEL									
1.4 i ▸ 10163	E	1360	TU3JP	R134	05/03 ▸	6455ET	**814095**	464 371	AL
1.6 i 16V	E	1587	TU5JP4	R134	05/03 ▸	6455ET	**814095**	464 371	AL
1.4 HDi ▸ 10163	D	1399	DV4TD	R134	02/04 ▸	6455ET	**814095**	464 371	AL
C4 (2004>)									
1.4 i 16V	E	1360	ET3J4	R134	11/04 ▸	6455GK	**818170**	568 361	AL
1.6 i 16V	E	1587	TU5JP4	R134	11/04 ▸	6455GK	**818170**	568 361	AL
1.6 THP 16V,1.6 VTi 16V	E	1598	EP6,EP6DT		07/08 ▸ 06/10	6455GK	**818170**	361 568	AL
1.6 THP 16V,1.6 VTi 16V	E	1598	EP6,EP6DT		07/08 ▸	6455GH	**818171**	568 361	AL
2.0 i 16V	E	1997	EW10A, EW10J4S	R134	11/04 ▸	6455CX	**818171**	568 361	AL
2.0 i 16V	E	1997	EW10J4	R134	11/04 ▸	6455GK	**818170**	568 361	AL
1.6 HDi 16V	D	1560	DV6ATED4, DV6TED4	R134	11/04 ▸	6455CX	**818171**	568 361	AL
2.0 HDi 16V	D	1997	DW10BTED4	R134	11/04 ▸	6455CX	**818171**	568 361	AL
C4 (2010>)									
1.4 VTi 95 16V	E	1397	EP3C		01/11 ▸	6455GH	**818171**	568 361	AL
1.6 THP 16V,1.6 VTi 16V	E	1598	EP6C,EP6CDT		09/10 ▸	6455GH	**818171**	568 361	AL
C4 AIRCROSS									
1.6 i 115 16V	E	1590	4A92		03/12 ▸	6455HP	**814315**	616 407	AL
1.6 HDi 115 16V	D	1560	DV6C		03/12 ▸	6455HP	**814315**	616 407	AL
1.8 HDi 150 16V	D	1798	4N13		03/12 ▸	6455HP	**814315**	616 407	AL
C4 PICASSO (2006>)									
1.6 Vti 16V,1.6 i THP 16V	E	1598	EP6,EP6C,EP6CDT,EP6DT		06/08 ▸	6455GH	**818171**	568 361	AL
1.8 i 16V ▸ 11381	E	1749	EW7A	R134	09/06 ▸ 01/08	6455EW	**818170**	535 361	AL
1.8 i 16V 11381 ▸	E	1749	EW7A	R134	02/08 ▸	6455GH	**818171**	568 361	AL

• **New** Nouveau **Neu** Nuevo **Novo** Nuovo **Nieuw** Nowi **Новый** Novy **Nou** Yeni **Νέους**

⏭ **Multi-product Crosslist on section 1** Cross List Multi-produits, Section 1
Crossliste siehe Kapitel 1 Crosslist Multiproducto en la sección 1
Lista Multi-produto na secção 1 Cross-list Multi prodotto nella sezione 1
Rubriek 1 : Cross list "alle produkten" Kombinovaný převodník v sekci 1
Crosslist multi-produse, secţie 1 **Çoklu ürün çapraz listesi bölüm 1 tedir**
Αντιστοιχίες προϊόντων στο κεφάλαιο 1

		CC				OE	Valeo	DIM	TECH
CITROËN (.../...)									
C4 PICASSO (2006>) (.../...)									
2.0 i 16V ▸11381	E	1997	EW10A	R134	09/06 ▸ 01/08	6455EW	**818170**	535 361	AL
2.0 i 16V 11381 ▸	E	1997	EW10A	R134	02/08 ▸	6455GH	**818171**	568 361	AL
1.6 HDi 16V ▸11381	D	1560	DV6TED4	R134	09/06 ▸ 01/08	6455EW	**818170**	535 361	AL
1.6 HDi 16V 11381 ▸	D	1560	DV6TED4	R134	02/08 ▸	6455GH	**818171**	568 361	AL
2.0 HDi 16V ▸11381	D	1997	DW10BTED4	R134	09/06 ▸ 01/08	6455EW	**818170**	535 361	AL
2.0 HDi 16V 11381 ▸	D	1997	DW10BTED4	R134	02/08 ▸	6455GH	**818171**	568 361	AL
C5 (2001>2004)									
1.8 i 16V	E	1749	EW7J4	R134	02/01 ▸ 08/04	6453FH	**817464**	516 360	AL
2.0 HPi 16V, 2.0 i 16V	E	1997	EW10D, EW10J4	R134	02/01 ▸ 08/04	6453FH	**817464**	516 360	AL
3.0 i V6 24V	E	2946	ES9J4S	R134	02/01 ▸ 08/04	6453FP	**817465**	518 367	AL
2.0 HDi	D	1997	DW10ATED, DW10TD	R134	02/01 ▸ 08/04	6453FH	**817464**	516 360	AL
2.2 HDi 16V	D	2179	DW12TED4	R134	02/01 ▸ 08/04	6453FH	**817464**	516 360	AL
C5 (2004>)									
1.8 i 16V	E	1749	EW7J4	R134	09/04 ▸	6455FX	**817824**	560 361	AL
2.0 i 16V	E	1997	EW10A	R134	09/04 ▸	6455FX	**817824**	560 361	AL
2.2 i 16V	E	2230	EW12J4	R134	09/04 ▸	6455FX	**817824**	560 361	AL
3.0 i V6 24V	E	2946	ES9A	R134	09/04 ▸	6455FX	**817824**	560 361	AL
1.6 HDi 16V	D	1560	DV6TED4	R134	09/04 ▸	6455FX	**817824**	560 361	AL
2.0 HDi 16V	D	1997	DW10BTED4	R134	09/04 ▸	6455FX	**817824**	560 361	AL
2.2 HDi 16V	D	2179	DW12TED4	R134	09/04 ▸	6455FX	**817824**	560 361	AL
2.2 HDi 16V	D	2179	DW12BTED4	R134	02/06 ▸	6455EY	**817740**	669 303	AL
C5 (2008>)									
1.8 i 16V	E	1749	EW7A	R134	03/08 ▸	6455GY	**814090**	539 361	AL
2.0 i 16V	E	1997	EW10A	R134	03/08 ▸	6455GY	**814090**	539 361	AL
1.6 HDi	D	1560	DV6TED4	R134	03/08 ▸	6455GY	**814090**	539 361	AL
2.0 HDi	D	1997	DW10BTED4	R134	03/08 ▸	6455GY	**814090**	539 361	AL
2.0 HDi 16V 11954 ▸	D	1997	DW10BTED4,DW10CTED4		03/08 ▸	6455HV	•**814363**	574 361	AL
2.2 HDi	D	2179	DW12BTED4		03/08 ▸	6455GZ	**814173**		AL
2.7 HDi V6	D	2720	DT17BTED4		03/08 ▸	6455GZ	**814173**		AL
3.0 i V6	E	2946	ES9A	R134	03/08 ▸	6455GY	**814090**	539 361	AL
C6									
3.0 i V6 24V	E	2946	ES9A	R134	12/05 ▸	6455FX	**817824**	560 361	AL
3.0 i V6 24V 11557 ▸	E	2946	ES9A		06/08 ▸	6455GY	**814090**	539 361	AL
2.2 HDi 16V	D	2179	DW12BTED4	R134	10/06 ▸	6455EY	**817740**	669 303	AL
2.7 HDi V6 24V	D	2720	DT17TED4	R134	12/05 ▸	6455EY	**817740**	669 303	AL
2.7 HDi V6 24V 11557 ▸	D	2720	DT17BTED4	R134	06/08 ▸	6455GZ	**814173**		AL
C8									
2.0 i 16V	E	1997	EW10J4	R134	06/02 ▸	6455AP	**817579**	560 450	AL
2.2 i 16V	E	2230	EW12J4	R134	06/02 ▸	6455AP	**817579**	560 450	AL
3.0 i V6 24V	E	2946	ES9J4S	R134	06/02 ▸	6455AQ	**817668**	712 364	AL
2.0 HDi 16V	D	1997	DW10ATED4	R134	06/02 ▸	6455AP	**817579**	560 450	AL
2.0 HDi 16V	D	1997	DW10BTED4,DW10CB DW10CTED4,DW10UTED4		04/06 ▸	6455HS	•**814366**	590 361	AL
2.2 HDi 16V	D	2179	DW12TED4	R134	06/02 ▸	6455AP	**817579**	560 450	AL
2.2 HDi 16V	D	2179	DW12BTED4		12/07 ▸	6455FW	**814065**	678 355	AL
C CROSSER									
2.0 i 147 16V	E	1998	4B11MMC		01/11 ▸	6455HP	**814315**	616 407	AL

Valeo recommends replacing the receiver drier with the condenser
Pensez à changer la bouteille déshydratante avec le condenseur
Denken Sie daran, beim Wechsel des Kondensators auch den Trockner zu erneuern
Piense en la sustitución del filtro deshidratante con el condensador
A Valeo recomenda substituir o filtro desidratante com o condensador
Ricordatevi di sostituire il filtro disidratatore insieme al condensatore
Bij de vervanging van de condensor, vervang tevens de filter-droger

Valeo zaleca wymianę filtra osuszacza wraz ze skraplaczem
Рекомендируем замену осушителя вместо с конденсором
Spolu s kondenzátorem je nutné vyměnit také vysoušeč
Nu uitați sa schimbați uscatorul cu condensatorul
Kondenser değişimlerinde nem alıcının da değiştirilmesi gerektiğini dikkate alınız
Πρέπει να αντικαταστήσετε το φίλτρο υγρού μαζί με το συμπυκνωτή

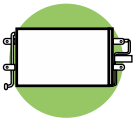

		CC				OE	Valeo	DIM	TECH
							CITROËN	(.../...)	
C CROSSER (.../...)									
2.4 i 16V	E	2360	4B12MIVIC	+❄	01/08 ▸	6455HP	**814315**	616 407	AL
2.2 HDi 16V	D	2179	DW12MTED4	+❄/ R134	07/07 ▸	6455FA	**814315**	616 407	AL
DS3									
1.4 VTi 16V	E	1397	EP3C	+❄/ R134	03/10 ▸	6455HA	**814095**	464 371	AL
1.6 VTi 16V	E	1598	EP6C	+❄/ R134	03/10 ▸	6455HA	**814095**	464 371	AL
1.6 THP 16V,1.6 VTi 16V	E	1598	EP6C,EP6DT	+❄	03/10 ▸	6455HF	**818015**	524 368	AL
1.4 HDi 68	D	1398	DV4C	+❄	10/10 ▸	6455JF	**814095**	464 371	AL
1.6 HDI	D	1560	DV6C,DV6DTED	+❄	03/10 ▸	6455JF	**814095**	464 371	AL
1.6 HDI	D	1560	DV6C,DV6DTED	+❄	03/10 ▸	6455HF	**818015**	524 368	AL
DS4									
1.6 VTi 16V	E	1598	EP6C,EP6CDT,EP6CDTX	+❄/ R134	04/11 ▸	6455GH	**818171**	568 361	AL
1.6 Hdi	D	1560	DV6C	+❄/ R134	04/11 ▸	6455GH	**818171**	568 361	AL
DS5									
1.6 THP 16V	E	1598	EP6CDT,EP6CDTX	+❄	10/11 ▸	6455GH	**818171**	568 361	AL
1.6 e-HDi 110 16V	D	1560	DV6C	+❄	10/11 ▸	6455GH	**818171**	568 361	AL
EVASION (94>98)									
1.8 i	E	1761	XU7JP		07/96 ▸ 09/98	6455Y3	**816852**	690 462	AL
2.0 i, 2.0 i Turbo CT	E	1998	XU10J2C, XU10J2CTEL3		07/94 ▸ 09/98	6455Y3	**816852**	690 462	AL
1.9 TD	D	1905	XUD9BTF, XUD9TEF, XUD9TF		10/94 ▸ 09/98	6455Y3	**816852**	690 462	AL
2.1 TD	D	2088	XUD11BTE		04/96 ▸ 09/98	6455Y3	**816852**	690 462	AL
EVASION (98>2002)									
1.8 i	E	1761	XU7JP		10/98 ▸ 05/02	6455Y3	**816852**	690 462	AL
2.0 i 16V	E	1997	EW10J4		07/00 ▸ 05/02	6455Y3	**816852**	690 462	AL
2.0 i, 2.0 i 16V, 2.0 i Turbo CT	E	1998	XU10J2C, XU10J2CTEL3 XU10J4R		10/98 ▸ 05/02	6455Y3	**816852**	690 462	AL
1.9 TD	D	1905	XUD9BTF		10/98 ▸ 05/02	6455Y3	**816852**	690 462	AL
2.0 HDi, 2.0 HDi 16V	D	1997	DW10ATED, DW10ATED4		08/99 ▸ 05/02	6455Y3	**816852**	690 462	AL
2.1 TD	D	2088	XUD11BTE		10/98 ▸ 05/02	6455Y3	**816852**	690 462	AL
SAXO (96>99)									
1.1 i, 1.1 i GPL	E	1124	TU1M+		03/96 ▸ 08/99	6455V0	**816964**	542 312	AL
1.4 i	E	1360	TU3JP		03/96 ▸ 08/99	6455V0	**816964**	542 312	AL
1.6 i, 1.6 i 16V	E	1587	TU5J4, TU5JP		03/96 ▸ 08/99	6455V0	**816964**	542 312	AL
1.5 D	D	1527	TUD5, TUD5B		05/96 ▸ 08/99	6455V0	**816964**	542 312	AL
SAXO (99>)									
1.0 i	E	954	TU9M	R134	09/99 ▸ 12/03	6455Z1	**817655**	588 321	AL
1.1 i, 1.1 i GPL ▸ 8575	E	1124	TU1M+		09/99 ▸ 05/00	6455Z1	**817655**	588 321	AL
1.4 i ▸ 8575	E	1360	TU3JP		09/99 ▸ 05/00	6455Z1	**817655**	588 321	AL
1.6 i, 1.6 i 16V ▸ 8575	E	1587	TU5J4, TU5JP		09/99 ▸ 05/00	6455Z1	**817655**	588 321	AL
1.5 D ▸ 8575	D	1527	TUD5, TUD5B		09/99 ▸ 05/00	6455Z1	**817655**	588 321	AL
SYNERGIE (95>98)									
1.8 i	E	1761	XU7JP		07/96 ▸ 09/98	6455Y3	**816852**	690 462	AL
2.0 i	E	1998	XU10J2C		10/95 ▸ 09/98	6455Y3	**816852**	690 462	AL
1.9 TD	D	1905	XUD9BTF, XUD9TEF		10/95 ▸ 09/98	6455Y3	**816852**	690 462	AL
SYNERGIE (98>2002)									
2.0 i 16V	E	1997	EW10J4		07/00 ▸ 05/02	6455Y3	**816852**	690 462	AL

• **New** Nouveau **Neu** Nuevo **Novo** Nuovo **Nieuw** Nowi **Новый** Novy **Nou** Yeni **Νέους**

⏭ **Multi-product Crosslist on section 1** Cross List Multi-produits, Section 1
Crossliste siehe Kapitel 1 Crosslist Multiproducto en la sección 1
Lista Multi-produto na secção 1 Cross-list Multi prodotto nella sezione 1
Rubriek 1 : Cross list "alle produkten" Kombinovaný převodník v sekci 1
Crosslist multi-produse, secţie 1 **Çoklu ürün çapraz listesi bölüm 1 tedir**
Αντιστοιχίες προϊόντων στο κεφάλαιο 1

		CC				OE	Valeo	DIM	TECH
CITROËN (.../...)									
SYNERGIE (98>2002) (.../...)									
2.0 i	E	1998	XU10J2C		10/98 ▸ 05/02	6455Y3	**816852**	690 462	AL
1.9 TD	D	1905	XUD9BTF		10/98 ▸ 05/02	6455Y3	**816852**	690 462	AL
2.0 HDi	D	1997	DW10ATED		08/99 ▸ 05/02	6455Y3	**816852**	690 462	AL
XANTIA (93>97)									
1.6 i 6594 ▸	E	1580	XU5JP		01/95 ▸ 12/97	6453V5	**816803**	532 348	AL
1.8 i, 1.8 i 16V	E	1761	XU7JB, XU7JP, XU7JP4		07/95 ▸ 12/97	6453V5	**816803**	532 348	AL
2.0 i, 2.0 i 16V, 2.0 i Turbo CT 6594 ▸	E	1998	XU10J2C, XU10J2CTEL3 XU10J4, XU10J4R		01/95 ▸ 12/97	6453V5	**816803**	532 348	AL
3.0 i V6 24V	E	2946	ES9J4		11/96 ▸ 12/97	6453V5	**816803**	532 348	AL
1.9 D, 1.9 SD, 1.9 TD 6594 ▸	D	1905	XUD9A, XUD9BTF, XUD9SD XUD9TEF		07/95 ▸ 12/97	6453V5	**816803**	532 348	AL
2.1 TD	D	2088	XUD11BTE		07/95 ▸ 12/97	6453V5	**816803**	532 348	AL
XANTIA (97>2002)									
1.6 i	E	1580	XU5JP		12/97 ▸ 05/02	6453V5	**816803**	532 348	AL
1.8 i, 1.8 i 16V, 1.8 i GPL 16V	E	1761	XU7JB, XU7JP, XU7JP4		12/97 ▸ 05/02	6453V5	**816803**	532 348	AL
2.0 i, 2.0 i 16V, 2.0 i Turbo CT	E	1998	XU10J2C, XU10J2CTEL3 XU10J4R		12/97 ▸ 05/02	6453V5	**816803**	532 348	AL
3.0 i V6 24V	E	2946	ES9J4		12/97 ▸ 05/02	6453V5	**816803**	532 348	AL
1.9 SD, 1.9 TD	D	1905	XUD9BTF, XUD9SD		12/97 ▸ 05/02	6453V5	**816803**	532 348	AL
2.0 HDi	D	1997	DW10ATED, DW10TD		10/98 ▸ 05/02	6453V5	**816803**	532 348	AL
2.1 TD	D	2088	XUD11BTE		12/97 ▸ 05/02	6453V5	**816803**	532 348	AL
XM (89>94)									
2.0, 2.0 i, 2.0 i Turbo CT	E	1998	XU102C, XU10J2, XU10J2TE XU10M		09/93 ▸ 06/94	6455Y6	**816850**	552 352	AL
3.0 i V6, 3.0 i V6 24V	E	2963	ZPJ, ZPJ4		09/93 ▸ 06/94	6455Y6	**816850**	552 352	AL
3.0 i V6	E	2975	ZPJ		09/93 ▸ 06/94	6455Y6	**816850**	552 352	AL
2.1 TD Turbo D12 12V	D	2088	XUD11ATE		09/93 ▸ 06/94	6455Y6	**816850**	552 352	AL
2.1 D12	D	2138	XUD11A		09/93 ▸ 06/94	6455Y6	**816850**	552 352	AL
XM (94>2001)									
2.0 i 16V, 2.0 i Turbo CT	E	1998	XU10J2TE, XU10J4R		07/94 ▸ 07/01	6455Y6	**816850**	552 352	AL
3.0 i V6 24V	E	2946	ES9J4		07/97 ▸ 07/01	6455Y6	**816850**	552 352	AL
3.0 i V6, 3.0 i V6 24V	E	2963	ZPJ, ZPJ4		07/94 ▸ 05/99	6455Y6	**816850**	552 352	AL
2.1 TD Turbo D12 12V	D	2088	XUD11ATE, XUD11BTE		07/94 ▸ 07/01	6455Y6	**816850**	552 352	AL
2.1 D12	D	2138	XUD11A		07/94 ▸ 06/96	6455Y6	**816850**	552 352	AL
2.5 TD Turbo D	D	2446	DK5ATE		07/94 ▸ 07/01	6455Y6	**816850**	552 352	AL
XSARA (97>2000)									
1.4 i, 1.4 i GPL	E	1360	TU3JP		07/97 ▸ 08/00	6455AV	**817230**	568 341	AL
1.6 i	E	1587	TU5JP		07/97 ▸ 08/00	6455AV	**817230**	568 341	AL
1.8 i, 1.8 i 16V, 1.8 i GPL 16V	E	1761	XU7JB, XU7JP, XU7JP4		07/97 ▸ 08/00	6455AV	**817230**	568 341	AL
2.0 i 16V	E	1998	XU10J4R, XU10J4RS		01/98 ▸ 08/00	6455AV	**817230**	568 341	AL
1.5 D	D	1527	TUD5		03/98 ▸ 08/00	6455AW	**817229**	628 341	AL
1.8 D	D	1769	XUD7		03/98 ▸ 08/00	6455Y2	**817042**	630 339	AL
1.9 D	D	1868	DW8		09/98 ▸ 08/00	6455Y2	**817042**	630 339	AL
1.9 D, 1.9 SD, 1.9 TD	D	1905	XUD9A, XUD9BSD, XUD9SD XUD9TE		07/97 ▸ 08/00	6455Y2	**817042**	630 339	AL
2.0 HDi	D	1997	DW10TD		03/99 ▸ 08/00	6455Y2	**817042**	630 339	AL
XSARA (2000>)									
1.4 i	E	1360	TU3JP	+/ R134	09/00 ▸	6455CV	**817508**	518 364	AL
1.6 i 16V	E	1587	TU5JP4	+/ R134	09/00 ▸	6455CV	**817508**	518 364	AL
2.0 i 16V	E	1997	EW10J4	+/ R134	09/00 ▸	6455CV	**817508**	518 364	AL
2.0 i 16V	E	1998	XU10J4RS		09/00 ▸	6455AV	**817230**	568 341	AL

Valeo recommends replacing the receiver drier with the condenser
Pensez à changer la bouteille déshydratante avec le condenseur
Denken Sie daran, beim Wechsel des Kondensators auch den Trockner zu erneuern
Piense en la sustitución del filtro deshidratante con el condensador
A Valeo recomenda substituir o filtro desidratante com o condensador
Ricordatevi di sostituire il filtro disidratatore insieme al condensatore
Bij de vervanging van de condensor, vervang tevens de filter-droger

Valeo zaleca wymianę filtra osuszacza wraz ze skraplaczem
Рекомендируем замену осушителя вместо с конденсором
Spolu s kondenzátorem je nutné vyměnit také vysoušeč
Nu uitați sa schimbați uscatorul cu condensatorul
Kondenser değişimlerinde nem alıcının da değiştirilmesi gerektiğini dikkate alınız
Πρέπει να αντικαταστήσετε το φίλτρο υγρού μαζί με το συμπυκνωτή

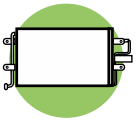

		CC				OE	Valeo	DIM	TECH
CITROËN (.../...)									
XSARA (2000>) (.../...)									
1.4 HDi	D	1399	DV4TD	R134	01/03 ▸	6455CV	**817508**	518 364	AL
1.9 D	D	1868	DW8B	R134	09/00 ▸	6455CV	**817508**	518 364	AL
1.9 D	D	1868	DW8B	R134	12/01 ▸	6455CQ	**817667**	518 361	AL
2.0 HDi	D	1997	DW10ATED	R134	08/01 ▸	6455CV	**817508**	518 364	AL
2.0 HDi	D	1997	DW10ATED, DW10TD	R134	09/00 ▸	6455CQ	**817667**	518 361	AL
XSARA PICASSO									
1.6 i	E	1587	TU5JP	R134	12/99 ▸	6455CV	**817508**	518 364	AL
1.8 i 16V	E	1749	EW7J4	R134	12/99 ▸	6455CV	**817508**	518 364	AL
2.0 i 16V	E	1997	EW10J4	R134	01/03 ▸	6455CV	**817508**	518 364	AL
1.6 HDi 16V	D	1560	DV6ATED4, DV6TED4	R134	03/04 ▸	6455CN	**814080**	520 363	AL
2.0 HDi	D	1997	DW10TD	R134	12/99 ▸ 10/03	6455CV	**817508**	518 364	AL
2.0 HDi 9877 ▸	D	1997	DW10TD	R134	11/03 ▸	6455CN	**814080**	520 363	AL
ZX									
1.1, 1.1 i	E	1124	TU1, TU1M, TU1M+		01/93 ▸ 01/97	6455Q9	**817230**	568 341	AL
1.4, 1.4 i	E	1360	TU3.2, TU3JP, TU3M TU3MC		01/93 ▸ 01/97	6455Q9	**817230**	568 341	AL
1.6 i	E	1580	XU5JP, XU5M, XU5M2		01/93 ▸ 01/97	6455Q9	**817230**	568 341	AL
1.8 i	E	1761	XU7JP		01/93 ▸ 01/97	6455Q9	**817230**	568 341	AL
1.9 i	E	1905	XU9JA		01/93 ▸ 08/93	6455Q9	**817230**	568 341	AL
2.0 i, 2.0 i 16V	E	1998	XU10J2C, XU10J4 XU10J4RS		01/93 ▸ 01/97	6455Q9	**817230**	568 341	AL
1.4 D	D	1360	TUD3		07/94 ▸ 01/97	6455Q9	**817230**	568 341	AL
1.5 D	D	1527	TUD5		07/94 ▸ 01/97	6455Q9	**817230**	568 341	AL
1.8 D	D	1769	XUD7		01/93 ▸ 01/97	6455Q9	**817230**	568 341	AL
1.9 D, 1.9 TD	D	1905	XUD9, XUD9A, XUD9TE		01/93 ▸ 07/98	6455Q9	**817230**	568 341	AL
CITROËN									
BERLINGO (96>2002)									
1.1 i	E	1124	TU1M+		07/96 ▸ 06/97	6455Q9	**817230**	568 341	AL
1.4, 1.4 i	E	1360	TU3.2, TU3JP		07/96 ▸ 06/97	6455Q9	**817230**	568 341	AL
1.8 i	E	1761	XU7JB	N/ R134	07/97 ▸ 12/02	6455AV	**817230**	568 341	AL
1.8 D	D	1769	XUD7		07/99 ▸ 12/02	6455Y2	**817042**	630 339	AL
1.9 D	D	1868	DW8		07/99 ▸ 12/02	6455Y2	**817042**	630 339	AL
1.9 D	D	1905	XUD9A		07/99 ▸ 12/02	6455Y2	**817042**	630 339	AL
2.0 HDi	D	1997	DW10TD		10/99 ▸ 12/02	6455Y2	**817042**	630 339	AL
BERLINGO (2002>)									
1.1 i	E	1124	TU1JP	R134	12/02 ▸	6455CV	**817508**	518 364	AL
1.4 i	E	1360	TU3JP	R134	12/02 ▸	6455CV	**817508**	518 364	AL
1.6 i 16V	E	1587	TU5JP4	R134	12/02 ▸	6455CV	**817508**	518 364	AL
1.6 HDi 16V	D	1560	DV6ATED4, DV6BTED4	R134	01/06 ▸	6455CN	**814080**	520 363	AL
1.9 D	D	1868	DW8B	R134	12/02 ▸	6455CV	**817508**	518 364	AL
2.0 HDi	D	1997	DW10TD	R134	12/02 ▸	6455CV	**817508**	518 364	AL
BERLINGO (2008>)									
1.6 i 16V	E	1587	TU5JP4, TU5JP4B	R134	05/08 ▸	6455GK	**818170**	535 361	AL
BERLINGO (B9) (2008>)									
1.6 VTi 16V	E	1598	EP6C,EP6C DTR		11/09 ▸	6455GH	**818171**	568 361	AL
BERLINGO (2008>)									
1.6 HDi 16V	D	1560	DV6ATED4, DV6AUTED4 DV6BTED4, DV6BUTED4 DV6TED4	R134	05/08 ▸	6455CX	**818171**	568 361	AL
DISPATCH (95>2003)									
1.6 i	E	1581	160A	R134	09/95 ▸ 12/03	6455Y3	**816852**	690 462	AL

• **New** Nouveau **Neu** Nuevo **Novo** Nuovo **Nieuw** Nowi **Новый** Novy **Nou** Yeni **Νέους**

⏭ **Multi-product Crosslist on section 1** Cross List Multi-produits, Section 1
Crossliste siehe Kapitel 1 Crosslist Multiproducto en la sección 1
Lista Multi-produto na secção 1 Cross-list Multi prodotto nella sezione 1
Rubriek 1 : Cross list "alle produkten" Kombinovaný převodník v sekci 1
Crosslist multi-produse, secţie 1 **Çoklu ürün çapraz listesi bölüm 1 tedir**
Αντιστοιχίες προϊόντων στο κεφάλαιο 1

		CC				OE	Valeo	DIM	TECH
CITROËN (.../...)									
DISPATCH (95>2003) (.../...)									
1.9 D	D	1868	DW8	R134	02/99 ▸ 12/03	6455Y3	**816852**	690 462	AL
1.9 D,1.9 TD	D	1905	XUD9A,XUD9BTF,XUD9TF	R134	09/95 ▸ 12/03	6455Y3	**816852**	690 462	AL
2.0 HDi	D	1997	DW10ATED,DW10BTED DW10CTED	R134	09/00 ▸ 12/03	6455Y3	**816852**	690 462	AL
DISPATCH (2004>2006)									
1.9 D	D	1868	DW8B	+/ R134	01/04 ▸	6455CV	**817508**	518 364	AL
1.9 D	D	1868	DW8B	R134	01/04 ▸ 12/06	6455Y3	**816852**	690 462	AL
2.0 HDi	D	1997	DW10BTED, DW10BTED+L4	+/ R134	01/04 ▸	6455CV	**817508**	518 364	AL
2.0 HDi	D	1997	DW10BTED,DW10BTED+L4	R134	01/04 ▸ 12/06	6455Y3	**816852**	690 462	AL
DISPATCH (2007>)									
2.0 i 16V	E	1997	EW10A	R134	03/07 ▸	6455AP	**817579**	560 450	AL
1.6 HDi,1.6 HDi 16V	D	1560	DV6DU M,DV6UC,DV6UTED4		01/07 ▸	6455ES	•**814366**	590 361	AL
2.0 HDi 16V	D	1997	DW10BTED4,DW10CD DTR DW10CE DTR,DW10CTED4 DW10UTED4		01/07 ▸	6455HS	•**814366**	590 361	AL
JUMPER (94>2001)									
2.0 i	E	1998	XU10J2U		02/94 ▸ 12/01	6455T3	**818191**	506 349	AL
1.9 D, 1.9 TD	D	1905	XUD9A, XUD9AU, XUD9TEF XUD9UTF		02/94 ▸ 12/01	6455T3	**818191**	506 349	AL
2.0 HDi	D	1997	DW10TD		09/01 ▸ 12/01	6455T3	**818191**	506 349	AL
2.5 D, 2.5 TD, 2.5 TDi	D	2446	DJ5, DJ5T, DJ5TED		02/94 ▸ 12/01	6455T3	**818191**	506 349	AL
2.8 D, 2.8 HDi, 2.8 TD	D	2798	8140-43, 8140-43S 8140-63		06/99 ▸ 12/01	6455T3	**818191**	506 349	AL
JUMPER (2002>)									
2.0 i ▸ 17126575	E	1998	XU10J2U		01/02 ▸ 09/02	6455T3	**818191**	506 349	AL
2.0 i 17126576 ▸ 17520375	E	1998	XU10J2U		04/02 ▸	6455CG	**818018**	516 322	AL
2.0 i 17520376 ▸	E	1998	XU10J2U	+/ R134	04/02 ▸	6455EC	**814081**	568 341	AL
2.0 HDi ▸ 17126575	D	1997	DW10UTD		01/02 ▸ 09/02	6455T3	**818191**	506 349	AL
2.0 HDi 17126576 ▸ 17520375	D	1997	DW10UTD		04/02 ▸	6455CG	**818018**	516 322	AL
2.0 HDi 17520376 ▸	D	1997	DW10UTD	+/ R134	04/02 ▸	6455EC	**814081**	568 341	AL
2.2 HDi ▸ 17126575	D	2179	DW12TED		01/02 ▸ 09/02	6455T3	**818191**	506 349	AL
2.2 HDi 17126576 ▸ 17520375	D	2179	DW12TED		04/02 ▸	6455CG	**818018**	516 322	AL
2.2 HDi 17520376 ▸	D	2179	DW12TED	+/ R134	04/02 ▸	6455EC	**814081**	568 341	AL
2.8 HDi ▸ 17126575	D	2798	F28TDCR		01/02 ▸ 09/02	6455T3	**818191**	506 349	AL
2.8 HDi 17126576 ▸ 17520375	D	2798	F28TDCR		04/02 ▸	6455CG	**818018**	516 322	AL
2.8 HDi 17520376 ▸	D	2798	F28TDCR	+/ R134	04/02 ▸	6455EC	**814081**	568 341	AL
JUMPER (2006>)									
2.2 HDi	D	2229	22DT	+/ R134	07/06 ▸	6455EP	**814069**	748 291	AL
2.2 HDi 16V	D	2229	22DT		07/06 ▸	6455EQ	**814085**	710 375	AL
3.0 HDi	D	2999	F30DT	+/ R134	07/06 ▸	6455EP	**814069**	748 291	AL
JUMPY (95>2003)									
1.6 i	E	1581	160A		09/95 ▸	6455Y3	**816852**	690 462	AL

Valeo recommends replacing the receiver drier with the condenser
Pensez à changer la bouteille déshydratante avec le condenseur
Denken Sie daran, beim Wechsel des Kondensators auch den Trockner zu erneuern
Piense en la sustitución del filtro deshidratante con el condensador
A Valeo recomenda substituir o filtro desidratante com o condensador
Ricordatevi di sostituire il filtro disidratatore insieme al condensatore
Bij de vervanging van de condensor, vervang tevens de filter-droger
Valeo zaleca wymianę filtra osuszacza wraz ze skraplaczem
Рекомендируем замену осушителя вместо с конденсором
Spolu s kondenzátorem je nutné vyměnit také vysoušeč
Nu uitați sa schimbați uscatorul cu condensatorul
Kondenser değişimlerinde nem alıcının da değiştirilmesi gerektiğini dikkate alınız
Πρέπει να αντικαταστήσετε το φίλτρο υγρού μαζί με το συμπυκνωτή

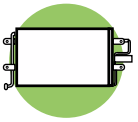

		CC				OE	Valeo	DIM	TECH
CITROËN (.../...)									
JUMPY (95>2003) (.../...)									
1.9 D	D	1868	DW8		05/98 ▸	6455Y3	**816852**	690 462	AL
1.9 D, 1.9 TD	D	1905	XUD9A, XUD9BTF, XUD9TF		09/95 ▸	6455Y3	**816852**	690 462	AL
2.0 Hdi	D	1997	DW10ATED,DW10ATED4 DW10BTED,DW10CTED	R134	09/00 ▸ 12/06	6455Y3	**816852**	690 462	AL
JUMPY (2007>)									
2.0 i 16V	E	1997	EW10A	+/ R134	03/07 ▸	6455AP	**817579**	560 450	AL
1.6 HDi	D	1560	DV6DU M,DV6UC,DV6UTED4		01/07 ▸	6455ES	**•814366**	590 361	AL
2.0 HDi 16V	D	1997	DW10BTED4,DW10CD DTR DW10CE DTR,DW10CTED4 DW10UTED4		01/07 ▸	6455ES	**•814366**	590 361	AL
NEMO									
1.4 i	E	1360	TU3A	+/ R134	12/07 ▸	6455GA	**818193**	552 333	AL
1.3 HDi	D	1248	F13DTE5	+/ R134	09/10 ▸	6455GA	**818193**	552 333	AL
1.4 HDi	D	1398	DV4TED	+/ R134	12/07 ▸	6455GA	**818193**	552 333	AL
RELAY (94>2001)									
2.0 i	E	1998	XU10J2U		02/94 ▸ 08/98	6455T3	**818191**	506 349	AL
1.9 D, 1.9 TD	D	1905	XUD9A, XUD9UTF		02/94 ▸ 12/01	6455T3	**818191**	506 349	AL
2.0 HDi	D	1997	DW10TD	N	09/01 ▸ 12/01	6455T3	**818191**	349 506	AL
2.5 D, 2.5 TD	D	2446	DJ5, DJ5T		02/94 ▸ 08/98	6455T3	**818191**	506 349	AL
2.8 HDi	D	2798	8140-43S	N	09/00 ▸ 12/01	6455T3	**818191**	349 506	AL
RELAY (2002>2006)									
2.0 i 17126576 ▸ 17520375	E	1998	XU10J2U	R134	04/02 ▸	6455CG	**818018**	516 322	AL
2.0 i 17520376 ▸	E	1998	XU10J2U	+/ R134		6455EC	**814081**	568 341	AL
2.0 HDi 17126576 ▸ 17520375	D	1997	DW10UTD	R134	04/02 ▸	6455CG	**818018**	516 322	AL
2.0 HDi 17520376 ▸	D	1997	DW10UTD	+/ R134		6455EC	**814081**	568 341	AL
2.0 HDi	D	1997	DW10UTD	N	01/02 ▸ 06/06	6455T3	**818191**	506 349	AL
2.2 HDi 17126576 ▸ 17520375	D	2179	DW12TED	R134	04/02 ▸	6455CG	**818018**	516 322	AL
2.2 HDi 17520376 ▸	D	2179	DW12TED	+/ R134		6455EC	**814081**	568 341	AL
2.2 HDi	D	2179	DW12TED	N	01/02 ▸ 06/06	6455T3	**818191**	506 349	AL
2.8 HDi	D	2798	F28TDCR	N	01/02 ▸ 06/06	6455T3	**818191**	506 349	AL
2.8 HDi 17126576 ▸ 17520375	D	2798	F28TDCR	R134	04/02 ▸	6455CG	**818018**	516 322	AL
2.8 HDi 17520376 ▸	D	2798	F28TDCR	+/ R134		6455EC	**814081**	568 341	AL
RELAY II (2006>)									
2.2 HDi 16V	D	2198	22DT,PUMA C110,PUMA C81 PUMA C96	+	07/06 ▸	6455HC	**814069**	748 291	AL
2.2 HDi 16V	D	2198	22DT,PUMA C110,PUMA C81 PUMA C96		07/06 ▸	6455HE	**814085**	710 375	AL
3.0 HDi 16V	D	2999	F30DT	+	07/06 ▸	6455HC	**814069**	748 291	AL
3.0 HDi 16V	D	2999	F30DT		05/07 ▸	6455HE	**814085**	710 375	AL
DACIA									
DUSTER									
1.5 dCi	D	1461	K9K.8.96	+/ R134	06/10 ▸	8200880551	**814178**	621 322	AL
LOGAN, MCV, PICK-UP									
1.4 MPI	E	1390	K7J.7.10	+/ R134	09/04 ▸	8200241088	**817827**	514 377	AL

• **New** Nouveau **Neu** Nuevo **Novo** Nuovo **Nieuw** Nowi **Новый** Novy **Nou** Yeni **Νέους**

⏭ **Multi-product Crosslist on section 1** Cross List Multi-produits, Section 1
Crossliste siehe Kapitel 1 Crosslist Multiproducto en la sección 1
Lista Multi-produto na secção 1 Cross-list Multi prodotto nella sezione 1
Rubriek 1 : Cross list "alle produkten" Kombinovaný převodník v sekci 1
Crosslist multi-produse, secţie 1 **Çoklu ürün çapraz listesi bölüm 1 tedir**
Αντιστοιχίες προϊόντων στο κεφάλαιο 1

		CC				OE	Valeo	DIM	TECH
DACIA (.../...)									
LOGAN, MCV, PICK-UP (.../...)									
1.4 MPI ▸070120	E	1390	K7J.7.10	R134	09/04 ▸	8200513983	**814051**	514 377	AL
1.6 MPI	E	1598	K7M.7.10	+/ R134	09/04 ▸	8200241088	**817827**	514 377	AL
1.6 MPI, 1.6 i, 1.6 i 16V 070120 ▸	E	1598	K4M.6.90, K4M.6.94 K7M.7.10, K7M.7.14	R134	09/04 ▸	6001550660	**814051**	514 377	AL
1.5 dCi	D	1461	K9K		09/05 ▸	8200182361	**817701**	538 388	AL
SANDERO									
1.4 MPI	E	1390	K7J.7.10	+/ R134	06/08 ▸	6001550660	**814051**	514 377	AL
1.4 MPI	E	1390	K7J.7.10	+/ R134	06/08 ▸	8200741257	**814077**	513 396	AL
1.6 MPI	E	1598	K7M.7.10, K7M.7.14	+/ R134	06/08 ▸	6001550660	**814051**	514 377	AL
1.6 MPI	E	1598	K7M.7.10, K7M.7.14	+/ R134	06/08 ▸	8200741257	**814077**	513 396	AL
DAEWOO									
ESPERO									
2.0 i	E	1998	C20LE		09/93 ▸ 05/99	96265216	**814277**	624 353	AL
KALOS									
1.2 i	E	1150	T4	+/ R134	01/03 ▸ 07/05	96539632	•**818061**	542 414	AL
1.2 i	E	1150	T4	+/ R134	01/03 ▸ 07/05	96539634	•**814344**	542 415	AL
1.4 i,1.4 i 16V	E	1399	E-TECII	+/ R134	09/02 ▸ 07/05	96539632	•**818061**	542 414	AL
1.4 i GPL 16V	F	1399	E-TECII-GPL	+/ R134	01/03 ▸ 07/05	96539634	•**814344**	542 415	AL
1.4 i,1.4 i 16V	E	1399	E-TECII	+/ R134	09/02 ▸ 07/05	96539634	•**814344**	542 415	AL
1.4 i GPL 16V	F	1399	E-TECII-GPL	+/ R134	01/03 ▸ 07/05	96539632	•**818061**	542 414	AL
MATIZ (2000>)									
0.8 i 577031 ▸ 745691	E	796	F8CV	R134	10/00 ▸	96566331	•**818060**	506 294	AL
1.0 i 745692 ▸	E	995	B10S	R134	10/02 ▸	96569392	•**818060**	506 294	AL
MATIZ (98>2000)									
0.8 i 577031 ▸ 745691	E	796	F8CV	R134	03/98 ▸ 09/00	96566331	•**818060**	506 294	AL
NEXIA									
1,5 i	E	1498	A15MF, G15MF		03/95 ▸ 07/05	96265216	**814277**	624 353	AL
DAF									
XF95-SERIES									
FA 95.380	D	12580	XE 280 C		09/02 ▸ 12/06	1629115	**818986**	500 538	AL
FA 95.430	D	12580	XE 315 C		09/02 ▸ 12/06	1629115	**818986**	500 538	AL
FA 95.480	D	12580	XE 355 C		09/02 ▸ 12/06	1629115	**818986**	500 538	AL
FA 95.530	D	12580	XE 390 C		09/02 ▸ 12/06	1629115	**818986**	500 538	AL
FT 95.380	D	12580	XE 280 C		09/02 ▸ 12/06	1629115	**818986**	500 538	AL
FT 315	D	12580	XE 315 C		09/02 ▸ 12/06	1629115	**818986**	500 538	AL
FT 355	D	12580	XE 355 C		09/02 ▸ 12/06	1629115	**818986**	500 538	AL
XF105-SERIES									
FA 105.410	D	12900	MX 300		10/05 ▸	1629115	**818986**	500 538	AL
FA 105.460	D	12900	MX 340		10/05 ▸	1629115	**818986**	500 538	AL
FA 105.510	D	12900	MX 375		10/05 ▸	1629115	**818986**	500 538	AL

Valeo recommends replacing the receiver drier with the condenser
Pensez à changer la bouteille déshydratante avec le condenseur
Denken Sie daran, beim Wechsel des Kondensators auch den Trockner zu erneuern
Piense en la sustitución del filtro deshidratante con el condensador
A Valeo recomenda substituir o filtro desidratante com o condensador
Ricordatevi di sostituire il filtro disidratatore insieme al condensatore
Bij de vervanging van de condensor, vervang tevens de filter-droger

Valeo zaleca wymianę filtra osuszacza wraz ze skraplaczem
Рекомендируем замену осушителя вместо с конденсором
Spolu s kondenzátorem je nutné vyměnit také vysoušeč
Nu uitați sa schimbați uscatorul cu condensatorul
Kondenser değişimlerinde nem alıcının da değiştirilmesi gerektiğini dikkate alınız
Πρέπει να αντικαταστήσετε το φίλτρο υγρού μαζί με το συμπυκνωτή

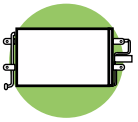

	CC			2 3	OE	Valeo	DIM	TECH
DAIHATSU								
TERIOS 2 (2006>)								
1.3 VVT 16V	E	1298	K3-VE	+/ R134	05/06 ▸ 11/06	88450B4020	**814206**	526 365	AL
1.5 VVT 16V	E	1495	3SZ-VE	+/ R134	05/06 ▸	88450B4020	**814206**	526 365	AL
FIAT								
BRAVA								
1.2 i 16V	E	1242	182B2.000, 188A5.000	Type Magneti Marelli	10/98 ▸ 01/01	46527737	**818009**	556 310	AL
1.4 i, 1.4 i 12V 4540396 ▸	E	1372	182A3.000, 182A5.000	Type Magneti Marelli	11/97 ▸ 09/98	46527737	**818009**	556 310	AL
1.6 i 16V 4540396 ▸	E	1581	182A4.000, 182A6.000	Type Magneti Marelli	11/97 ▸ 09/98	46527737	**818009**	556 310	AL
1.6 i 16V	E	1596	182B6.000	R134	10/98 ▸ 02/01	46527737	**818009**	556 310	AL
1.8 i	E	1747	182A2.000		10/97 ▸	46532988	**818019**	560 312	AL
BRAVO								
1.2 i 16V	E	1242	182B2.000, 188A5.000	Type Magneti Marelli	10/98 ▸	46527737	**818009**	556 310	AL
1.4 i	E	1372	182A3.000, 182A5.000	Type Magneti Marelli	11/97 ▸ 09/98	46527737	**818009**	556 310	AL
1.6 i 16V	E	1581	182A4.000, 182A6.000	Type Magneti Marelli	11/97 ▸	46527737	**818009**	556 310	AL
1.6 i 16V	E	1596	182B6.000	Type Magneti Marelli	10/98 ▸	46527737	**818009**	556 310	AL
1.8 i 16V	E	1747	182A2.000		10/97 ▸	46532988	**818019**	560 312	AL
2.0 i 20V	E	1998	182B7.000		10/98 ▸	46532988	**818019**	560 312	AL
1.9 JTD	D	1910	182B9.000	Type Valeo	03/00 ▸	46754752	**817384**	490 327	AL
BRAVO II (2007>)								
1.4 MPi 16V, 1.4 Tjet 16V	E	1368	192B2.000, 198A1.000 198A4.000	+/ R134	02/07 ▸	55700408	**818192**	623 302	AL
1.6 MJTD	D	1598	198A2.000/F, 198A3.000	+/ R134	02/08 ▸	55700408	**818192**	623 302	AL
1.9, 1.9 MJTD, 1.9 MJTD 16V	D	1910	192A1.000, 192A8.000 192B5.000, 937A5.000	+/ R134	02/07 ▸	55700408	**818192**	623 302	AL
BRAVO (2010>)								
2.0 MJTD 165 16V	D	1956	198A5.000,198A5.000/F 844A2.000,844A2.000/F	+/ R134	01/10 ▸	51826520	**818192**	623 302	AL
CROMA								
2.5 TD	D	2500	8144-97Y, 8144-97Y7		01/91 ▸ 12/92	82471989	**814292**	658 331	AL
IDEA (2003>2007)								
1.2 i 16V	E	1242	188A5.000	+/ R134	02/04 ▸ 06/07	46820833	**818021**	560 309	AL
1.4 i 16V	E	1368	192B2.000,350A1.000 843A1.000	+/ R134	10/03 ▸ 06/07	46820833	**818021**	560 309	AL
1.3 JTD Multijet 16V	D	1248	188A9.000,199A3.000	+/ R134	10/03 ▸ 06/07	46820833	**818021**	560 309	AL
1.9 JTD	D	1910	188B2.000		02/04 ▸ 06/07	51708909	**818020**	500 310	AL
IDEA (2007>)								
1.6 MJTD	D	1598	350A2.000/F	+/ R134	07/08 ▸	51804991	**818021**	560 309	AL
MAREA								
1.2 i 16V	E	1242	182B2.000	Type Magneti Marelli	11/98 ▸	46527737	**818009**	556 310	AL
1.4 i 12V 0136600 ▸ 5036718	E	1372	182A3.000	Type Magneti Marelli	10/97 ▸	46527737	**818009**	556 310	AL
1.6 i 16V, 1.6 i Bipower 16V	E	1581	182A4.000, 182B5.098 185A3.000	Type Magneti Marelli	01/97 ▸	46527737	**818009**	556 310	AL
1.6 i 16V, 1.6 i Bipower 16V	E	1581	182A4.000, 182B5.098 185A3.000	Type Valeo	03/00 ▸	46754752	**817384**	490 327	AL
1.6 i 16V	E	1596	182B6.000	Type Magneti Marelli	02/99 ▸ 05/00	46527737	**818009**	556 310	AL
1.6 i 16V	E	1596	182B6.000	Type Valeo	05/00 ▸	46754752	**817384**	490 327	AL
1.8 i 16V 0136600 ▸	E	1747	182A2.000		10/97 ▸	46532988	**818019**	560 312	AL

• **New** Nouveau **Neu** Nuevo **Novo** Nuovo **Nieuw** Nowi **Новый** Novy **Nou** Yeni **Νέους**

⏭ **Multi-product Crosslist on section 1** Cross List Multi-produits, Section 1
Crossliste siehe Kapitel 1 Crosslist Multiproducto en la sección 1
Lista Multi-produto na secção 1 Cross-list Multi prodotto nella sezione 1
Rubriek 1 : Cross list "alle produkten" Kombinovaný převodník v sekci 1
Crosslist multi-produse, secţie 1 **Çoklu ürün çapraz listesi bölüm 1 tedir**
Αντιστοιχίες προϊόντων στο κεφάλαιο 1

		cc				OE	Valeo	DIM	TECH
FIAT (.../...)									
MAREA (.../...)									
2.0 i 20V 0136600 ▸	E	1998	182A1.000, 182B7.000 185A8.000		10/97 ▸	46532988	**818019**	560 312	AL
2.4 JTD, 2.4 TD	D	2387	185A2.000, 185A6.000		07/96 ▸	46440250	**816985**	500 364	AL
2.4 JTD	D	2387	185A6.000		02/99 ▸	46532988	**818019**	560 312	AL
MULTIPLA (98>2003)									
1.6 i 16V, 1.6 i Bipower 16V 1.6 i Blupower 16V	E	1581	182A4.000, 186A3.000 186A4.000	Type Valeo	11/98 ▸	46754752	**817384**	490 327	AL
1.6 i Bipower 16V	E	1596	182B6.000	Type Valeo	08/00 ▸	46754752	**817384**	490 327	AL
1.9 JTD	D	1910	182B4.000, 186A6.000 186A8.000		11/98 ▸	46547675	**818007**	574 296	AL
MULTIPLA (2004>)									
1.6 i 16V, 1.6 i Bi Power 16V ▸2178783	E	1596	182B6.000	Type Valeo	07/04 ▸	46754752	**817384**	490 327	AL
1.9 JTD ▸2178783	D	1910	186A8.000		07/04 ▸	46547675	**818007**	574 296	AL
PANDA (2003>)									
1.1 i	E	1108	187A1.000	R134	09/03 ▸	51767143	**818005**	574 315	AL
1.1 i	E	1108	187A1.000	R134	09/06 ▸	51782753	**818162**	574 315	AL
1.2 i	E	1242	188A4.000	R134	09/03 ▸	51767143	**818005**	574 315	AL
1.2 i	E	1242	188A4.000	R134	09/06 ▸	51782753	**818162**	574 315	AL
1.4 16V	E	1368	169A3.000	R134	09/06 ▸ 10/06	51767143	**818005**	574 315	AL
1.3 JTD Multijet 16V	D	1248	188A9.000	R134	09/03 ▸	51767143	**818005**	574 315	AL
PUNTO II (99>2003)									
1.2 i, 1.2 i 16V	E	1242	188A4.000, 188A5.000	Type Magneti Marelli	07/99 ▸ 01/01	46788049	**817684**	574 311	AL
1.2 i, 1.2 i 16V	E	1242	188A4.000, 188A5.000	R134 / Type Magneti Marelli	01/01 ▸ 06/02	46799862	**818006**	562 310	AL
1.2 i, 1.2 i 16V	E	1242	188A4.000, 188A5.000		06/02 ▸ 06/03	46821270	**818017**	560 309	AL
1.2 i, 1.2 i 16V	E	1242	188A4.000, 188A5.000	Type Valeo	07/99 ▸ 06/03	46829340	**817385**	570 315	AL
1.8 i 16V	E	1747	183A1.000, 188A6.000	Type Magneti Marelli	07/99 ▸ 06/03	46788052	**817685**	498 311	AL
1.9 D, 1.9 JTD	D	1910	188A2.000, 188A3.000 188A7.000	Type Magneti Marelli	07/99 ▸ 06/03	46788052	**817685**	498 311	AL
PUNTO II (2003>)									
1.2 i, 1.2 i 16V, 1.2 i Bipower	E	1242	188A4.000, 188A5.000	R134 / Type Valeo	07/03 ▸	51712975	**817703**	571 315	AL
1.2 i, 1.2 i Bipower	E	1242	188A4.000	R134 / Type Magneti Marelli	07/03 ▸	46820833	**818021**	560 309	AL
1.4 i 16V	E	1368	843A1.000	R134 / Type Magneti Marelli	07/03 ▸	46820833	**818021**	560 309	AL
1.8 i 16V	E	1747	188A6.000	Type Magneti Marelli	07/03 ▸	46788052	**817685**	498 311	AL
1.3 JTD 16V	D	1248	188A9.000	R134 / Type Magneti Marelli	07/03 ▸	46820833	**818021**	560 309	AL
1.9 JTD	D	1910	188A7.000	Type Magneti Marelli	07/03 ▸	46788052	**817685**	498 311	AL
1.9 JTD	D	1910	188B2.000		07/03 ▸	51733013	**818020**	500 310	AL
PUNTO EVO (2009>)									
1.6 TD 120 16V	D	1598	955A3.000	R134	10/09 ▸ 12/11	51826520	**818192**	623 302	AL
GRANDE PUNTO (2005>2008)									
1.2 i 8V	E	1242	199A4.000	R134	10/05 ▸ 01/08	55700406	**818193**	552 333	AL
1.4 MPi 8V, 1.4 i 8V	E	1368	350A1.000	R134	10/05 ▸ 01/08	55700406	**818193**	552 333	AL
1.4 MPi 16V	E	1368	199A6.000	R134	10/05 ▸ 01/08	55700406	**818193**	552 333	AL
1.4 MPi 16V	E	1368	198A4.000	R134	05/07 ▸ 01/08	55700408	**818192**	623 302	AL
1.3 MJTD 16V	D	1248	199A2.000, 199A3.000	R134	10/05 ▸ 01/08	55700408	**818192**	623 302	AL
1.9 JTD	D	1910	199A5.000, 939A1.000	R134	10/05 ▸ 01/08	55700408	**818192**	623 302	AL
GRANDE PUNTO (2008>)									
1.6 MJTD 120 16V	D	1598	955A3.000	R134	01/08 ▸ 12/09	51826520	**818192**	623 302	AL
QUBO									
1.4 i 77	F	1368	350A1.000 GNV	R134	10/09 ▸	55700406	**818193**	552 333	AL

Valeo recommends replacing the receiver drier with the condenser
Pensez à changer la bouteille déshydratante avec le condenseur
Denken Sie daran, beim Wechsel des Kondensators auch den Trockner zu erneuern
Piense en la sustitución del filtro deshidratante con el condensador
A Valeo recomenda substituir o filtro desidratante com o condensador
Ricordatevi di sostituire il filtro disidratatore insieme al condensatore
Bij de vervanging van de condensor, vervang tevens de filter-droger
Valeo zaleca wymianę filtra osuszacza wraz ze skraplaczem
Рекомендируем замену осушителя вместо с конденсором
Spolu s kondenzátorem je nutné vyměnit také vysoušeč
Nu uitați sa schimbați uscatorul cu condensatorul
Kondenser değişimlerinde nem alıcının da değiştirilmesi gerektiğini dikkate alınız
Πρέπει να αντικαταστήσετε το φίλτρο υγρού μαζί με το συμπυκνωτή

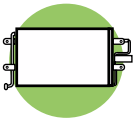

		CC				OE	Valeo	DIM	TECH
FIAT									
QUBO (.../...)									
1.3 MJTD 75 16V	D	1248	199A2.000	R134	05/08 ▸	55700406	**818193**	552 333	AL
STILO (2001>2004)									
1.2 i 16V	E	1242	188A5.000	R134	09/01 ▸ 12/03	46745840	**817669**	534 341	AL
1.6 i 16V	E	1596	182B6.000	R134	09/01 ▸ 12/03	46745840	**817669**	534 341	AL
1.8 i 16V	E	1747	192A4.000	R134	09/01 ▸ 12/03	46745840	**817669**	534 341	AL
2.4 i 20V	E	2446	192A2.000	R134	09/01 ▸ 12/03	46745840	**817669**	534 341	AL
1.9 JTD	D	1910	192A1.000, 192A3.000	R134	09/01 ▸ 12/03	46745840	**817669**	534 341	AL
STILO (2004>)									
1.4 16V, 1.4 i 16V	E	1368	843A1.000,192B2.000	R134	01/04 ▸	46745840	**817669**	534 341	AL
1.6 16V, 1.6 i 16V	E	1596	1780000000, 182B6 192B3.000	R134	01/04 ▸	46745840	**817669**	534 341	AL
1.8 16V, 1.8 i 16V	E	1747	192A4.000	R134	01/04 ▸	46745840	**817669**	534 341	AL
2.4 i 20V	E	2446	192A2.000	R134	01/04 ▸	46745840	**817669**	534 341	AL
1.9 JTD, 1.9 JTD 16V 1.9 JTD Multijet/16V	D	1910	192A1.000, 192A3.000 192A5.000, 937A4.000	R134	01/04 ▸	46745840	**817669**	534 341	AL
ULYSSE (94>98)									
1.8 ie	E	1761	LFW		03/96 ▸ 09/98	1486721080	**816852**	690 462	AL
2.0 ie, 2.0 ie Turbo	E	1998	RFU, RGX		06/94 ▸ 09/98	1486721080	**816852**	690 462	AL
1.9 TD	D	1905	XUD9TEF/K, XUD9TEF/L3 XUD9TEF/Y		06/94 ▸ 09/98	1486721080	**816852**	690 462	AL
2.1 TD	D	2088	P8C		03/96 ▸ 09/98	1486721080	**816852**	690 462	AL
ULYSSE (98>2002)									
1.8 ie	E	1761	LFW		10/98 ▸ 08/02	1486721080	**816852**	690 462	AL
2.0 ie 16V	E	1997	EW10J4/L4		10/98 ▸ 08/02	1486721080	**816852**	690 462	AL
2.0 ie, 2.0 ie 16V, 2.0 ie Turbo	E	1998	RFU, RFV, RGX		10/98 ▸ 08/02	1486721080	**816852**	690 462	AL
1.9 TD	D	1905	XUD9TEF/K, XUD9TEF/L3		10/98 ▸ 08/02	1486721080	**816852**	690 462	AL
2.0 JTD, 2.0 JTD 16V	D	1997	DW10ATED4, RHZ		10/99 ▸ 08/02	1486721080	**816852**	690 462	AL
2.1 TD	D	2088	P8C		10/98 ▸ 08/02	1486721080	**816852**	690 462	AL
ULYSSE (2002>)									
2.0 i 16V	E	1997	EW10J4/L4	R134	09/02 ▸ 07/06	1489398080	**817579**	560 450	AL
3.0 i V6 24V	E	2946	ES9J4S/L4	R134	09/02 ▸ 07/06	1489257080	**817668**	712 364	AL
2.0 JTD 16V	D	1997	DW10ATED4	R134	09/02 ▸ 07/06	1489398080	**817579**	560 450	AL
2.0 JTD 16V	D	1997	DW10UTED4		04/06 ▸ 07/10	1400836980	•**814366**	590 361	AL
2.2 JTD 16V	D	2179	DW12ATED4/L4	R134	09/02 ▸ 07/06	1489398080	**817579**	560 450	AL
2.2 JTD 16V	D	2179	DW12BTED4		01/08 ▸	1401113180	**814065**	678 355	AL
500 NUOVA (2007>)									
0.9 TwinAir 85	E	875	312A2000		09/10 ▸ 06/12	51786211	**814155**	510 370	AL
1.2 MPi	E	1242	169A4.000		07/07 ▸	51786211	**814155**	510 370	AL
1.3 MJTD 16V	D	1248	169A1.000		07/07 ▸	51786211	**814155**	510 370	AL
1.4 MPi 16V	E	1368	169A3.000		07/07 ▸	51786211	**814155**	510 370	AL
FIAT									
DOBLO (2000>2003)									
1.2 i	E	1242	223A5.000		10/00 ▸ 12/03	46821270	**818017**	560 309	AL
DOBLO (2004>2005)									
1.3 MTJ 16V	D	1248	188A9.000		01/04 ▸	46821270	**818017**	560 309	AL
1.9 JTD	D	1910	223A7.000		09/05 ▸ 12/05	46821270	**818017**	560 309	AL
DOBLO II (2006>)									
1.3 MJTD 16V	D	1248	199A2.000,223A9.000	R134	01/06 ▸	46820833	**818021**	560 309	AL

• **New** Nouveau **Neu** Nuevo **Novo** Nuovo **Nieuw** Nowi **Новый** Novy **Nou** Yeni **Νέους**

⏭ **Multi-product Crosslist on section 1** Cross List Multi-produits, Section 1
Crossliste siehe Kapitel 1 Crosslist Multiproducto en la sección 1
Lista Multi-produto na secção 1 Cross-list Multi prodotto nella sezione 1
Rubriek 1 : Cross list "alle produkten" Kombinovaný převodník v sekci 1
Crosslist multi-produse, secţie 1 **Çoklu ürün çapraz listesi bölüm 1 tedir**
Αντιστοιχίες προϊόντων στο κεφάλαιο 1

		CC				OE	Valeo	DIM	TECH
FIAT (.../...)									
DOBLO II (2006>) (.../...)									
1.9 MJTD 8V	D	1910	186A9.000,223B2.000 223B1.000	R134	01/06 ▸	46820833	**818021**	560 309	AL
DOBLO CARGO (2000>2003)									
1.9 JTD	D	1910	182B9.000		10/01 ▸ 12/03	46821270	**818017**	560 309	AL
DOBLO CARGO (2004>2005)									
1.3 MTJ 16V	D	1248	188A9.000		01/04 ▸	46821270	**818017**	560 309	AL
1.9 JTD	D	1910	182B9.000, 223A7.000		01/04 ▸	46821270	**818017**	560 309	AL
DOBLO CARGO II (2006>)									
1.3 MJTD	D	1248	199A2.000/223A9.000	R134	01/06 ▸	46820833	**818021**	560 309	AL
1.9 MJTD	D	1910	223B2.000,223B1.000	R134	01/06 ▸	46820833	**818021**	560 309	AL
DUCATO (94>2001)									
2.0, 2.0 i	E	1998	XU10Z2U/W2, XU10J2U/W2		02/94 ▸ 12/01	1312857080	**818191**	506 349	AL
1.9 D, 1.9 TD	D	1905	XUD9A/K, XUD9TEF/W3		06/98 ▸ 12/01	1312857080	**818191**	506 349	AL
1.9 D, 1.9 TD	D	1929	230A2.000, 230A3.000 230A4.000		02/94 ▸ 12/01	1312857080	**818191**	506 349	AL
2.5 D, 2.5 TD	D	2499	8140-47/47R, 8140-67		02/94 ▸ 12/01	1312857080	**818191**	506 349	AL
2.8 D, 2.8 JTD, 2.8 TDi	D	2798	8140-43/S, 8140-63		01/98 ▸ 12/01	1312857080	**818191**	506 349	AL
DUCATO (2002>2006)									
2.0 i ▸7126575	E	1998	RFL		01/02 ▸ 09/02	1312857080	**818191**	506 349	AL
2.0 i ▸7126575	E	1998	RFL		04/02 ▸ 09/04	1340166080	**818018**	516 322	AL
2.0 JTD ▸7126575	D	1997	RHV		01/02 ▸ 09/02	1312857080	**818191**	506 349	AL
2.0 JTD ▸7126575	D	1997	RHV		04/02 ▸ 09/04	1340166080	**818018**	516 322	AL
2.3 JTD ▸7126575	D	2286	FIAE0481C		01/02 ▸ 09/02	1312857080	**818191**	506 349	AL
2.3 JTD ▸7126575	D	2286	FIAE0481C		04/02 ▸ 09/04	1340166080	**818018**	516 322	AL
2.8 JTD, 2.8 TD ▸7126575	D	2798	8140-43, 8140-43S		01/02 ▸ 09/02	1312857080	**818191**	506 349	AL
2.8 JTD, 2.8 TD ▸7126575	D	2798	8140-43, 8140-43S		04/02 ▸ 09/04	1340166080	**818018**	516 322	AL
DUCATO (2006>)									
3.0 GNV 140	F	2999	F1CE0441A		12/08 ▸	1361236080	**814085**	710 375	AL
2.2 MJTD	D	2198	4HV		07/06 ▸	1344098080	**814085**	710 375	AL
2.3 MJTD	D	2287	F1AE0481D		07/06 ▸	1361236080	**814085**	710 375	AL
3.0 MJTD	D	2999	F1CE0481D		07/06 ▸	1361236080	**814085**	710 375	AL
FIORINO (2008>)									
1.4 i	E	1360	KFV	R134	12/07 ▸	55700406	**818193**	552 333	AL
1.3 MJTD 16V	D	1248	199A2.000	R134	12/07 ▸	55700406	**818193**	552 333	AL
SCUDO (95>2003)									
1.6 i	E	1581	220A2.000		07/95 ▸ 12/03	1486721080	**816852**	690 462	AL
2.0 i 16V	E	1997	EW10J4/L4		09/00 ▸ 12/03	1486721080	**816852**	690 462	AL
1.9 D	D	1868	DW8/W3, DW8B/L4		07/96 ▸ 12/03	1486721080	**816852**	690 462	AL
1.9 D, 1.9 TD	D	1905	XUD9A/K, XUD9TEF/K XUD9TEF/L3, XUD9TEF/W3		07/95 ▸ 12/03	1486721080	**816852**	690 462	AL
2.0 JTD, 2.0 JTD 16V	D	1997	DW10ATED4, RHX, RHZ		02/00 ▸ 12/03	1486721080	**816852**	690 462	AL
SCUDO (2004>2006)									
2.0 16V	E	1997	EW10J4/L4		01/04 ▸ 12/06	1486721080	**816852**	690 462	AL

Valeo recommends replacing the receiver drier with the condenser
Pensez à changer la bouteille déshydratante avec le condenseur
Denken Sie daran, beim Wechsel des Kondensators auch den Trockner zu erneuern
Piense en la sustitución del filtro deshidratante con el condensador
A Valeo recomenda substituir o filtro desidratante com o condensador
Ricordatevi di sostituire il filtro disidratatore insieme al condensatore
Bij de vervanging van de condensor, vervang tevens de filter-droger

Valeo zaleca wymianę filtra osuszacza wraz ze skraplaczem
Рекомендируем замену осушителя вместо с конденсором
Spolu s kondenzátorem je nutné vyměnit také vysoušeč
Nu uitați sa schimbați uscatorul cu condensatorul
Kondenser değişimlerinde nem alıcının da değiştirilmesi gerektiğini dikkate alınız
Πρέπει να αντικαταστήσετε το φίλτρο υγρού μαζί με το συμπυκνωτή

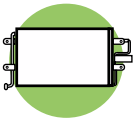

		CC				OE	Valeo	DIM	TECH
FIAT (.../...)									
SCUDO (2004>2006) (.../...)									
1.9 D	D	1868	DW8B/L4		01/04 ▸ 12/06	1486721080	**816852**	690 462	AL
2.0 JTD, 2.0 JTD 16V	D	1997	DW10ATED4, DW10BTED/L4 DW10BTED+L4		01/04 ▸ 12/06	1486721080	**816852**	690 462	AL
SCUDO (2007>)									
1.6 MJTD 16V	D	1560	DV6UTED4		01/07 ▸	1440143080	**•814366**	590 361	AL
2.0 MJTD 16V,2.0 Mj 16V	D	1997	DW10BTED4,DW10BTED4/F DW10UTED4		01/07 ▸	1440143080	**•814366**	590 361	AL
FORD									
C-MAX									
2.0 TDCi	D		N13B16K0, 55B3000 N57D3001		08/10 ▸	8V6119710FA	**814197**	587 470	AL
COUGAR									
2.0 i	E	1998	EDB		05/99 ▸ 02/01	4144369	**817232**	588 391	AL
2.5 i V6	E	2544	LCB		09/98 ▸ 06/00	4144369	**817232**	588 391	AL
FIESTA (2002>2005)									
1.2 i 16V	E	1242	1.25 ZETEC-S 1.25 ZETEC-S/DU		02/03 ▸ 09/05	1254203	**817664**	538 361	AL
1.3 i	E	1299	BAJA, DURATEC 1.3 EFI		03/02 ▸ 09/05	1254203	**817664**	538 361	AL
1.4 i 16V	E	1388	FXJA		03/02 ▸ 09/05	1146195	**817664**	538 361	AL
1.6 i 16V	E	1596	ZETEC-S 1.6 EFI		03/02 ▸ 09/05	1254203	**817664**	538 361	AL
2.0 i 16V	E	1999	NAJB		01/05 ▸ 09/05	1384859	**814083**	578 361	AL
1.4 TDCi	D	1399	F6JA		03/02 ▸ 09/05	1146195	**817664**	538 361	AL
1.6 TDCi 16V	D	1560	HHDA/B		11/04 ▸ 09/05	1254203	**817664**	538 361	AL
FIESTA (2005>)									
1.3 i	E	1299	A9A/B, BAJA		10/05 ▸	1363775	**818195**	531 333	AL
1.4 i 16V	E	1388	ASDA/B		10/05 ▸	1363775	**818195**	531 333	AL
1.6 i 16V	E	1596	HWDA/B		10/05 ▸	1363775	**818195**	531 333	AL
2.0 i 16V	E	1999	NAJB		10/05 ▸	1363775	**818195**	531 333	AL
1.4 TDCi	D	1399	DURATQ14		10/05 ▸	1363775	**818195**	531 333	AL
1.6 TDCi 16V	D	1560	HHDA/B		10/05 ▸	1334653	**818194**	560 381	AL
FOCUS (98>2001)									
1.4 i	E	1388	FXDA, FXDC		10/98 ▸ 10/01	1086534	**817493**	628 361	AL
1.6 i	E	1596	FYDA, FYDC		10/98 ▸ 10/01	1086534	**817493**	628 361	AL
1.8 i	E	1796	EYDA, EYDC		10/98 ▸ 10/01	1136949	**817493**	628 361	AL
2.0 i	E	1988	EDDA, EDDC		10/98 ▸ 10/01	1136949	**817493**	628 361	AL
1.8 TDCi, 1.8 TDi	D	1753	FFDA,C9DA/B/C,C9DA/B/C BHDA/B		10/98 ▸ 10/01	1136949	**817493**	628 361	AL
FOCUS (2001>2003)									
1.4 i 16V	E	1388	FXDA, FXDC		11/01 ▸ 12/02	1250627	**817493**	628 361	AL
1.6 i 16V	E	1596	FYDA, FYDC		11/01 ▸ 12/02	1250627	**817493**	628 361	AL
1.8 i 16V	E	1796	EYDA, EYDC		11/01 ▸ 12/02	1250627	**817493**	628 361	AL
2.0 i 16V, 2.0 i Turbo 16V	E	1988	D20RS, EDDA, EDDC ZH20EST		11/01 ▸ 12/02	1250627	**817493**	628 361	AL
1.8 TDCi, 1.8 TDdi	D	1753	FFDA,C9DA/B/C,C9DA/B/C BHDA/B		11/01 ▸ 12/02	1250627	**817493**	628 361	AL
FOCUS (2004>)									
1.4 i 16V	E	1388	ASDA/B		09/04 ▸	1335552	**818046**	628 374	AL
1.6 Ti-VCT 16V, 1.6 i 16V	E	1596	HXDA,HWDA/B,16LSEZ		09/04 ▸	1335552	**818046**	628 374	AL
1.8 i CNG 16V **1.8 i Flexifuel 16V**	F	1798	DURA18CNG, DURA18FLEX		11/04 ▸	1335552	**818046**	628 374	AL

• **New** Nouveau **Neu** Nuevo **Novo** Nuovo **Nieuw** Nowi **Новый** Novy **Nou** Yeni **Νέους**

⏭ **Multi-product Crosslist on section 1** Cross List Multi-produits, Section 1
Crossliste siehe Kapitel 1 Crosslist Multiproducto en la sección 1
Lista Multi-produto na secção 1 Cross-list Multi prodotto nella sezione 1
Rubriek 1 : Cross list "alle produkten" Kombinovaný převodník v sekci 1
Crosslist multi-produse, secţie 1 **Çoklu ürün çapraz listesi bölüm 1 tedir**
Αντιστοιχίες προϊόντων στο κεφάλαιο 1

		CC				OE	Valeo	DIM	TECH
FORD (.../...)									
FOCUS (2004>) (.../...)									
2.0 i 16V	E	1999	AODA/B		11/04 ▸	1335552	**818046**	628 374	AL
2.5 i 20V	E	2521	2.5 DURATEC 220		10/05 ▸	1335552	**818046**	628 374	AL
1.6 TDCi 16V, 1.6 TDCi DPF 16V	D	1560	D16FAP, HHDA/B		09/04 ▸	1335552	**818046**	628 374	AL
1.8 TDCi	D	1753	KKDA		11/04 ▸	1335552	**818046**	628 374	AL
2.0 TDCi 16V, 2.0 TDCi DPF 16V	D	1997	D20TDCI, D20TDCIFAP		09/04 ▸	1335552	**818046**	628 374	AL
FOCUS									
2.0 TDCi	D	1997	N13B16U0, N55B30 N47D20T1		08/10 ▸	8V6119710FA	**814197**	587 470	AL
FOCUS C-MAX 2003>2007)									
1.6 Ti-VCT 16V, 1.6 i 16V	E	1596	ZH16-E4, ZH16TIVCT		10/03 ▸ 02/07	1335552	**818046**	628 374	AL
1.8 i 16V	E	1798	ZH18		10/03 ▸ 02/07	1234248	**818046**	628 374	AL
2.0 i 16V	E	1999	ZH20-E4		10/03 ▸ 02/07	1234248	**818046**	628 374	AL
1.6 TDCi 16V	D	1560	D16TDCI		10/03 ▸ 02/07	1335552	**818046**	628 374	AL
2.0 TDCi 16V	D	1997	D20TDCI		10/03 ▸ 02/07	1234248	**818046**	628 374	AL
FOCUS C-MAX (2007>)									
1.6 i 16V	E	1596	1.6 ZETEC-S		03/07 ▸ 08/10	1516838	**818046**	628 374	AL
1.8 i 16V	E	1798	1.8 DURATEC-HE		03/07 ▸ 08/10	1516838	**818046**	628 374	AL
2.0 i GPL 16V	F	1999	2.0DC-HE BIFUEL		03/07 ▸ 08/10	1516838	**818046**	628 374	AL
2.0 i 16V	E	1999	AODA/B		03/07 ▸ 08/10	1516838	**818046**	628 374	AL
1.6 TDCi 16V	D	1560	1.6 DQ TDCI,G8DB/F		03/07 ▸ 08/10	1516838	**818046**	628 374	AL
1.8 TDCi	D	1753	1.8 TC LYNX		03/07 ▸ 08/10	1516838	**818046**	628 374	AL
2.0 TDCi 16V	D	1997	2.0 DURATORQ 2.0 DURATORQ/F		02/07 ▸ 08/10	1516838	**818046**	628 374	AL
FUSION (2002>2005)									
1.25 i 16V	E	1242	1.25 ZETEC-S/DU		08/04 ▸ 09/05	1254203	**817664**	538 361	AL
1.4 i 16V	E	1388	FXJA		06/02 ▸ 09/05	1146195	**817664**	538 361	AL
1.6 i 16V	E	1596	ZETEC-S 1.6 EFI		06/02 ▸ 09/05	1146195	**817664**	538 361	AL
1.4 TDCi	D	1399	F6JA		06/02 ▸ 09/05	1146195	**817664**	538 361	AL
1.6 TDCi 16V	D	1560	HHDA/B		11/04 ▸ 09/05	1254203	**817664**	538 361	AL
FUSION (2005>)									
1.2 i 16V	E	1242	DURAZET125		10/05 ▸	1363775	**818195**	531 333	AL
1.2 i 16V	E	1242	1.25 ZETEC-S/DU		01/06 ▸	1384859	**814083**	578 361	AL
1.4 i 16V	E	1388	ASDA/B		10/05 ▸	1363775	**818195**	531 333	AL
1.4 i 16V	E	1388	ZETEC-S 1.4 EFI		10/05 ▸ 07/10	1384859	**814083**	578 361	AL
1.6 i 16V	E	1596	HWDA/B		10/05 ▸	1363775	**818195**	531 333	AL
1.6 i 16V	E	1596	ZETEC-S 1.6 EFI		01/06 ▸ 07/10	1384859	**814083**	578 361	AL
1.4 TDCi	D	1399	DURATQ14		10/05 ▸	1363775	**818195**	531 333	AL
1.4 TDCi	D	1399	F6JC		01/06 ▸	1384859	**814083**	578 361	AL
1.6 TDCi 16V	D	1560	HHDA/B		10/05 ▸	1334196	**818194**	560 381	AL
GALAXY (95>2000)									
2.0 i	E	1998	NSE		09/96 ▸ 03/00	1029057	**816948**	544 366	AL
2.8 i VR6	E	2792	PW		09/96 ▸ 03/00	1029057	**816948**	544 366	AL
1.9 TDi	D	1896	MF		09/96 ▸ 03/00	1029057	**816948**	544 366	AL
GALAXY (2000>)									
2.0 i	E	1998	NSE	R134	01/01 ▸ 10/01	1108838	**818004**	554 361	AL
2.3 i	E	2295	Y5, Y5B	R134	04/00 ▸ 10/01	1108838	**818004**	554 361	AL
2.8 i V6	E	2792	PW-204	R134	04/00 ▸ 10/01	1108838	**818004**	554 361	AL
1.9 TDi	D	1896	AUY1, MF	R134	04/00 ▸ 10/01	1108838	**818004**	554 361	AL
GALAXY (2006>)									
2.0 i 16V	E	1999	2.0L DURATEC-HE		04/06 ▸ 03/10	1437112	**814184**	587 470	AL

Valeo recommends replacing the receiver drier with the condenser
Pensez à changer la bouteille déshydratante avec le condenseur
Denken Sie daran, beim Wechsel des Kondensators auch den Trockner zu erneuern
Piense en la sustitución del filtro deshidratante con el condensador
A Valeo recomenda substituir o filtro desidratante com o condensador
Ricordatevi di sostituire il filtro disidratatore insieme al condensatore
Bij de vervanging van de condensor, vervang tevens de filter-droger

Valeo zaleca wymianę filtra osuszacza wraz ze skraplaczem
Рекомендируем замену осушителя вместо с конденсором
Spolu s kondenzátorem je nutné vyměnit také vysoušeč
Nu uitați sa schimbați uscatorul cu condensatorul
Kondenser değişimlerinde nem alıcının da değiştirilmesi gerektiğini dikkate alınız
Πρέπει να αντικαταστήσετε το φίλτρο υγρού μαζί με το συμπυκνωτή

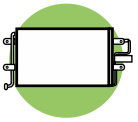

		CC				OE	Valeo	DIM	TECH
							FORD	(.../...)	
GALAXY (2006>) (.../...)									
2.5 i 20V	E	2521	2.5 DURATEC		04/06 ▸ 04/10	1437112	**814184**	587 470	AL
1.8 TDCi	D	1753	1.8 TC LYNX,1.8 TCD LYNX		04/06 ▸ 04/10	1437112	**814184**	587 470	AL
2.0 TDCi 16V	D	1997	2.0 DURATORQ 2.0TDCIDURATORQ		04/06 ▸ 03/10	1437112	**814184**	587 470	AL
KA									
1.0 i	E	999	C4		10/96 ▸ 04/99	1061104	**817225**	448 381	AL
1.3 i	E	1299	J4D/K, J4M, JJB/D/F		09/96 ▸ 10/02	1061104	**817225**	448 381	AL
1.6 i	E	1599	CDA/B/C	N/ R134	02/03 ▸ 11/08	1231780	**817225**	400 375	AL
KUGA									
2.5 T 20V	E	2521	2.5 DC-ST		10/08 ▸ 04/10	1522067	**814185**	587 470	AL
2.0 TDCi 136	D	1997	2.0 DURATORQ/F		04/08 ▸ 03/10	1522067	**814185**	587 470	AL
MONDEO (96>2000)									
1.6 i	E	1597	L1, L1J-90		03/99 ▸ 08/00	4144369	**817232**	588 391	AL
1.8 i	E	1796	RKJ		08/96 ▸ 08/00	4144369	**817232**	588 391	AL
2.0 i	E	1998	NGA		08/96 ▸ 08/00	4144369	**817232**	588 391	AL
2.5 i V6	E	2495	SE		04/99 ▸ 08/00	4144369	**817232**	588 391	AL
2.5 i V6	E	2544	SEA		08/96 ▸ 08/00	4144369	**817232**	588 391	AL
1.8 TD	D	1753	RFN		08/96 ▸ 08/00	4144369	**817232**	588 391	AL
MONDEO (2000>2002)									
1.8 i 16V	E	1798	CGBA, CGBB, CHBA, CHBB		10/00 ▸ 11/01	1232914	**817567**	669 361	AL
1.8 i 16V	E	1798	CGBA, CGBB, CHBA, CHBB		12/01 ▸	1152429	**817657**	628 361	AL
2.0 i 16V	E	1999	CJBA, CJBB		10/00 ▸ 11/01	1142333	**817567**	669 361	AL
2.0 i 16V	E	1999	CJBA, CJBB		12/01 ▸	1311098	**817657**	628 361	AL
2.5 i V6 24V	E	2495	LCBD		10/00 ▸ 11/01	1142333	**817567**	669 361	AL
2.5 i V6 24V	E	2495	LCBD		12/01 ▸	1152429	**817657**	628 361	AL
3.0 i V6 24V	E	2967	MP30		03/02 ▸	1232915	**817657**	628 361	AL
2.0 DI 16V, 2.0 TDCi 16V 2.0 TDDI 16V	D	1998	D5BA, D6BA, PD		10/00 ▸ 11/01	1142333	**817567**	669 361	AL
2.0 DI 16V, 2.0 TDCi 16V 2.0 TDDI 16V	D	1998	D5BA, D6BA, PD		12/01 ▸	1311098	**817657**	628 361	AL
MONDEO (2003>2005)									
1.8 SCi 16V	E	1798	ZH18		06/03 ▸ 04/05	1311098	**817657**	628 361	AL
2.5 i V6 24V	E	2495	MP25N		06/03 ▸ 04/05	1311098	**817657**	628 361	AL
2.0 TDDi	D	1998	D5BA		06/03 ▸ 04/05	1311098	**817657**	628 361	AL
1.8 i 16V	E	1798	DURA18		05/05 ▸ 05/07	1348012	**817657**	628 361	AL
2.0 i 16V	E	1999	AODA/B		05/05 ▸ 05/07	1348012	**817657**	628 361	AL
3.0 i V6 24V	E	2967	DURA30		05/05 ▸ 05/07	1348012	**817657**	628 361	AL
MONDEO III (2007>)									
1.6 Ti-VCT 16V	E	1596	1.6 ZETEC-S	+/ R134	06/07 ▸	1481851	**•814360**	577 466	AL
2.0 16V	E	1999	AODA/B	+/ R134	06/07 ▸	1481851	**•814360**	577 466	AL
2.0 203 16V	E	1999	2.0DC ECOBOOST		03/10 ▸	1437112	**814184**	587 470	AL
2.3 16V	E	2261	2.3 DURATEC HE	+/ R134	09/07 ▸	1481851	**•814360**	577 466	AL
2.5 20V	E	2521	2.5 DURATEC		06/07 ▸	1437112	**814184**	587 470	AL
1.8 TDCi	D	1753	1.8 TC LYNX,1.8 TCD LYNX	+/ R134	06/07 ▸	1481851	**•814360**	577 466	AL
2.0 TDCi	D	1997	2.0 DURATORQ/F 2.0TDCIDURATORQ	+/ R134	06/07 ▸	1481851	**•814360**	577 466	AL
2.0 TDCi 163	D	1997	2.0DQ DOHC		03/10 ▸	1437112	**814184**	587 470	AL
2.2 TDCi	D	2179	2.2 DQ TDCI		07/08 ▸	1437112	**814184**	587 470	AL
SCORPIO (94>98)									
2.0 i 16V	E	1997	N3A		10/94 ▸ 07/98	7286932	**814289**	552 388	AL
2.0 i	E	1998	NSD,NSE		10/94 ▸ 07/98	7286932	**814289**	552 388	AL

• **New** Nouveau **Neu** Nuevo **Novo** Nuovo **Nieuw** Nowi **Новый** Novy **Nou** Yeni **Νέους**

⏭ **Multi-product Crosslist on section 1** Cross List Multi-produits, Section 1
Crossliste siehe Kapitel 1 Crosslist Multiproducto en la sección 1
Lista Multi-produto na secção 1 Cross-list Multi prodotto nella sezione 1
Rubriek 1 : Cross list "alle produkten" Kombinovaný převodník v sekci 1
Crosslist multi-produse, secţie 1 **Çoklu ürün çapraz listesi bölüm 1 tedir**
Αντιστοιχίες προϊόντων στο κεφάλαιο 1

		CC				OE	Valeo	DIM	TECH
FORD (.../...)									
SCORPIO (94>98) (.../...)									
2.3 i 16V	E	2295	Y5A		05/96 ▸ 07/98	7286932	**814289**	552 388	AL
2.9 i	E	2933	BRF		10/94 ▸ 08/96	7286932	**814289**	552 388	AL
2.9 i 24V	E	2935	B0B		10/94 ▸ 07/98	7286932	**814289**	552 388	AL
2.5 TD	D	2500	SCC,SCD		10/94 ▸ 07/98	7286932	**814289**	552 388	AL
S-MAX (2006>2010)									
1.8 TDCi	D	1753	1.8 TC LYNX,1.8 TCD LYNX		04/06 ▸ 06/10	1405365	**814184**	587 470	AL
2.0 TDCi 16V	D	1997	2.0 DURATORQ		04/06 ▸ 06/10	1437112	**814184**	587 470	AL
2.0 TDCi 16V	D	1998	2.0DI DURATORQ		04/06 ▸	1437112	**814184**	587 470	AL
2.0 i 16V	E	1999	2.0L DURATEC-HE		04/06 ▸ 06/10	1437112	**814184**	587 470	AL
2.0 i 16V	F	1999	2.0L DURATEC		03/08 ▸ 06/10	1437112	**814184**	587 470	AL
2.2 TDCi 16V	D	2179	2.2 DQ TDCI		07/08 ▸ 06/10	1437112	**814184**	587 470	AL
2.3 i Turbo 16V	E	2261	2.3 DURATEC HE		03/07 ▸ 06/10	1437112	**814184**	587 470	AL
2.5 i Turbo 20V	E	2521	2.5 DURATEC		04/06 ▸ 06/10	1405365	**814184**	587 470	AL
S-MAX (2010>)									
2.0 FFV 145 16V	F	1999	2.0L DURATEC		07/10 ▸	1437112	**814184**	587 470	AL
2.0 SCTi 145 16V	E	1999	2.0L DURATEC-HE		07/10 ▸	1437112	**814184**	587 470	AL
2.0 TDCi	D	1997	2.0DQ CR TC 136 2.0DQ DOHC 163		07/10 ▸	1437112	**814184**	587 470	AL
STREETKA									
1.6 i	E	1599	CDA/B/C	R134	11/02 ▸ 12/05	1334283	**817225**	448 381	AL
FORD									
TRANSIT (2000>)									
2.3 i GPL 16V	G	2295	E5FC		01/00 ▸	4041973	**818050**	821 354	AL
2.3 i 16V	E	2295	E5FA		01/00 ▸	4471423	**818050**	821 354	AL
2.0 TDci, 2.0 TDdi	D	1998	20TDCI-125, 20TDI-85 ABFA, D3FA-E3		08/00 ▸	4471423	**818050**	821 354	AL
2.4 TDCi, 2.4 TDI, 2.4 TDdi	D	2402	D2FA, D4FA, DOFE, F4FA FXFA, H9FA		01/00 ▸	4471423	**818050**	821 354	AL
TRANSIT (2006>)									
2.2 TDCi	D	2198	P8FA, QVFA, QWFA, QWFB		04/06 ▸	1383318	**814087**	568 391	AL
2.3 i 16V	E	2261	2.3 DURATEC HE		04/06 ▸	1383318	**814087**	725 388	AL
2.4 TDCi	D	2402	H9FC, HPFB, JXFA, JXFB PHFA, PHFB		04/06 ▸	1383318	**814087**	568 391	AL
HONDA									
ACCORD COUPE (91>93)									
2.0 i	E	1997	F20A7		07/91 ▸ 08/93	80100SM1A23	**814276**	605 310	AL
ACCORD COUPE (93>97)									
2.0 i	E	1997	F20B3, F20Z2		03/93 ▸ 01/96	80110SV1A11	**814302**	563 318	AL
2.3 i SR	E	2259	H23A3		03/93 ▸ 01/96	80110SV1A11	**814302**	563 318	AL
2.2 i ES	E	2156	F22B5, F22B5		03/93 ▸ 01/96	80110SV1A11	**814302**	563 318	AL
ACCORD COUPE (97>2002)									
2.0 i	E	1997	F20B5		06/98 ▸ 06/02	80100S84A00	**817783**	590 358	AL
ACCORD (93>95)									
1.8 i	E	1849	F18A3	N	07/93 ▸ 06/95	80100SN7E01	**817781**	605 310	AL
2.0 i	E	1997	F20Z1,F20Z2	N	03/93 ▸ 06/95	80100SN7E01	**817781**	605 310	AL
2.0 i	E	1997	F20Z1,F20Z2		07/93 ▸ 06/95	80100SM1A23	**814276**	605 310	AL
2.3 i	E	2259	H23A3		07/93 ▸ 06/95	80100SM1A23	**814276**	605 310	AL

Valeo recommends replacing the receiver drier with the condenser
Pensez à changer la bouteille déshydratante avec le condenseur
Denken Sie daran, beim Wechsel des Kondensators auch den Trockner zu erneuern
Piense en la sustitución del filtro deshidratante con el condensador
A Valeo recomenda substituir o filtro desidratante com o condensador
Ricordatevi di sostituire il filtro disidratatore insieme al condensatore
Bij de vervanging van de condensor, vervang tevens de filter-droger
Valeo zaleca wymianę filtra osuszacza wraz ze skraplaczem
Рекомендируем замену осушителя вместо с конденсором
Spolu s kondenzátorem je nutné vyměnit také vysoušeč
Nu uitați sa schimbați uscatorul cu condensatorul
Kondenser değişimlerinde nem alıcının da değiştirilmesi gerektiğini dikkate alınız
Πρέπει να αντικαταστήσετε το φίλτρο υγρού μαζί με το συμπυκνωτή

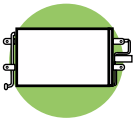

		CC				OE	Valeo	DIM	TECH
HONDA									
ACCORD (93>95) (.../...)									
2.3 i	E	2259	H23A3	N	07/93 ▸ 06/95	80100SN7E01	**817781**	605 310	AL
ACCORD (95>98)									
1.8 i	E	1849	F18A3,F18A4	N	07/95 ▸ 08/98	80100SN7E01	**817781**	605 310	AL
2.0 i	E	1997	F20Z1	N	07/95 ▸ 08/98	80100SN7E01	**817781**	605 310	AL
2.2 i	E	2156	F22Z2	N	07/95 ▸ 08/98	80100SN7E01	**817781**	605 310	AL
ACCORD (98>2003)									
1.6 i	E	1590	D16B6,D16B7		09/98 ▸ 01/03	80110S1AG01	**817783**	590 358	AL
1.8 i	E	1849	F18B2,F18B4		09/98 ▸ 01/03	80110S1AG01	**817783**	590 358	AL
2.0 i	E	1997	F20B6		09/98 ▸ 01/03	80110S1AG01	**817783**	590 358	AL
2.2 i	E	2157	H22A7		09/98 ▸ 01/03	80110S1AG02	**817783**	590 358	AL
2.3 i	E	2254	F23Z5		11/00 ▸ 01/03	80110S1AG02	**817783**	590 358	AL
ACCORD (2003>2008)									
2.0 i	E	1998	K20A6	+/ R134	02/03 ▸ 05/08	80110SEA003	**814242**	656 358	AL
2.2 i-CDTi 16V	D	2204	N22A1	+/ R134	02/04 ▸ 05/08	80101SEFE11	**814159**	656 358	AL
2.4 i	E	2354	K24A3	+/ R134	02/03 ▸ 05/08	80110SEA003	**814242**	656 358	AL
CIVIC (EJ/EK)									
1.4 i	E	1396	D14A3,D14Z1,D14A4,D14Z2		10/95 ▸ 03/01	80110SO1A11	**•814326**	335 365	AL
1.5 i	E	1493	D15Z6		10/95 ▸ 03/01	80110SO1A11	**•814326**	335 365	AL
1.6 i	E	1590	D16Y5,D16W4		10/95 ▸ 03/01	80110SO1A11	**•814326**	335 365	AL
2.0 i	E				10/95 ▸ 03/01	80110SO1A11	**•814326**	335 365	AL
CIVIC (EP) (2001>)									
1.3 i	E	1339	LDA1-MF3	R134	01/04 ▸ 06/05	80110S6DG01	**817780**	610 348	AL
1.4 i 16V	E	1396	D14Z5		04/01 ▸ 06/06	80110S5A003	**814243**	610 358	AL
1.4 i,1.4 i 16V,1.4 i Sport 16V	E	1396	D14Z5,D14Z6,LDA1-MF3	R134	04/01 ▸ 06/06	80110S6DG01	**817780**	610 348	AL
1.6 i VTEC 16V	E	1590	D16W7		04/01 ▸ 06/06	80110S5A003	**814243**	610 358	AL
1.6 i VTEC 16V	E	1590	D16V1,D16W7	R134	04/01 ▸ 06/06	80110S6DG01	**817780**	610 348	AL
1.7 i 16V,1.7 i VTEC 16V	E	1668	D17A8,D17A9		04/01 ▸ 06/06	80110S5A003	**814243**	610 358	AL
2.0 i VTEC 16V	E	1998	K20A2,K20A3		09/01 ▸ 06/06	80110S5A003	**814243**	610 358	AL
CIVIC (FK/FD) (2006>)									
1.3 i-VTEC IMA,1.4 i	E	1339	L13A7-1-2,LDA2-MF5	+/ R134	01/06 ▸	80110SNBA41	**814217**	673 383	AL
1.4 i-VTEC	E	1339	L13A7-3	R134	12/08 ▸	80110SMGE02	**•814333**	599 323	AL
1.8 i 16V,1.8 i-VTEC 16V	E	1799	R18A1	R134	01/06 ▸	80110SMGE02	**•814333**	599 323	AL
1.8 i 16V	E	1799	R18A1	+/ R134	01/06 ▸	80110SNBA41	**814217**	673 383	AL
2.0 i-VTEC 16V	E	1998	K20Z4	R134	01/07 ▸	80110SMGE02	**•814333**	599 323	AL
2.2 i-CTDi 16V,2.2 iCDTi 16V	D	2204	N22A1,N22A2,N22A2/F	R134	01/06 ▸	80110SMGE02	**•814333**	599 323	AL
2.2 iCDTi 16V	D	2204	N22A1	+/ R134	01/06 ▸	80110SNBA41	**814217**	673 383	AL
CR-V (97>2002)									
2.0 i	E	1973	B20B,B20B3,B20Z1,B20Z3		01/97 ▸ 02/02	80110S10003	**818070**	563 318	AL
CR-V (2002>2006)									
2.0 i VTEC 16V	E	1998	K20A4	+/ R134	03/02 ▸ 12/06	80110S9A003	**814225**	650 343	AL
2.2 iCTDi 16V	D	2204	N22A1	+/ R134	03/05 ▸ 12/06	80110S9A003	**814225**	650 343	AL
CR-V (2006>2010)									
2.0 i	E	1997	R20A2	+/ R134	01/07 ▸	80110SWAA01	**814232**	406 378	AL
2.4 i	E	2354	K24A1	+/ R134	01/07 ▸	80110SWAA01	**814232**	406 378	AL
2.2	D	2204	N22A2	+/ R134	01/07 ▸	80110SWAA01	**814232**	406 378	AL
JAZZ (2002>)									
1.2 i	E	1243	L12A1	+/ R134	01/02 ▸ 10/08	80110SAA003	**814241**	335 388	AL
1.4 i	E	1339	L13A1	+/ R134	01/02 ▸ 10/08	80110SAA003	**814241**	335 388	AL
STREAM									
1.7 i VTEC 16V	E	1668	D17A2	+/ R134	03/01 ▸ 09/05	80100S7A013	**814267**	668 368	AL

• **New** Nouveau **Neu** Nuevo **Novo** Nuovo **Nieuw** Nowi **Новый** Novy **Nou** Yeni **Νέους**

⏭ **Multi-product Crosslist on section 1** Cross List Multi-produits, Section 1
Crossliste siehe Kapitel 1 Crosslist Multiproducto en la sección 1
Lista Multi-produto na secção 1 Cross-list Multi prodotto nella sezione 1
Rubriek 1 : Cross list "alle produkten" Kombinovaný převodník v sekci 1
Crosslist multi-produse, secţie 1 **Çoklu ürün çapraz listesi bölüm 1 tedir**
Αντιστοιχίες προϊόντων στο κεφάλαιο 1

		CC				OE	Valeo	DIM	TECH
HYUNDAI									
ACCENT (94>99)									
1.3 i	E	1341	G4EH62		04/95 ▸ 09/99	9760622051	**814255**	544 318	AL
1.5 i,1.5 i 12V	E	1495	G4EK-88,G4FK-99		07/94 ▸ 09/99	9760622051	**814255**	544 318	AL
ACCENT (2003>2004)									
1.6 i 16V	E	1599	G4ED	+/ R134	02/03 ▸ 12/06	976061E000	•**814350**	608 342	AL
ACCENT (2005>)									
1.4 i 16V	E	1399	G4EE	+/ R134	03/06 ▸	976061E000	•**814350**	608 342	AL
1.6 i 16V	E	1599	G4EB	+/ R134	12/05 ▸	976061E000	•**814350**	608 342	AL
COUPE (2002>)									
1.6 i 16V	E	1599	G4GRE2	+/ R134	01/02 ▸ 12/06	976062D000	**814264**	576 358	AL
2.0 i 16V	E	1975	G4GCG-141,G4GCG-E4	+/ R134	01/02 ▸ 12/06	976062D000	**814264**	576 358	AL
2.7 i V6 24V	E	2657	G6BA-G-167	+/ R134	01/02 ▸ 12/06	976062D000	**814264**	576 358	AL
COUPÉ FL (2006>)									
1.6 i 16V	E	1599	1.6L-ALPHA DOHC	+/ R134	09/06 ▸ 09/08	976062D000	**814264**	576 358	AL
2.0 i 16V	E	1975	2.0L-BETA	+/ R134	09/06 ▸ 09/08	976062D000	**814264**	576 358	AL
2.7 i V6 24V	E	2656	2.7L-DELTA	+/ R134	09/06 ▸ 09/08	976062D000	**814264**	576 358	AL
ELANTRA (2000>2007)									
1.6 i,1.6 i 16V	E	1599	G4EDG,G4GRE2	+/ R134	06/00 ▸ 01/07	976062D000	**814264**	576 358	AL
1.8 i	E	1796	G4GM-132	+/ R134	06/00 ▸ 08/06	976062D000	**814264**	576 358	AL
2.0 i,2.0 i 16V	E	1975	G4GCG-139,G4GCG-141 G4GCG-E4	+/ R134	06/00 ▸ 01/07	976062D000	**814264**	576 358	AL
2.0 CRDi 16V	D	1991	D4-EA	+/ R134	01/01 ▸ 01/07	976062D000	**814264**	576 358	AL
ELANTRA (2006>)									
2.0 i 16V	E	1975	2.0L-BETA	+/ R134	11/06 ▸	976062H000	•**814351**	563 396	AL
EXCEL (94>)									
1.3	E	1341	G4EH62		07/94 ▸ 09/99	9760622050	**814255**	544 318	AL
1.5 12V	E	1495	G4EK-88		07/94 ▸ 09/99	9760622051	**814255**	544 318	AL
GETZ (2002>2005)									
1.1 i 12V	E	1086	G4H46	+/ R134	09/02 ▸ 08/05	976061C200	•**814341**	499 324	AL
1.1 i 12V	E	1086	G4H46	+/ R134	09/02 ▸ 08/05	976061C100	•**818074**	499 344	AL
1.3 i 12V	E	1341	G4EH	+/ R134	09/02 ▸ 03/04	976061C200	•**814341**	499 324	AL
1.3 i 12V	E	1341	G4EH	+/ R134	09/02 ▸	976061C100	•**818074**	499 344	AL
1.6 i 16V	E	1599	G4GR	+/ R134	09/02 ▸ 12/03	976061C100	•**818074**	499 344	AL
GETZ (2005>2006)									
1.1 i 12V	E	1086	1.1L-EPSILON	+/ R134	09/05 ▸ 12/06	976061C200	•**814341**	499 324	AL
1.1 i 12V	E	1086	1.1L-EPSILON	+/ R134	09/05 ▸ 12/06	976061C000	•**818074**	499 344	AL
1.4 i 16V	E	1399	G4EE	+/ R134	09/05 ▸ 12/06	976061C100	•**818074**	499 344	AL
1.4 i 16V	E	1399	G4EE	+/ R134	09/05 ▸ 12/06	976061C200	•**814341**	499 324	AL
1.6 i 16V	E	1599	GAGRE	+/ R134	09/05 ▸ 12/06	976061C000	•**818074**	499 344	AL
1.5 CRDi 16V	D	1493	D4F;D4FA-G	+/ R134	09/05 ▸ 12/06	976061C000	•**818074**	499 344	AL
GETZ (2006>)									
1.1 i 12V	E	1086	1.1L-EPSILON	+/ R134	11/06 ▸ 07/09	976061C100	•**818074**	499 344	AL
1.4 i 16V	E	1399	1.4L-ALPHA	+/ R134	11/06 ▸ 07/09	976061C100	•**818074**	499 344	AL
1.6 i 16V	E	1599	1.6L-ALPHA DOHC	+/ R134	11/06 ▸ 07/09	976061C100	•**818074**	499 344	AL
GETZ (TB) (INDIA) (2007>)									
1.1 i 12V	E	1086	1.1L-EPSILON	+/ R134	01/07 ▸ 12/08	976061C100	•**818074**	499 344	AL
1.4 i 16V	E	1399	1.4L-ALPHA	+/ R134	01/07 ▸ 12/08	976061C200	•**814341**	499 324	AL
I10									
1.1 i 12V	E	1086	1.1L-EPSILON	+/ R134	12/07 ▸	976061C200	•**814341**	499 324	AL

Valeo recommends replacing the receiver drier with the condenser
Pensez à changer la bouteille déshydratante avec le condenseur
Denken Sie daran, beim Wechsel des Kondensators auch den Trockner zu erneuern
Piense en la sustitución del filtro deshidratante con el condensador
A Valeo recomenda substituir o filtro desidratante com o condensador
Ricordatevi di sostituire il filtro disidratatore insieme al condensatore
Bij de vervanging van de condensor, vervang tevens de filter-droger

Valeo zaleca wymianę filtra osuszacza wraz ze skraplaczem
Рекомендируем замену осушителя вместо с конденсором
Spolu s kondenzátorem je nutné vyměnit také vysoušeč
Nu uitați sa schimbați uscatorul cu condensatorul
Kondenser değişimlerinde nem alıcının da değiştirilmesi gerektiğini dikkate alınız
Πρέπει να αντικαταστήσετε το φίλτρο υγρού μαζί με το συμπυκνωτή

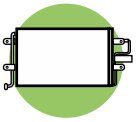

		CC				OE	Valeo	DIM	TECH
HYUNDAI (.../...)									
I10 (.../...)									
1.1 i 12V	E	1086	1.1L-EPSILON	+/ R134	12/07 ▸	976060X000	**•814354**	434 343	AL
1.2 16V	E	1248	1.2L-KAPPA	+/ R134	09/08 ▸	976060X000	**•814354**	434 343	AL
1.1 CRDi 12V	D	1120	1.1L-U	+/ R134	12/07 ▸	976060X000	**•814354**	434 343	AL
I30									
1.4 i 16V	E	1396	1.4L-GAMMA	+/ R134	03/07 ▸	976062H010	**•814351**	563 396	AL
1.6 CVVT 16V	E	1591	1.6L-GAMMA	+/ R134	12/07 ▸	976062H010	**•814351**	563 396	AL
2.0 CVVT 16V	E	1975	2.0L-BETA	+/ R134	12/07 ▸	976062H010	**•814351**	563 396	AL
2.0 CRDi 16V 01052007 ▸ 09502007	D	1991	2.0L-D	+/ R134	05/07 ▸ 2007	976062H000	**•814351**	563 396	AL
MATRIX									
1.6 i	E	1599	G4,G4GD	+/ R134	05/01 ▸ 08/08	9760617000	**•818075**	588 352	AL
1.8 i	E	1796	G4GB	+/ R134	05/01 ▸ 08/06	9760617000	**•818075**	588 352	AL
PONY (94>)									
1.3 i	E	1341	G4EH62		07/94 ▸ 12/99	9760622051	**814255**	544 318	AL
1.5 i 12V	E	1495	G4EK-88		09/94 ▸ 12/99	9760622051	**814255**	544 318	AL
SANTA FÉ (2000>2006)									
2.7 i V6 24V	E	2656	G8-EA	+/ R134	10/05 ▸ 02/06	976062B000	**•814353**	674 414	AL
SANTA FÉ (2006>)									
2.7 i V6 24V	E	2656	G8-EA	+/ R134	03/06 ▸ 09/09	976062B000	**•814353**	674 414	AL
2.2 CRDi 16V	D	2188	D4-EB	+/ R134	03/06 ▸ 09/09	976062B000	**•814353**	674 414	AL
SOLARIS									
1.4 i	E	1396	1.4L-GAMMA		03/11 ▸	976061R000	**•814362**	654 383	AL
1.6 i	E	1591	1.6L-GAMMA		03/11 ▸	976061R000	**•814362**	654 383	AL
SONATA (2005>2008)									
2.4 i 16V	E	2359	G4KC	+/ R134	03/05 ▸ 09/06	976062E000	**•814347**	586 363	AL
3.3 i V6 24V	E	3342	G6DB	+/ R134	03/05 ▸ 09/06	976062E000	**•814347**	586 363	AL
TIBURON									
1.6 i 16V	E	1599	G4GRE2	+/ R134	01/02 ▸ 12/06	976062D000	**814264**	576 358	AL
2.0 i 16V	E	1975	G4GF	+/ R134	01/02 ▸ 12/06	976062D000	**814264**	576 358	AL
2.7 i V6 24V	E	2657	G6BA-G-167	+/ R134	01/02 ▸ 12/06	976062D000	**814264**	576 358	AL
TUCSON (2004>)									
2.0 i 16V	E	1975	G4GCG	+/ R134	07/04 ▸ 10/10	976062E000	**•814347**	586 363	AL
2.7 i V6 24V	E	2656	G6BA	+/ R134	07/04 ▸ 09/06	976062E000	**•814347**	586 363	AL
2.0 CRDi 16V	D	1991	D4-EA	+/ R134	07/04 ▸ 10/10	976062E000	**•814347**	586 363	AL
IVECO									
DAILY (99>)									
2.3 TD	D	2287	F1AE0481A, F1AE0481B		06/02 ▸	504022601	**818037**	648 310	AL
2.8 D, 2.8 TD	D	2798	8140-43B/C/N/S, 8140-63		05/99 ▸	99487944	**818036**	700 312	AL
IVECO TRUCKS									
EUROCARGO									
120 E.23, 130 E.23, 135 E.23 150 E.23, 170 E.23, 260 E.23 280 E.23	D	5861	8060.45STCA		06/91 ▸	8189330	**818038**	570 480	AL
150 E.27, 170 E.27, 260 E.27 320 E.27	D	7685	836046TCA		06/91 ▸	8189330	**818038**	570 480	AL

• **New** Nouveau **Neu** Nuevo **Novo** Nuovo **Nieuw** Nowi **Новый** Novy **Nou** Yeni **Νέους**

⏭ **Multi-product Crosslist on section 1** Cross List Multi-produits, Section 1
Crossliste siehe Kapitel 1 Crosslist Multiproducto en la sección 1
Lista Multi-produto na secção 1 Cross-list Multi prodotto nella sezione 1
Rubriek 1 : Cross list "alle produkten" Kombinovaný převodník v sekci 1
Crosslist multi-produse, secţie 1 **Çoklu ürün çapraz listesi bölüm 1 tedir**
Αντιστοιχίες προϊόντων στο κεφάλαιο 1

		CC				OE	Valeo	DIM	TECH
IVECO TRUCKS (.../...)									
EUROCARGO (.../...)									
60 E.12, 65 E.12, 75 E.12	D	3908	8040.25TC		06/91 ▸	8189330	**818038**	570 480	AL
60 E.14, 65 E.14, 75 E.14	D	3908	8040.45TCA		06/91 ▸	8189330	**818038**	570 480	AL
95 E.21, 150 E.21	D	5861	8060.45,8060E2		06/91 ▸	8189330	**818038**	570 480	AL
EUROCARGO TECTOR RESTYLING (2003>)									
100 E.17, 120 E.17	D	3920	4F4AE0481A		06/03 ▸	504080822	**818116**	439 345	AL
100 E.18, 140 E.18	D	5880	6F4AE0681E		06/03 ▸	504080822	**818116**	439 345	AL
100E.21, 130E.21, 150E.21 180E.21	D	5880	6F4AE0681D		06/03 ▸	504080822	**818116**	439 345	AL
130 E.18, 140 E.18	D	5880	6F4AE0681E		06/03 ▸	504080822	**818116**	439 345	AL
130 E.28, 140 E.28, 150 E.28 160 E.28, 180 E.28, 260 E.28	D	5880	6F4AE0681A		06/03 ▸	504080822	**818116**	439 345	AL
140 E.18, 160 E.18	D	5880	6F4AE0681E		06/03 ▸	504080822	**818116**	439 345	AL
140 E.24, 150 E.24, 160 E.24 180 E.24	D	5880	6F4AE0681B		06/03 ▸	504080822	**818116**	439 345	AL
75 E13	D	3920	4F4AE0481D		06/03 ▸	504080822	**818116**	439 345	AL
75 E15	D	3920	4F4AE0481C		06/03 ▸	504080822	**818116**	439 345	AL
75 E17	D	3920	4F4AE0481A		06/03 ▸	504080822	**818116**	439 345	AL
EUROFIRE RESTYLING									
100 E.21	D	5880				504080822	**818116**	439 345	AL
140 E.28, 150 E.28	D	5880				504080822	**818116**	439 345	AL
EUROSTAR									
180 E.38, 190 E.38, 240 E.38 400 E.38, 440 E.38	D	13798	8210.42L		01/93 ▸ 02/02	8189330	**818038**	570 480	AL
180 E.42, 190 E.42, 240 E.42 400 E.42, 440 E.42	D	13798	8210.42L		09/92 ▸ 04/95	8189330	**818038**	570 480	AL
180 E.42, 190 E.42, 240 E.42 400 E.42, 440 E.42	D	13798	8210.42L S5000		05/95 ▸	8189330	**818038**	570 480	AL
190 E.47, 240 E.47, 400 E.47 440 E.47	D	13798	8210.42L		09/92 ▸ 04/95	8189330	**818038**	570 480	AL
190 E.47, 240 E.47, 400 E.47 440 E.47	D	13798	8210.42L S5000		05/95 ▸	8189330	**818038**	570 480	AL
190 E.52, 240 E.52, 400 E.52 440 E.52	D	17173	8210.42L S5000		05/95 ▸	8189330	**818038**	570 480	AL
EUROSTAR CURSOR									
180 E.39, 190 E.39, 240 E.39 260 E.39, 400 E.39, 440 E.39	D	10308	F3AE0681E		10/99 ▸	8189330	**818038**	570 480	AL
180 E.43, 190 E.43, 240 E.43 260 E.43, 400 E.43, 440 E.43	D	10308	F3AE0681D		10/99 ▸	8189330	**818038**	570 480	AL
190 E.39, 260 E.39, 440 E.39	D	10308	F3AE0681		10/97 ▸	8189330	**818038**	570 480	AL
190 E.40, 440 E.40	D	10308	F3AE0681B		06/00 ▸	8189330	**818038**	570 480	AL
190 E.43, 260 E.43	D	10308	F3AE0681D		10/97 ▸	8189330	**818038**	570 480	AL
EUROSTAR LD									
190 E.52, 240 E.52, 400 E.52 440 E.52	D	17174	8280.42S		09/92 ▸ 04/95	8189330	**818038**	570 480	AL
EUROTECH									
180 E.24, 190 E.24	D	7685	8360.46		05/95 ▸	8189330	**818038**	570 480	AL
180 E.24, 190 E.24	D	7685	8360.46		09/92 ▸ 04/95	8189330	**818038**	570 480	AL
180 E.27, 190 E.27	D	7685	8360.46		09/92 ▸ 04/95	8189330	**818038**	570 480	AL
180 E.27, 190 E.27	D	7685	8360.46		05/95 ▸	8189330	**818038**	570 480	AL
180 E.30, 190 E.30, 240 E.30 400 E.30, 440 E.30	D	9500	8460.41C/K/L		09/92 ▸ 04/95	8189330	**818038**	570 480	AL
180 E.30, 190 E.30, 240 E.30 400 E.30, 440 E.30	D	9500	8460.41C/K/L		05/95 ▸	8189330	**818038**	570 480	AL

Valeo recommends replacing the receiver drier with the condenser
Pensez à changer la bouteille déshydratante avec le condenseur
Denken Sie daran, beim Wechsel des Kondensators auch den Trockner zu erneuern
Piense en la sustitución del filtro deshidratante con el condensador
A Valeo recomenda substituir o filtro desidratante com o condensador
Ricordatevi di sostituire il filtro disidratatore insieme al condensatore
Bij de vervanging van de condensor, vervang tevens de filter-droger
Valeo zaleca wymianę filtra osuszacza wraz ze skraplaczem
Рекомендируем замену осушителя вместо с конденсором
Spolu s kondenzátorem je nutné vyměnit také vysoušeč
Nu uitați sa schimbați uscatorul cu condensatorul
Kondenser değişimlerinde nem alıcının da değiştirilmesi gerektiğini dikkate alınız
Πρέπει να αντικαταστήσετε το φίλτρο υγρού μαζί με το συμπυκνωτή

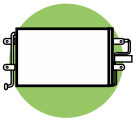

		CC				OE	Valeo	DIM	TECH
IVECO TRUCKS (.../...)									
EUROTECH (.../...)									
180 E.34, 190 E.34, 240 E.34 400 E.34, 440 E.34	D	9500	8460.41C/K/L		09/92 ▸ 04/95	8189330	**818038**	570 480	AL
180 E.34, 190 E.34, 240 E.34 400 E.34, 440 E.34	D	9500	8460.41C/K/L		05/95 ▸	8189330	**818038**	570 480	AL
180 E.42, 240 E.42, 260 E.42 400 E.42, 440	D	13798	8210.42L		05/95 ▸	8189330	**818038**	570 480	AL
180E.38, 190E.38, 240E.38 260E.38, 400E.38, 440E.38	D	9500	8460.41C/K/L		05/95 ▸	8189330	**818038**	570 480	AL
180E.38, 190E.38, 240E.38 260E.38, 400E.38, 440E.38	D	9500	8460.41N		05/95 ▸	8189330	**818038**	570 480	AL
180E.38, 190E.38, 240E.38 400E.38, 440E.38	D	9500	8460.41C/K/L		09/92 ▸ 04/95	8189330	**818038**	570 480	AL
190 E.42, 240 E.42, 260 E.42 400 E.42, 440	D	13798	8210.42L		09/92 ▸ 04/95	8189330	**818038**	570 480	AL
190 E.42, 240 E.42, 260 E.42 400 E.42, 440	D	13798	8210.42L/E2		05/95 ▸	8189330	**818038**	570 480	AL
EUROTECH CURSOR									
180 E.39, 190 E.39, 240 E.39 260 E.39, 400 E.39, 440 E.39	D	10308	F3AE0681E		10/99 ▸	8189330	**818038**	570 480	AL
180 E.43, 190 E.43, 240 E.43 260 E.43, 400 E.43, 440 E.43	D	10308	F3AE0681D		10/99 ▸	8189330	**818038**	570 480	AL
190 E.24, 260 E.24, 440 E.24	D	7790	F2BE0681D		10/98 ▸	8189330	**818038**	570 480	AL
190 E.31, 260 E.31, 440 E.31	D	7790	F2BE0681B		10/98 ▸	8189330	**818038**	570 480	AL
190 E.35, 260 E.35, 440 E.35	D	7790	F2BE0681A		10/98 ▸	8189330	**818038**	570 480	AL
EUROTRAKKER									
90 E.31, 380 E.31, 400 E.31	D	13798	8210.22V		05/95 ▸	8189330	**818038**	570 480	AL
90 E.37, 260 E.37, 330 E.37 340 E.37, 380 E.37, 400 E.37 410 E.37, 440 E.37	D	13798	8210.42K		09/92 ▸ 04/95	8189330	**818038**	570 480	AL
190 E.34, 340 E.34, 380 E.34 400 E.34	D	9500	8460.41K		09/92 ▸ 04/95	8189330	**818038**	570 480	AL
190 E.34, 340 E.34, 380 E.34 400 E.34	D	9500	8460.41K		05/95 ▸	8189330	**818038**	570 480	AL
190, E.37, 260 E.37, 330 E.37 340 E.37, 380 E.37, 400 E.37 410 E.37, 440 E.37	D	13798	8210.42K		05/95 ▸	8189330	**818038**	570 480	AL
190 E.37, 260 E.37, 330 E.37 340 E.37, 380 E.37, 400 E.37 410 E.37, 440 E.37	D	13798	8210.42L		09/92 ▸ 04/95	8189330	**818038**	570 480	AL
190 E.37, 260 E.37, 330 E.37 340 E.37, 380 E.37, 400 E.37 410 E.37, 440 E.37	D	13798	8210.42L		05/95 ▸	8189330	**818038**	570 480	AL
180 E.25	D	9500	8460.41T		05/95 ▸	8189330	**818038**	570 480	AL
190 E.30, 260 E.30	D	9500	8460.41C E2/T		05/95 ▸	8189330	**818038**	570 480	AL
190 E.42, 260 E.42, 330 E.42 340 E.42, 380 E.42, 400 E.42 410 E.42, 440 E.42	D	13798	8210.42L / LE2		05/95 ▸	8189330	**818038**	570 480	AL
EUROTRAKKER CURSOR									
190 E.24	D	7790	F2BE0681C		10/98 ▸	8189330	**818038**	570 480	AL
190 E.27, 260 E.27	D	7790	F2BE0681C		10/98 ▸	8189330	**818038**	570 480	AL
190 E.31, 260 E.31	D	7790	F2BE0681B		10/98 ▸	8189330	**818038**	570 480	AL
190 E.35, 260 E.35, 340 E.35 380 E.35, 400 E.35, 410 E.35	D	7790	F2BE0681A		10/98 ▸	8189330	**818038**	570 480	AL
190 E.35, 260 E.35, 380 E.35 400 E.35, 410 E.35	D	7790	F2BE0681A		10/98 ▸	8189330	**818038**	570 480	AL
190 E.38, 260 E.38, 340 E.38 380 E.38	D	7790	F2BE0681		01/01 ▸	8189330	**818038**	570 480	AL

• **New** Nouveau **Neu** Nuevo **Novo** Nuovo **Nieuw** Nowi **Новый** Novy **Nou** Yeni **Νέους**

⏭ **Multi-product Crosslist on section 1** Cross List Multi-produits, Section 1
Crossliste siehe Kapitel 1 Crosslist Multiproducto en la sección 1
Lista Multi-produto na secção 1 Cross-list Multi prodotto nella sezione 1
Rubriek 1 : Cross list "alle produkten" Kombinovaný převodník v sekci 1
Crosslist multi-produse, secţie 1 **Çoklu ürün çapraz listesi bölüm 1 tedir**
Αντιστοιχίες προϊόντων στο κεφάλαιο 1

		CC				OE	Valeo	DIM	TECH
IVECO TRUCKS (.../...)									
EUROTRAKKER CURSOR (.../...)									
340 E.44, 380 E.44, 410 E.44	D	7790	F2BE0681		01/01 ▸	8189330	**818038**	570 480	AL
STRALIS									
AD 190S30, AD 190S31, AT 190S31	D		F2BE0681B, F2BE0681E F2BE3681C	+🫙	06/03 ▸	41214450	**818985**	606 438	AL
AS 190S40	D		F3AE0681B, F3AE0681H	+🫙	02/02 ▸	41214450	**818985**	606 438	AL
AS 440S54, ES 440S54	D		F3BE0681A	+🫙	02/02 ▸	41214450	**818985**	606 438	AL
AT 440S43	D		F3AE0681D	+🫙	06/03 ▸	41214450	**818985**	606 438	AL
JAGUAR									
X-TYPE									
2.0 i V6 24V	E	2099	AJ-V6-2.0		02/02 ▸	C2S5302	**818023**	628 362	AL
2.5 i V6 24V	E	2495	AJ-V6-2.5		02/01 ▸	C2S5302	**818023**	628 362	AL
3.0 i V6 24V	E	2967	AJ-V6-3.0		02/01 ▸	C2S5302	**818023**	628 362	AL
2.0 D 16V	D	1998	X404		09/03 ▸ 06/07	C2S31605	**814199**	668 311	AL
JEEP									
GRAND CHEROKEE (93>99)									
4.0 i	E	3964	ERH	R134	01/93 ▸ 06/97	55036473	**818024**	547 427	AL
4.0 i	E	3964	ERH		07/97 ▸ 06/98	55115864	**817023**	565 444	AL
4.0 i	E	3964	ERH		06/98 ▸	55115918AB	**817288**	616 462	AL
5.2 i	E	5210	ELF	R134	01/93 ▸ 06/96	56005016	**818024**	547 427	AL
5.2 i	E	5210	ELF		07/96 ▸ 06/97	55115864	**817023**	565 444	AL
3.1 D	D	3124	EXA		11/98 ▸	55115918AB	**817288**	616 462	AL
GRAND CHEROKEE (99>2003)									
4.0 i	E	3964	ERH		08/00 ▸	55115918AB	**817288**	616 462	AL
4.7 i V8	E	4701	EVA, EVC		08/00 ▸	55115918AB	**817288**	616 462	AL
2.7 CRD	D	2688	ENF		10/01 ▸	55115918AC	**817288**	616 462	AL
KIA									
CARNIVAL									
2.5 V6	E	2497			08/99 ▸ 10/01	OK55261460D	**814270**	714 408	AL
2.9 TD	D	2903			08/99 ▸ 10/01	OK55261460D	**814270**	714 408	AL
CERATO									
1.6 i 16V	E	1599	G4ED	+🫙/ R134	01/04 ▸ 12/08	976062F000	•**814345**	556 353	AL
PICANTO									
1.0 i	E	999	1.0L-EPSILON	+🫙/ R134	09/06 ▸ 10/07	9760607200	•**814346**	389 333	AL
PICANTO (2004>2007)									
1.0	E	999	G4HF	+🫙/ R134	01/04 ▸ 12/07	9760607000	•**814346**	389 333	AL
1.1	E	1086	G4HG	+🫙/ R134	01/04 ▸ 12/07	9760607000	•**814346**	389 333	AL
1.1 CRDi	D	1120	D3FA	+🫙/ R134	11/05 ▸ 12/06	9760607200	•**814346**	389 333	AL
PICANTO (2006>2007)									
1.1 i	E	1086	1.1L-EPSILON	+🫙/ R134	09/06 ▸ 10/07	9760607200	•**814346**	389 333	AL
1.1 CRDI	D	1120	1.1L-U	+🫙/ R134	09/06 ▸ 10/07	9760607200	•**814346**	389 333	AL
SORENTO (2002>2006)									
2.4 i 16V	E	2351	G4JSG	+🫙/ R134	05/03 ▸ 01/04	976063E600	•**814352**	550 434	AL
2.4 i 16V	E	2351	G4JSG	R134	05/03 ▸ 05/06	976063E000	•**818080**	590 415	AL
3.5 i V6 24V	E	3497	6G72	R134	05/03 ▸ 05/06	976063E000	•**818080**	590 415	AL
3.5 i V6 24V	E	3497	6G72	+🫙/ R134	05/03 ▸ 01/04	976063E600	•**814352**	550 434	AL
2.5 CRDi 16V	D	2497	D4CB	+🫙/ R134	04/02 ▸ 01/04	976063E600	•**814352**	550 434	AL

Valeo recommends replacing the receiver drier with the condenser
Pensez à changer la bouteille déshydratante avec le condenseur
Denken Sie daran, beim Wechsel des Kondensators auch den Trockner zu erneuern
Piense en la sustitución del filtro deshidratante con el condensador
A Valeo recomenda substituir o filtro desidratante com o condensador
Ricordatevi di sostituire il filtro disidratatore insieme al condensatore
Bij de vervanging van de condensor, vervang tevens de filter-droger
Valeo zaleca wymianę filtra osuszacza wraz ze skraplaczem
Рекомендируем замену осушителя вместо с конденсором
Spolu s kondenzátorem je nutné vyměnit také vysoušeč
Nu uitați sa schimbați uscatorul cu condensatorul
Kondenser değişimlerinde nem alıcının da değiştirilmesi gerektiğini dikkate alınız
Πρέπει να αντικαταστήσετε το φίλτρο υγρού μαζί με το συμπυκνωτή

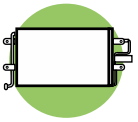

		CC				OE	Valeo	DIM	TECH
KIA (.../...)									
SORENTO (2002>2006) (.../...)									
2.5 CRDi 16V	D	2497	D4CB	R134	04/02 ▸ 05/06	976063E000	•**818080**	590 415	AL
SORENTO (2006>)									
3.3 i V6 24V	E	3297	33L	R134	06/06 ▸ 08/09	976063E000	•**818080**	590 415	AL
3.3 i V6 24V	E	3342	G6DB	R134	06/06 ▸ 08/09	976063E000	•**818080**	590 415	AL
2.5 CRDi 140 16V **2.5 CRDi 170 16V**	D	2497	D4CB	R134	06/06 ▸ 08/09	976063E000	•**818080**	590 415	AL
SPORTAGE									
2.0 i 16V	E	1975	G4GC	+/ R134	12/04 ▸ 12/06	976062E000	•**814347**	586 363	AL
2.7 i V6 24V	E	2656	G6BA	+/ R134	12/04 ▸ 12/06	976062E000	•**814347**	586 363	AL
2.0 CRDi	D	1991	D4EA	+/ R134	12/04 ▸ 12/06	976062E000	•**814347**	586 363	AL
LANCIA									
DELTA (2008>)									
1.4 TJet 16V,1.4 Turbo 16V	E	1368	198A1.000,198A4.000 198A7.000	+/ R134	06/08 ▸	51826520	**818192**	623 302	AL
1.6 MJTD 16V	D	1598	198A2.000,198A2.000/F 955A4.000,955A4.000/F	+/ R134	06/08 ▸	51826520	**818192**	623 302	AL
1.8 T Jet 16V	E	1742	939B1.000	+/ R134	04/09 ▸	51826520	**818192**	623 302	AL
1.9 MJTD 16V	D	1910	844A1.000	+/ R134	07/08 ▸	51826520	**818192**	623 302	AL
2.0 MJTD 16V	D	1956	198A5.000,198A5.000/F 844A2.000,844A2.000/F	+/ R134	07/08 ▸	51826520	**818192**	623 302	AL
KAPPA									
2.0 ie 20V	E	1995	838A1.000,838A6.000		10/94 ▸ 10/01	82487879	**814293**	488 387	AL
2.4 ie 20V	E	2446	838A2.000,838B2.000		05/96 ▸ 10/01	82487879	**814293**	488 387	AL
3.0 ie V6 24V	E	2959	838B.000		11/94 ▸ 10/01	82487879	**814293**	488 387	AL
LYBRA									
1.6 i 16V	E	1581	182A4.000	N	09/99 ▸ 06/02	46459581	**817386**	540 351	AL
1.8 i 16V	E	1747	839A4.000	N	09/99 ▸ 06/02	46459581	**817386**	540 351	AL
2.0 i 20V	E	1998	182B7.000	N	09/99 ▸ 06/02	46459581	**817386**	540 351	AL
1.9 JTD	D	1910	AR32302, AR37101	N	09/99 ▸ 06/02	46459581	**817386**	540 351	AL
2.4 JTD	D	2387	839A5.000, 839A6.000 AR32501	N	09/99 ▸ 06/02	46459581	**817386**	540 351	AL
1.6 i 16V	E	1581	182A4.000	+/ R134	07/02 ▸ 12/06	51708843	**814198**	544 351	AL
1.6 i 16V	E	1596	182B6.000	+/ R134	08/02 ▸ 12/06	51708843	**814198**	544 351	AL
1.8 i 16V	E	1747	839A4.000,839A7.000	+/ R134	07/02 ▸ 12/06	51708843	**814198**	544 351	AL
2.0 i 20V	E	1998	182B7.000,185A8.000	+/ R134	07/02 ▸ 12/06	51708843	**814198**	544 351	AL
2.4 JTD	D	2387	839A5.000,839A6.000 AR32501	+/ R134	09/99 ▸	51708843	**814198**	544 351	AL
1.9 JTD	D	1910	937A2.000,AR32302 AR37101	+/ R134	07/02 ▸ 12/06	51708843	**814198**	544 351	AL
MUSA									
1.4 i 16V	E	1368	843A1.000,192B2.000 350A1.000	+/ R134 / Type Magneti Marelli	07/04 ▸	46820833	**818021**	560 309	AL
1.3 JTD Multijet 16V	D	1248	188A9.000,199A3.000	+/ R134 / Type Magneti Marelli	07/04 ▸	46820833	**818021**	560 309	AL
PHEDRA									
2.0 i 16V	E	1997	EW10J4/L4	+/ R134	09/02 ▸	1489398080	**817579**	560 450	AL
3.0 i V6 24V	E	2946	ES9J4S/L4	+/ R134	09/02 ▸	1489257080	**817668**	712 364	AL
2.0 JTD 16V	D	1997	DW10ATED4	+/ R134	09/02 ▸	1489398080	**817579**	560 450	AL
2.0 JTD 16V	D	1997	DW10UTED4		04/06 ▸ 2010	1440143080	•**814366**	590 361	AL
2.2 JTD 16V	D	2179	DW12ATED4/L4	+/ R134	09/02 ▸	1489398080	**817579**	560 450	AL
2.2 JTD 16V	D	2179	DW12BTED4		12/07 ▸	1401113180	**814065**	678 355	AL
THEMA									
2.0 i 16V	E	1995	834F1.000		09/92 ▸ 11/94	1486721080	**816852**	690 462	AL

• **New** Nouveau **Neu** Nuevo **Novo** Nuovo **Nieuw** Nowi **Новый** Novy **Nou** Yeni **Νέους**

⏭ **Multi-product Crosslist on section 1** Cross List Multi-produits, Section 1
Crossliste siehe Kapitel 1 Crosslist Multiproducto en la sección 1
Lista Multi-produto na secção 1 Cross-list Multi prodotto nella sezione 1
Rubriek 1 : Cross list "alle produkten" Kombinovaný převodník v sekci 1
Crosslist multi-produse, secţie 1 **Çoklu ürün çapraz listesi bölüm 1 tedir**
Αντιστοιχίες προϊοντων στο κεφάλαιο 1

		CC				OE	Valeo	DIM	TECH
LANCIA (.../...)									
THEMA (.../...)									
2.5 TDs	D	2500	8144-97Y,8144-97YC		09/92 ▸ 11/94	82471989	**814292**	658 331	AL
Y (2000>2003)									
1.2 i, 1.2 i 16V	E	1242	188A4.000, 188A5.000	+ R134 / Type Magneti Marelli	09/00 ▸ 09/03	46820833	**818021**	560 309	AL
YPSILON (2003>)									
1.2 i, 1.2 i 16V	E	1242	188A4.000, 188A5.000	+ R134 / Type Magneti Marelli	10/03 ▸	46820833	**818021**	560 309	AL
1.4 i 16V	E	1368	843A1.000	+ R134 / Type Magneti Marelli	10/03 ▸	46820833	**818021**	560 309	AL
1.3 JTD 16V	D	1248	188A9.000	+ R134 / Type Magneti Marelli	10/03 ▸	46820833	**818021**	560 309	AL
ZETA									
2.0 ie 16V	E	1997	EW10J4/L4		01/01 ▸ 08/02	1486721080	**816852**	690 462	AL
2.0 ie 16V, 2.0 ie Turbo	E	1998	RFV, RGX		10/94 ▸ 12/00	1486721080	**816852**	690 462	AL
2.0 JTD	D	1997	DW10ATED/L4, DW10ATED4		01/00 ▸ 08/02	1486721080	**816852**	690 462	AL
2.1 TD	D	2088	P8C		03/96 ▸ 12/00	1486721080	**816852**	690 462	AL
LAND ROVER									
DISCOVERY (98>2004)									
4.0 i V8 16V	E	3950	35D-185	R134	11/98 ▸ 11/04	JRB100790	**818025**	636 388	AL
2.5 Td5	D	2496	LANDR01	R134	11/98 ▸ 11/04	JRB100790	**818025**	636 388	AL
FREELANDER									
1.8 i 16V ▸ YA999999	E	1796	18K4FK	+ R134	10/97 ▸ 12/00	AWR5796	**817067**	510 437	AL
1.8 i 16V 1A000001 ▸	E	1796	18K4FK	+ R134	01/01 ▸ 09/03	JRB101070	**817549**	625 313	AL
2.5 i V6 ▸ YA999999	E	2497	25K6	+ R134	03/00 ▸ 12/00	AWR5796	**817067**	510 437	AL
2.5 i V6 1A000001 ▸	E	2497	25K6	+ R134	01/01 ▸ 09/03	JRB101070	**817549**	625 313	AL
2.0 Td4 ▸ YA999999	D	1951	M47-112	+ R134	09/00 ▸ 12/00	AWR5796	**817067**	510 437	AL
2.0 Td4 1A000001 ▸	D	1951	M47-112	+ R134	01/01 ▸ 09/03	JRB101070	**817549**	625 313	AL
2.0 D	D	1994	20L4D	+ R134	10/97 ▸ 09/00	AWR5796	**817067**	510 437	AL
FREELANDER (2006>)									
3.2 i V6	E	3192	I6		02/06 ▸ 09/06	LR000566	**814184**	587 470	AL
2.2 TD4 16V	D	2179	DW12		02/06 ▸	LR000566	**814184**	587 470	AL
RANGE ROVER (2002>2009)									
2.9 Td6 24V	D	2926	M57D30	+	03/02 ▸ 06/09	JRW000020	**814165**	648 441	AL
4.4 i V8 32V	E	4398	M62B44	+	03/02 ▸ 05/05	JRW000020	**814165**	648 441	AL
LEXUS									
IS (2005>)									
2.5 i V6 24V	E	2500	4GRFSE	+ R134	08/05 ▸ 08/08	8846053030	**814226**	679 332	AL
IS (2008>)									
2.5 i V6 24V	E	2500	4GRFSE	+ R134	08/08 ▸	8846053030	**814226**	679 332	AL
IS 250C (2009>)									
2.5 i V6 24V	E	2500	4GRFSE	+ R134	04/09 ▸	8846053030	**814226**	679 332	AL
LS 400 (94>2000)									
4.0 i V8 32V	E	3969	1UZ-FE		10/94 ▸ 08/00	8846050120	**814310**	714 388	AL

Valeo recommends replacing the receiver drier with the condenser
Pensez à changer la bouteille déshydratante avec le condenseur
Denken Sie daran, beim Wechsel des Kondensators auch den Trockner zu erneuern
Piense en la sustitución del filtro deshidratante con el condensador
A Valeo recomenda substituir o filtro desidratante com o condensador
Ricordatevi di sostituire il filtro disidratatore insieme al condensatore
Bij de vervanging van de condensor, vervang tevens de filter-droger
Valeo zaleca wymianę filtra osuszacza wraz ze skraplaczem
Рекомендируем замену осушителя вместо с конденсором
Spolu s kondenzátorem je nutné vyměnit také vysoušeč
Nu uitați sa schimbați uscatorul cu condensatorul
Kondenser değişimlerinde nem alıcının da değiştirilmesi gerektiğini dikkate alınız
Πρέπει να αντικαταστήσετε το φίλτρο υγρού μαζί με το συμπυκνωτή

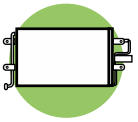

		CC				OE	Valeo	DIM	TECH
MAN									
F 2000									
19-33.343/403	D	10000	D2865		01/94 ▸	81619200012	**818040**	678 305	AL
19-33.343/403	D	10000	D2865		01/95 ▸	81619200012	**818040**	678 305	AL
19-41.463	D	12800	D2876		01/95 ▸	81619200012	**818040**	678 305	AL
19-41.463	D	12800	D2876		02/98 ▸	81619200012	**818040**	678 305	AL
20-45	D	12000	D2866		06/01 ▸	81619200012	**818040**	678 305	AL
F 90									
19.242/262/272/292	D	12000			09/91 ▸	81619206011	**818041**	688 260	AL
19.332/342/362/362/372	D	12000			09/91 ▸	81619206011	**818041**	688 260	AL
19.402/422/462/502	D	12000			09/91 ▸	81619206011	**818041**	688 260	AL
12-41.262/332/422	D	12000	D2866			81619206018	**818042**	678 260	AL
12-41.262/332/422	D	12000	D2866		01/86 ▸	81619206018	**818042**	678 260	AL
12-41.262/332/422	D	12000	D2866		01/86 ▸ 1994	81619206018	**818042**	678 260	AL
12-41.372	D	12000	D2866		1990 ▸	81619206018	**818042**	678 260	AL
12-41.402	D	12000	D2866		1993 ▸	81619206018	**818042**	678 260	AL
12-41.422	D	12000	D2866		1994 ▸	81619206018	**818042**	678 260	AL
12-41.442	D	12000	D2866		1994 ▸	81619206018	**818042**	678 260	AL
261	D		D2866			81619206018	**818042**	678 260	AL
41.502	D	18300	D2840		09/91 ▸	81619206018	**818042**	678 260	AL
L 2000									
6/10.73/153/223	D				10/93 ▸	81619200011	**818043**	585 250	AL
6/10.73/153/223	D		6 CYL		10/93 ▸	81619200011	**818043**	585 250	AL
M 2000									
12-15.163 LC	D				01/96 ▸	81619206026	**818044**	652 286	AL
12-18.224LC	D				01/96 ▸	81619206026	**818044**	652 286	AL
12-18.264 LC	D				01/96 ▸	81619206026	**818044**	652 286	AL
14-25.224MC	D				01/96 ▸	81619206026	**818044**	652 286	AL
14-25.264 MC	D				01/96 ▸	81619206026	**818044**	652 286	AL
M 90									
12.172/192	D		D0826		10/93 ▸	81619206026	**818044**	652 286	AL
14.232	D		D0826		10/93 ▸	81619206026	**818044**	652 286	AL
18.272	D		D0826		10/93 ▸	81619206026	**818044**	652 286	AL
TG-A									
310	D	11967	D2866LF26		04/00 ▸	81619200018	**818033**	745 353	AL
360	D	11967	D2866LF27		04/00 ▸	81619200018	**818033**	745 353	AL
410	D	11967	D2866LF27		04/00 ▸	81619200018	**818033**	745 353	AL
MAZDA									
2 (2003>)									
1.25 i 16V	E	1242	DHC		03/03 ▸	DE9461480B	**818195**	531 333	AL
1.4 i 16V	E	1388	ZH14		03/03 ▸	DE9461480B	**818195**	531 333	AL
1.6 i 16V	E	1596	DURA16		03/03 ▸	DE9461480B	**818195**	531 333	AL
1.4 MZ-CD	D	1399	MZ14CD		03/03 ▸	DE9461480B	**818195**	531 333	AL
3 (2003>2006)									
1.4 i 16V	E	1349	MZR14	+ R134	06/03 ▸ 02/06	BPYK6148ZA	**814216**	599 383	AL
1.6 i 16V	E	1598	MZR16	+ R134	06/03 ▸ 10/05	BPYK6148ZA	**814216**	599 383	AL
2.0 i 16V	E	1999	MZR20	+ R134	06/03 ▸ 10/05	BPYK6148ZA	**814216**	599 383	AL
3 (FL) (2006>)									
1.4 i 16V	E	1349	MZR14	+ R134	03/06 ▸ 12/08	BP4K61480B	**814265**	600 378	AL
1.4 i 16V	E	1349	MZR14	+ R134	03/06 ▸ 12/08	BPYK6148ZA	**814216**	599 383	AL
1.6 i 16V	E	1598	MZR16	+ R134	03/06 ▸ 12/08	BPYK6148ZA	**814216**	599 383	AL
1.6 i 16V	E	1598	MZR16	+ R134	03/06 ▸ 12/08	BP4K61480B	**814265**	600 378	AL

• **New** Nouveau **Neu** Nuevo **Novo** Nuovo **Nieuw** Nowi **Новый** Novy **Nou** Yeni **Νέους**

⏭ **Multi-product Crosslist on section 1** Cross List Multi-produits, Section 1
Crossliste siehe Kapitel 1 Crosslist Multiproducto en la sección 1
Lista Multi-produto na secção 1 Cross-list Multi prodotto nella sezione 1
Rubriek 1 : Cross list "alle produkten" Kombinovaný převodník v sekci 1
Crosslist multi-produse, secţie 1 **Çoklu ürün çapraz listesi bölüm 1 tedir**
Αντιστοιχίες προϊόντων στο κεφάλαιο 1

		CC				OE	Valeo	DIM	TECH
MAZDA (.../...)									
3 (FL) (2006>) (.../...)									
2.0 i 16V	E	1999	MZR20	+/ R134	03/06 ▸ 12/08	BP4K61480B	**814265**	600 378	AL
2.0 i 16V	E	1999	MZR20	+/ R134	03/06 ▸ 12/08	BPYK6148ZA	**814216**	599 383	AL
2.3 i Turbo 16V	E	2261	MZR-DISI TURBO	+/ R134	07/06 ▸	BPYK6148ZA	**814216**	599 383	AL
2.3 i Turbo 16V	E	2261	MZR-DISI TURBO	+/ R134	07/06 ▸	BP4K61480B	**814265**	600 378	AL
1.6 MZ-CD 16V	D	1560	MZ-CD16,MZ16CD/FAP	+/ R134	09/06 ▸ 12/08	BPYK6148ZA	**814216**	599 383	AL
1.6 MZ-CD 16V	D	1560	MZ-CD16,MZ16CD/FAP	+/ R134	03/06 ▸ 12/08	BP4K61480B	**814265**	600 378	AL
2.0 MZ-CD 16V	D	1998	MZR-CD20,MZR-CD20/F	+/ R134	12/06 ▸ 12/08	BPYK6148ZA	**814216**	599 383	AL
5 (2005>2006)									
1.8 i 16V	E	1798	MZR18	+/ R134	02/05 ▸ 12/07	BPYK6148ZA	**814216**	599 383	AL
2.0 i 16V	E	1999	MZR20	+/ R134	02/05 ▸ 12/07	BPYK6148ZA	**814216**	599 383	AL
2.0 CD 16V	D	1998	MZR-CD20	+/ R134	02/05 ▸ 12/07	BPYK6148ZA	**814216**	599 383	AL
5 (2007>)									
1.8 i 16V	E	1798	MZR18	+/ R134	09/07 ▸	BPYK6148ZA	**814216**	599 383	AL
1.8 i 16V	E	1798	MZR18	+/ R134	09/07 ▸	BP4K61480B	**814265**	600 378	AL
2.0 i 16V	E	1999	MZR20	+/ R134	09/07 ▸	BP4K61480B	**814265**	600 378	AL
2.0 i 16V	E	1999	MZR20	+/ R134	09/07 ▸	BPYK6148ZA	**814216**	599 383	AL
2.0 CD 16V	D	1998	MZR-CD20	+/ R134	09/07 ▸	BPYK6148ZA	**814216**	599 383	AL
2.0 CD 16V	D	1998	MZR-CD20	+/ R134	09/07 ▸	BP4K61480B	**814265**	600 378	AL
6 (2002>2005)									
1.8 i 16V	E	1798	MZR18	+/ R134	02/02 ▸ 02/05	GJYA6148ZA	**818090**	650 322	AL
2.0 i 16V	E	1999	MZR20	+/ R134	02/02 ▸ 02/05	GJYA6148ZA	**818090**	650 322	AL
2.3 i 16V	E	2261	L3	+/ R134	02/02 ▸ 02/05	GJYA6148ZA	**818090**	650 322	AL
2.0 DiTD,2.0 DiTD 16V	D	1998	MZR-CD20,RF-136	+/ R134	06/02 ▸ 02/05	GJYA6148ZA	**818090**	650 322	AL
6 (2005>2006)									
1.8 i 16V	E	1798	MZR18	+/ R134	03/05 ▸ 08/07	GJYA6148ZA	**818090**	650 322	AL
2.0 i 16V	E	1999	MZR20	+/ R134	03/05 ▸ 08/07	GJYA6148ZA	**818090**	650 322	AL
2.3 DISI Turbo,2.3 i 16V	E	2261	L3	+/ R134	10/04 ▸	GJYA6148ZA	**818090**	650 322	AL
2.0 DiTD 16V	D	1998	MZR-CD20	+/ R134	04/05 ▸ 08/07	GJYA6148ZA	**818090**	650 322	AL
6 (2007>2010)									
1.8 MZR 16V	E	1798	MZR18	+/ R134	08/07 ▸ 11/09	GJYA6148ZA	**818090**	650 322	AL
2.0 MZR 16V	E	1999	MZR20	+/ R134	08/07 ▸ 11/09	GJYA6148ZA	**818090**	650 322	AL
2.5 MZR 16V	E	2488	MZR25	+/ R134	08/07 ▸ 11/09	GJYA6148ZA	**818090**	650 322	AL
323 (BF) (85>89)									
1.4 i	E	1324	B3		01/85 ▸ 10/89	BB7C61480	**814281**	550 330	AL
1.5 i	E	1498	B5		01/85 ▸ 10/89	BB7C61480	**814281**	550 330	AL
1.6 i	E	1597	B6B, B6		01/85 ▸ 10/89	BB7C61480	**814281**	550 330	AL
323 (BG) (89>94)									
1.3 i	E	1324	B3E		01/89 ▸ 10/94	BB7C61480	**814281**	550 330	AL
1.6 i	E	1598	B6E		01/89 ▸ 10/94	BB7C61480	**814281**	550 330	AL
1.8 i	E	1840	BP		01/89 ▸ 10/94	BB7C61480	**814281**	550 330	AL
1,7 D	D	1720	PN54		01/89 ▸ 10/94	BB7C61480	**814281**	550 330	AL
1.3 i	E	1324	B3E		09/89 ▸ 07/94	BR7061480	**814278**	548 331	AL
1.6 i	E	1598	B6E		09/89 ▸ 06/91	BR7061480	**814278**	548 331	AL
1.8 i	E	1840	BP		11/91 ▸ 12/93	BR7061480	**814278**	548 331	AL
1.7 D	D	1720	PN54		08/89 ▸ 07/94	BR7061480	**814278**	548 331	AL
323 (BA) (94>96)									
1.3 i	E	1324	B3-C9		06/94 ▸ 09/96	B01W61480F	**814253**	612 278	AL
1.5 i	E	1489	Z5		06/94 ▸ 09/96	B01W61480F	**814253**	612 278	AL
1.5 i	E	1489	Z5	+/ R134	10/94 ▸ 09/96	B01A61480	**818084**	587 298	AL
1.8 i 16V	E	1840	BP-ZE	+/ R134	08/94 ▸ 09/96	B01A61480	**818084**	587 298	AL
323 (BA) (96>98)									
1.3 i 16V	E	1324	B3-ME		10/96 ▸ 06/98	BC1M61480A	**814257**	609 308	AL

Valeo recommends replacing the receiver drier with the condenser
Pensez à changer la bouteille déshydratante avec le condenseur
Denken Sie daran, beim Wechsel des Kondensators auch den Trockner zu erneuern
Piense en la sustitución del filtro deshidratante con el condensador
A Valeo recomenda substituir o filtro desidratante com o condensador
Ricordatevi di sostituire il filtro disidratatore insieme al condensatore
Bij de vervanging van de condensor, vervang tevens de filter-droger

Valeo zaleca wymianę filtra osuszacza wraz ze skraplaczem
Рекомендируем замену осушителя вместо с конденсором
Spolu s kondenzátorem je nutné vyměnit také vysoušeč
Nu uitați sa schimbați uscatorul cu condensatorul
Kondenser değişimlerinde nem alıcının da değiştirilmesi gerektiğini dikkate alınız
Πρέπει να αντικαταστήσετε το φίλτρο υγρού μαζί με το συμπυκνωτή

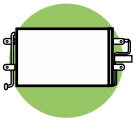

		CC				OE	Valeo	DIM	TECH

MAZDA (.../...)

323 (BA) (96>98) (.../...)

1.3 i 16V	E	1324	B3-ME		01/98 ▸ 06/98	B01W61480F	**814253**	612 278	AL
1.5 i 16V	E	1489	Z5-DE		01/98 ▸ 06/98	B01W61480F	**814253**	612 278	AL
1.5 i 16V	E	1489	Z5-DE		10/96 ▸ 06/98	BC1M61480A	**814257**	609 308	AL
1.6 i	E	1598	B6-DA		01/98 ▸ 06/98	B01W61480F	**814253**	612 278	AL
1.6 i	E	1598	B6-DA		02/97 ▸ 06/98	BC1M61480A	**814257**	609 308	AL
1.8 i 16V	E	1840	BP-ZE		10/96 ▸ 06/98	BC1M61480A	**814257**	609 308	AL
1.8 i 16V	E	1840	BP-ZE		01/98 ▸ 06/98	B01W61480F	**814253**	612 278	AL

323 (BJ) (98>2000)

1.3 i 16V,1.4 i 16V	E	1324	B3-BJ,B3-ME		08/98 ▸ 09/00	B25F61480B	**818087**	609 308	AL
1.5 i 16V	E	1498	ZL		08/98 ▸ 09/00	B25F61480B	**818087**	609 308	AL
1.8 i 16V	E	1840	FP-18		08/98 ▸ 09/00	B25F61480A	**818087**	609 308	AL
2.0 DiTD	D	1998	RFT		08/98 ▸ 09/00	BJ3A61480C	**818088**	414 298	AL
2.0 Di	D	1998	RF-ID		08/98 ▸ 09/00	B25F61480B	**818087**	609 308	AL

323 (BJ) (2000>2003)

1.3 i 16V	E	1324	B3-ME		10/00 ▸ 10/03	B25H61480A	**818087**	609 308	AL
1.6 i 16V	E	1598	ZM-3		10/00 ▸ 10/03	B25P61480A	**818087**	609 308	AL
2.0 i 16V	E	1991	FS-7		10/00 ▸ 10/03	B25F61480B	**818087**	609 308	AL
2.0 DiTD 16V	D	1998	RFT-DI-100		10/00 ▸ 10/03	B25H61480	**818087**	609 308	AL
2.0 DiTD 16V	D	1998	RFT-DI-100		10/00 ▸ 10/03	BJ3A61480A	**818088**	414 298	AL

626 (GD) (87>92)

1.8 i 16V	E	1789	F8		11/87 ▸ 05/92	GJ5161480B	**814274**	553 331	AL
2.0 i 16V	E	1984	FE		11/87 ▸ 05/92	GJ5161480B	**814274**	553 331	AL

626 (GE) (91>97)

1.8 i 16V	E	1840	FP-01,FP-16		08/91 ▸ 05/97	GA7H61480	**814254**	544 308	AL
2.0 i 16V	E	1991	FS-31,FS-83,FS-84		08/91 ▸ 05/97	GA7H61480	**814254**	544 308	AL
2.5 i	E	2497	KL-21,KL-22		09/91 ▸ 05/97	GA7H61480	**814254**	544 308	AL

626 (GF) (97>99)

1.8 i 16V	E	1840	FP		06/97 ▸ 09/99	GE4T61480B	**818085**	550 368	AL
2.0 i 16V	E	1991	FS-115,FS-136		06/97 ▸ 09/99	GE4T61480B	**818085**	550 368	AL
2.0 DiTD 16V	D	1998	RFT-DI-100,RFT-DI-90		07/98 ▸ 09/99	GE4T61480B	**818085**	550 368	AL

626 (GF) (99>2002)

1.8 i 16V	E	1840	FP		10/99 ▸	GE4T61480B	**818085**	550 368	AL
2.0 i 16V	E	1991	FS-115,FS-136		06/00 ▸	GE4T61480B	**818085**	550 368	AL
2.0 DiTD 16V	D	1998	RFT-DI-100,RFT-DI-110 RFT-DI-90		10/99 ▸	GE4T61480B	**818085**	550 368	AL

626 (GW) (97>99)

1.8 i 16V	E	1840	FP		11/97 ▸ 09/99	GE4T61480B	**818085**	550 368	AL
2.0 i 16V	E	1991	FS-115,FS-136		11/97 ▸ 09/99	GE4T61480B	**818085**	550 368	AL
2.0 DiTD 16V	D	1998	RFT-DI-100,RFT-DI-110 RFT-DI-90		07/98 ▸ 09/99	GE4T61480B	**818085**	550 368	AL

626 (GW) (99>2002)

1.8 i 16V	E	1840	FP		10/99 ▸	GE4T61480B	**818085**	550 368	AL
2.0 i 16V	E	1991	FS-115,FS-136		06/00 ▸	GE4T61480B	**818085**	550 368	AL
2.0 DiTD 16V	D	1998	RFT-DI-110		10/99 ▸	GE4T61480B	**818085**	550 368	AL

CX-7 (2007>)

2.3 i Turbo 16V	E	2261	MZR-DISI TURBO	+/ R134	03/09 ▸ 09/09	EH4461480A	**814235**	675 397	AL

CX-7 (2009>)

2.3 i Turbo 16V	E	2261	MZR-DISI TURBO	+/ R134	06/09 ▸	EH4461480A	**814235**	675 397	AL

• **New** Nouveau **Neu** Nuevo **Novo** Nuovo **Nieuw** Nowi **Новый** Novy **Nou** Yeni **Νέους**

⏭ **Multi-product Crosslist on section 1** Cross List Multi-produits, Section 1
Crossliste siehe Kapitel 1 Crosslist Multiproducto en la sección 1
Lista Multi-produto na secção 1 Cross-list Multi prodotto nella sezione 1
Rubriek 1 : Cross list "alle produkten" Kombinovaný převodník v sekci 1
Crosslist multi-produse, secţie 1 **Çoklu ürün çapraz listesi bölüm 1 tedir**
Αντιστοιχίες προϊόντων στο κεφάλαιο 1

		CC				OE	Valeo	DIM	TECH
MAZDA (.../...)									
CX-7 (2009>) (.../...)									
2.2 CDVi 16V	D	2184	MZR-CD22/F	+/ R134	09/09 ▸	EH4461480A	**814235**	675 397	AL
DEMIO									
1.3 i	E	1324	B3-2E,B3-2EL,B3-2ELP B3-2EN		10/98 ▸ 03/03	D20161480B	**814258**	298 328	AL
MPV									
2.3 i 16V	E	2261	L3	+/ R134	03/02 ▸ 04/05	LD4761480	**814266**	634 438	AL
2.3 i 16V	E	2261	L3	+/ R134	03/02 ▸ 04/05	LD4761480A	**814239**	670 465	AL
3.0 i V6	E	2967	AJ-200	+/ R134	03/02 ▸ 05/06	LD4761480A	**814239**	670 465	AL
2.0 DiTD	D	1998	RF-136	+/ R134	03/02 ▸ 04/05	LD4761480A	**814239**	670 465	AL
2.0 DiTD	D	1998	RF-136	+/ R134	03/02 ▸ 04/05	LD4761480	**814266**	634 438	AL
MX5 (2005>)									
1.8 i 16V	E	1798	MZR18	+/ R134	03/05 ▸	NE5161480C	**814227**	594 332	AL
2.0 i 16V	E	1999	MZR20	+/ R134	03/05 ▸	NE5161480C	**814227**	594 332	AL
MX6									
2.0 i	E	1991	FS-19		07/91 ▸	GA5R61480A	**814251**	552 338	AL
2.5 i V6	E	2497	KL-19,KL-20		07/91 ▸	GA5R61480A	**814251**	552 338	AL
PREMACY (99>2001)									
1.8 i 16V	E	1840	FP,FP-18		06/99 ▸ 06/01	C10061480	**818092**	605 338	AL
2.0 DiTD	D	1998	RFT		06/99 ▸ 06/01	CB0561480B	**814316**	414 338	AL
PREMACY (2001>)									
1.8 i 16V	E	1840	FP-E1		07/01 ▸ 08/05	C10061480B	**818092**	605 338	AL
2.0 i 16V	E	1991	FS-7E,FS-7G		07/01 ▸ 08/05	C10061480B	**818092**	605 338	AL
2.0 DiTD 16V	D	1998	RF-4F		07/01 ▸ 08/03	CB0561480B	**814316**	414 338	AL
RX8 (2003>)									
1.3 i	E	2616	13B-MSP	+/ R134	02/03 ▸	F15161480	**814215**	606 320	AL
MERCEDES									
190 (201)									
2.0 D ▸ A001329	D	1997	601.911	R12>R134a	12/83 ▸	2018300370	**816949**	580 330	AL
A CLASS (168) (97>2003)									
A140 i	E	1397	166.940	+/ R134	05/97 ▸ 05/01	1685000454	**817504**	538 381	AL
A140 i	E	1397	166.940	+/ R134	06/01 ▸	1685000854	**817659**	538 381	AL
A160 i	E	1598	166.960	+/ R134	05/97 ▸ 05/01	1685000454	**817504**	538 381	AL
A160 i	E	1598	166.960	+/ R134	06/01 ▸	1685001154	**817659**	538 381	AL
A190 i	E	1898	166.990	+/ R134	04/99 ▸ 05/01	1685000454	**817504**	538 381	AL
A190 i	E	1898	166.990	+/ R134	06/01 ▸	1685000854	**817659**	538 381	AL
A210 i	E	2084	166.995	+/ R134	01/02 ▸	1685000454	**817504**	538 381	AL
A210 i	E	2084	166.995	+/ R134	01/02 ▸	1685001154	**817659**	538 381	AL
A160CDI, A170CDI	D	1689	668,94, 668941, 668942	+/ R134	05/98 ▸ 05/01	1685000454	**817504**	538 381	AL
A160CDI, A170CDI	D	1689	668,94, 668941, 668942	+/ R134	06/01 ▸	1685001154	**817659**	538 381	AL
C CLASS (202) (93>2001)									
C180 i ▸ F483847	E	1799	111,92, 111921		03/93 ▸	2028300870	**816900**	570 400	AL
C180 i A436436 ▸	E	1799	111.920		03/93 ▸ 03/00	2028300970	**817562**	595 411	AL
C200 i A436436 ▸	E	1998	111.941		03/93 ▸ 03/00	2028300970	**817562**	595 411	AL

Valeo recommends replacing the receiver drier with the condenser
Pensez à changer la bouteille déshydratante avec le condenseur
Denken Sie daran, beim Wechsel des Kondensators auch den Trockner zu erneuern
Piense en la sustitución del filtro deshidratante con el condensador
A Valeo recomenda substituir o filtro desidratante com o condensador
Ricordatevi di sostituire il filtro disidratatore insieme al condensatore
Bij de vervanging van de condensor, vervang tevens de filter-droger

Valeo zaleca wymianę filtra osuszacza wraz ze skraplaczem
Рекомендируем замену осушителя вместо с конденсором
Spolu s kondenzátorem je nutné vyměnit také vysoušeč
Nu uitați sa schimbați uscatorul cu condensatorul
Kondenser değişimlerinde nem alıcının da değiştirilmesi gerektiğini dikkate alınız
Πρέπει να αντικαταστήσετε το φίλτρο υγρού μαζί με το συμπυκνωτή

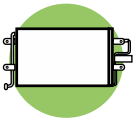

		CC				OE	Valeo	DIM	TECH
							MERCEDES	(.../...)	
C CLASS (202) (93>2001) (.../...)									
C200 i, C200K	E	1998	111941, 111.944/5		01/94 ▸ 02/01	2028300870	**816900**	570 400	AL
C220 i	E	2199	111.961		03/93 ▸ 03/00	2028300870	**816900**	570 400	AL
C230 i A436436 ▸	E	2295	111.974		08/95 ▸ 03/00	2028300970	**817562**	595 411	AL
C230 i	E	2295	111.974		08/95 ▸ 02/01	2028300870	**816900**	570 400	AL
C230K	E	2295	111.975	+ support	09/95 ▸ 03/00	2028300770	**817492**	595 411	AL
C240 i	E	2398	112.910		06/97 ▸ 06/98	2028300870	**816900**	570 400	AL
C240 i	E	2398	112.910		06/98 ▸ 03/00	2028300970	**817562**	595 411	AL
C280 i	E	2799	104.941		05/93 ▸ 03/00	2028300870	**816900**	570 400	AL
C36 AMG	E	3606	C36AMG		09/94 ▸ 03/00	2028300870	**816900**	570 400	AL
C43 AMG	E	4266	113.944		10/97 ▸ 03/00	2028300870	**816900**	570 400	AL
C200D	D	1997	601.913		03/93 ▸ 03/00	2028300870	**816900**	570 400	AL
C200D	D	1998	604.915		03/93 ▸ 02/01	2028300870	**816900**	570 400	AL
C200CDI	D	2151	611.960A	+ support	07/98 ▸ 03/00	2028300770	**817492**	595 411	AL
C200CDI, C220 CDI	D	2151	611.960		07/98 ▸ 02/01	2028301070	**817563**	595 411	AL
C220D	D	2155	604.910		08/93 ▸ 02/01	2028300870	**816900**	570 400	AL
C250D	D	2497	605.910		05/93 ▸ 03/00	2028300870	**816900**	570 400	AL
C250TD	D	2497	605.960	+ support	09/95 ▸ 02/01	2028300770	**817492**	595 411	AL
C CLASS (203) (2000>2003)									
C180, C200, C200CGI, C230	E	1796	271.94, 271942, 271946 271948	+ R134	06/02 ▸	2035000554	**817848**	648 371	AL
C180 1.8 i 16V	E	1796	271.940,271.942,271.946 271.948	+	06/02 ▸ 12/03	2035000854	**•818200**	628 371	AL
C180, C200	E	1998	111951, 111955	+ R134	04/00 ▸	2035000554	**817848**	648 371	AL
C200	E	1998	111.955	+	09/00 ▸ 12/03	2035000854	**•818200**	628 371	AL
C200	E	2295	111.981	+ R134	09/00 ▸ 12/03	2035000554	**817848**	648 371	AL
C 230	E	2295	111.981	+	09/00 ▸ 12/03	2035000854	**•818200**	628 371	AL
C240	E	2597	112912, 112916	+ R134	04/00 ▸	2035000554	**817848**	648 371	AL
C 260	E	2597	112.912,112.916	+	04/00 ▸ 12/03	2035000854	**•818200**	628 371	AL
C32K, C320	E	3199	112946, 112953, 112961	+ R134	04/00 ▸	2035000554	**817848**	648 371	AL
3.2 i V6	E	3199	112.946,112.953,112.961	+	04/00 ▸ 12/03	2035000854	**•818200**	628 371	AL
C200CDI, C220CDI	D	2148	611962, 646.962/3	+ R134	04/00 ▸	2035001354	**817849**	648 371	AL
2.1 CDI	D	2148	611.962,646.962,646.963	+	04/00 ▸ 12/03	2035000854	**•818200**	628 371	AL
C270CDI	D	2685	612.962	+ R134	08/00 ▸	2035001354	**817849**	648 371	AL
C30CDI	D	2950	612.990	+ R134	09/02 ▸	2035001354	**817849**	648 371	AL
C CLASS (203) (2004>)									
C160 i,C180 i,C200 i,C200CGI C220CGI,C230 i	E	1796	271.921,271.940,271.942 271.946,271.948	+	01/04 ▸ 02/08	2035000854	**•818200**	628 371	AL
C230 i	E	2496	272.920	+	01/04 ▸ 02/08	2035000854	**•818200**	628 371	AL
C240 i	E	2597	112.916	+	01/04 ▸ 08/07	2035000854	**•818200**	628 371	AL
C280 i ▸ 829157	E	2996	272.940	+	06/05 ▸	2035000854	**•818200**	628 371	AL
C320 i	E	3199	112.946,112.953	+	01/04 ▸ 02/08	2035000854	**•818200**	628 371	AL
C350 i	E	3498	272.960,272.970	+	01/05 ▸ 02/08	2035000854	**•818200**	628 371	AL
C55AMG i	E	5439	113.988	+	01/04 ▸ 08/07	2035000854	**•818200**	628 371	AL
C200CDI,C220CDI	D	2148	646.962,646.963	+	01/04 ▸ 02/08	2035000854	**•818200**	628 371	AL
C270CDI	D	2685	612.962	+	01/04 ▸ 07/05	2035000854	**•818200**	628 371	AL
C270CDI	D	2685	612.962		05/04 ▸ 07/05	2035001654	**•814368**	628 371	AL
C270CDI	D	2685	612.962	+ R134	01/04 ▸ 07/05	2035001354	**817849**	648 371	AL
C30CDI	D	2950	612.990	+ R134	01/04 ▸	2035001354	**817849**	648 371	AL
C30CDI	D	2950	612.990	+	01/04 ▸ 08/07	2035000854	**•818200**	628 371	AL
C30CDI	D	2950	612.990		05/04 ▸ 02/08	2035001654	**•814368**	628 371	AL
C320CDI	D	2987	642.910	+ R134	07/05 ▸	2035001354	**817849**	648 371	AL
C320CDI	D	2987	642.910	+	07/05 ▸ 08/07	2035000854	**•818200**	628 371	AL
CLK (208)									
CLK200 i, CLK200K i	E	1998	111.944/5, 111956		06/97 ▸	2028300970	**817562**	595 411	AL

• **New** Nouveau **Neu** Nuevo **Novo** Nuovo **Nieuw** Nowi **Новый** Novy **Nou** Yeni **Νέους**

⏭ **Multi-product Crosslist on section 1** Cross List Multi-produits, Section 1
Crossliste siehe Kapitel 1 Crosslist Multiproducto en la sección 1
Lista Multi-produto na secção 1 Cross-list Multi prodotto nella sezione 1
Rubriek 1 : Cross list "alle produkten" Kombinovaný převodník v sekci 1
Crosslist multi-produse, secţie 1 **Çoklu ürün çapraz listesi bölüm 1 tedir**
Αντιστοιχίες προϊόντων στο κεφάλαιο 1

		CC				OE	Valeo	DIM	TECH
MERCEDES (.../...)									
CLK (208) (.../...)									
CLK230K i	E	2295	111975, 111982		06/97 ▸	2028300970	**817562**	595 411	AL
CLK320 i	E	3199	112.940		06/97 ▸	2028300970	**817562**	595 411	AL
CLK430 i	E	4266	113.943		06/98 ▸	2028300970	**817562**	595 411	AL
CLK55 AMG i	E	5439	113.984		06/99 ▸ 06/02	2028300970	**817562**	595 411	AL
CLK (209)									
CLK 200,CLK 200 i	E	1796	271.940,271.942	+/	03/02 ▸ 04/06	2035000854	**•818200**	628 371	AL
CLK 240 i	E	2597	112.912	+/	03/02 ▸ 05/05	2035000854	**•818200**	628 371	AL
CLK 280 i	E	2996	272.940	+/	01/05 ▸ 04/06	2035000854	**•818200**	628 371	AL
CLK 320 i	E	3199	112.955	+/	03/02 ▸ 05/05	2035000854	**•818200**	628 371	AL
CLK 350 i	E	3498	272.960	+/	01/05 ▸ 04/06	2035000854	**•818200**	628 371	AL
CLK 500 i	E	4966	113.968	+/	03/02 ▸ 04/06	2035000854	**•818200**	628 371	AL
CLK 55 AMG i	E	5439	113.987	+/	03/02 ▸ 04/06	2035000854	**•818200**	628 371	AL
CLK 63 AMG i	E	6208	156.982	+/	04/06 ▸ 04/06	2035000854	**•818200**	628 371	AL
CLK 220 CDI	D	2148	646.966	+/	06/05 ▸ 04/06	2035000854	**•818200**	628 371	AL
CLK 270 CDI	D	2685	612.967	+/	03/02 ▸ 05/05	2035001354	**817849**	648 371	AL
CLK 270 CDI	D	2685	612.967	+/	03/02 ▸ 05/05	2035000854	**•818200**	628 371	AL
CLK 320 CDI	D	2987	642.910	+/	06/05 ▸ 04/06	2035000854	**•818200**	628 371	AL
CLS (2004>2010)									
CLS350 i	E	3498	272.964,272.985	+/ R134	07/04 ▸ 01/08	2115001154	**818003**	593 437	AL
CLS500 i	E	4966	113.967	+/ R134	07/04 ▸ 01/08	2115000154	**818003**	593 437	AL
CLS55 i	E	5439	113.990	+/ R134	01/05 ▸ 01/08	2115001154	**818003**	593 437	AL
CLS 320CDI CDI	D	2987	642.920	+/ R134	06/05 ▸ 01/08	2115001154	**818003**	593 437	AL
CLS (218) (2010>)									
4.7 ti V8-408 32V	E	4663	278.922	+/ R134	01/11 ▸	2115001154	**818003**	593 437	AL
E CLASS (210)									
E200 i ▸ 394035	E	1998	111.942		04/95 ▸ 06/99	2028300870	**816900**	570 400	AL
E200 i	E	1998	111.942		04/95 ▸ 03/03	2108300570	**817252**	620 481	AL
E200 i, E200L i	E	1998	111947, 111957	R12>R134a	04/95 ▸ 03/03	2108300370	**816949**	580 330	AL
E200 i	E	1998	111.942		06/99 ▸ 03/03	2028300970	**817562**	595 411	AL
E230 i ▸ 394035	E	2295	111.970		04/95 ▸ 06/99	2028300870	**816900**	570 400	AL
E230 i 394036 ▸	E	2295	111.970		04/95 ▸ 06/99	2028300970	**817562**	595 411	AL
E230 i	E	2295	111.970		04/95 ▸ 06/99	2108300570	**817252**	620 481	AL
E240 i	E	2398	112.911		04/95 ▸ 03/03	2108300570	**817252**	620 481	AL
E240 i	E	2597	112.914		05/00 ▸ 03/03	2108300570	**817252**	620 481	AL
E280 i, E280L i	E	2799	104945, 112921		04/95 ▸ 03/03	2108300570	**817252**	620 481	AL
E320 i	E	3199	104995, 112941		04/95 ▸ 03/03	2108300570	**817252**	620 481	AL
E420 i	E	4196	119.985		04/95 ▸ 06/99	2108300570	**817252**	620 481	AL
E430 i	E	4266	113.940		03/96 ▸ 03/03	2108300570	**817252**	620 481	AL
E50 AMG i	E	4973	119.AMG		03/96 ▸ 06/99	2108300570	**817252**	620 481	AL
E55 AMG i	E	5439	113.980		03/96 ▸ 03/02	2108300570	**817252**	620 481	AL
E200D	D	1998	604.917		04/95 ▸ 06/99	2108300570	**817252**	620 481	AL
E200CDI, E220CDI	D	2148	611.961	R12>R134a	03/96 ▸ 03/03	2108300370	**816949**	580 330	AL
E220D	D	2155	604.912		04/95 ▸ 06/99	2108300570	**817252**	620 481	AL
E250D, E250DL	D	2497	605.912		04/95 ▸ 06/99	2108300570	**817252**	620 481	AL
E250TD	D	2497	605.962		04/95 ▸ 06/99	2108300470	**817235**	600 319	AL
E270CDI	D	2685	612.961		06/99 ▸ 03/03	2108300470	**817235**	600 319	AL
E290TD, E290TDL	D	2874	602.982	R12>R134a	04/95 ▸ 06/99	2108300370	**816949**	580 330	AL
E300D	D	2996	606.912		04/95 ▸ 06/99	2108300570	**817252**	620 481	AL
E300TD	D	2996	606.962		04/95 ▸ 06/99	2108300470	**817235**	600 319	AL
E320CDI	D	3224	613.961		06/99 ▸ 03/03	2108300470	**817235**	600 319	AL
E CLASS (211)									
E 200 i	E	1796	271.941	+/ R134	09/02 ▸	2115001254	**818003**	593 437	AL

Valeo recommends replacing the receiver drier with the condenser
Pensez à changer la bouteille déshydratante avec le condenseur
Denken Sie daran, beim Wechsel des Kondensators auch den Trockner zu erneuern
Piense en la sustitución del filtro deshidratante con el condensador
A Valeo recomenda substituir o filtro desidratante com o condensador
Ricordatevi di sostituire il filtro disidratatore insieme al condensatore
Bij de vervanging van de condensor, vervang tevens de filter-droger
Valeo zaleca wymianę filtra osuszacza wraz ze skraplaczem
Рекомендируем замену осушителя вместо с конденсором
Spolu s kondenzátorem je nutné vyměnit také vysoušeč
Nu uitați sa schimbați uscatorul cu condensatorul
Kondenser değişimlerinde nem alıcının da değiştirilmesi gerektiğini dikkate alınız
Πρέπει να αντικαταστήσετε το φίλτρο υγρού μαζί με το συμπυκνωτή

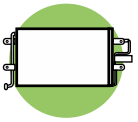

		CC				OE	Valeo	DIM	TECH
MERCEDES (.../...)									
E CLASS (211) (.../...)									
E 240 i	E	2597	112913, 112917	+/ R134	03/02 ▸ 06/05	2115001254	**818003**	593 437	AL
E 320 i	E	3199	112949, 112954	+/ R134	03/02 ▸	2115001254	**818003**	593 437	AL
E 350 i	E	3498	272964, 272972	+/ R134	07/04 ▸	2115001254	**818003**	593 437	AL
E 500 i	E	4966	113967, 113969	+/ R134	03/02 ▸	2115001254	**818003**	593 437	AL
E 55 AMG i	E	5439	113.990	+/ R134	07/02 ▸	2115001254	**818003**	593 437	AL
E 200 CDI, E 220 CDI	D	2148	646951, 646961	+/ R134	03/02 ▸	2115001254	**818003**	593 437	AL
E 270 CDI	D	2685	647.961	+/ R134	03/02 ▸ 05/05	2115001254	**818003**	593 437	AL
E 280 CDI, E 320 CDI	D	3222	648.961	+/ R134	03/02 ▸ 05/05	2115001254	**818003**	593 437	AL
E 400 CDI, E 420 CDI	D	3996	628961, 629,91	+/ R134	03/04 ▸	2115001254	**818003**	593 437	AL
M CLASS (163)									
ML230 i	E	2295	111.977		10/97 ▸	1638300170	**817458**	518 531	AL
ML320 i	E	3199	112.942		05/97 ▸ 08/02	1638300170	**817458**	518 531	AL
ML350 i	E	3724	112.970		09/00 ▸	1638300170	**817458**	518 531	AL
ML430 i	E	4266	113.942		03/98 ▸	1638300170	**817458**	518 531	AL
ML500 i	E	4966	113.965		09/00 ▸	1638300170	**817458**	518 531	AL
ML55 AMG i	E	5439	113.981		09/99 ▸	1638300370	**817446**	535 521	AL
ML270CDI	D	2668	612.963		07/99 ▸	1638300170	**817458**	518 531	AL
ML400CDI	D	3996	628.963		09/00 ▸	1638300370	**817446**	535 521	AL
S CLASS (220)									
S280 i	E	2799	112.922	+/ R134	03/99 ▸	2205000054	**818003**	593 437	AL
S320 i, S320L i	E	3199	112.944	+/ R134	09/98 ▸	2205000054	**818003**	593 437	AL
S430 i, S430L i	E	4266	113.941	+/ R134	09/98 ▸	2205000054	**818003**	593 437	AL
S500 i, S500L i	E	4966	113.960	+/ R134	09/98 ▸	2205000054	**818003**	593 437	AL
SL (230)									
SL55 AMG i	E	5439	113.993	+	11/05 ▸ 01/08	2035001354	**817849**	648 371	AL
SLK (R170)									
SLK200 i, SLK200K i	E	1998	111943, 111946		08/96 ▸ 03/00	2028300970	**817562**	595 411	AL
SLK230K i	E	2295	111.973		08/96 ▸ 03/00	2028300970	**817562**	595 411	AL
SLK (171)									
3.0 i V6 24V	E	2996	272.940	+	04/06 ▸ 12/07	1715000154	**814186**	668 371	AL
3.0 i V6 24V	E	2996	272.942	+	01/08 ▸	1715000154	**814186**	668 371	AL
3.5 i V6 24V	E	3498	272.969	+	01/08 ▸	1715000154	**814186**	668 371	AL
V CLASS (638/2)									
V200	E	1998	111.948		10/96 ▸ 12/02	6388350170	**817011**	490 550	AL
V230	E	2295	111.978		10/96 ▸ 12/02	6388350170	**817011**	490 550	AL
V280	E	2799	104.900		10/96 ▸ 12/02	6388350170	**817011**	490 550	AL
V220 CDI, V200 CDI	D	2151	611.980		01/99 ▸ 12/02	6388350170	**817011**	490 550	AL
V230TD	D	2299	601.970		10/96 ▸ 12/02	6388350170	**817011**	490 550	AL
VANEO (414)									
1.6 i	E	1598	166961, 166,82	+/ R134	10/01 ▸	4145000054	**817841**	538 381	AL
1.6 i ▸220646	E	1598	166.960,166.961	+/ R134	10/01 ▸	1685000854	**817659**	538 381	AL
1.6 i	E	1598	166.960,166.961	+/ R134	10/01 ▸ 07/05	1685000454	**817504**	538 381	AL
1.7 CDI	D	1689	668.914	+/ R134	10/01 ▸	4145000054	**817841**	538 381	AL
1.7 CDI	D	1689	668.914	+/ R134	10/01 ▸ 07/05	1685000454	**817504**	538 381	AL
1.7 CDI ▸220646	D	1689	668.914	+/ R134	10/01 ▸	1685000854	**817659**	538 381	AL
1.9 i	E	1898	166.991	+/ R134	10/01 ▸	4145000054	**817841**	538 381	AL
1.9 i ▸220646	E	1898	166.991	+/ R134	10/01 ▸	1685000854	**817659**	538 381	AL
1.9 i	E	1898	166.991	+/ R134	10/01 ▸ 07/05	1685000454	**817504**	538 381	AL

• **New** Nouveau **Neu** Nuevo **Novo** Nuovo **Nieuw** Nowi **Новый** Novy **Nou** Yeni **Νέους**

⏭ **Multi-product Crosslist on section 1** Cross List Multi-produits, Section 1
Crossliste siehe Kapitel 1 Crosslist Multiproducto en la sección 1
Lista Multi-produto na secção 1 Cross-list Multi prodotto nella sezione 1
Rubriek 1 : Cross list "alle produkten" Kombinovaný převodník v sekci 1
Crosslist multi-produse, secţie 1 **Çoklu ürün çapraz listesi bölüm 1 tedir**
Αντιστοιχίες προϊόντων στο κεφάλαιο 1

		CC				OE	Valeo	DIM	TECH
MERCEDES									
SPRINTER (95>2006)									
2.3 i	E	2295	111.979		02/95 ▸ 01/06	9015000554	**816891**	630 376	AL
2.3 D	D	2299	601.943		02/95 ▸ 01/06	9015000554	**816891**	630 376	AL
2.9 D	D	2874	602.980		02/95 ▸ 01/06	9015000554	**816891**	630 376	AL
SPRINTER (2006>)									
3.5 i	E	3498	272.979	R134	02/06 ▸	9065000054	**818173**	679 461	AL
2.2 D	D	2148	646.984	R134	02/06 ▸	9065000054	**818173**	679 461	AL
3.0 D	D	2987	642.992	R134	02/06 ▸	9065000054	**818173**	679 461	AL
VIANO									
3.2 i	E	3199	112.951	R134	01/03 ▸	6398350070	**817842**	658 391	AL
3.7 i	E	3724	112.976	R134	06/04 ▸	6398350070	**817842**	658 391	AL
2.0 CDI, 2.2 CDI	D	2148	646.982	R134	01/03 ▸	6398350070	**817842**	658 391	AL
VITO (96>2003)									
2.0 i	E	1998	111.948		01/96 ▸ 09/03	6388350170	**817011**	490 550	AL
2.2 CDI	D	2151	611.980		03/99 ▸ 09/03	6388350170	**817011**	490 550	AL
2.3 D, 2.3 TD	D	2299	601942, 601.97		01/96 ▸ 09/03	6388350170	**817011**	490 550	AL
VITO (2003>)									
3.2 i	E	3199	112.951	R134	01/03 ▸	6398350070	**817842**	658 391	AL
3.7 i	E	3724	112.976	R134	06/04 ▸	6398350070	**817842**	658 391	AL
2.2 CDI	D	2148	646982, 646983	R134	01/03 ▸	6398350070	**817842**	658 391	AL
MERCEDES									
ACTROS 1996									
1843 AK / L / LS / S	D	11946	OM 541		09/96 ▸ 10/02	9425000054	**818034**	686 458	AL
1843 AK / L / LS / S	D	11946	OM 541		09/96 ▸ 10/02	9425000054	**818034**	686 458	AL
1848 AK / K / L / LS / S	D	15928	OM 542		09/96 ▸ 10/02	9425000054	**818034**	686 458	AL
1853 L / LS / S	D	15928	OM 542		09/96 ▸ 10/02	9425000054	**818034**	686 458	AL
1853 L / LS / S	D	15928	OM 542		09/96 ▸ 10/02	9425000054	**818034**	686 458	AL
1857 L / LS	D	15928	OM 542		09/96 ▸ 10/02	9425000054	**818034**	686 458	AL
2543 L / LS	D	11946	OM 541		09/96 ▸ 10/02	9425000054	**818034**	686 458	AL
2543 L / LS	D	11946	OM 541		09/96 ▸ 10/02	9425000054	**818034**	686 458	AL
2548 L / LS	D	15928	OM 542		09/96 ▸ 10/02	9425000054	**818034**	686 458	AL
2553 L / LS	D	15928	OM 542		09/96 ▸ 10/02	9425000054	**818034**	686 458	AL
2553 L / LS	D	15928	OM 542		09/96 ▸ 10/02	9425000054	**818034**	686 458	AL
2557 LS	D	15928	OM 542		09/96 ▸ 10/02	9425000054	**818034**	686 458	AL
2643 K / L / LK / LS / S	D	11946	OM 541		04/97 ▸ 10/02	9425000054	**818034**	686 458	AL
2643 K / L / LK / LS / S	D	11946	OM 541		04/97 ▸ 10/02	9425000054	**818034**	686 458	AL
2648 K / L / LK / LS / S	D	15928	OM 542		09/96 ▸ 10/02	9425000054	**818034**	686 458	AL
2653 K / L / LK / LS / S	D	15928	OM 542		09/96 ▸ 10/02	9425000054	**818034**	686 458	AL
2653 K / L / LK / LS / S	D	15928	OM 542		09/96 ▸ 10/02	9425000054	**818034**	686 458	AL
2657 K / L / LK / LS	D	15928	OM 542		09/96 ▸ 10/02	9425000054	**818034**	686 458	AL
3243 B / K	D	11946	OM 541		04/97 ▸ 10/02	9425000054	**818034**	686 458	AL
3243 B / K	D	11946	OM 541		04/97 ▸ 10/02	9425000054	**818034**	686 458	AL
3343 AK / AS / K / S	D	11946	OM 541		04/97 ▸ 10/02	9425000054	**818034**	686 458	AL
3343 AK / AS / K / S	D	11946	OM 541		04/97 ▸ 10/02	9425000054	**818034**	686 458	AL
3348 K / S	D	15928	OM 542		09/96 ▸ 10/02	9425000054	**818034**	686 458	AL
3353 S	D	11946	OM 542		09/96 ▸ 10/02	9425000054	**818034**	686 458	AL
3353 S	D	11946	OM 542		09/96 ▸ 10/02	9425000054	**818034**	686 458	AL
3357	D	11946	OM 542		09/96 ▸ 10/02	9425000054	**818034**	686 458	AL
3357	D	11946	OM 542		09/96 ▸ 10/02	9425000054	**818034**	686 458	AL
4143 AK / K	D	11946	OM 541		04/97 ▸ 10/02	9425000054	**818034**	686 458	AL
4143 AK / K	D	11946	OM 541		04/97 ▸ 10/02	9425000054	**818034**	686 458	AL
ACTROS 1997									
2032 AK	D	11946	OM 541		04/03 ▸	9425000154	**818034**	686 458	AL

Valeo recommends replacing the receiver drier with the condenser
Pensez à changer la bouteille déshydratante avec le condenseur
Denken Sie daran, beim Wechsel des Kondensators auch den Trockner zu erneuern
Piense en la sustitución del filtro deshidratante con el condensador
A Valeo recomenda substituir o filtro desidratante com o condensador
Ricordatevi di sostituire il filtro disidratatore insieme al condensatore
Bij de vervanging van de condensor, vervang tevens de filter-droger
Valeo zaleca wymianę filtra osuszacza wraz ze skraplaczem
Рекомендируем замену осушителя вместо с конденсором
Spolu s kondenzátorem je nutné vyměnit také vysoušeč
Nu uitați sa schimbați uscatorul cu condensatorul
Kondenser değişimlerinde nem alıcının da değiştirilmesi gerektiğini dikkate alınız
Πρέπει να αντικαταστήσετε το φίλτρο υγρού μαζί με το συμπυκνωτή

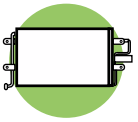

		CC				OE	Valeo	DIM	TECH
MERCEDES (.../...)									
ACTROS 1997 (.../...)									
3348 K / S	D	15928	OM 542		04/03 ▸	9425000154	**818034**	686 458	AL
ATEGO I									
1017 A / AK / L	D	4250	OM 904LA		09/97 ▸	9705000054	**818035**	500 537	AL
1017 A / AK / L	D	4250	OM 904LA		09/97 ▸	9705000054	**818035**	500 537	AL
1215 K / L	D	4250	OM 904LA		09/97 ▸	9705000054	**818035**	500 537	AL
1215 K / L	D	4250	OM 904LA		09/97 ▸	9705000054	**818035**	500 537	AL
1217 K / KO / L	D	4250	OM 904LA		09/97 ▸	9705000054	**818035**	500 537	AL
1217 K / KO / L	D	4250	OM 904LA		09/97 ▸	9705000054	**818035**	500 537	AL
1317 A / AK / KO / L	D	4250	OM 904LA		09/97 ▸	9705000054	**818035**	500 537	AL
1317 A / AK / KO / L	D	4250	OM 904LA		09/97 ▸	9705000054	**818035**	500 537	AL
1517 A / K / L	D	4250	OM 904LA		09/97 ▸	9705000054	**818035**	500 537	AL
1517 A / K / L	D	4250	OM 904LA		09/97 ▸	9705000054	**818035**	500 537	AL
712	D	4250	OM 904LA		09/97 ▸	9705000054	**818035**	500 537	AL
712	D	4250	OM 904LA		09/97 ▸	9705000054	**818035**	500 537	AL
715 L	D	4250	OM 904LA		09/97 ▸	9705000054	**818035**	500 537	AL
715 L	D	4250	OM 904LA		09/97 ▸	9705000054	**818035**	500 537	AL
812	D	4250	OM 904LA		09/97 ▸	9705000054	**818035**	500 537	AL
812	D	4250	OM 904LA		09/97 ▸	9705000054	**818035**	500 537	AL
815 F / K / L	D	4250	OM 904LA		09/97 ▸	9705000054	**818035**	500 537	AL
815 F / K / L	D	4250	OM 904LA		09/97 ▸	9705000054	**818035**	500 537	AL
817 K / L	D	4250	OM 904LA		09/97 ▸	9705000054	**818035**	500 537	AL
817 K / L	D	4250	OM 904LA		09/97 ▸	9705000054	**818035**	500 537	AL
917 AF / K / KO / L	D	4250	OM 904LA		09/97 ▸	9705000054	**818035**	500 537	AL
917 AF / K / KO / L	D	4250	OM 904LA		09/97 ▸	9705000054	**818035**	500 537	AL
ATEGO II									
1328/1528	D	6370	OM 906LA		03/98 ▸	9705000054	**818035**	500 537	AL
1828 A / AK / L / LS	D	6370	OM 906LA		09/97 ▸	9705000054	**818035**	500 537	AL
1828 A / AK / L / LS	D	6370	OM 906LA		09/97 ▸	9705000054	**818035**	500 537	AL
2528 L	D	6370	OM 906LA		09/97 ▸	9705000054	**818035**	500 537	AL
2528 L	D	6370	OM 906LA		09/97 ▸	9705000054	**818035**	500 537	AL
2628	D	6370	OM 906LA		09/97 ▸	9705000054	**818035**	500 537	AL
2628	D	6370	OM 906LA		09/97 ▸	9705000054	**818035**	500 537	AL
823/1023/1223/1523	D	6370	OM 906LA		03/98 ▸	9705000054	**818035**	500 537	AL
917/1017/1217/1517	D	6370	OM 906LA		03/98 ▸	9705000054	**818035**	500 537	AL
MINI									
MINI									
1.6 i 16V	E	1598	W10B16A-90/115 W11B16A-163/170	+/ R134	09/01 ▸	64531490572	**817547**	590 315	AL
1.4 d	D	1364	1ND	+/ R134	05/03 ▸	64536918597	**817837**	480 361	AL
MITSUBISHI									
CARISMA (95>99)									
1.6 i	E	1597	4G92-21,4G92-21L 4G92-21S,4G92-23	R134	05/95 ▸ 02/99	MB958166	**•817789**	605 333	AL
1.8 GDI 16V,1.8 i 16V	E	1834	4G93-21,4G93-23,4G93-41 4G93-G10,4G93-G30	R134	05/95 ▸ 02/99	MB958166	**•817789**	605 333	AL
1.9 TD	D	1870	F8Q		05/96 ▸ 02/99	CAB311B080	**817560**	608 351	AL
CARISMA (99>)									
1.6 i,1.6 i 16V	E	1597	4G92-103,4G92-28Q 4G92-28R,4G92-2ML	R134	03/99 ▸ 12/03	MB958166	**•817789**	605 333	AL
1.8 i 16V	E	1834	4G93-G36,4G93-G82 4G93-G83	R134	03/99 ▸ 08/99	MB958166	**•817789**	605 333	AL
1.9 DI-D	D	1870	F9Q1	+/ R134	03/99 ▸ 12/03	MR513110	**817790**	635 478	AL
COLT (91>96)									
1.6	E	1597	4G92		12/91 ▸ 12/96	MB657967	**814240**	624 318	AL

• **New** Nouveau **Neu** Nuevo **Novo** Nuovo **Nieuw** Nowi **Новый** Novy **Nou** Yeni **Νέους**

⏭ **Multi-product Crosslist on section 1** Cross List Multi-produits, Section 1
Crossliste siehe Kapitel 1 Crosslist Multiproducto en la sección 1
Lista Multi-produto na secção 1 Cross-list Multi prodotto nella sezione 1
Rubriek 1 : Cross list "alle produkten" Kombinovaný převodník v sekci 1
Crosslist multi-produse, secţie 1 **Çoklu ürün çapraz listesi bölüm 1 tedir**
Αντιστοιχίες προϊόντων στο κεφάλαιο 1

		CC				OE	Valeo	DIM	TECH
MITSUBISHI (.../...)									
COLT (91>96) (.../...)									
1.8 16V	E	1834	4G93-1		12/91 ▸ 12/96	MB657967	**814240**	624 318	AL
COLT (96>)									
1300 (CJ1A)	E	1299	4G13		05/96 ▸ 09/00	MR218428	**814303**	622 288	AL
1500 (CJ2A)	E	1468	4G15		01/96 ▸ 07/05	MR218428	**814303**	622 288	AL
1600 (CJ4A)	E	1597	4G92		05/96 ▸ 09/00	MR218428	**814303**	622 288	AL
GALANT (92>96)									
1.8	E	1834	4G93-0,4G93-0M3		11/92 ▸ 08/95	MB813733	**818081**	634 328	AL
2.0 16V,2.0 24V,2.0 V6 24V	E	1997	4G63-6B,4G63-6M,6A12-0		11/92 ▸ 08/95	MB813733	**818081**	634 328	AL
2.5 V6 24V	E	2497	6G73		11/92 ▸ 08/95	MB813733	**818081**	634 328	AL
2.0 TD	D	1998	4D68T-1		11/92 ▸ 08/95	MB813733	**818081**	634 328	AL
GALANT (96>2003)									
2.0 i 16V	E	1997	4G63-6,4G63-6G,4G63-6GR 4G63-6M,4G63-6T		10/96 ▸ 05/03	MR513005	**814260**	651 328	AL
2.4 GDI,2.4 i	E	2351	4G64-41,4G64-41B 4G64-41R,4G64-43		12/98 ▸ 05/03	MR513005	**814260**	651 328	AL
2.5 i V6 24V	E	2497	6A13-41,6A13-4B,6A13-4E 6A13-4F		10/96 ▸ 05/03	MR513005	**814260**	651 328	AL
2.0 TD	D	1998	4D68-4E,4D68-4E0		10/96 ▸ 02/00	MR513005	**814260**	651 328	AL
LANCER (92>96)									
1.3	E	1299	4G13-2J		12/93 ▸ 12/96	MB657967	**814240**	624 318	AL
1.6 i	E	1597	4G92-01,4G92-0G,4G92-0H		06/92 ▸ 2000	MB657967	**814240**	624 318	AL
1.8 16V	E	1834	4G93-1		05/92 ▸ 12/96	MB657967	**814240**	624 318	AL
2.0 D	D	1998	4D68-0A,4D68-0E		05/92 ▸ 12/96	MB657967	**814240**	624 318	AL
LANCER (96>)									
1.3	E	1299	4G13		06/96 ▸	MR218428	**814303**	622 288	AL
1.6 16V	E	1597	4G92		06/96 ▸	MR218428	**814303**	622 288	AL
2,0 D	D	1998	4D68		06/96 ▸	MR218428	**814303**	622 288	AL
LANCER (2003>)									
1.3 16V	E	1299	4G13-6	+/ R134	06/03 ▸	MN151100	**814273**	675 334	AL
1.6 i 16V	E	1584	4G18-6	+/ R134	06/03 ▸	MN151100	**814273**	675 334	AL
2.0 i 16V	E	1997	4G63-7	+/ R134	06/03 ▸	MN151100	**814273**	675 334	AL
1.3 i	E	1299	4G13		09/03 ▸	MN134204	**814272**	675 334	AL
1.6 i	E	1584	4G18		09/03 ▸	MN134204	**814272**	675 334	AL
1.8 Sei	E	1834	4G93		09/03 ▸	MN134204	**814272**	675 334	AL
2.0 i	E	1997	4G63		09/03 ▸	MN134204	**814272**	675 334	AL
LANCER (2007>)									
1.5 MIVEC 16V	E	1499	4A91	+/ R134	03/07 ▸	7812A030	**814315**	616 407	AL
1.8 MIVEC 16V	E	1798	4B10	+/ R134	01/08 ▸	7812A030	**814315**	616 407	AL
2.0 MIVEC 16V	E	1998	4B11	+/ R134	03/07 ▸	7812A030	**814315**	616 407	AL
2.0 MIVEC 16V	E	1999	4B11-T/C	+/ R134	06/08 ▸	7812A204	**814315**	616 407	AL
2.0 DI-D 16V	D	1968	BSY,BSY/F	+/ R134	06/07 ▸ 06/10	7812A030	**814315**	616 407	AL
LANCER EVOLUTION									
2.0 i Turbo	E	1997	4G63-7TC,4G63-7Z1	+/ R134	12/00 ▸ 07/07	MN151100	**814273**	675 334	AL
2.0 MIVEC Turbo 16V	E	1998	4B11	+/ R134	07/09 ▸	7812A204	**814315**	616 407	AL
LANCER SPORTBACK (CX) (2008>)									
1.8 MIVEC 16V	E	1798	4B10	+/ R134	07/08 ▸	7812A030	**814315**	616 407	AL
2.0 DI-D 16V	D	1968	BSY,BSY/F	+/ R134	08/08 ▸ 06/10	7812A030	**814315**	616 407	AL
MONTERO SPORT									
3.0 i V6 24V	E	2972	6G72-8-GG	+/ R134	08/98 ▸ 02/09	MR513110	**817790**	635 478	AL

Valeo recommends replacing the receiver drier with the condenser
Pensez à changer la bouteille déshydratante avec le condenseur
Denken Sie daran, beim Wechsel des Kondensators auch den Trockner zu erneuern
Piense en la sustitución del filtro deshidratante con el condensador
A Valeo recomenda substituir o filtro desidratante com o condensador
Ricordatevi di sostituire il filtro disidratatore insieme al condensatore
Bij de vervanging van de condensor, vervang tevens de filter-droger

Valeo zaleca wymianę filtra osuszacza wraz ze skraplaczem
Рекомендируем замену осушителя вместо с конденсором
Spolu s kondenzátorem je nutné vyměnit také vysoušeč
Nu uitați sa schimbați uscatorul cu condensatorul
Kondenser değişimlerinde nem alıcının da değiştirilmesi gerektiğini dikkate alınız
Πρέπει να αντικαταστήσετε το φίλτρο υγρού μαζί με το συμπυκνωτή

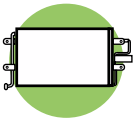

		CC				OE	Valeo	DIM	TECH
MITSUBISHI (.../...)									
MONTERO SPORT (.../...)									
2.5 TD	D	2477	4D56T-4P	+/ R134	08/98 ▸ 02/09	MN123332	**817790**	635 478	AL
OUTLANDER (2006>)									
2.4 MIVEC 16V,2.4 i 16V	E	2360	4B12	+/ R134	06/07 ▸	7812A030	**814315**	616 407	AL
3.0 V6	E	2998	6B31	+/ R134	11/06 ▸ 05/09	7812A030	**814315**	616 407	AL
2.0 DI-D	D	1968	BSY,BSY/F	+/ R134	11/06 ▸	7812A204	**814315**	616 407	AL
2.2 DI-D 16V	D	2179	DW12	+/ R134	08/07 ▸	7812A030	**814315**	616 407	AL
PAJERO PININ (99>2005)									
1.8 GDI 16V,1.8 i 16V	E	1834	4G93-D,4G93-H	R134	08/99 ▸ 02/05	MR460343	•**817791**	686 302	AL
2.0 GDI 16V	E	1999	4G94-H	R134	07/00 ▸ 02/05	MR460343	•**817791**	686 302	AL
PAJERO III (2000>2006)									
3.5 GDI V6 24V	E	3497	6G74-B	+/ R134	02/00 ▸ 05/04	MN123332	**817790**	635 478	AL
2.5 TD	D	2477	4D56T-4,4D56T-5	+/ R134	02/00 ▸ 08/06	MN123332	**817790**	635 478	AL
3.2 DI-D	D	3200	4M41,4M410A	+/ R134	02/00 ▸ 08/06	MN123332	**817790**	635 478	AL
PAJERO SPORT (98>2009)									
2.5 TD	D	2477	4D56T-4P,4D56T-4P-115	+/ R134	08/98 ▸ 02/09	MR513110	**817790**	635 478	AL
3.0 i V6 24V	E	2972	6G72-8-GG	+/ R134	08/98 ▸ 05/00	MR513110	**817790**	635 478	AL
SHOGUN 3									
3.5 GDI V6 24V	E	3497	6G74-B	+/ R134	02/00 ▸ 05/04	MN123332	**817790**	635 478	AL
2.5 TD	D	2477	4D56T	+/ R134	02/00 ▸ 05/04	MN123332	**817790**	635 478	AL
3.2 DI-D	D	3200	4M410A	+/ R134	07/00 ▸ 08/06	MN123332	**817790**	635 478	AL
SPACE RUNNER									
1.8 i	E	1834	4G93,4G93-OM3		06/91 ▸ 05/99	MR116930	**818081**	634 328	AL
2.4 GDi	E	2351	4G64-414		05/99 ▸ 2002	MR116930	**818081**	634 328	AL
2.0 TD	D	1998	4D68T		06/92 ▸ 2002	MR116930	**818081**	634 328	AL
SPACE STAR									
1.3 i 16V	E	1299	4G13-16	R134	06/98 ▸ 12/98	MB958166	•**817789**	605 333	AL
1.8 GDi 16V	E	1834	4G93-H	R134	10/98 ▸ 05/99	MB958166	•**817789**	605 333	AL
1.9 DI-D	D	1870	F9Q1, F9Q2		06/00 ▸	CAB311B080	**817560**	608 351	AL
SPACE WAGON (98>)									
2.0 i	E	1997	4G63-MPI	+/ R134	06/00 ▸ 01/04	MR996738	**814262**	710 428	AL
2.4 GDi	E	2351	4G64-2,4G64-412,4G64-414 4G64-481	+/ R134	07/98 ▸ 01/04	MR996738	**814262**	710 428	AL
MITSUBISHI									
L 200 II (K84T) (2006>)									
2.5 DI-D,2.5 TD,2.5 TD Hi-Power	D	2477	4D56	+/ R134	01/06 ▸	7812A171	**814214**	467 434	AL
NISSAN									
ALMERA (95>2000)									
1.4 i 16V	E	1392	GA14DE	R134	07/95 ▸ 06/96	921102M112	**817792**	654 268	AL
1.4 i 16V	E	1392	GA14DE	R134	06/96 ▸ 11/97	921102M117	**817794**	654 268	AL
1.6 i 16V	E	1597	GA16DE	R134	07/95 ▸ 06/96	921102M112	**817792**	654 268	AL
1.6 i 16V	E	1597	GA16DE	R134	06/96 ▸ 11/97	921102M117	**817794**	654 268	AL
2.0 i 16V	E	1998	SR20DEB	R134	06/96 ▸ 11/97	921102M117	**817794**	654 268	AL
2.0 i 16V	E	1998	SR20DEB	R134	04/96 ▸ 06/96	921102M112	**817792**	654 268	AL
2.0 D	D	1974	CD20	R134	06/96 ▸ 11/97	921102M117	**817794**	654 268	AL
2.0 D	D	1974	CD20	R134	07/95 ▸ 06/96	921102M112	**817792**	654 268	AL
ALMERA (2000>2003)									
1.5 i 16V	E	1497	QG15DE		02/00 ▸ 01/03	92110BM405	**817819**	694 318	AL

• **New** Nouveau **Neu** Nuevo **Novo** Nuovo **Nieuw** Nowi **Новый** Novy **Nou** Yeni **Νέους**

⏭ **Multi-product Crosslist on section 1** Cross List Multi-produits, Section 1
Crossliste siehe Kapitel 1 Crosslist Multiproducto en la sección 1
Lista Multi-produto na secção 1 Cross-list Multi prodotto nella sezione 1
Rubriek 1 : Cross list "alle produkten" Kombinovaný převodník v sekci 1
Crosslist multi-produse, secţie 1 **Çoklu ürün çapraz listesi bölüm 1 tedir**
Αντιστοιχίες προϊόντων στο κεφάλαιο 1

		CC				OE	Valeo	DIM	TECH
NISSAN (.../...)									
ALMERA (2000>2003) (.../...)									
1.8 i 16V	E	1769	QG18DE		02/00 ▸ 01/03	92110BM405	**817819**	694 318	AL
1.8 i	E	1769	QG18DE		03/00 ▸	92100BM400	•**814328**	688 304	AL
1.5 dCi	D	1461	K9K.7	+/ R134	09/02 ▸ 01/03	92100BN900	**817822**	692 308	AL
2.2 TDi 16V,2.2 VDi 16V	D	2184	YD22-110		02/00 ▸ 01/03	92110BM400	**817819**	694 318	AL
2.2 dCi	D	2184	YD22DDT		03/00 ▸	92100BM400	•**814328**	688 304	AL
ALMERA (2003>2006)									
1.5 i 16V	E	1497	QG15DE		02/03 ▸ 11/06	92110BM400	**817819**	694 318	AL
1.8 i 16V	E	1769	QG18DE		02/03 ▸ 11/06	92110BM400	**817819**	694 318	AL
1.5 DCi	D	1461	K9K.7		02/03 ▸ 11/06	92110BM400	**817819**	694 318	AL
1.5 DCi	D	1461	K9K.7	+/ R134	02/03 ▸ 11/06	92100BN900	**817822**	692 308	AL
2.2 DCi 16V	D	2184	YD22DDTI-112,YD22DDTI		02/03 ▸ 11/06	92110BM400	**817819**	694 318	AL
2.2 DCi 16V	D	2184	YD22DDTI	+/ R134	02/03 ▸ 11/06	92100BN900	**817822**	692 308	AL
JUKE									
1.6 i 16V	E	1598	HR16DE	R134	07/10 ▸	92100AX80B	•**817836**	621 342	AL
2.0 i	E		VTEC	+/ R134	07/10 ▸	92110EW80A	**814221**	650 343	AL
MAXIMA QX									
2.0	E	1995	VQ20DE		02/95 ▸ 01/97	921100L710	**814256**	698 368	AL
2.5 V6 24V	E	2496	VQ25DE		02/95 ▸ 08/00	921100L710	**814256**	698 368	AL
3.0 V6 24V	E	2988	VQ30DE		03/00 ▸	921100L710	**814256**	698 368	AL
MICRA (K11) (92>2000)									
1.3 i	E	1275	CG13DE		08/92 ▸ 05/96	9211050B00	**814300**	554 288	AL
1.3 i	E	1275	CG13DE	N/ R134	02/98 ▸ 06/00	921106F600	**817732**	554 278	AL
1.0 i 16V	E	998	CG10DE	N/ R134	08/92 ▸ 06/00	921106F600	**817732**	554 278	AL
1.0 i 16V	E	998	CG10DE		08/92 ▸ 05/96	9211050B00	**814300**	554 288	AL
1.5 D	D	1527	TD15	N/ R134	04/98 ▸ 06/00	921106F600	**817732**	554 278	AL
MICRA (K11) (2000>2002)									
1.4 i 16V	E	1348	CGA3	N/ R134	07/00 ▸ 12/02	921106F600	**817732**	554 278	AL
1.0 i 16V	E	998	CG10DE	N/ R134	07/00 ▸ 12/02	921106F600	**817732**	554 278	AL
1.5 D	D	1527	TD15	N/ R134	07/00 ▸ 12/02	921106F600	**817732**	554 278	AL
MICRA (K12) (2003>2005)									
1.0 i 16V	E	998	CG10DE	R134	01/03 ▸ 05/05	92100AX800	•**817836**	621 342	AL
1.2 i 16V	E	1240	CG12DE	R134	01/03 ▸ 05/05	92100AX800	•**817836**	621 342	AL
1.4 i 16V	E	1386	CGA3DE	R134	01/03 ▸ 05/05	92100AX800	•**817836**	621 342	AL
1.5 dCi	D	1461	K9K.7	R134	01/03 ▸ 05/05	92100AX800	•**817836**	621 342	AL
MICRA (2005>)									
1.2 i 16V	E	1240	CR12DE	R134	06/05 ▸	92100AX80B	•**817836**	621 342	AL
1.4 i 16V	E	1386	CR14DE	R134	06/05 ▸	92100AX80B	•**817836**	621 342	AL
1.6 i 16V	E	1598	HR16DE	R134	11/07 ▸	92100AX80B	•**817836**	621 342	AL
NOTE (2005>)									
1.4 i 16V	E	1386	CR14DE	R134	09/05 ▸	92100AX80B	•**817836**	621 342	AL
1.6 i 16V	E	1598	HR16DE	R134	09/05 ▸	92100AX80B	•**817836**	621 342	AL
PATROL (79>97)									
2.8	E	2753	L28		07/80 ▸ 07/88	92101G9800	**814252**	697 328	AL
2.8 TD	D	2826	RD28TI		05/86 ▸ 06/90	92101G9800	**814252**	697 328	AL
3.2 D, 3.2TD	D	3246	SD33, SD33T		11/79 ▸ 07/88	92101G9800	**814252**	697 328	AL
PRIMERA (P11) (96>2001)									
1.6 i 16V	E	1597	GA16DEB		06/96 ▸ 08/00	921102F000	**817253**	694 301	AL
1.6 i 16V	E	1597	GA16DEB		09/00 ▸ 02/01	921109F515	**817603**	694 301	AL

Valeo recommends replacing the receiver drier with the condenser
Pensez à changer la bouteille déshydratante avec le condenseur
Denken Sie daran, beim Wechsel des Kondensators auch den Trockner zu erneuern
Piense en la sustitución del filtro deshidratante con el condensador
A Valeo recomenda substituir o filtro desidratante com o condensador
Ricordatevi di sostituire il filtro disidratatore insieme al condensatore
Bij de vervanging van de condensor, vervang tevens de filter-droger

Valeo zaleca wymianę filtra osuszacza wraz ze skraplaczem
Рекомендируем замену осушителя вместо с конденсором
Spolu s kondenzátorem je nutné vyměnit také vysoušeč
Nu uitați sa schimbați uscatorul cu condensatorul
Kondenser değişimlerinde nem alıcının da değiştirilmesi gerektiğini dikkate alınız
Πρέπει να αντικαταστήσετε το φίλτρο υγρού μαζί με το συμπυκνωτή

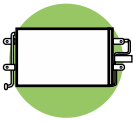

		CC				OE	Valeo	DIM	TECH
NISSAN									
PRIMERA (P11) (96>2001) (.../...)									
1.8 i 16V	E	1769	QG18DE		09/00 ▸ 02/01	921109F515	**817603**	694 301	AL
2.0 i 16V	E	1998	SR20DE, SR20DEC		06/96 ▸ 08/00	921102F000	**817253**	694 301	AL
2.0 i 16V	E	1998	SR20DE, SR20DEC		09/00 ▸ 02/01	921109F515	**817603**	694 301	AL
2.0 TD	D	1974	CD20T		06/96 ▸ 08/00	921102F000	**817253**	694 301	AL
2.0 TD	D	1974	CD20T		09/00 ▸ 02/01	921109F515	**817603**	694 301	AL
PRIMERA (P12) (2001>)									
1.6 i	E	1597	QG16DE		07/02 ▸	92100BM400	**•814328**	688 304	AL
1.8	E	1769	QG18DE		07/02 ▸	92100BM400	**•814328**	688 304	AL
2.2 dCi	D	2184	YD22DDT		07/02 ▸	92100BM400	**•814328**	688 304	AL
2.2 dCi 16V	D	2184	YD22DDT	+/ R134	01/03 ▸ 2006	92100BN900	**817822**	692 308	AL
PRIMERA BREAK (W11) (98>2002)									
1.6 i 16V	E	1597	GA16DEB, GA16DEF		01/98 ▸ 08/00	921102F000	**817253**	694 301	AL
1.6 i 16V	E	1597	GA16DEB, GA16DEF		09/00 ▸ 02/01	921109F515	**817603**	694 301	AL
1.8 i 16V	E	1769	QG18DE		09/00 ▸ 02/01	921109F515	**817603**	694 301	AL
2.0 i 16V	E	1998	SR20DE, SR20DEF		01/98 ▸ 08/00	921102F000	**817253**	694 301	AL
2.0 i 16V	E	1998	SR20DE, SR20DEF		09/00 ▸ 02/01	921109F515	**817603**	694 301	AL
2.0 TD	D	1974	CD20T		01/98 ▸ 08/00	921102F000	**817253**	694 301	AL
2.0 TD	D	1974	CD20T		09/00 ▸ 02/01	921109F515	**817603**	694 301	AL
QASHQAI (2007>2010)									
2.0 i	E	1997	MR20DE	+/ R134	03/07 ▸ 01/10	92100JD200	**814008**	643 400	AL
1.5 dCi	D	1461	K9K-1.5/F,K9K.7.64	+/ R134	03/07 ▸ 01/10	92100JD500	**814009**	643 400	AL
2.0 dCi	D	1995	M9R/F	+/ R134	03/07 ▸ 01/10	92100JD700	**814010**	643 400	AL
SUNNY (Y10) (90>96)									
1.6	E	1597	GA16DS		11/90 ▸ 10/92	9211165Y00	**814275**	643 289	AL
TERRANO (87>95)									
2.4 i	E	2389	Z24I		10/87 ▸ 02/93	9211001G61	**814284**	642 373	AL
3.0 i	E	2960	VG30E		01/90 ▸ 12/95	9211001G61	**814284**	642 373	AL
2.7 TD	D	2664	TD27T		02/89 ▸ 12/95	9211001G61	**814284**	642 373	AL
X-TRAIL (2001>2007)									
2.0 16V,2.0 i 16V	E	1998	QR20DE		09/03 ▸ 03/07	921009H21A	**•814331**	689 365	AL
2.5 i 16V 4x4	E	2488	QR25DE		09/03 ▸ 03/07	921009H21A	**•814331**	689 365	AL
X-TRAIL (2007>)									
2.0 16V	E	1997	MR20DE	+/ R134	03/07 ▸ 07/10	92100JG000	**814231**	644 409	AL
2.5 16V	E	2488	QR25DE	+/ R134	03/07 ▸ 07/10	92100JG000	**814231**	644 409	AL
2.0 dCi 16V	D	1995	M9R/F	+/ R134	03/07 ▸ 07/10	92100JG000	**814231**	644 409	AL
NISSAN									
INTERSTAR									
1.9 dCi	D	1870	F9Q.7.72		09/02 ▸ 01/03	2765000QAF	**817742**	690 376	AL
2.2 dCi	D	2188	G9T.7.22		09/02 ▸ 01/03	2765000QAF	**817742**	690 376	AL
2.5 dCi	D	2463	G9U.7.20		09/02 ▸ 01/03	2765000QAF	**817742**	690 376	AL
KING CAB (D22)									
2.4 i	E	2389	KA24DE,KA24E-1		02/98 ▸ 03/03	92110VJ200	**814304**	698 318	AL
2.5 TDi	D	2488	TD25TI		02/98 ▸ 11/01	92110VJ200	**814304**	698 318	AL
2.5 TD	D	2494	TD25-83		02/98 ▸ 07/02	921103S401	**814304**	698 318	AL

		CC				OE	Valeo	DIM	TECH
OPEL									
ANTARA									
2.0 CDTi 150	D	1991	Z20DMH,Z20DMH/F	R134	10/06 ▸	4806936	•**814359**	636 396	AL
ASTRA G (98>)									
1.2 i 16V	E	1199	X12XE, Z12XE	R134	02/98 ▸ 12/01	1850074	**817505**	548 381	AL
1.2 i 16V	E	1199	X12XE, Z12XE		01/02 ▸	1850073	**818047**	549 375	AL
1.4 i 16V	E	1389	X14XE, Z14XE	R134	02/98 ▸ 12/01	1850074	**817505**	548 381	AL
1.4 i 16V	E	1389	X14XE, Z14XE		01/02 ▸	1850073	**818047**	549 375	AL
1.6 i, 1.6 i 16V	E	1598	X16SZR, X16XEL, Z16SE/E4 Z16XE	R134	02/98 ▸ 12/01	1850074	**817505**	548 381	AL
1.6 i, 1.6 i 16V **1.6 i Twinport 16V**	E	1598	C16SEL, Z16SE/E4, Z16XE Z16XEP(103)		01/02 ▸	1850073	**818047**	549 375	AL
1.6 i GNV	G	1598	Z16YNG		03/03 ▸	1850073	**818047**	549 375	AL
1.8 i 16V	E	1796	X18XE1, Z18XE, Z18XEL	R134	02/98 ▸ 12/01	1850074	**817505**	548 381	AL
1.8 i 16V	E	1796	X18XE1, Z18XE, Z18XEL		01/02 ▸	1850073	**818047**	549 375	AL
2.0 i 16V, 2.0 i Turbo 16V	E	1998	X20XEV, Z20LER-200 Z20LET-190, Z20LET-192	R134	02/98 ▸	1850074	**817505**	548 381	AL
2.2 i 16V	E	2198	Z22SE	R134	10/99 ▸ 12/01	1850074	**817505**	548 381	AL
2.2 i 16V	E	2198	Z22SE		01/02 ▸	1850073	**818047**	549 375	AL
1.7 DTi 16V, 1.7 TD **1.7 TD Ecoturbo** ▸ 22027043	D	1686	X17DTL, Y17DT		02/98 ▸	1850078	**817506**	414 371	AL
2.0 DTi 16V, 2.0 Di 16V ▸ 25012732	D	1995	X20DTL, Y20DTH		02/98 ▸	1850078	**817506**	414 371	AL
2.0 DTi 16V, 2.0 Di 16V	D	1995	X20DTL	R134	02/98 ▸ 12/01	1850074	**817505**	548 381	AL
2.0 Di 16V	D	1995	Y20DTL		01/02 ▸	1850073	**818047**	549 375	AL
2.2 DTI 16V ▸ 28013601	D	2171	Y22DTR		03/01 ▸	1850078	**817506**	414 371	AL
ASTRA H (2004>)									
1.2 i Twinport 16V	E	1229	Z12XEP	R134	03/04 ▸	1850097	**817846**	588 381	AL
1.4 i Twinport 16V	E	1364	Z14XEP	R134	03/04 ▸	1850096	**817839**	548 381	AL
1.6 i Twinport	E	1598	Z16XEP(103)	R134	03/04 ▸	1850096	**817839**	548 381	AL
1.6 i Twinport 16V	E	1598	Z16XEP,Z16XER	R134	03/04 ▸	1850097	**817846**	588 381	AL
1.8 i	E	1796	Z18XE	R134	03/04 ▸	1850096	**817839**	548 381	AL
1.8 i 16V	E	1796	Z18XE,Z18XER	R134	03/04 ▸	1850097	**817846**	588 381	AL
2.0 i Turbo 16V	E	1998	Z20LEL-170, Z20LER-200	R134	03/04 ▸	1850098	**818114**	588 381	AL
2.0 i Turbo 16V OPC	E	1998	Z20LEH	R134	03/05 ▸	1850111	**818168**	520 331	AL
1.3 CDTi 16V	D	1248	Z13DTH	R134	08/05 ▸	1850111	**818168**	520 331	AL
1.7 CDTI	D	1686	Z17DTH, Z17DTL	R134	03/04 ▸	1850099	**817847**	368 381	AL
1.9 CDTI, 1.9 CDTI 16V	D	1910	Z19DTH, Z19DTL	R134	07/04 ▸	1850111	**818168**	520 331	AL
ASTRA J (2009>)									
1.4 i Turbo 16V	E	1364	A14NET		01/10 ▸	1850136	**814201**	568 401	AL
1.4 i Twinport 16V	E	1398	A14XER		09/09 ▸	1850136	**814201**	568 401	AL
1.6 i 115 16V,1.6 i Turbo 16V	E	1598	A16LET,A16XER		09/09 ▸	1850136	**814201**	568 401	AL
1.3 CDTI 16V	D	1248	A13DTE/F		01/10 ▸	1850136	**814201**	568 401	AL
1.7 CDTI 110 16V	D	1686	A17DTJ/F		09/09 ▸	1850136	**814201**	568 401	AL
1.7 CDTI 125 16V	D	1686	A17DTR/F		09/09 ▸	1850135	**814202**	668 401	AL
2.0 CDTI 160 16V	D	1956	A20DTH/F		09/09 ▸	1850135	**814202**	668 401	AL
CORSA B (93>2000)									
1.0 i 12V R4147617 ▸	E	973	X10XE		03/97 ▸ 08/00	1618108	**816902**	600 305	AL
1.2, 1.2 i R4147617 ▸	E	1195	12NZ, C12NZ, X12SZ		03/93 ▸ 08/00	1618108	**816902**	600 305	AL
1.2 i 16V R4147617 ▸	E	1199	X12XE		03/98 ▸ 08/00	1618108	**816902**	600 305	AL
1.4 i, 1.4 i 16V R4147617 ▸	E	1389	C14NZ, C14SE, X14SZ X14XE		03/93 ▸ 08/00	1618108	**816902**	600 305	AL

Valeo recommends replacing the receiver drier with the condenser
Pensez à changer la bouteille déshydratante avec le condenseur
Denken Sie daran, beim Wechsel des Kondensators auch den Trockner zu erneuern
Piense en la sustitución del filtro deshidratante con el condensador
A Valeo recomenda substituir o filtro desidratante com o condensador
Ricordatevi di sostituire il filtro disidratatore insieme al condensatore
Bij de vervanging van de condensor, vervang tevens de filter-droger
Valeo zaleca wymianę filtra osuszacza wraz ze skraplaczem
Рекомендируем замену осушителя вместо с конденсором
Spolu s kondenzátorem je nutné vyměnit také vysoušeč
Nu uitați sa schimbați uscatorul cu condensatorul
Kondenser değişimlerinde nem alıcının da değiştirilmesi gerektiğini dikkate alınız
Πρέπει να αντικαταστήσετε το φίλτρο υγρού μαζί με το συμπυκνωτή

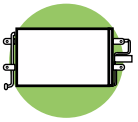

		CC				OE	Valeo	DIM	TECH
OPEL (.../...)									
CORSA B (93>2000) (.../...)									
1.6 i 16V R4147617 ▸	E	1598	C16XE, X16XE		03/93 ▸ 08/00	1618108	**816902**	600 305	AL
1.5 D, 1.5 TD R4147617 ▸	D	1488	15D, 15TD		03/93 ▸ 08/00	1618108	**816902**	600 305	AL
1.7 D	D	1686	X17D		07/95 ▸ 08/00	1618108	**816902**	600 305	AL
1.7 D R4147617 ▸	D	1699	17DA		03/93 ▸ 08/00	1618108	**816902**	600 305	AL
CORSA C (2000>2003)									
1.0 i 12V	E	973	Z10XE	R134	09/00 ▸ 08/03	1850091	**817609**	548 381	AL
1.2 i 16V	E	1199	Z12XE	R134	09/00 ▸ 08/03	1850091	**817609**	548 381	AL
1.4 i 16V	E	1389	Z14XE	R134	09/00 ▸ 08/03	1850091	**817609**	548 381	AL
1.8 i 16V	E	1796	Z18XE	R134	09/00 ▸ 08/03	1850091	**817609**	548 381	AL
1.7 DI 16V, 1.7 DTi 16V	D	1686	Y17DT, Y17DTL	R134	09/00 ▸ 08/03	1850090	**817610**	550 265	AL
1.7 DTi 16V ▸ 34001717	D	1686	Y17DT	R134	09/00 ▸ 08/03	1850089	**818118**	588 381	AL
CORSA C (2003>)									
1.0 i Twinport 12V	E	998	Z10XEP	R134	09/03 ▸ 12/03	1850092	**817843**	548 381	AL
1.0 i Twinport 12V	E	998	Z10XEP	R134	01/04 ▸	1850114	**814066**	545 380	AL
1.2 i 16V	E	1199	Z12XE	R134	09/03 ▸ 12/03	1850091	**817609**	548 381	AL
1.2 i 16V	E	1199	Z12XE	R134	01/04 ▸ 08/04	1850114	**814066**	545 380	AL
1.2 i 16V	E	1199	Z12XE	R134	01/04 ▸ 08/04	1850092	**817843**	548 381	AL
1.2 i Twinport 16V	E	1229	Z12XEP	R134	09/04 ▸	1850114	**814066**	545 380	AL
1.4 i Twinport 16V	E	1364	Z14XEP	R134	09/03 ▸ 12/03	1850092	**817843**	548 381	AL
1.4 i Twinport 16V	E	1364	Z14XEP	R134	01/04 ▸	1850114	**814066**	545 380	AL
1.8 16V	E	1796	Z18XE	R134	09/03 ▸ 12/03	1850091	**817609**	548 381	AL
1.8 16V	E	1796	Z18XE	R134	01/04 ▸	1850092	**817843**	548 381	AL
1.3 CDTI 16V	D	1248	Z13DT	R134	09/03 ▸	1850093	**817844**	548 261	AL
1.7 DTi 16V 34001718 ▸	D	1686	Z17DT	R134	09/03 ▸	1850089	**818118**	588 381	AL
1.7 CDTI	D	1686	Z17DTH	R134	09/03 ▸	1850093	**817844**	548 261	AL
CORSA D (2006>)									
1.0 i Twinport 12V	E	998	Z10XEP	R134	07/06 ▸	1850119	**818193**	552 333	AL
1.2 i Twinport 16V	E	1229	Z12XEP	R134	07/06 ▸	1850119	**818193**	552 333	AL
1.4 i Twinport 16V	E	1364	Z14XEP	R134	07/06 ▸	1850119	**818193**	552 333	AL
1.3 CDTI	D	1248	Z13DTH, Z13DTJ	R134	07/06 ▸	1850168	**818192**	623 302	AL
1.7 CDTI	D	1686	Z17DTR	R134	09/06 ▸	1850168	**818192**	623 302	AL
MERIVA									
1.4 i Twinport 16V	E	1364	Z14XEP	R134	09/04 ▸ 05/10	1850086	**•817798**	538 361	AL
1.6 i Turbo 16V	E	1598	Z16LET		03/06 ▸ 04/09	1850094	**•814014**	538 361	AL
1.6 i,1.6 i 16V	E	1598	Z16SE,Z16XE,Z16XEP	R134	05/03 ▸ 07/10	1850086	**•817798**	538 361	AL
1.8 i 16V	E	1796	Z18XE	R134	05/03 ▸ 04/09	1850086	**•817798**	538 361	AL
1.3 CDTi,1.3 CDTi 16V	D	1248	Y13DT,Z13DT,Z13DTJ		08/03 ▸ 07/10	1850094	**•814014**	538 361	AL
1.7 DTi 16V	D	1686	Y17DT	R134	05/03 ▸ 04/05	1850086	**•817798**	538 361	AL
1.7 CDTi 16V	D	1686	Z17DTH		08/03 ▸ 10/09	1850094	**•814014**	538 361	AL
SIGNUM									
1.8 i 16V	E	1796	Z18XE	R134	06/03 ▸	1850076	**817647**	658 411	AL
2.0 i Turbo 16V	E	1998	Z20NET	R134	06/03 ▸	1850083	**817852**	610 410	AL
2.2 DIG 16V	E	2198	Z22YH	R134	06/03 ▸	1850076	**817647**	658 411	AL
3.2 i V6 24V	E	3175	Z32SE	R134	06/03 ▸	1850076	**817647**	658 411	AL
1.9 CDTI, 1.9 CDTI 16V	D	1910	Z19DTH, Z19DTJ	R134	04/04 ▸	1850095	**817809**	619 417	AL
2.0 DTi 16V	D	1995	Y20DTH	R134	06/03 ▸	1850077	**817648**	658 411	AL
2.2 DTI 16V	D	2171	Y22DTR	R134	06/03 ▸	1850077	**817648**	658 411	AL
3.0 CDTi V6 24V	D	2958	Y30DT	R134	06/03 ▸	1850084	**817853**	478 401	AL
SIGNUM B (2005>)									
1.8 i 16V	E	1796	Z18XE	R134	10/05 ▸	1850076	**817647**	658 411	AL

• **New** Nouveau **Neu** Nuevo **Novo** Nuovo **Nieuw** Nowi **Новый** Novy **Nou** Yeni **Νέους**

⏭ **Multi-product Crosslist on section 1** Cross List Multi-produits, Section 1
Crossliste siehe Kapitel 1 Crosslist Multiproducto en la sección 1
Lista Multi-produto na secção 1 Cross-list Multi prodotto nella sezione 1
Rubriek 1 : Cross list "alle produkten" Kombinovaný převodník v sekci 1
Crosslist multi-produse, secţie 1 **Çoklu ürün çapraz listesi bölüm 1 tedir**
Αντιστοιχίες προϊόντων στο κεφάλαιο 1

		CC				OE	Valeo	DIM	TECH
OPEL (.../...)									
SIGNUM B (2005>) (.../...)									
2.0 i Turbo 16V	E	1998	Z20NET	R134	10/05 ▸	1850083	**817852**	610 410	AL
2.2 DIG 16V	E	2198	Z22YH	R134	10/05 ▸	1850076	**817647**	658 411	AL
1.9 CDTI	D	1910	Z19DTL,Z19DT	R134	10/05 ▸	1850095	**817809**	619 417	AL
1.9 CDTI 16V	D	1910	Z19DTH	R134	10/05 ▸	1850095	**817809**	619 417	AL
3.0 CDTi V6 24V	D	2958	Y30DT	R134	10/05 ▸	1850084	**817853**	478 401	AL
TIGRA (94>2003)									
1.4 i 16V	E	1389	X14XE		10/94 ▸ 01/01	1618109	**816924**	600 274	AL
1.6 i 16V	E	1598	X16XE		10/94 ▸ 01/01	1618109	**816924**	600 274	AL
TIGRA TWINTOP (2004>)									
1.4 i Twinport 16V	E	1364	Z14XEP	R134	07/04 ▸ 12/04	1850092	**817843**	548 381	AL
1.4 i Twinport 16V	E	1364	Z14XEP	R134	01/05 ▸	1850114	**814066**	545 380	AL
1.8 i 16V	E	1796	Z18XE	R134	07/04 ▸ 12/04	1850092	**817843**	548 381	AL
1.8 i 16V	E	1796	Z18XE	R134	01/05 ▸	1850114	**814066**	545 380	AL
1.3 CDTi 16V	D	1248	Z13DT	R134	07/04 ▸	1850093	**817844**	548 261	AL
VECTRA B (95>99)									
2.0 TDi 16V	D	1995	X20DTH	R134	09/97 ▸ 01/99	1850051	**817670**	510 370	AL
VECTRA B (99>2002)									
2.0 DTi 16V	D	1995	Y20DTH	R134	02/99 ▸ 04/02	1850061	**817670**	510 370	AL
2.2 DTI 16V	D	2171	Y22DTR	R134	09/00 ▸ 04/02	1850061	**817670**	510 370	AL
VECTRA C (2002>2005)									
1.6 i 16V	E	1598	Z16XE	R134	04/02 ▸	1850076	**817647**	658 411	AL
1.8 i 16V	E	1796	Z18XE, Z18XEL-110	R134	04/02 ▸	1850076	**817647**	658 411	AL
2.0 i Turbo 16V	E	1998	Z20NET	R134	03/03 ▸	1850083	**817852**	610 410	AL
2.2 DIG 16V, 2.2 i 16V	E	2198	Z22SE, Z22YH	R134	04/02 ▸	1850076	**817647**	658 411	AL
3.2 i V6 24V	E	3175	Z32SE	R134	06/02 ▸	1850076	**817647**	658 411	AL
1.9 CDTI, 1.9 CDTI 16V	D	1910	Z19DTH, Z19DTJ	R134	04/04 ▸	1850095	**817809**	619 417	AL
2.0 DTi 16V	D	1995	Y20DTH	R134	04/02 ▸	1850077	**817648**	658 411	AL
2.2 DTI 16V	D	2171	Y22DTR	R134	04/02 ▸	1850077	**817648**	658 411	AL
3.0 CDTI V6 24V	D	2958	Y30DT	R134	06/03 ▸	1850084	**817853**	478 401	AL
VECTRA C (2005>)									
1.6 i 16V	E	1598	Z16XE	R134	10/05 ▸	1850076	**817647**	658 411	AL
1.8 i 16V	E	1796	Z18XER	R134	10/05 ▸	1850076	**817647**	658 411	AL
2.0 i Turbo 16V	E	1998	Z20NET	R134	10/05 ▸	1850083	**817852**	610 410	AL
2.2 DIG 16V	E	2198	Z22YH	R134	10/05 ▸	1850076	**817647**	658 411	AL
1.9 CDTI	D	1910	Z19DTL	R134	10/05 ▸	1850095	**817809**	619 417	AL
1.9 CDTI, 1.9 CDTI 16V	D	1910	Z19DT, Z19DTH	R134	10/05 ▸	1850095	**817809**	619 417	AL
3.0 CDTI V6 24V	D	2958	Y30DT	R134	10/05 ▸	1850084	**817853**	478 401	AL
ZAFIRA (98>2003)									
1.6 i 16V	E	1598	X16XEL, Z16XE, Z16XE/D3	R134	01/99 ▸ 12/01	1850074	**817505**	548 381	AL
1.6 i 16V	E	1598	Z16XE, Z16XE/D3		01/02 ▸ 06/03	1850073	**818047**	549 375	AL
1.8 i 16V	E	1796	X18XE1, Z18XE	R134	01/99 ▸ 12/01	1850074	**817505**	548 381	AL
1.8 i 16V	E	1796	Z18XE		01/02 ▸ 06/03	1850073	**818047**	549 375	AL
2.0 i Turbo 16V	E	1998	Z20LET	R134	09/01 ▸ 06/03	1850074	**817505**	548 381	AL
2.2 i 16V	E	2198	Z22SE	R134	01/99 ▸ 12/01	1850074	**817505**	548 381	AL
2.2 i 16V	E	2198	Z22SE		01/02 ▸ 06/03	1850073	**818047**	549 375	AL
2.0 DT 16V, 2.0 DTI 16V	D	1995	X20DTL, Y20DTL	R134	01/99 ▸ 12/01	1850074	**817505**	548 381	AL
2.0 DT 16V, 2.0 DTI 16V	D	1995	X20DTL, Y20DTL		01/02 ▸ 06/03	1850073	**818047**	549 375	AL
2.0 DTi 16V ▸2H009141	D	1995	Y20DTH		01/99 ▸ 06/03	1850078	**817506**	414 371	AL
ZAFIRA (2003>2005)									
1.6 i GNV	G	1598	Z16YNG		07/03 ▸ 06/05	1850073	**818047**	549 375	AL

Valeo recommends replacing the receiver drier with the condenser
Pensez à changer la bouteille déshydratante avec le condenseur
Denken Sie daran, beim Wechsel des Kondensators auch den Trockner zu erneuern
Piense en la sustitución del filtro deshidratante con el condensador
A Valeo recomenda substituir o filtro desidratante com o condensador
Ricordatevi di sostituire il filtro disidratatore insieme al condensatore
Bij de vervanging van de condensor, vervang tevens de filter-droger

Valeo zaleca wymianę filtra osuszacza wraz ze skraplaczem
Рекомендируем замену осушителя вместо с конденсором
Spolu s kondenzátorem je nutné vyměnit také vysoušeč
Nu uitați sa schimbați uscatorul cu condensatorul
Kondenser değişimlerinde nem alıcının da değiştirilmesi gerektiğini dikkate alınız
Πρέπει να αντικαταστήσετε το φίλτρο υγρού μαζί με το συμπυκνωτή

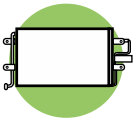

		CC				OE	Valeo	DIM	TECH
OPEL (.../...)									
ZAFIRA (2003>2005) (.../...)									
1.6 i 16V	E	1598	Z16XE, Z16XE/D4		07/03 ▸ 06/05	1850073	**818047**	549 375	AL
1.8 i 16V	E	1796	Z18XE		07/03 ▸ 06/05	1850073	**818047**	549 375	AL
2.0 i Turbo 16V	E	1998	Z20LET-192	+/ R134	07/03 ▸ 06/05	1850074	**817505**	548 381	AL
2.2 i 16V	E	2198	Z22SE		07/03 ▸ 06/05	1850073	**818047**	549 375	AL
2.0 DTI 16V	D	1995	Y20DTL		07/03 ▸ 06/05	1850073	**818047**	549 375	AL
2.2 DTI 16V	D	2171	Y22DTR		07/03 ▸ 06/05	1850078	**817506**	414 371	AL
ZAFIRA II (2005>)									
1.8 i 16V	E	1796	Z18XER	+/ R134	09/05 ▸	1850096	**817839**	548 381	AL
2.0 i Turbo 16V	E	1998	Z20LER	+/ R134	07/05 ▸	1850098	**818114**	588 381	AL
2.0 i Turbo 16V OPC	E	1998	Z20LEH	+/ R134	07/05 ▸	1850111	**818168**	520 331	AL
2.2 i 16V	E	2198	Z22YH	+/ R134	07/05 ▸	1850097	**817846**	588 381	AL
1.9 CDTI, 1.9 CDTI 16V	D	1910	Z19DT, Z19DTH, Z19DTL	+/ R134	07/05 ▸	1850111	**818168**	520 331	AL
OPEL									
COMBO (93>2001)									
1.2, 1.2 i R4147617 ▸	E	1195	12NZ, C12NZ, X12SZ		01/94 ▸ 09/01	1618108	**816902**	600 305	AL
1.4 i S4000001 ▸	E	1389	C14NZ, C14SE, X14SZ		03/93 ▸ 09/01	1618081	**816902**	600 305	AL
1.7 D	D	1686	X17D		07/95 ▸ 09/01	1618108	**816902**	600 305	AL
1.7 D R4147617 ▸	D	1699	17DA		01/94 ▸ 09/01	1618108	**816902**	600 305	AL
COMBO (2001>)									
1.4 i Twinport 16V ▸ 54010987	E	1364	Z14XEP	+/ R134	07/04 ▸ 01/05	1850092	**817843**	548 381	AL
1.4 i Twinport 16V 54010988 ▸	E	1364	Z14XEP	+/ R134	02/05 ▸	1850114	**814066**	545 380	AL
1.6 i	E	1598	Z16SE/E4	+/ R134	10/01 ▸ 06/04	1850091	**817609**	548 381	AL
1.3 CDTI 16V	D	1248	Z13DT	+/ R134	07/04 ▸	1850093	**817844**	548 261	AL
1.7 DI 16V, 1.7 DTI 16V 23042391 ▸	D	1686	Y17DTL, Y17DT	+/ R134	10/01 ▸ 06/04	1850089	**818118**	588 381	AL
1.7 CDTI 16V	D	1686	Z17DTH	+/ R134	07/04 ▸	1850093	**817844**	548 261	AL
1.7 DI 16V ▸ 34400468	D	1686	Y17DTL	+/ R134	10/01 ▸ 01/03	1850090	**817610**	550 265	AL
COMBO TOUR (2002>)									
1.4 i Twinport 16V	E	1364	Z14XEP	+/ R134	07/04 ▸	1850092	**817843**	548 381	AL
1.6 i	E	1598	Z16SE/E4	+/ R134	04/02 ▸ 06/04	1850091	**817609**	548 381	AL
1.3 CDTI 16V	D	1248	Z13DT,Z13DT-FAP	+/ R134	07/04 ▸	1850093	**817844**	548 261	AL
1.7 DTi 16V, 1.7 CDTI 16V	D	1686	Y17DTL	+/ R134	04/02 ▸	1850090	**817610**	550 265	AL
1.7 CDTI 16V	D	1686	Z17DTH	+/ R134	07/04 ▸	1850093	**817844**	548 261	AL
MOVANO									
1.9 DTI	D	1870	F9Q.7.70, F9Q.7.72		08/00 ▸ 07/02	4401424	**817689**	694 381	AL
1.9 DTi	D	1870	F9Q.7.72	N/ R134	2004 ▸ 10/06	4403238	**817601**	690 376	AL
2.2 Dti 16V	D	2188	G9T.7.20,G9T.7.22	N/ R134	09/00 ▸ 10/06	4403238	**817601**	690 376	AL
2.5 D	D	2445	S8U.7.72		10/98 ▸ 10/01	4500908	**817065**	690 376	AL
2.2 DTI 16V, 2.5 DTI 16V ▸ B424976	D	2464	G9U.7.20, G9U.7.24		10/01 ▸	4401424	**817689**	694 381	AL
2.5 CDTi 16V,2.5 DTi 16V B24977 ▸	D	2464	G9U.7.20,G9U.7.24	N/ R134	10/01 ▸ 10/06	4403238	**817601**	690 376	AL
VIVARO									
2.0 i 16V	E	1998	F4R.7.20		05/01 ▸	4408646	**817577**	574 437	AL
2.0 i 16V	E	1998	F4R.7.20		05/01 ▸	4414387	**817644**	573 442	AL
1.9 DTI	D	1870	F9Q.7.60		05/01 ▸	4408646	**817577**	574 437	AL

• **New** Nouveau **Neu** Nuevo **Novo** Nuovo **Nieuw** Nowi **Новый** Novy **Nou** Yeni **Νέους**

⏭ **Multi-product Crosslist on section 1** Cross List Multi-produits, Section 1
Crossliste siehe Kapitel 1 Crosslist Multiproducto en la sección 1
Lista Multi-produto na secção 1 Cross-list Multi prodotto nella sezione 1
Rubriek 1 : Cross list "alle produkten" Kombinovaný převodník v sekci 1
Crosslist multi-produse, secţie 1 **Çoklu ürün çapraz listesi bölüm 1 tedir**
Αντιστοιχίες προϊόντων στο κεφάλαιο 1

		CC				OE	Valeo	DIM	TECH
OPEL (.../...)									
VIVARO (.../...)									
1.9 DTI	D	1870	F9Q.7.60		05/01 ▸	4414387	**817644**	573 442	AL
1.9 DI	D	1896	F9Q.7.62		05/01 ▸	4408646	**817577**	574 437	AL
1.9 DI	D	1896	F9Q.7.62		05/01 ▸	4414387	**817644**	573 442	AL
2.5 DTI	D	2463	G9U.7.30		05/03 ▸	4414580	**817645**	658 405	AL
PEUGEOT									
106 (96>2003)									
1.0 i ▸8330	E	954	TU9M		03/96 ▸ 08/99	6455V5	**816977**	540 312	AL
1.0 i 8576 ▸	E	954	TU9M		05/00 ▸ 07/03	6455Z7	**817655**	588 321	AL
1.1, 1.1 i, 1.1 i GPL ▸8330	E	1124	TU1M+, TU1TR		03/96 ▸ 08/99	6455V5	**816977**	540 312	AL
1.1, 1.1 i, 1.1 i GPL 8576 ▸	E	1124	TU1M+,TU1JP,TU1TR		05/00 ▸ 07/03	6455Z7	**817655**	588 321	AL
1.4, 1.4 i ▸8330	E	1360	TU3.2, TU3JP		03/96 ▸ 08/99	6455V5	**816977**	540 312	AL
1.4, 1.4 i 8576 ▸	E	1360	TU3.2,TU3JP		05/00 ▸ 07/03	6455Z7	**817655**	588 321	AL
1.6 i, 1.6 i 16V ▸8330	E	1587	TU5J2, TU5J4, TU5JP		03/96 ▸ 08/99	6455V5	**816977**	540 312	AL
1.6 i, 1.6 i 16V 8576 ▸	E	1587	TU5JP,TU5J2,TU5J4		05/00 ▸ 07/03	6455Z7	**817655**	588 321	AL
1.5 D 8576 ▸	D	1527	TUD5,TUD5B		01/99 ▸ 07/03	6455Z7	**817655**	588 321	AL
1.5 D ▸8330	D	1527	TUD5, TUD5B		03/96 ▸ 08/99	6455V5	**816977**	540 312	AL
107									
1.0 i 12V	E	998	384F(CFA)	+/ R134	06/05 ▸	6455EF	**818013**	359 351	AL
1.4 HDi	D	1398	DV4TD	+/ R134	06/05 ▸	6455EE	**818014**	359 351	AL
1007									
1.4 i	E	1360	TU3JP	+/ R134	04/05 ▸	6455ET	**814095**	464 371	AL
1.6 i 16V	E	1598	TU5JP	+/ R134	04/05 ▸	6455ET	**814095**	464 371	AL
1.4 HDi	D	1398	DV4TD	+/ R134	04/05 ▸	6455ET	**814095**	464 371	AL
1.6 HDi 16V	D	1560	DV6TED4	+/ R134	02/07 ▸	6455EK	**818015**	524 368	AL
206									
1.1 i ▸9792	E	1124	TU1JP		09/98 ▸ 08/03	6455X9	**817283**	556 364	AL
1.1 i 9793 ▸	E	1124	TU1JP	29 Tubes	09/03 ▸	6455CH	**818000**	556 364	AL
1.4 i ▸9792	E	1360	TU3JP		09/98 ▸ 08/03	6455X9	**817283**	556 364	AL
1.4 i 9793 ▸	E	1360	TU3JP	29 Tubes	09/03 ▸	6455CH	**818000**	556 364	AL
1.4 i, 1.4 i 16V	E	1360	ET3J4, TU3JP	30 Tubes	09/03 ▸	6455CJ	**818001**	556 364	AL
1.6 i, 1.6 i 16V ▸9792	E	1587	TU5JP, TU5JP4		09/98 ▸ 12/03	6455X9	**817283**	556 364	AL
1.6 i 16V	E	1587	TU5JP4	30 Tubes	09/03 ▸	6455CJ	**818001**	556 364	AL
1.6 i, 1.6 i 16V 9793 ▸	E	1587	TU5JP, TU5JP4	29 Tubes	09/03 ▸	6455CH	**818000**	556 364	AL
2.0 i 16V ▸9792	E	1997	EW10J4		04/99 ▸ 08/03	6455X9	**817283**	556 364	AL
2.0 i 16V 9793 ▸	E	1997	EW10J4, EW10J4S	29 Tubes	09/03 ▸	6455CH	**818000**	556 364	AL
1.4 HDi	D	1398	DV4TD		03/02 ▸ 08/03	6455Y0	**817283**	556 364	AL

Valeo recommends replacing the receiver drier with the condenser
Pensez à changer la bouteille déshydratante avec le condenseur
Denken Sie daran, beim Wechsel des Kondensators auch den Trockner zu erneuern
Piense en la sustitución del filtro deshidratante con el condensador
A Valeo recomenda substituir o filtro desidratante com o condensador
Ricordatevi di sostituire il filtro disidratatore insieme al condensatore
Bij de vervanging van de condensor, vervang tevens de filter-droger

Valeo zaleca wymianę filtra osuszacza wraz ze skraplaczem
Рекомендируем замену осушителя вместо с конденсором
Spolu s kondenzátorem je nutné vyměnit také vysoušeč
Nu uitați sa schimbați uscatorul cu condensatorul
Kondenser değişimlerinde nem alıcının da değiştirilmesi gerektiğini dikkate alınız
Πρέπει να αντικαταστήσετε το φίλτρο υγρού μαζί με το συμπυκνωτή

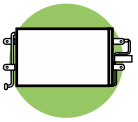

		CC				OE	Valeo	DIM	TECH

PEUGEOT (.../...)

206 (.../...)

1.4 HDi	D	1398	DV4TD	30 Tubes	09/03 ▸	6455CJ	**818001**	556 364	AL
1.4 HDi ▸ 9793 ▸	D	1398	DV4TD	29 Tubes	09/03 ▸	6455CH	**818000**	556 364	AL
1.9 D	D	1868	DW8, DW8B		09/98 ▸	6455X9	**817283**	556 364	AL
1.9 D	D	1868	DW8B	30 Tubes	09/03 ▸	6455CJ	**818001**	556 364	AL
2.0 HDi	D	1997	DW10TD		09/99 ▸ 08/03	6455Y0	**817283**	556 364	AL
2.0 HDi	D	1997	DW10TD	30 Tubes	09/03 ▸	6455CJ	**818001**	556 364	AL

206 CC

1.6 i 16V ▸ 9792	E	1587	TU5JP4		02/01 ▸ 08/03	6455Y0	**817283**	556 364	AL
1.6 i 16V ▸ 9793 ▸	E	1587	TU5JP4	30 Tubes	09/03 ▸	6455CJ	**818001**	556 364	AL
2.0 i 16V ▸ 9792	E	1997	EW10J4		10/00 ▸ 08/03	6455X9	**817283**	556 364	AL
2.0 i 16V ▸ 9793 ▸	E	1997	EW10J4	29 Tubes	09/03 ▸	6455CH	**818000**	556 364	AL

206 SW

1.1 i ▸ 9792	E	1124	TU1JP		05/02 ▸ 08/03	6455Y0	**817283**	556 364	AL
1.1 i ▸ 9793 ▸	E	1124	TU1JP	29 Tubes	09/03 ▸	6455CH	**818000**	556 364	AL
1.4 i ▸ 9792	E	1360	TU3JP		05/02 ▸ 08/03	6455Y0	**817283**	556 364	AL
1.4 i ▸ 9793 ▸	E	1360	TU3JP	29 Tubes	09/03 ▸	6455CH	**818000**	556 364	AL
1.4 i, 1.4 i 16V	E	1360	ET3J4, TU3JP	30 Tubes	09/03 ▸	6455CJ	**818001**	556 364	AL
1.6 i 16V ▸ 9792	E	1587	TU5JP4		05/02 ▸ 08/03	6455X9	**817283**	556 364	AL
1.6 i 16V ▸ 9793 ▸	E	1587	TU5JP4	29 Tubes	09/03 ▸	6455CH	**818000**	556 364	AL
1.6 i 16V	E	1587	TU5JP4	30 Tubes	09/03 ▸	6455CJ	**818001**	556 364	AL
2.0 i 16V ▸ 9792	E	1997	EW10J4		05/02 ▸ 08/03	6455X9	**817283**	556 364	AL
2.0 i 16V ▸ 9793 ▸	E	1997	EW10J4	29 Tubes	09/03 ▸	6455CH	**818000**	556 364	AL
1.4 HDi ▸ 9792	D	1398	DV4TD		05/02 ▸ 08/03	6455Y0	**817283**	556 364	AL
1.4 HDi ▸ 9793 ▸	D	1398	DV4TD	29 Tubes	09/03 ▸	6455CH	**818000**	556 364	AL
1.4 HDi	D	1398	DV4TD	30 Tubes	09/03 ▸	6455CJ	**818001**	556 364	AL
2.0 HDi ▸ 9792	D	1997	DW10TD		05/02 ▸ 08/03	6455X9	**817283**	556 364	AL
2.0 HDi ▸ 9793 ▸	D	1997	DW10TD	29 Tubes	09/03 ▸	6455CH	**818000**	556 364	AL
2.0 HDi	D	1997	DW10TD	30 Tubes	09/03 ▸	6455CJ	**818001**	556 364	AL

206+ (2009>)

1.1 i ▸ 03/09	E	1124	TU1A		▸	6455CH	**818000**	556 364	AL
1.1 i ▸ 10/10	E	1124	TU1AE5		▸	6455CJ	**818001**	556 364	AL
1.4 i ▸ 03/09	E	1360	TU3A,TU3AE5		▸	6455CJ	**818001**	556 364	AL
1.4 HDi ▸ 03/09	D	1398	DV4C,DV4TD		▸	6455CJ	**818001**	556 364	AL

207

1.4 e, 1.4 e 16V ▸ 11556	E	1360	ET3J4, TU3A	R134	03/06 ▸	6455EL	**814095**	464 371	AL

• **New** Nouveau **Neu** Nuevo **Novo** Nuovo **Nieuw** Nowi **Новый** Novy **Nou** Yeni **Νέους**

⏭ **Multi-product Crosslist on section 1** Cross List Multi-produits, Section 1
Crossliste siehe Kapitel 1 Crosslist Multiproducto en la sección 1
Lista Multi-produto na secção 1 Cross-list Multi prodotto nella sezione 1
Rubriek 1 : Cross list "alle produkten" Kombinovaný převodník v sekci 1
Crosslist multi-produse, secţie 1 **Çoklu ürün çapraz listesi bölüm 1 tedir**
Αντιστοιχίες προϊόντων στο κεφάλαιο 1

		cc				OE	Valeo	DIM	TECH
PEUGEOT (.../...)									
207 (.../...)									
1.4 VTi, 1.4 VTi 16V ▸11556	E	1397	EP3	R134	07/07 ▸ 06/08	6455EL	**814095**	464 371	AL
1.6 e 16V	E	1587	TU5JP4	R134	03/06 ▸	6455ET	**814095**	464 371	AL
1.6 e 16V ▸11557	E	1587	TU5JP4	R134	07/08 ▸	6455HG	**818015**	524 368	AL
1.6 THP	E	1598	EP6DT	R134	09/06 ▸	6455EK	**818015**	524 368	AL
1.6 VTi, 1.6 e 16V ▸11556	E	1598	EP6	R134	01/07 ▸	6455EL	**814095**	464 371	AL
1.6e 16V	E	1598	TU5JP4AL4	R134	03/07 ▸	6455EK	**818015**	524 368	AL
1.4 HDi	D	1398	DV4TD	R134	03/06 ▸	6455EL	**814095**	464 371	AL
1.6 HDi 16V (90)	D	1560	DV6TED4	R134	03/06 ▸	6455EK	**818015**	524 368	AL
1.6 HDi, 1.6 HDi 16V ▸11557	D	1560	DV6ATED4, DV6TED4	R134	06/08 ▸	6455HG	**818015**	524 368	AL
208									
1.0 VTi 68 12V	E	999	EB0		03/12 ▸	6455JF	**814095**	464 371	AL
1.2 VTi 82 12V	E	1199	EB2		03/12 ▸	6455JF	**814095**	464 371	AL
1.6 VTi 120,1.6 VTi 120 16V	E	1598	EP6C		03/12 ▸	6455JF	**814095**	464 371	AL
1.4 HDi 68,1.4 e-HDi 68	D	1398	DV4C		03/12 ▸	6455JF	**814095**	464 371	AL
1.6 e-HDi 115,1.6 e-HDi 92	D	1560	DV6C,DV6DTED		03/12 ▸	6455HF	**818015**	524 368	AL
306 (93>97)									
1.1 i	E	1124	TU1M, TU1M+		02/93 ▸ 02/97	6455AV	**817230**	568 341	AL
1.4, 1.4 i	E	1360	TU3, TU3.2, TU3JP, TU3MC		02/93 ▸ 02/97	6455Q9	**817230**	568 341	AL
1.6 i	E	1587	TU5JP		02/93 ▸ 02/97	6455AV	**817230**	568 341	AL
1.8 i	E	1761	XU7JP		02/93 ▸ 02/97	6455Q9	**817230**	568 341	AL
2.0 i, 2.0 i 16V	E	1998	XU10J2, XU10J2C, XU10J4 XU10J4R, XU10J4RS		06/93 ▸ 02/97	6455AV	**817230**	568 341	AL
1.8 D	D	1769	XUD7		06/93 ▸ 02/97	6455Q9	**817230**	568 341	AL
1.9 D, 1.9 TD	D	1905	XUD9, XUD9A, XUD9TE		06/93 ▸ 02/97	6455R0	**817230**	568 341	AL
306 (97>)									
1.4, 1.4 i, 1.4 i GPL	E	1360	TU3.2, TU3JP		03/97 ▸ 03/02	6455AV	**817230**	568 341	AL
1.6 i	E	1587	TU5JP, TU5JP+		03/97 ▸ 09/02	6455AV	**817230**	568 341	AL
1.8 i 16V	E	1761	XU7JP4		03/97 ▸ 02/02	6455AW	**817229**	628 341	AL
1.8 i, 1.8 i 16V, 1.8 i GPL 16V	E	1761	XU7JP, XU7JP4		03/97 ▸ 09/02	6455AV	**817230**	568 341	AL
2.0 i 16V	E	1998	XU10J4R, XU10J4RS		03/97 ▸ 09/02	6455AV	**817230**	568 341	AL
1.8 D	D	1769	XUD7		03/97 ▸ 02/02	6455AW	**817229**	628 341	AL
1.9 D	D	1868	DW8, DW8B		11/98 ▸ 03/02	6455AW	**817229**	628 341	AL
1.9 D, 1.9 SD, 1.9 TD	D	1905	XUD9A, XUD9BSD, XUD9TE		03/97 ▸ 03/02	6455AW	**817229**	628 341	AL
2.0 HDi	D	1997	DW10TD		03/99 ▸ 03/02	6455AW	**817229**	628 341	AL
307 (2001>2005)									
1.4 i, 1.4 i 16V ▸10158	E	1360	ET3J4, TU3JP	R134	09/01 ▸ 08/04	6455AA	**817524**	518 367	AL
1.4 i, 1.4 i 16V ▸10159	E	1360	ET3J4, TU3JP	R134	08/04 ▸ 06/05	6455GK	**818170**	568 361	AL
1.6 i, 1.6 i 16V ▸10158	E	1587	TU5JP4	R134	03/01 ▸ 08/04	6455AA	**817524**	518 367	AL
1.6 i, 1.6 i 16V ▸10159	E	1587	TU5JP4	R134	08/04 ▸ 06/05	6455GK	**818170**	568 361	AL
2.0 i 16V ▸10158	E	1997	EW10J4	R134	03/01 ▸ 08/04	6455AA	**817524**	518 367	AL
2.0 i 16V ▸10159	E	1997	EW10A, EW10J4	R134	08/04 ▸ 06/05	6455GK	**818170**	568 361	AL
2.0 i 16V ▸10163	E	1997	EW10J4S	R134	09/03 ▸ 09/04	6455AC	**817526**	518 368	AL
1.4 HDi ▸10158	D	1399	DV4TD	R134	02/02 ▸ 08/04	6455AA	**817524**	518 367	AL

Valeo recommends replacing the receiver drier with the condenser
Pensez à changer la bouteille déshydratante avec le condenseur
Denken Sie daran, beim Wechsel des Kondensators auch den Trockner zu erneuern
Piense en la sustitución del filtro deshidratante con el condensador
A Valeo recomenda substituir o filtro desidratante com o condensador
Ricordatevi di sostituire il filtro disidratatore insieme al condensatore
Bij de vervanging van de condensor, vervang tevens de filter-droger

Valeo zaleca wymianę filtra osuszacza wraz ze skraplaczem
Рекомендируем замену осушителя вместо с конденсором
Spolu s kondenzátorem je nutné vyměnit také vysoušeč
Nu uitați sa schimbați uscatorul cu condensatorul
Kondenser değişimlerinde nem alıcının da değiştirilmesi gerektiğini dikkate alınız
Πρέπει να αντικαταστήσετε το φίλτρο υγρού μαζί με το συμπυκνωτή

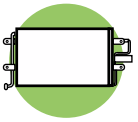

	CC				OE	Valeo	DIM	TECH
PEUGEOT (.../...)								
307 (2001>2005) (.../...)								
1.4 HDi ▸10159	D	1399	DV4TD	R134	08/04 ▸ 06/05	6455GK	**818170**	568 361	AL
1.6 HDi, 1.6 HDi 16V ▸10164	D	1560	DV6ATED4, DV6TED4	R134	09/04 ▸ 03/05	6455GH	**818171**	568 361	AL
2.0 HDi	D	1997	DW10TD	R134	03/01 ▸ 03/05	6455AA	**817524**	518 367	AL
2.0 HDi ▸10158	D	1997	DW10TD	R134	08/04 ▸ 03/05	6455GK	**818170**	568 361	AL
2.0 HDi ▸10163	D	1997	DW10ATED, DW10TD	R134	03/01 ▸ 09/04	6455AC	**817526**	518 368	AL
2.0 HDi ▸10164	D	1997	DW10ATED, DW10TD	R134	09/04 ▸ 03/05	6455GH	**818171**	568 361	AL
307 (2005>)								
1.4 i 16V	E	1360	ET3J4	R134	06/05 ▸	6455GK	**818170**	568 361	AL
1.4 i 16V ▸11376	E	1360	ET3J4	R134	01/08 ▸	6455GH	**818171**	568 361	AL
1.6 i 16V	E	1587	TU5JP4	R134	06/05 ▸	6455GK	**818170**	568 361	AL
2.0 i 16V	E	1997	EW10A, EW10J4, EW10J4S	R134	06/05 ▸	6455GH	**818171**	568 361	AL
1.6 HDi 16V	D	1560	DV6ATED4, DV6TED4	R134	06/05 ▸	6455GH	**818171**	568 361	AL
2.0 HDi 16V	D	1997	DW10BTED4	R134	06/05 ▸	6455GH	**818171**	568 361	AL
308								
1.4 VTi 16V ▸11375	E	1397	EP3	R134	09/07 ▸	6455CX	**818171**	568 361	AL
1.6 THP 16V, 1.6 VTi 16V ▸11376	E	1598	EP6, EP6DT, EP6DTS	R134	09/07 ▸	6455GH	**818171**	568 361	AL
1.6 HDi 16V ▸11375	D	1560	DV6ATED4, DV6TED4 DV6TED4B	R134	09/07 ▸	6455CX	**818171**	568 361	AL
2.0 HDi 16V	D	1997	DW10BTED4	R134	09/07 ▸	6455GH	**818171**	568 361	AL
3008								
1.6 HDi 16V	D	1560	DV6TED4	R134	09/09 ▸	6455GH	**818171**	568 361	AL
406 (95>)								
1.6 i	E	1580	XU5JP		10/95 ▸ 03/04	6453JA	**817375**	650 376	AL
1.8 i, 1.8 i 16V, 1.8 i GPL 16V	E	1761	XU7JB, XU7JP, XU7JP4		10/95 ▸ 04/04	6453JA	**817375**	650 376	AL
2.0 i 16V, 2.0 i Turbo	E	1998	XU10J2TE, XU10J4R		10/95 ▸ 04/04	6453JA	**817375**	650 376	AL
3.0 i V6 24V	E	2946	ES9J4, ES9J4S		10/96 ▸ 04/04	6453JA	**817375**	650 376	AL
406 (95>99)								
1.9 TD	D	1905	XUD9BSD, XUD9BTF, XUD9SD XUD9TE		11/95 ▸ 03/99	6453JA	**817375**	650 376	AL
2.0 HDi	D	1997	DW10ATED		10/98 ▸ 03/99	6453JA	**817375**	650 376	AL
2.1 TD	D	2088	XUD11BTE		11/95 ▸ 03/99	6453JA	**817375**	650 376	AL
406 (99>)								
1.8 i 16V, 1.8 i GPL 16V	E	1749	EW7J4	R134	10/00 ▸ 04/04	6455CQ	**817667**	518 361	AL
2.0 HPi 16V, 2.0 i 16V	E	1997	EW10D, EW10J4	R134	04/99 ▸ 04/04	6455CQ	**817667**	518 361	AL
2.2 i 16V	E	2230	EW12J4	R134	05/00 ▸ 04/04	6455CQ	**817667**	518 361	AL
3.0 i V6 24V	E	2946	ES9J4S	R134	09/00 ▸ 04/04	6455CQ	**817667**	518 361	AL
2.0 HDi	D	1997	DW10ATED, DW10TD	R134	04/99 ▸ 04/04	6455CQ	**817667**	518 361	AL
2.2 HDi 16V	D	2179	DW12TED4	R134	10/00 ▸ 04/04	6455CQ	**817667**	518 361	AL
407								
1.8 i 16V	E	1749	EW7J4	R134	04/04 ▸	6455FX	**817824**	560 361	AL
1.8 i 16V ▸11438	E	1749	EW7A		03/08 ▸ 12/09	6455GY	**814090**	539 361	AL
2.0 i 16V	E	1997	EW10J4	R134	04/04 ▸	6455FX	**817824**	560 361	AL

• **New** Nouveau **Neu** Nuevo **Novo** Nuovo **Nieuw** Nowi **Новый** Novy **Nou** Yeni **Νέους**

Multi-product Crosslist on section 1 Cross List Multi-produits, Section 1
Crossliste siehe Kapitel 1 Crosslist Multiproducto en la sección 1
Lista Multi-produto na secção 1 Cross-list Multi prodotto nella sezione 1
Rubriek 1 : Cross list "alle produkten" Kombinovaný převodník v sekci 1
Crosslist multi-produse, secţie 1 **Çoklu ürün çapraz listesi bölüm 1 tedir**
Αντιστοιχίες προϊόντων στο κεφάλαιο 1

		CC				OE	Valeo	DIM	TECH
PEUGEOT (.../...)									
407 (.../...)									
2.0 i 16V 11438 ▸	E	1997	EW10A	+♻	03/08 ▸ 12/09	6455GY	**814090**	539 361	AL
2.2 i 16V	E	2230	EW12J4	+♻/ R134	04/04 ▸	6455FX	**817824**	560 361	AL
2.2 i 16V 11438 ▸	E	2230	EW12J4	+♻	03/08 ▸ 03/09	6455GY	**814090**	539 361	AL
3.0 i V6 24V	E	2946	ES9A	+♻/ R134	04/04 ▸	6455FX	**817824**	560 361	AL
3.0 i V6 24V 11438 ▸	E	2946	ES9A	+♻	03/08 ▸ 03/09	6455GY	**814090**	539 361	AL
1.6 HDi 16V	D	1560	DV6TED4	+♻/ R134	04/04 ▸ 02/08	6455FX	**817824**	560 361	AL
1.6 HDi 16V	D	1560	DV6TED4		04/10 ▸ 05/11	6455HV	•**814363**	574 361	AL
1.6 HDi 16V 11438 ▸	D	1560	DV6TED4	+♻	03/08 ▸	6455GY	**814090**	539 361	AL
2.0 HDi 16V	D	1997	DW10BTED4	+♻/ R134	04/04 ▸	6455FX	**817824**	560 361	AL
2.0 HDi 16V	D	1997	DW10BTED4,DW10CTED4	+♻	03/08 ▸	6455GY	**814090**	539 361	AL
2.0 HDi 16V	D	1997	DW10BTED4,DW10CTED4		08/09 ▸	6455HV	•**814363**	574 361	AL
2.2 HDi 16V	D	2179	DW12BTED4	+♻/ R134	06/06 ▸	6455EY	**817740**	669 303	AL
2.2 HDi 16V 11438 ▸	D	2179	DW12BTED4		03/08 ▸	6455GZ	**814173**		AL
2.7 HDI V6 24V	D	2720	DT17TED4	+♻/ R134	10/05 ▸	6455FX	**817824**	560 361	AL
2.7 HDi V6 24V 11438 ▸	D	2720	DT17BTED4		03/08 ▸	6455GZ	**814173**		AL
4007									
2.4 i 16V	E	2360	4B12MMC	+♻/ R134	01/08 ▸ 06/09	6455FA	**814315**	616 407	AL
2.2 HDi 16V	D	2179	DW12MTED4	+♻/ R134	07/07 ▸ 06/09	6455FA	**814315**	616 407	AL
4008									
1.6 i 115 16V	E	1590	4A92	+♻	03/12 ▸	6455HP	**814315**	616 407	AL
1.6 HDi 115 16V	D	1560	DV6C	+♻	03/12 ▸	6455HP	**814315**	616 407	AL
1.8 HDi 150 16V	D	1798	4N13	+♻	03/12 ▸	6455HP	**814315**	616 407	AL
508									
2.0 HDi Hybride 16V	L	1997	DW10CTED4, RXH		04/12 ▸	6455HV	•**814363**	574 361	AL
1.6 THP 156 16V,1.6 VTi 120 16V	E	1598	EP6C,EP6CDT		01/11 ▸	6455JA	•**814365**	574 361	AL
1.6 HDi 115,1.6 e-HDI 115 **1.6 e-HDi 112**	D	1560	DV6C		01/11 ▸	6455JA	•**814365**	574 361	AL
2.0 HDi 163 16V **2.0 HDi Hybride 16V**	D	1997	DW10CTED4		03/11 ▸	6455HV	•**814363**	574 361	AL
2.0 HDi 140 16V,2.0 HDi 163 16V	D	1997	DW10BTED4,DW10CTED4		01/11 ▸	6455JA	•**814365**	574 361	AL
2.2 HDi 204 16V	D	2179	DW12C		03/11 ▸	6455JA	•**814365**	574 361	AL
5008									
1.6 THP 16V,1.6 VTi 120 16V	E	1598	EP6, EP6C, EP6CDT	+♻/ R134	09/09 ▸	6455GH	**818171**	568 361	AL
1.6 HDi 16V	D	1560	DV6TED4	+♻/ R134	09/09 ▸	6455GH	**818171**	568 361	AL
605 (89>94)									
2.0, 2.0 i, 2.0 i Turbo	E	1998	XU10C, XU10C TR XU10J2, XU10J2TE, XU10M		09/93 ▸ 06/94	6455Y6	**816850**	552 352	AL
3.0 i V6, 3.0 i V6 24V	E	2963	ZPJ, ZPJ4		09/93 ▸ 06/94	6455Y6	**816850**	552 352	AL
3.0 i V6, 3.0 i V6 24V	E	2975	ZPJ, ZPJ4		09/93 ▸ 06/94	6455Y6	**816850**	552 352	AL
2.1 TD Turbo	D	2088	XUD11ATE, XUD11BTE		09/93 ▸ 06/94	6455Y6	**816850**	552 352	AL
2.1 D	D	2138	XUD11A		09/93 ▸ 06/94	6455Y6	**816850**	552 352	AL
605 (94>99)									
2.0, 2.0 i, 2.0 i 16V **2.0 i Turbo**	E	1998	XU10C TR, XU10J2 XU10J2CTE, XU10J2CTEL3 XU10J4R		07/94 ▸ 05/99	6455Y6	**816850**	552 352	AL
3.0 i V6 24V	E	2946	ES9J4		06/97 ▸ 05/99	6455Y6	**816850**	552 352	AL
3.0 i V6, 3.0 i V6 24V	E	2963	ZPJ, ZPJ4		07/94 ▸ 06/97	6455Y6	**816850**	552 352	AL

Valeo recommends replacing the receiver drier with the condenser
Pensez à changer la bouteille déshydratante avec le condenseur
Denken Sie daran, beim Wechsel des Kondensators auch den Trockner zu erneuern
Piense en la sustitución del filtro deshidratante con el condensador
A Valeo recomenda substituir o filtro desidratante com o condensador
Ricordatevi di sostituire il filtro disidratatore insieme al condensatore
Bij de vervanging van de condensor, vervang tevens de filter-droger

Valeo zaleca wymianę filtra osuszacza wraz ze skraplaczem
Рекомендируем замену осушителя вместо с конденсором
Spolu s kondenzátorem je nutné vyměnit také vysoušeč
Nu uitați sa schimbați uscatorul cu condensatorul
Kondenser değişimlerinde nem alıcının da değiştirilmesi gerektiğini dikkate alınız
Πρέπει να αντικαταστήσετε το φίλτρο υγρού μαζί με το συμπυκνωτή

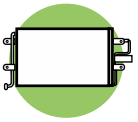

		CC				OE	Valeo	DIM	TECH
PEUGEOT (.../...)									
605 (94>99) (.../...)									
2.1 TD Turbo	D	2088	XUD11ATE, XUD11BTE		07/94 ▸ 05/99	6455Y6	**816850**	552 352	AL
2.5 TD	D	2446	DK5ATE		07/94 ▸ 05/99	6455Y6	**816850**	552 352	AL
607 (2000>2004)									
2.0 i 16V	E	1997	EW10J4	R134	05/00 ▸ 09/04	6455CQ	**817667**	518 361	AL
2.2 i 16V	E	2230	EW12J4	R134	05/00 ▸ 09/04	6455CQ	**817667**	518 361	AL
3.0 i V6 24V	E	2946	ES9J4S	R134	05/00 ▸ 09/04	6455AS	**817667**	518 361	AL
2.0 HDi	D	1997	DW10ATED	R134	05/00 ▸ 09/04	6455CQ	**817667**	518 361	AL
2.2 HDi 16V	D	2179	DW12TED4	R134	05/00 ▸ 09/04	6455AS	**817667**	518 361	AL
607 (2004>)									
2.2 i 16V	E	2230	EW12J4	R134	10/04 ▸	6455CQ	**817667**	518 361	AL
3.0 i V6 24V	E	2946	ES9A	R134	10/04 ▸	6455CQ	**817667**	518 361	AL
2.0 HDi	D	1997	DW10ATED	R134	10/04 ▸	6455CQ	**817667**	518 361	AL
2.2 HDi 16V	D	2179	DW12BTED4, DW12TED4	R134	10/04 ▸	6455CQ	**817667**	518 361	AL
2.2 HDi 16V Auto	D	2179	DW12BTED4	R134	10/04 ▸	6455EY	**817740**	669 303	AL
2.7 HDi 24V	D	2720	DT17TED4	R134	10/04 ▸	6455EY	**817740**	669 303	AL
806 (94>98)									
1.8 i	E	1761	XU7JP		06/95 ▸ 09/98	6455Y3	**816852**	690 462	AL
2.0 i, 2.0 i Turbo	E	1998	XU10J2C, XU10J2CTE XU10J2CTEL3		07/94 ▸ 09/98	6455Y3	**816852**	690 462	AL
1.9 TD	D	1905	XUD9BTF, XUD9TE, XUD9TEF		08/94 ▸ 09/98	6455Y3	**816852**	690 462	AL
2.1 TD	D	2088	XUD11BTE		06/96 ▸ 09/98	6455Y3	**816852**	690 462	AL
806 (98>2002)									
1.8 i	E	1761	XU7JP		10/98 ▸ 05/02	6455Y3	**816852**	690 462	AL
2.0 i 16V	E	1997	EW10J4		07/00 ▸ 05/02	6455Y3	**816852**	690 462	AL
2.0 i, 2.0 i 16V, 2.0 i Turbo CT	E	1998	XU10J2C, XU10J2CTEL3 XU10J4R		10/98 ▸ 05/02	6455Y3	**816852**	690 462	AL
1.9 TD	D	1905	XUD9BTF		10/98 ▸ 05/02	6455Y3	**816852**	690 462	AL
2.0 HDi, 2.0 HDi 16V	D	1997	DW10ATED, DW10ATED4		08/99 ▸ 05/02	6455Y3	**816852**	690 462	AL
2.1 TD	D	2088	XUD11BTE		10/98 ▸ 05/02	6455Y3	**816852**	690 462	AL
807									
2.0 i 16V	E	1997	EW10J4	R134	06/02 ▸	6455AP	**817579**	560 450	AL
2.2 i 16V	E	2230	EW12J4	R134	06/02 ▸ 09/05	6455AP	**817579**	560 450	AL
3.0 i V6 24V	E	2946	ES9J4S	R134	06/02 ▸ 09/05	6455AQ	**817668**	712 364	AL
2.0 HDi 16V	D	1997	DW10ATED4	R134	06/02 ▸	6455AP	**817579**	560 450	AL
2.0 HDi 16V	D	1997	DW10BTED4,DW10CTED4 DW10UTED4		04/06 ▸	6455HS	•**814366**	590 361	AL
2.2 HDi 16V	D	2179	DW12TED4	R134	06/02 ▸ 02/04	6455AP	**817579**	560 450	AL
2.2 HDi 16V	D	2179	DW12BTED4		12/07 ▸	6455FW	**814065**	678 355	AL
RCZ									
1.6 THP 156 16V	E	1598	EP6CDT	R134	05/10 ▸	6455GH	**818171**	568 361	AL
PEUGEOT									
BIPPER									
1.4 i	E	1360	TU3A,TU3AE5	R134	12/07 ▸	6455GA	**818193**	552 333	AL
1.3 HDi	D	1248	F13DTE5	R134	09/10 ▸	6455GA	**818193**	552 333	AL
1.4 HDi	D	1398	DV4TED	R134	12/07 ▸	6455GA	**818193**	552 333	AL
BOXER (94>2001)									
2.0, 2.0 i	E	1998	XU102CU, XU10J2U		02/94 ▸ 12/01	6455T3	**818191**	506 349	AL
1.9 D, 1.9 TD	D	1905	XUD9A, XUD9AU, XUD9TEF XUD9UTF		02/94 ▸ 12/01	6455T3	**818191**	506 349	AL

• **New** Nouveau **Neu** Nuevo **Novo** Nuovo **Nieuw** Nowi **Новый** Novy **Nou** Yeni **Νέους**

⏭ **Multi-product Crosslist on section 1** Cross List Multi-produits, Section 1
Crossliste siehe Kapitel 1 Crosslist Multiproducto en la sección 1
Lista Multi-produto na secção 1 Cross-list Multi prodotto nella sezione 1
Rubriek 1 : Cross list "alle produkten" Kombinovaný převodník v sekci 1
Crosslist multi-produse, secţie 1 **Çoklu ürün çapraz listesi bölüm 1 tedir**
Αντιστοιχίες προϊόντων στο κεφάλαιο 1

		CC				OE	Valeo	DIM	TECH
PEUGEOT (.../...)									
BOXER (94>2001) (.../...)									
2.0 HDi	D	1997	DW10TD		09/01 ▸ 12/01	6455T3	**818191**	506 349	AL
2.5 D, 2.5 TD, 2.5 TDi	D	2446	DJ5, DJ5T, DJ5TED		02/94 ▸ 12/01	6455T3	**818191**	506 349	AL
2.8 D, 2.8 HDi, 2.8 TD	D	2798	8140-43, 8140-43S 8140-63		06/99 ▸ 12/01	6455T3	**818191**	506 349	AL
BOXER (2002>)									
2.0 i ▸ 17126575	E	1998	XU10J2U		01/02 ▸ 09/02	6455T3	**818191**	506 349	AL
2.0 i 17126576 ▸ 17520375	E	1998	XU10J2U		04/02 ▸	6455CG	**818018**	516 322	AL
2.0 i 17520376 ▸	E	1998	XU10J2U	+/ R134	04/02 ▸	6455EC	**814081**	568 341	AL
2.0 HDi ▸ 17126575	D	1997	DW10UTD		01/02 ▸ 09/02	6455T3	**818191**	506 349	AL
2.0 HDi 17126576 ▸ 17520375	D	1997	DW10UTD		04/02 ▸	6455CG	**818018**	516 322	AL
2.0 HDi 17520376 ▸	D	1997	DW10UTD	+/ R134	04/02 ▸	6455EC	**814081**	568 341	AL
2.2 HDi ▸ 17126575	D	2179	DW12TED		01/02 ▸ 09/02	6455T3	**818191**	506 349	AL
2.2 HDi 17126576 ▸ 17520375	D	2179	DW12TED		04/02 ▸	6455CG	**818018**	516 322	AL
2.2 HDi 17520376 ▸	D	2179	DW12TED	+/ R134	04/02 ▸	6455EC	**814081**	568 341	AL
2.8 HDi ▸ 17126575	D	2798	F28TDCR		01/02 ▸ 09/02	6455T3	**818191**	506 349	AL
2.8 HDi ▸ 17520375	D	2798	F28TDCR		04/02 ▸	6455CG	**818018**	516 322	AL
2.8 HDi 17520376 ▸	D	2798	F28TDCR	+/ R134	04/02 ▸	6455EC	**814081**	568 341	AL
BOXER (2006>)									
2.2 HDi	D	2229	22DT	+/ R134	07/06 ▸	6455EP	**814069**	748 291	AL
2.2 HDi 16V	D	2229	22DT		07/06 ▸	6455EQ	**814085**	710 375	AL
3.0 HDi	D	2999	F30DT	+/ R134	07/06 ▸	6455EP	**814069**	748 291	AL
EXPERT (95>2003)									
1.6 i	E	1581	160A		09/95 ▸ 12/03	6455Y3	**816852**	690 462	AL
1.8 i	E	1761	XU7JP		07/96 ▸ 12/03	6455Y3	**816852**	690 462	AL
2.0 i 16V	E	1997	EW10J4		09/00 ▸ 12/03	6455Y3	**816852**	690 462	AL
1.9 D	D	1868	DW8, DW8B		05/98 ▸ 12/03	6455Y3	**816852**	690 462	AL
1.9 D, 1.9 TD	D	1905	XUD9A, XUD9BTF, XUD9TEF		09/95 ▸ 12/03	6455Y3	**816852**	690 462	AL
2.0 HDi, 2.0 HDi 16V	D	1997	DW10ATED, DW10ATED4 DW10BTED, DW10CTED		09/00 ▸ 12/03	6455Y3	**816852**	690 462	AL
EXPERT (2003>2006)									
2.0 i 16V	E	1997	EW10J4		01/04 ▸ 12/06	6455Y3	**816852**	690 462	AL
1.9 D	D	1868	DW8B		01/04 ▸ 12/06	6455Y3	**816852**	690 462	AL
2.0 HDi 16V	D	1997	DW10ATED4, DW10BTED DW10BTED+L4		01/04 ▸ 12/06	6455Y3	**816852**	690 462	AL
EXPERT II (2007>)									
2.0 i 16V	E	1997	EW10A	R134	01/07 ▸	6455AP	**817579**	560 450	AL
1.6 HDi 16V	D	1560	DV6DUM,DV6UC,DV6UTED4		01/07 ▸	6455ES	•**814366**	590 361	AL
2.0 HDi 16V	D	1997	DW10BTED4,DW10CDDTR DW10CEDTR,DW10CTED4 DW10UTED4		01/07 ▸	6455HS	•**814366**	590 361	AL
PARTNER (96>2002)									
1.1 i	E	1124	TU1M+		06/96 ▸ 06/97	6455Q9	**817230**	568 341	AL

Valeo recommends replacing the receiver drier with the condenser
Pensez à changer la bouteille déshydratante avec le condenseur
Denken Sie daran, beim Wechsel des Kondensators auch den Trockner zu erneuern
Piense en la sustitución del filtro deshidratante con el condensador
A Valeo recomenda substituir o filtro desidratante com o condensador
Ricordatevi di sostituire il filtro disidratatore insieme al condensatore
Bij de vervanging van de condensor, vervang tevens de filter-droger

Valeo zaleca wymianę filtra osuszacza wraz ze skraplaczem
Рекомендируем замену осушителя вместо с конденсором
Spolu s kondenzátorem je nutné vyměnit také vysoušeč
Nu uitați sa schimbați uscatorul cu condensatorul
Kondenser değişimlerinde nem alıcının da değiştirilmesi gerektiğini dikkate alınız
Πρέπει να αντικαταστήσετε το φίλτρο υγρού μαζί με το συμπυκνωτή

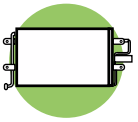

		CC				OE	Valeo	DIM	TECH
PEUGEOT (.../...)									
PARTNER (96>2002) (.../...)									
1.1 i, 1.1 i GPL 07518 ▸	E	1124	TU1JP, TU1M+		06/97 ▸ 11/02	6455AV	**817230**	568 341	AL
1.4, 1.4 i	E	1360	TU3.2, TU3JP		06/96 ▸ 06/97	6455Q9	**817230**	568 341	AL
1.4, 1.4 i, 1.4 i GPL 07518 ▸	E	1360	TU3.2, TU3JP		06/97 ▸ 11/02	6455AV	**817230**	568 341	AL
1.6 i 16V 07518 ▸	E	1587	TU5JP4		09/00 ▸ 11/02	6455AV	**817230**	568 341	AL
1.8 i	E	1761	XU7JB		05/97 ▸ 06/97	6455Q9	**817230**	568 341	AL
1.8 i 07518 ▸	E	1761	XU7JB		06/96 ▸ 11/02	6455AV	**817230**	568 341	AL
1.8 D 8721 ▸	D	1769	XUD7		09/00 ▸ 11/02	6455Y2	**817042**	630 339	AL
1.9 D 8721 ▸	D	1868	DW8, DW8B		09/00 ▸ 11/02	6455Y2	**817042**	630 339	AL
1.9 D 8721 ▸	D	1905	XUD9A		09/00 ▸ 11/02	6455Y2	**817042**	630 339	AL
2.0 HDi 8721 ▸	D	1997	DW10TD		09/00 ▸ 11/02	6455Y2	**817042**	630 339	AL
PARTNER (2002>)									
1.1 i	E	1124	TU1JP	+/ R134	11/02 ▸	6455AT	**817508**	518 364	AL
1.4 i	E	1360	TU3JP	+/ R134	11/02 ▸	6455CV	**817508**	518 364	AL
1.6 i 16V	E	1587	TU5JP4	+/ R134	11/02 ▸	6455CV	**817508**	518 364	AL
1.6 HDi 16V	D	1560	DV6ATED4, DV6BTED4	+/ R134	01/06 ▸	6455CN	**814080**	520 363	AL
1.9 D	D	1868	DW8B	+/ R134	11/02 ▸	6455CV	**817508**	518 364	AL
2.0 HDi	D	1997	DW10TD	+/ R134	11/02 ▸	6455CV	**817508**	518 364	AL
PARTNER (2008>)									
1.6 i 16V	E	1587	TU5JP4, TU5JP4B	+/ R134	05/08 ▸	6455GK	**818170**	568 361	AL
1.6 HDi 16V	D	1560	DV6ATED4, DV6AUTED4 DV6BTED4, DV6BUTED4 DV6TED4	+/ R134	05/08 ▸	6455GK	**818170**	568 361	AL
RANCH (96>2002)									
1.4 i	E	1360	TU3JP		06/96 ▸ 06/97	6455Q9	**817230**	568 341	AL
1.4 i	E	1360	TU3JP		06/97 ▸ 11/02	6455AV	**817230**	568 341	AL
1.8 i	E	1761	XU7JB		06/97 ▸ 07/97	6455Q9	**817230**	568 341	AL
1.8 i	E	1761	XU7JB		07/97 ▸ 11/02	6455CV	**817230**	568 341	AL
1.8 D	D	1769	XUD7		07/99 ▸ 11/02	6455Y2	**817042**	630 339	AL
1.9 D	D	1868	DW8		07/99 ▸ 11/02	6455Y2	**817042**	630 339	AL
1.9 D	D	1905	XUD9A		07/99 ▸ 11/02	6455Y2	**817042**	630 339	AL
RANCH (2002>)									
1.4 i	E	1360	TU3JP	+/ R134	11/02 ▸	6455CV	**817508**	518 364	AL
1.9 D	D	1868	DW8B	+/ R134	11/02 ▸	6455CV	**817508**	518 364	AL
2.0 HDi	D	1997	DW10TD	+/ R134	11/02 ▸	6455CV	**817508**	518 364	AL
PORSCHE									
911 CARRERA (04>08)									
3.6 i 325	E	3596	M96.05		07/04 ▸ 06/08	99657311103	**814167**	360 271	AL
3.6 DFI 345 24V	E	3614	MA1.02		06/08 ▸	99657311103	**814167**	360 271	AL
3.8 DFI 385 24V,3.8 DFI 408 24V	E	3800	MA1.01		06/08 ▸	99657311103	**814167**	360 271	AL
3.8 i 355,3.8 i 381	E	3824	M97.01,M97.01S		07/04 ▸ 06/08	99657311103	**814167**	360 271	AL
911 TURBO (06>09)									
3.6 i 480 24V,3.6 i 530 24V	E	3600	M97.70,M97.70S		02/06 ▸ 12/09	99657311103	**814167**	360 271	AL
997 GT3 (2006>)									
3.6 i 415 24V	E	3600	M97.76		02/06 ▸ 01/09	99657311103	**814167**	360 271	AL

• **New** Nouveau **Neu** Nuevo **Novo** Nuovo **Nieuw** Nowi **Новый** Novy **Nou** Yeni **Νέους**

⏭ **Multi-product Crosslist on section 1** Cross List Multi-produits, Section 1
Crossliste siehe Kapitel 1 Crosslist Multiproducto en la sección 1
Lista Multi-produto na secção 1 Cross-list Multi prodotto nella sezione 1
Rubriek 1 : Cross list "alle produkten" Kombinovaný převodník v sekci 1
Crosslist multi-produse, secţie 1 **Çoklu ürün çapraz listesi bölüm 1 tedir**
Αντιστοιχίες προϊόντων στο κεφάλαιο 1

		CC				OE	Valeo	DIM	TECH
PORSCHE (.../...)									
997 GT3 (2006>) (.../...)									
3.8 i 450 24V	E	3797	M97.77		09/09 ▸	99657311103	**814167**	360 271	AL
3.8 i 435 24V	E	3800	M97.77		01/09 ▸	99657311103	**814167**	360 271	AL
BOXSTER (2004>2009)									
2.7 i 24V	E	2687	M96.25,M97.20		11/04 ▸ 11/08	99657311103	**814167**	360 271	AL
3.2 i 24V	E	3179	M96.26		11/04 ▸ 08/06	99657311103	**814167**	360 271	AL
3.4 i 24V	E	3387	M97.21,M97.22		07/06 ▸ 04/09	99657311103	**814167**	360 271	AL
BOXSTER (2008>)									
2.9 i 24V	E	2893	MA1.20		11/08 ▸	99657311103	**814167**	360 271	AL
3.4 i 24V	E	3436	MA1.21,MA1.21C		11/08 ▸	99657311103	**814167**	360 271	AL
CAYENNE (2003>2006)									
3.2 i V6 24V	E	3189	M02.2Y		03/03 ▸ 12/06	95557311101	•**817838**	740 391	AL
4.5 i V8 32V,4.5 i V8 Turbo 32V	E	4511	M48.00,M48.50		03/03 ▸ 12/06	95557311101	•**817838**	740 391	AL
CAYENNE (2008>)									
2.9 i 265 24V	E	2893	MA1.20C		11/08 ▸	99657311103	**814167**	360 271	AL
3.4 i 320 24V,3.4 i 330 24V	E	3436	MA1.21C		11/08 ▸	99657311103	**814167**	360 271	AL
CAYMAN									
2.7 i	E	2687	M97.20		07/06 ▸ 11/08	99657311103	**814167**	360 271	AL
3.4 i	E	3387	M97.21		11/05 ▸ 11/08	99657311103	**814167**	360 271	AL
RENAULT									
R19									
1.8 16S, 1.8 i, 1.8 i 16S	E	1763	F7P		07/88 ▸ 10/95	7700272488	**816863**	430 376	AL
1.9 D, 1.9 TD	D	1870	F8Q		09/90 ▸ 10/95	7700272488	**816863**	430 376	AL
R21									
1.4	E	1397	C2J, C2L	R12>R134a	05/89 ▸ 01/94	7700840853	**816866**	610 278	AL
1.7, 1.7 i	E	1721	F2N, F3N	R12>R134a	03/86 ▸	7700840853	**816866**	610 278	AL
2.0	E	1965	F2R	R12>R134a	06/86 ▸ 03/92	7700840853	**816866**	610 278	AL
2.0, 2.0 i, 2.0 i Turbo	E	1995	J6R, J6T, J7R	R12>R134a	03/86 ▸ 01/94	7700840853	**816866**	610 278	AL
2.2, 2.2 i	E	2165	J7T	R12>R134a	06/86 ▸ 08/95	7700840853	**816866**	610 278	AL
1.9 D	D	1870	F8Q	R12>R134a	05/89 ▸ 03/93	7700840853	**816866**	610 278	AL
2.1 D, 2.1 TD	D	2068	J8S	R12>R134a	06/86 ▸ 08/95	7700840853	**816866**	610 278	AL
AVANTIME									
2.0 i Turbo 16V	E	1998	F4R		11/01 ▸ 03/03	6025313367	**818027**	570 394	AL
3.0 i V6 24V	E	2946	L7X		09/01 ▸ 03/03	6025313367	**818027**	570 394	AL
2.2 dCi 16V	D	2188	G9T		02/02 ▸ 03/03	6025313367	**818027**	570 394	AL
CLIO II (98>2001)									
1.2 i, 1.2 i GPL ▸ 991022	E	1149	D7F	+/ R134	03/98 ▸ 10/99	7700414103	**817171**	510 376	AL
1.2 i, 1.2 i GPL	E	1149	D7F	+/ R134	03/98 ▸ 03/01	8200106950	**817428**	514 376	AL
1.4 i, 1.4 i 16V	E	1390	E7J, K4J	+/ R134	03/98 ▸ 03/01	7700414103	**817171**	510 376	AL
1.4 i 16V	E	1390	K4J	+/ R134	09/99 ▸ 03/01	8200106950	**817428**	514 376	AL
1.6 i, 1.6 i 16V	E	1598	K4M, K7M	+/ R134	03/98 ▸ 03/01	7700414103	**817171**	510 376	AL
1.6 i 16V 991022 ▸	E	1598	K4M	+/ R134	07/98 ▸ 03/01	8200106950	**817428**	514 376	AL
2.0 i 16V	E	1998	F4R	+/ R134	01/00 ▸ 03/01	7700414103	**817171**	510 376	AL
1.9 D, 1.9 dTi	D	1870	F8Q, F9Q	+/ R134	03/98 ▸ 03/01	7700414103	**817171**	510 376	AL
1.9 dTi 991022 ▸	D	1870	F9Q	+/ R134	11/99 ▸ 03/01	8200106950	**817428**	514 376	AL
CLIO II (2001>2005)									
1.0 i	E	999	D7D	+/ R134	04/01 ▸	8200106950	**817428**	514 376	AL

Valeo recommends replacing the receiver drier with the condenser
Pensez à changer la bouteille déshydratante avec le condenseur
Denken Sie daran, beim Wechsel des Kondensators auch den Trockner zu erneuern
Piense en la sustitución del filtro deshidratante con el condensador
A Valeo recomenda substituir o filtro desidratante com o condensador
Ricordatevi di sostituire il filtro disidratatore insieme al condensatore
Bij de vervanging van de condensor, vervang tevens de filter-droger
Valeo zaleca wymianę filtra osuszacza wraz ze skraplaczem
Рекомендируем замену осушителя вместо с конденсором
Spolu s kondenzátorem je nutné vyměnit také vysoušeč
Nu uitați sa schimbați uscatorul cu condensatorul
Kondenser değişimlerinde nem alıcının da değiştirilmesi gerektiğini dikkate alınız
Πρέπει να αντικαταστήσετε το φίλτρο υγρού μαζί με το συμπυκνωτή

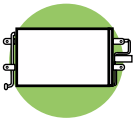

		CC				OE	Valeo	DIM	TECH
RENAULT									
CLIO II (2001>2005) (.../...)									
1.2 i, 1.2 i 16V	E	1149	D4F, D7F	+/ R134	04/01 ▸	8200106950	**817428**	514 376	AL
1.2 i, 1.2 i 16V	E	1149	D4F	+/ R134 / Multi-Exchanger	03/02 ▸	8200211563	**733075**	480 414	AL
1.4 i, 1.4 i 16V ▸ 030324	E	1390	E7J, K4J, K7J	+/ R134	04/01 ▸	8200106950	**817428**	514 376	AL
1.4 i, 1.4 i 16V	E	1390	K4J	+/ R134 / Multi-Exchanger	03/02 ▸	8200211563	**733075**	480 414	AL
1.6 i	E	1598	K7M	+/ R134	04/01 ▸	7700414103	**817171**	510 376	AL
1.6 i 16V	E	1598	K4M	+/ R134	04/01 ▸	8200106950	**817428**	514 376	AL
1.6 i, 1.6 i 16V	E	1598	K4M	+/ R134 / Multi-Exchanger	03/02 ▸	8200211563	**733075**	480 414	AL
2.0 i 16V	E	1998	F4R	+/ R134	04/01 ▸	7700414103	**817171**	510 376	AL
1.5 dCi	D	1461	K9K	50KW	04/01 ▸	7700436062	**817602**	510 380	AL
1.5 dCi ▸ 020215	D	1461	K9K	+/ R134	04/01 ▸	8200106950	**817428**	514 376	AL
1.5 dCi	D	1461	K9K	74KW	01/04 ▸	8200245598	**817646**	587 405	AL
1.9 D	D	1870	F8Q	+/ R134	04/01 ▸	7700414103	**817171**	510 376	AL
1.9 dTi	D	1870	F9Q	+/ R134	04/01 ▸	8200106950	**817428**	514 376	AL
CLIO III (2005>)									
1.6 i 16V	E	1598	K4M	+/ R134	09/05 ▸	8200443897	**818165**	510 377	AL
2.0 i 16V	E	1998	M4R	+/ R134	09/06 ▸	8200443897	**818165**	510 377	AL
1.5 dCi	D	1461	K9K.7.72	+/ R134	09/05 ▸	8200468911	**818166**	547 377	AL
ESPACE III (96>2000)									
2.0 i	E	1998	F3R		10/96 ▸ 06/00	7700876215	**816867**	558 391	AL
2.0 i, 2.0 i 16V	E	1998	F4R		10/97 ▸ 10/02	6025313325	**818029**	660 384	AL
3.0 i V6	E	2963	Z7X		10/96 ▸ 06/98	7700876215	**816867**	558 391	AL
3.0 i V6	E	2946	L7X		07/98 ▸ 06/00	7700876215	**816867**	558 391	AL
1.9 dTi	D	1870	F9Q		01/99 ▸ 06/00	6025310510	**818028**	570 393	AL
2.2 dT ▸ 971001	D	2188	G8T		10/96 ▸	7701204731	**816839**	540 391	AL
2.2 dT	D	2188	G8T		10/97 ▸ 06/00	6025306732	**818030**	625 338	AL
ESPACE III (2000>2002)									
2.0 i 16V	E	1998	F4R		07/00 ▸ 10/02	6025313325	**818029**	660 384	AL
3.0 i V6	E	2946	L7X		07/00 ▸ 10/02	7700876215	**816867**	558 391	AL
1.9 dTi	D	1870	F9Q		07/00 ▸ 10/02	6025310510	**818028**	570 393	AL
2.2 dCi	D	2188	G9T		07/00 ▸ 10/02	6025313367	**818027**	570 394	AL
ESPACE IV (2002>2006)									
2.0 i 16V, 2.0 i Turbo 16V ▸ 040317	E	1998	F4R		09/02 ▸ 03/04	8200033733	**817731**	660 431	AL
2.0 i 16V, 2.0 i Turbo 16V 040317 ▸	E	1998	F4R		03/04 ▸ 02/06	8200332851	**814007**	698 431	AL
3.5 i V6 24V ▸ 040317	E	3498	V4Y		09/02 ▸ 03/04	8200033733	**817731**	660 431	AL
3.5 i V6 24V 040317 ▸	E	3498	V4Y		03/04 ▸ 02/06	8200332851	**814007**	698 431	AL
1.9 dCi ▸ 040317	D	1870	F9Q		09/02 ▸ 03/04	8200033733	**817731**	660 431	AL
1.9 dCi 040317 ▸	D	1870	F9Q		03/04 ▸ 02/06	8200332851	**814007**	698 431	AL
2.2 dCi 16V ▸ 040317	D	2188	G9T		09/02 ▸ 03/04	8200033733	**817731**	660 431	AL
2.2 dCi 16V 040317 ▸	D	2188	G9T		03/04 ▸ 02/06	8200332851	**814007**	698 431	AL
3.0 dCi 24V ▸ 040317	D	2958	P9X		09/02 ▸ 03/04	8200033733	**817731**	660 431	AL
3.0 dCi 24V 040317 ▸	D	2958	P9X		03/04 ▸ 02/06	8200332851	**814007**	698 431	AL
ESPACE IV (2006>)									
2.0 i 16V, 2.0 i Turbo 16V	E	1998	F4R		03/06 ▸	8200332851	**814007**	698 431	AL

• **New** Nouveau **Neu** Nuevo **Novo** Nuovo **Nieuw** Nowi **Новый** Novy **Nou** Yeni **Νέους**

⏭ **Multi-product Crosslist on section 1** Cross List Multi-produits, Section 1
Crossliste siehe Kapitel 1 Crosslist Multiproducto en la sección 1
Lista Multi-produto na secção 1 Cross-list Multi prodotto nella sezione 1
Rubriek 1 : Cross list "alle produkten" Kombinovaný převodník v sekci 1
Crosslist multi-produse, secţie 1 **Çoklu ürün çapraz listesi bölüm 1 tedir**
Αντιστοιχίες προϊόντων στο κεφάλαιο 1

		CC				OE	Valeo	DIM	TECH
RENAULT (.../...)									
ESPACE IV (2006>) (.../...)									
3.5 i V6 24V	E	3498	V4Y		03/06 ▸	8200332851	**814007**	698 431	AL
2.0 dCi 16V	D	1995	M9R		03/06 ▸	8200332851	**814007**	698 431	AL
2.2 dCi 16V	D	2188	G9T		03/06 ▸	8200332851	**814007**	698 431	AL
3.0 dCi 24V	D	2958	P9X		03/06 ▸	8200332851	**814007**	698 431	AL
LAGUNA (94>98)									
1.8	E	1794	F3P		01/94 ▸ 04/98	7701038227	**816867**	558 391	AL
2.0 S 16V	E	1948	N7Q		05/95 ▸ 04/98	7701038227	**816867**	558 391	AL
2.0	E	1998	F3R		01/94 ▸ 04/98	7701038227	**816867**	558 391	AL
3.0 V6	E	2946	L7X		05/97 ▸ 04/98	7701038227	**816867**	558 391	AL
3.0 V6	E	2963	Z7X		01/94 ▸ 04/98	7701038227	**816867**	558 391	AL
2.2 D	D	2188	G8T		03/94 ▸ 04/98	7701038227	**816867**	558 391	AL
2.2 Dt	D	2188	G8T		03/96 ▸ 04/98	7701204731	**816839**	540 391	AL
LAGUNA (98>2000)									
1.6 i 16V	E	1598	K4M		05/98 ▸ 12/00	7701045346	**818008**	595 362	AL
1.8 i 16V	E	1783	F4P		09/98 ▸ 12/00	7701045346	**818008**	595 362	AL
1.8 i	E	1794	F3P		09/99 ▸ 12/00	7701038227	**816867**	558 391	AL
2.0 i 16V	E	1948	N7Q		05/98 ▸ 12/00	7701038227	**816867**	558 391	AL
2.0 i	E	1998	F3R	83KW	05/98 ▸ 12/00	7701045346	**818008**	595 362	AL
2.0 i, 2.0 i 16V	E	1998	F4R	103KW	05/98 ▸ 12/00	7701038227	**816867**	558 391	AL
3.0 i V6	E	2946	L7X		05/98 ▸ 12/00	7701038227	**816867**	558 391	AL
1.9 dCi, 1.9 dTi	D	1870	F9Q		05/98 ▸ 12/00	7701045346	**818008**	595 362	AL
2.2 dT	D	2188	G8T		05/98 ▸ 12/00	7701204731	**816839**	540 391	AL
LAGUNA II (2001>)									
1.6 i 16V	E	1598	K4M		01/01 ▸	8200008763	**817568**	698 391	AL
1.8 i 16V	E	1783	F4P		01/01 ▸	8200008763	**817568**	698 391	AL
2.0 i 16V, 2.0 ide 16V	E	1998	F4R, F5R		01/01 ▸	8200008763	**817568**	698 391	AL
3.0 i V6 24V	E	2946	L7X		01/01 ▸	8200008763	**817568**	698 391	AL
1.9 dCi	D	1870	F9Q		01/01 ▸	8200008763	**817568**	698 391	AL
2.2 dCi 16V	D	2188	G9T		01/01 ▸	8200008763	**817568**	698 391	AL
LAGUNA II (2005>)									
1.6 i 16V	E	1598	K4M		03/05 ▸	8200332852	**814006**	660 390	AL
1.8 i 16V	E	1783	F4P		03/05 ▸	8200332852	**814006**	660 390	AL
2.0 i 16V, 2.0 i Turbo 16V	E	1998	F4R, F5R		03/05 ▸	8200332852	**814006**	660 390	AL
3.0 i V6 24V	E	2946	L7X		03/05 ▸	8200332852	**814006**	660 390	AL
1.9 dCi	D	1870	F9Q		03/05 ▸	8200332852	**814006**	660 390	AL
2.0 dCi, 2.0 dCi 16V	D	1995	M9R		07/05 ▸	8200332852	**814006**	660 390	AL
2.2 dCi, 2.2 dCi 16V	D	2188	G9T		03/05 ▸	8200332852	**814006**	660 390	AL
MÉGANE (95>99)									
1.4 i	E	1390	E7J		11/95 ▸ 02/99	7700432391	**816912**	537 348	AL
1.4 i 16V	E	1390	K4J		09/98 ▸ 02/99	7700432392	**817197**	534 388	AL
1.6 i	E	1598	K7M		11/95 ▸ 02/99	7700432391	**816912**	537 348	AL
1.6 i 16V	E	1598	K4M		06/98 ▸ 02/99	7700432392	**817197**	534 388	AL
2.0 i, 2.0 i 16V ▸ 980507	E	1998	F3R, F7R		11/95 ▸ 05/98	7700432391	**816912**	537 348	AL
2.0 i 16V, 2.0 ide 16V 980507 ▸	E	1998	F5R, F7R		05/98 ▸ 02/99	7700432392	**817197**	534 388	AL
1.9 D, 1.9 dT, 1.9 dTi	D	1870	F8Q, F9Q		11/95 ▸ 02/99	7700432391	**816912**	537 348	AL
MÉGANE (99>)									
1.4 i, 1.4 i 16V	E	1390	E7J, K4J		10/98 ▸	7700432392	**817197**	534 388	AL
1.6 i, 1.6 i 16V	E	1598	K4M, K7M		10/98 ▸	7700432392	**817197**	534 388	AL
1.8 i 16V	E	1783	F4P		10/99 ▸	7700432392	**817197**	534 388	AL
2.0 i 16V, 2.0 ide 16V	E	1998	F5R, F7R		02/99 ▸ 09/02	7700432392	**817197**	534 388	AL
2.0 i 16V	E	1998	F4R		11/01 ▸	8200182361	**817701**	538 388	AL

Valeo recommends replacing the receiver drier with the condenser
Pensez à changer la bouteille déshydratante avec le condenseur
Denken Sie daran, beim Wechsel des Kondensators auch den Trockner zu erneuern
Piense en la sustitución del filtro deshidratante con el condensador
A Valeo recomenda substituir o filtro desidratante com o condensador
Ricordatevi di sostituire il filtro disidratatore insieme al condensatore
Bij de vervanging van de condensor, vervang tevens de filter-droger

Valeo zaleca wymianę filtra osuszacza wraz ze skraplaczem
Рекомендируем замену осушителя вместо с конденсором
Spolu s kondenzátorem je nutné vyměnit také vysoušeč
Nu uitați sa schimbați uscatorul cu condensatorul
Kondenser değişimlerinde nem alıcının da değiştirilmesi gerektiğini dikkate alınız
Πρέπει να αντικαταστήσετε το φίλτρο υγρού μαζί με το συμπυκνωτή

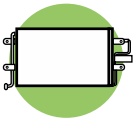

		CC				OE	Valeo	DIM	TECH
RENAULT									
MÉGANE (99>) (.../...)									
1.9 D ▸ 990226	D	1870	F8Q		10/98 ▸ 02/99	7700432391	**816912**	537 348	AL
1.9 D, 1.9 dCi, 1.9 dTi	D	1870	F8Q, F9Q		10/98 ▸	7700432392	**817197**	534 388	AL
MÉGANE SCÉNIC (96>99)									
1.4 i	E	1390	E7J		10/96 ▸ 06/98	7700432391	**816912**	537 348	AL
1.4 i, 1.4 i 16V	E	1390	E7J, K4J		07/98 ▸ 09/99	7700432392	**817197**	534 388	AL
1.4 i 16V	E	1390	K4J		02/99 ▸ 09/99	7700434383	**817509**	538 381	AL
1.6 i	E	1598	K7M		10/96 ▸ 05/98	7700432391	**816912**	537 348	AL
1.6 i ▸ 980507	E	1598	K7M		05/98 ▸ 09/99	7700432392	**817197**	534 388	AL
2.0 i ▸ 980507	E	1998	F3R		10/96 ▸ 05/98	7700432391	**816912**	537 348	AL
2.0 i	E	1998	F3R		05/98 ▸ 09/99	7700432392	**817197**	534 388	AL
1.9 D, 1.9 dT, 1.9 dTi	D	1870	F8Q, F9Q		10/96 ▸ 09/99	7700432391	**816912**	537 348	AL
1.9 dTi	D	1870	F9Q		04/97 ▸ 09/99	7700434383	**817509**	538 381	AL
1.9 D, 1.9 dT, 1.9 dTi ▸ 980507	D	1870	F8Q, F9Q		05/98 ▸ 09/99	7700432392	**817197**	534 388	AL
MÉGANE SCÉNIC (99>2003)									
1.4 i 16V ▸ 010716	E	1390	K4J		09/99 ▸ 07/01	7700434383	**817509**	538 381	AL
1.4 i 16V 010716 ▸	E	1390	K4J		07/01 ▸ 04/03	8200182361	**817701**	538 388	AL
1.6 i 16V ▸ 010716	E	1598	K4M		09/99 ▸ 07/01	7700434383	**817509**	538 381	AL
1.6 i 16V 010716 ▸	E	1598	K4M		07/01 ▸ 04/03	8200182361	**817701**	538 388	AL
1.8 i 16V ▸ 010716	E	1783	F4P		09/99 ▸ 07/01	7700434383	**817509**	538 381	AL
1.8 i 16V 010716 ▸	E	1783	F4P		07/01 ▸ 04/03	8200182361	**817701**	538 388	AL
2.0 i 16V	E	1998	F4R		09/99 ▸ 03/01	7700432392	**817197**	534 388	AL
2.0 i 16V ▸ 010716	E	1998	F4R		09/99 ▸ 07/01	7700434383	**817509**	538 381	AL
2.0 i 16V 010716 ▸	E	1998	F4R		07/01 ▸ 04/03	8200182361	**817701**	538 388	AL
1.9 dCi, 1.9 dTi ▸ 010716	D	1870	F9Q		09/99 ▸ 07/01	7700434383	**817509**	538 381	AL
1.9 dCi, 1.9 dTi 010716 ▸	D	1870	F9Q		07/01 ▸ 04/03	8200182361	**817701**	538 388	AL
MÉGANE II									
1.4 i 16V	E	1390	K4J		09/02 ▸	8200115543	**817608**	615 396	AL
1.6 i 16V	E	1598	K4M		09/02 ▸	8200115543	**817608**	615 396	AL
2.0 i 16V, 2.0 i Turbo 16V	E	1998	F4R		09/02 ▸	8200115543	**817608**	615 396	AL
1.5 dCi	D	1461	K9K		09/02 ▸	8200115543	**817608**	615 396	AL
1.9 dCi	D	1870	F9Q		09/02 ▸	8200115543	**817608**	615 396	AL
2.0 dCi	D	1995	M9R		01/06 ▸	8200325004	**818002**	626 414	AL
MÉGANE III									
1.4 TCe 130 16V	E	1397	H4J		04/09 ▸ 09/10	921100001R	**814094**	652 350	AL
1.6 i 100 16V, 1.6 i 110 16V	E	1598	K4M		10/08 ▸ 09/10	921100001R	**814094**	652 350	AL
2.0 i 140 16V	E	1997	M4R		10/08 ▸ 09/10	921100001R	**814094**	652 350	AL
2.0 TCe 180 16V	E	1998	F4R		10/08 ▸ 09/10	921100001R	**814094**	652 350	AL
1.5 dCi 105, 1.5 dCi 110 1.5 dCi 85, 1.5 dCi 90	D	1461	K9K		10/08 ▸ 09/10	921100001R	**814094**	652 350	AL
1.9 dCi 130	D	1870	F9Q		10/08 ▸ 09/10	921100001R	**814094**	652 350	AL
2.0 dCi 150, 2.0 dCi 160	D	1995	M9R		10/08 ▸ 09/10	921100001R	**814094**	652 350	AL

• **New** Nouveau **Neu** Nuevo **Novo** Nuovo **Nieuw** Nowi **Новый** Novy **Nou** Yeni **Νέους**

⏭ **Multi-product Crosslist on section 1** Cross List Multi-produits, Section 1
Crossliste siehe Kapitel 1 Crosslist Multiproducto en la sección 1
Lista Multi-produto na secção 1 Cross-list Multi prodotto nella sezione 1
Rubriek 1 : Cross list "alle produkten" Kombinovaný převodník v sekci 1
Crosslist multi-produse, secţie 1 **Çoklu ürün çapraz listesi bölüm 1 tedir**
Αντιστοιχίες προϊόντων στο κεφάλαιο 1

		CC				OE	Valeo	DIM	TECH
RENAULT (.../...)									
MÉGANE III (.../...)									
1.4 TCe 130 16V	E	1397	H4J		10/10 ▸	921000294R	**814187**	652 349	AL
1.6 i 100 16V, 1.6 i 110 16V	E	1598	K4M		10/10 ▸	921000294R	**814187**	652 349	AL
2.0 i 140 16V	E	1997	M4R		10/10 ▸	921000294R	**814187**	652 349	AL
2.0 TCe 180 16V	E	1998	F4R		10/10 ▸	921000294R	**814187**	652 349	AL
1.5 dCi 105, 1.5 dCi 110 1.5 dCi 85, 1.5 dCi 90	D	1461	K9K		10/10 ▸	921000294R	**814187**	652 349	AL
1.9 dCi 130	D	1870	F9Q		10/10 ▸	921000294R	**814187**	652 349	AL
2.0 dCi 150, 2.0 dCi 160	D	1995	M9R		10/10 ▸	921000294R	**814187**	652 349	AL
MODUS									
1.4 i 100 16V	E	1390	K4J	+R134	01/08 ▸	8200688393	**818165**	510 377	AL
1.6 i 110 16V	E	1598	K4M	+R134	01/08 ▸	8200688392	**818166**	547 377	AL
1.5 dCi	D	1461	K9K.7.72	+R134	01/08 ▸	8200688392	**818166**	547 377	AL
SAFRANE									
2.1 Dt	D	2068	J8S	+R134	06/95 ▸ 09/96	7701039742	**816865**	530 437	AL
2.5 Dt	D	2445	S8U	+R134	04/93 ▸ 09/96	7701039742	**816865**	530 437	AL
SCÉNIC II									
1.4 i 16V	E	1390	K4J		05/03 ▸	8200115543	**817608**	615 396	AL
1.6 i 16V	E	1598	K4M		05/03 ▸	8200115543	**817608**	615 396	AL
2.0 i 16V, 2.0 i Turbo 16V	E	1998	F4R		05/03 ▸	8200115543	**817608**	615 396	AL
1.5 dCi	D	1461	K9K		05/03 ▸	8200115543	**817608**	615 396	AL
1.9 dCi	D	1870	F9Q		05/03 ▸	8200115543	**817608**	615 396	AL
2.0 dCi	D	1995	M9R		01/06 ▸	8200325004	**818002**	626 414	AL
SCÉNIC III									
1.4 TCE 130 16V	E	1397	H4J		04/09 ▸ 09/10	921100001R	**814094**	652 350	AL
1.6 i 110 16V	E	1598	K4M		04/09 ▸ 09/10	921100001R	**814094**	652 350	AL
2.0 i 140 16V	E	1997	M4R		04/09 ▸ 09/10	921100001R	**814094**	652 350	AL
1.5 dCi 105, 1.5 dCi 110 1.5 dCi 85	D	1461	K9K		04/09 ▸ 09/10	921100001R	**814094**	652 350	AL
1.9 dCi 130	D	1870	F9Q		04/09 ▸ 09/10	921100001R	**814094**	652 350	AL
2.0 dCi 150, 2.0 dCi 160	D	1995	M9R		04/09 ▸ 09/10	921100001R	**814094**	652 350	AL
1.4 TCe 130 16V	E	1397	H4J		10/10 ▸	921000294R	**814187**	652 349	AL
1.6 i 100 16V, 1.6 i 110 16V	E	1598	K4M		10/10 ▸	921000294R	**814187**	652 349	AL
2.0 i 140 16V	E	1997	M4R		10/10 ▸	921000294R	**814187**	652 349	AL
2.0 TCe 180 16V	E	1998	F4R		10/10 ▸	921000294R	**814187**	652 349	AL
1.5 dCi 105, 1.5 dCi 110 1.5 dCi 85, 1.5 dCi 90	D	1461	K9K		10/10 ▸	921000294R	**814187**	652 349	AL
1.9 dCi 130	D	1870	F9Q		10/10 ▸	921000294R	**814187**	652 349	AL
2.0 dCi 150, 2.0 dCi 160	D	1995	M9R		10/10 ▸	921000294R	**814187**	652 349	AL
SYMBOLE-THALIA (2008>)									
1.2 i 16V	E	1149	D4F	+R134	10/08 ▸	8200757789	**817428**	514 376	AL
1.4 i,1.4 i 16V	E	1390	K4J,K7J	+R134	10/08 ▸	8200757789	**817428**	514 376	AL
1.6 i,1.6 i 16V	E	1598	K4M,K7M	+R134	10/08 ▸	8200757789	**817428**	514 376	AL
1.5 dCi	D	1461	K9K	+R134	10/08 ▸	8200757789	**817428**	514 376	AL
THALIA (2008>)									
1.2 i 16V	E	1149	D4F	+R134	10/08 ▸	8200757789	**817428**	514 376	AL
1.4 i 16V	E	1390	K4J	+R134	10/08 ▸	8200757789	**817428**	514 376	AL
1.6 i 16V	E	1598	K4M	+R134	10/08 ▸	8200757789	**817428**	514 376	AL
1.5 dCi	D	1461	K9K	+R134	10/08 ▸	8200757789	**817428**	514 376	AL
TWINGO (93>98)									
1.2 i 980430 ▸	E	1149	D7F		05/98 ▸ 08/98	7700428315	**817799**	418 391	AL
TWINGO II (98>2007)									
1.2 i, 1.2 i 16V	E	1149	D4F, D7F		09/98 ▸	7700433077	**817799**	418 391	AL

Valeo recommends replacing the receiver drier with the condenser
Pensez à changer la bouteille déshydratante avec le condenseur
Denken Sie daran, beim Wechsel des Kondensators auch den Trockner zu erneuern
Piense en la sustitución del filtro deshidratante con el condensador
A Valeo recomenda substituir o filtro desidratante com o condensador
Ricordatevi di sostituire il filtro disidratatore insieme al condensatore
Bij de vervanging van de condensor, vervang tevens de filter-droger
Valeo zaleca wymianę filtra osuszacza wraz ze skraplaczem
Рекомендируем замену осушителя вместо с конденсором
Spolu s kondenzátorem je nutné vyměnit také vysoušeč
Nu uitați sa schimbați uscatorul cu condensatorul
Kondenser değişimlerinde nem alıcının da değiştirilmesi gerektiğini dikkate alınız
Πρέπει να αντικαταστήσετε το φίλτρο υγρού μαζί με το συμπυκνωτή

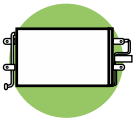

		CC				OE	Valeo	DIM	TECH
RENAULT (.../...)									
TWINGO III (2007>)									
1.2 i, 1.2 i 16V	E	1149	D4F, D7F	+/ R134	07/07 ▸	8200448252	**814061**	513 396	AL
1.6 i 16V	E	1598	K4M	+	06/08 ▸	8200448252	**814061**	513 396	AL
1.5 dCi	D	1461	K9K	+	07/07 ▸	8200448252	**814061**	513 396	AL
VEL SATIS (2002>2005)									
2.0 i Turbo 16V	E	1998	F4R		01/02 ▸ 01/05	8200152728	**817568**	698 391	AL
3.5 i V6 24V	E	3498	V4Y		01/02 ▸ 01/05	8200152728	**817568**	698 391	AL
2.2 dCi 16V	D	2188	G9T		01/02 ▸ 01/05	8200152728	**817568**	698 391	AL
3.0 dCi V6	D	2958	P9X		01/02 ▸ 01/05	8200152728	**817568**	698 391	AL
VEL SATIS (2005>)									
2.0 i Turbo 16V	E	1998	F4R		02/05 ▸	8200332852	**814006**	660 390	AL
3.5 i V6 24V	E	3498	V4Y		02/05 ▸	8200332852	**814006**	660 390	AL
2.0 dCi FAP 16V	D	1995	M9R		01/06 ▸	8200332852	**814006**	660 390	AL
2.2 dCi 16V	D	2188	G9T		02/05 ▸	8200332852	**814006**	660 390	AL
3.0 dCi V6 24V	D	2958	P9X		02/05 ▸	8200332852	**814006**	660 390	AL
RENAULT									
KANGOO (97>2003)									
1.2 i 991217 ▸	E	1149	D7F	+/ R134	03/98 ▸ 02/03	8200106950	**817428**	514 376	AL
1.4 i 991217 ▸	E	1390	E7J	+/ R134	02/99 ▸ 02/03	8200106950	**817428**	514 376	AL
1.6 i 16V	E	1598	K4M	+/ R134	01/02 ▸ 02/03	8200106950	**817428**	514 376	AL
KANGOO (2003>)									
1.2 i	E	1149	D7F	+/ R134	03/03 ▸	8200106950	**817428**	514 376	AL
1.2 i, 1.2 i 16V	E	1149	D4F, D7F	+/ R134	03/03 ▸	8200708130	**817661**	550 380	AL
1.4 i	E	1390	K7J	+/ R134	03/03 ▸	8200708130	**817661**	550 380	AL
1.6 i 16V	E	1598	K4M	+/ R134	03/03 ▸	8200708130	**817661**	550 380	AL
1.6 i 16V	E	1598	K4M	+/ R134	03/03 ▸ 09/03	8200106950	**817428**	514 376	AL
1.5 dCi	D	1461	K9K		03/03 ▸	8200137650	**817687**	504 340	AL
1.5 dCi	D	1461	K9K	+/ R134	03/03 ▸	8200708130	**817661**	550 380	AL
1.9 D, 1.9 dCi, 1.9 dTi	D	1870	F8Q, F9Q	+/ R134	03/03 ▸	8200708128	**817662**	550 380	AL
MASCOTT									
2.8 TD, 2.8 dti	D	2800	8140-43C, 8140-43S		07/99 ▸	5010382644	**817379**	510 437	AL
MASTER (97>2003)									
1.9 dCi, 1.9 dTi ▸ 030131	D	1870	F9Q		02/01 ▸ 01/03	7701052120	**817742**	690 376	AL
1.9 dCi, 1.9 dTi 030131 ▸	D	1870	F9Q		01/03 ▸ 11/03	7701049665	**817601**	690 376	AL
1.9 dCi	D	1870	F9Q		11/03 ▸	7701057122	**817689**	694 381	AL
2.2 dCi	D	2188	G9T		11/00 ▸ 09/03	7701049665	**817601**	690 376	AL
2.5 D	D	2445	S8U		09/97 ▸ 09/03	7701044406	**817065**	690 376	AL
2.5 dCi	D	2463	G9U		12/00 ▸ 09/03	7701049665	**817601**	690 376	AL
2.5 dCi	D	2463	G9U		12/00 ▸ 09/03	7701052120	**817742**	690 376	AL
MASTER (2003>)									
1.9 dCi	D	1870	F9Q		10/03 ▸	7701057122	**817689**	694 381	AL
2.2 dCi	D	2188	G9T		10/03 ▸	7701057122	**817689**	694 381	AL
2.5 dCi	D	2463	G9U		10/03 ▸	7701057122	**817689**	694 381	AL
3.0 dCi	D	2953	ZD3		10/03 ▸	7701057122	**817689**	694 381	AL
MASTER (2006>)									
2.5 dCi 114, 2.5 dCi 100	D	2463	G9U		06/06 ▸	7701057122	**817689**	694 381	AL
2.5 dCi 146	D	2463	G9U		06/06 ▸	7701066110	**814003**	694 377	AL
MASTER (2010 >)									
2.3 dCi	D	2298	M9T6.70/76/78/80/90/92/94/98		04/10 ▸	921005824R	**814179**	760 350	AL

• **New** Nouveau **Neu** Nuevo **Novo** Nuovo **Nieuw** Nowi **Новый** Novy **Nou** Yeni **Νέους**

⏭ **Multi-product Crosslist on section 1** Cross List Multi-produits, Section 1
Crossliste siehe Kapitel 1 Crosslist Multiproducto en la sección 1
Lista Multi-produto na secção 1 Cross-list Multi prodotto nella sezione 1
Rubriek 1 : Cross list "alle produkten" Kombinovaný převodník v sekci 1
Crosslist multi-produse, secţie 1 **Çoklu ürün çapraz listesi bölüm 1 tedir**
Αντιστοιχίες προϊόντων στο κεφάλαιο 1

		CC				OE	Valeo	DIM	TECH
RENAULT (.../...)									
TRAFIC (2001>)									
2.0 i 16V	E	1998	F4R		04/01 ▸	7700312901	**817577**	574 437	AL
2.0 i 16V	E	1998	F4R		04/01 ▸	8200073912	**817644**	573 442	AL
1.9 dCi	D	1870	F9Q		04/01 ▸	7700312901	**817577**	574 437	AL
1.9 dCi	D	1870	F9Q		04/01 ▸	8200073912	**817644**	573 442	AL
2.5 dCi 16V	D	2463	G9U		09/02 ▸	8200019382	**817645**	658 411	AL
TRAFIC (2006>)									
2.0 i 16V	E	1998	F4R		07/06 ▸	8200465490	**814172**	545 440	AL
2.5 dCi	D	2464	G9U		07/06 ▸	8200774211	**814171**		AL
RENAULT TRUCKS									
AE									
380, 385TI	D	12000	MIDR063540		01/90 ▸	5000752789	**816962**	759 406	AL
390	D		E7		01/90 ▸	5000752789	**816962**	759 406	AL
420TI	D	12000	MIDR063540		01/92 ▸	5000752789	**816962**	759 406	AL
430, 470	D		E7		01/92 ▸	5000752789	**816962**	759 406	AL
500, 520, 560	D		E9		01/90 ▸	5000752789	**816962**	759 406	AL
500, 520, 560	D		EE9		01/92 ▸	5000752789	**816962**	759 406	AL
KERAX									
255	D				12/98 ▸	5010315281	**816980**	590 462	AL
260	D		MIDR062045		12/98 ▸	5010315281	**816980**	590 462	AL
260	D				12/98 ▸	5010315281	**816980**	590 462	AL
298	D				12/98 ▸	5010315281	**816980**	590 462	AL
338	D				12/98 ▸	5010315281	**816980**	590 462	AL
340	D				12/98 ▸	5010315281	**816980**	590 462	AL
380	D				12/98 ▸	5010315281	**816980**	590 462	AL
MAGNUM									
400, 440, 480	D	12000	MACK E-TECH A/46-B/46-C/46		05/00 ▸	5010315372	**818172**		AL
MASCOTT I									
2.8 TD, 2.8 dti	D	2800	8140-43C, 8140-43S		07/99 ▸	5010382644	**817379**	510 437	AL
PREMIUM									
210	D	6200	MIDR060226		06/96 ▸ 06/97	5010230214	**816980**	590 462	AL
210	D	6200	MIDR060226		06/97 ▸	5010315281	**816980**	590 462	AL
250	D	6200	MIDR062026		06/96 ▸ 06/97	5010230214	**816980**	590 462	AL
250	D	6200	MIDR062026		06/97 ▸	5010315281	**816980**	590 462	AL
260	D	9800	MIDR062045C4		06/96 ▸ 06/97	5010230214	**816980**	590 462	AL
260	D	9800	MIDR062045C4		06/97 ▸	5010315281	**816980**	590 462	AL
260	D	9800	MIDR062045C4		06/96 ▸ 06/97	5010230214	**816980**	590 462	AL
260	D	9800	MIDR062045C4		06/97 ▸	5010315281	**816980**	590 462	AL
300	D	9800	MIDR062045D41		06/96 ▸ 06/97	5010230214	**816980**	590 462	AL
300	D	9800	MIDR062045D41		06/97 ▸	5010315281	**816980**	590 462	AL
300	D	9800	MIDR062045		06/96 ▸ 06/97	5010230214	**816980**	590 462	AL
300	D	9800	MIDR062045		06/97 ▸	5010315281	**816980**	590 462	AL
340	D	9800	MIDR062045		06/96 ▸ 06/97	5010230214	**816980**	590 462	AL
340	D	9800	MIDR062045		06/97 ▸	5010315281	**816980**	590 462	AL
340	D	9800	MIDR062045		06/96 ▸ 06/97	5010230214	**816980**	590 462	AL
340	D	9800	MIDR062045		06/97 ▸	5010315281	**816980**	590 462	AL
385	D	11000	MIDR02356		06/96 ▸ 06/97	5010230214	**816980**	590 462	AL
385	D	11000	MIDR02356		06/97 ▸	5010315281	**816980**	590 462	AL
385	D	11000	MIDR02356		06/96 ▸ 06/97	5010230214	**816980**	590 462	AL
385	D	11000	MIDR02356		06/97 ▸	5010315281	**816980**	590 462	AL

Valeo recommends replacing the receiver drier with the condenser
Pensez à changer la bouteille déshydratante avec le condenseur
Denken Sie daran, beim Wechsel des Kondensators auch den Trockner zu erneuern
Piense en la sustitución del filtro deshidratante con el condensador
A Valeo recomenda substituir o filtro desidratante com o condensador
Ricordatevi di sostituire il filtro disidratatore insieme al condensatore
Bij de vervanging van de condensor, vervang tevens de filter-droger

Valeo zaleca wymianę filtra osuszacza wraz ze skraplaczem
Рекомендируем замену осушителя вместо с конденсором
Spolu s kondenzátorem je nutné vyměnit také vysoušeč
Nu uitați sa schimbați uscatorul cu condensatorul
Kondenser değişimlerinde nem alıcının da değiştirilmesi gerektiğini dikkate alınız
Πρέπει να αντικαταστήσετε το φίλτρο υγρού μαζί με το συμπυκνωτή

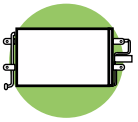

		CC				OE	Valeo	DIM	TECH
ROVER									
25 (99>)									
1.1 i 16V	E	1119	11K4F4	R134	03/01 ▸	JRB100310	**816921**	570 294	AL
1.4 i 16V	E	1396	14K4F4		12/99 ▸	JRB100310	**816921**	570 294	AL
1.6 i 16V	E	1588	16K4F4		12/99 ▸	JRB100310	**816921**	570 294	AL
1.8 i 16V	E	1796	18K16, 18K4		12/99 ▸	JRB100310	**816921**	570 294	AL
2.0 D	D	1996	20T2N		12/99 ▸	JRB100310	**816921**	570 294	AL
45 (2000>2004)									
1.4 i 16V	E	1396	14K4F4		01/00 ▸ 05/04	JRB100310	**816921**	570 294	AL
1.6 i 16V	E	1589	16K4F4		01/00 ▸ 05/04	JRB100310	**816921**	570 294	AL
1.8 i 16V	E	1796	18K4F		01/00 ▸ 05/04	JRB100310	**816921**	570 294	AL
2.0 i V6 24V	E	1997	20K6F		01/00 ▸ 05/04	JRB100310	**816921**	570 294	AL
2.0 iDT	D	1994	20T2N		01/00 ▸ 05/04	JRB100310	**816921**	570 294	AL
200 (89>95)									
214	E	1396	14K2D, 14K4F4		10/92 ▸ 11/95	JRB100190	**818031**	330 330	AL
216	E	1590	D16A8, D16A9, D16Z2		10/92 ▸ 11/95	JRB100190	**818031**	330 330	AL
200 (95>99)									
214	E	1396	14K2F, 14K4F4		11/95 ▸ 11/99	JRB100310	**816921**	570 294	AL
216	E	1589	16K4F4		11/95 ▸ 11/99	JRB100310	**816921**	570 294	AL
220	E	1796	18K16		10/96 ▸ 11/99	JRB100310	**816921**	570 294	AL
220 D	D	1994	20T2N, 20T2R		11/95 ▸ 11/99	JRB100310	**816921**	570 294	AL
Cabriolet, Coupé	E	1589	16K4F4		03/96 ▸	JRB100310	**816921**	570 294	AL
Coupé	E	1796	18K4K		03/96 ▸	JRB100310	**816921**	570 294	AL
400 (90>95)									
414	E	1396	14K4F4		10/92 ▸ 04/95	JRB100190	**818031**	330 330	AL
416	E	1590	D16A7, D16Z2		10/92 ▸ 04/95	JRB100190	**818031**	330 330	AL
420	E	1994	20M4F	R134	11/91 ▸ 09/92	JRB100190	**818031**	330 330	AL
400 (95>)									
414	E	1396	14K4F4		05/95 ▸ 03/00	JRB100310	**816921**	570 294	AL
416	E	1589	16K4F4		05/95 ▸ 03/00	JRB100310	**816921**	570 294	AL
420	E	1994	20T4H		11/95 ▸ 03/00	JRB100310	**816921**	570 294	AL
420 D	D	1994	20T2N, 20T2R		11/95 ▸ 03/00	JRB100310	**816921**	570 294	AL
600									
618	E	1850	F18A3	N	03/96 ▸ 06/00	JRB100180	**817781**	605 310	AL
620	E	1997	F20Z1,F20Z2	N	04/93 ▸ 06/00	JRB100180	**817781**	605 310	AL
623	E	2259	H23A3	N	10/93 ▸ 06/00	JRB100180	**817781**	605 310	AL
SAAB									
900 (79>93)									
2.0,2.0 T Turbo,2.0 T Turbo 16V **2.0 i,2.0 i 16V**	E	1985	B201C,B201I,B201S,B201T B202I,B202L,B202S		08/85 ▸ 06/93	4382396	**814317**	603 307	AL
900 (93>)									
2.0 16V, 2.0 Turbo	E	1985	B204I, B204L, B206I		07/93 ▸ 02/98	4634937	**817507**	506 328	AL
2.3 16V	E	2290	B234I		07/93 ▸ 02/98	4634937	**817507**	506 328	AL
2.5 V6	E	2498	B258I		07/93 ▸ 02/98	4634937	**817507**	506 328	AL
9-3 (2002>)									
1.8 i 16V	E	1796	Z18XE	+/ R134	11/03 ▸	24418362	**817647**	658 411	AL
1.8 t Turbo 16V, 2.0 T Turbo 16V	E	1998	B207E, B207L, B207R	+/ R134	09/02 ▸	12793296	**817711**	625 412	AL
1.9 TiD 16V	D	1910	Z19DT, Z19DTH	+/ R134	06/04 ▸	13114943	**817809**	619 417	AL
1.9 TiD 16V	D	1910	Z19DT, Z19DTH	+/ R134	06/04 ▸	12804660	**818175**	625 412	AL
2.2 TiD 16V	D	2171	D223L-125	+/ R134	09/02 ▸	12793295	**817712**	625 412	AL
9-5 (2001>2004)									
2.0 i Turbo 16V ▸ 33017759	E	1985	B205E-D4, B205E-E2		09/01 ▸ 01/03	5048350	**814000**	586 358	AL

• **New** Nouveau **Neu** Nuevo **Novo** Nuovo **Nieuw** Nowi **Новый** Novy **Nou** Yeni **Νέους**

⏭ **Multi-product Crosslist on section 1** Cross List Multi-produits, Section 1
Crossliste siehe Kapitel 1 Crosslist Multiproducto en la sección 1
Lista Multi-produto na secção 1 Cross-list Multi prodotto nella sezione 1
Rubriek 1 : Cross list "alle produkten" Kombinovaný převodník v sekci 1
Crosslist multi-produse, secţie 1 **Çoklu ürün çapraz listesi bölüm 1 tedir**
Αντιστοιχίες προϊόντων στο κεφάλαιο 1

		CC				OE	Valeo	DIM	TECH
SAAB (.../...)									
9-5 (2001>2004) (.../...)									
2.3 T Turbo 16V, 2.3 i Turbo 16V ▸ 33017759	E	2290	B235-D4/E2, B235L-D4/E2		09/01 ▸ 01/03	5048350	**814000**	586 358	AL
3.0 i V6 Turbo 24V ▸ 33017759	E	2962	B308E		09/01 ▸ 01/03	5048350	**814000**	586 358	AL
2.2 TiD ▸ 33017759	D	2171	D223L		02/02 ▸ 01/03	5048350	**814000**	586 358	AL
3.0 TiD V6 ▸ 33017759	D	2962	D308L		01/02 ▸	5048350	**814000**	586 358	AL
9-5 (2005>)									
2.0 i Turbo 16V	E	1985	B205E-E4		02/06 ▸	5048491	**814000**	586 358	AL
2.0 i Turbo 16V	F	1985	B205L-FF		02/06 ▸	5048491	**814000**	586 358	AL
SCANIA									
SERIES -P,G,R,T									
P 310, R 310	D	8867	DC 9.13, DC 9.16,DC 9.11 DC 9.18		09/04 ▸	1446258	**818988**	720 358	AL
R 500	D	15600	DC 16.04, DC 16.19		09/04 ▸	1446258	**818988**	720 358	AL
P420	D	11716	DC 12.14, DC 12.15 DT 12.12		09/04 ▸	1446258	**818988**	720 358	AL
SERIES-4									
94 D/220	D	9000			1995 ▸	1380374	•**818992**	746 403	AL
94 D/230	D	9000			1995 ▸	1380374	•**818992**	746 403	AL
94 D/260	D	9000			1995 ▸	1380374	•**818992**	746 403	AL
94 D/310	D	9000			1995 ▸	1380374	•**818992**	746 403	AL
SEAT									
ALHAMBRA									
1.8 i 20V	E	1781	AJH		05/98 ▸ 05/00	7M0820413F	**816948**	544 366	AL
1.8 i Turbo 20V 7M-3-530 001 ▸ 7M-4-510 000	E	1781	AWC	+ R134	06/00 ▸	7M3820411D	**818004**	554 361	AL
2.0 i	E	1984	ADY		03/96 ▸ 05/00	7M0820413F	**816948**	544 366	AL
2.0 i 7M-4-510 001 ▸	E	1984	ATM	+ R134	06/00 ▸	7M3820411D	**818004**	554 361	AL
2.8 i VR6 24V ▸ 7M-3-530 000	E	2792	AUE, AYL	+ R134	06/00 ▸	7M3820411D	**818004**	554 361	AL
1.9 TDi	D	1896	1Z, AFN, AHU		03/96 ▸ 05/00	7M0820413F	**816948**	544 366	AL
1.9 TDi 7M-3-530 001 ▸ 7M-4-510 000	D	1896	ANU, ASZ, AUY	+ R134	06/00 ▸	7M3820411D	**818004**	554 361	AL
ALTEA									
1.4 i 16V	E	1390	BXW	+ R134	05/06 ▸ 12/06	1K0820411H	**817777**	584 401	AL
1.6 i	E	1595	BGU, BSE, BSF	+ R134	03/04 ▸	1K0820411H	**817777**	584 401	AL
1.8 TFSi 16V	E	1798	BYT	+ R134	10/06 ▸	1K0820411H	**817777**	584 401	AL
2.0 FSi 16V, 2.0 TFSi 16V	E	1984	BLY,BVY,BVZ,BWA, BLR	+ R134	05/04 ▸	1K0820411H	**817777**	584 401	AL
1.9 TDi	D	1896	BKC, BJB, BLS	+ R134	04/04 ▸	1K0820411H	**817777**	584 401	AL
2.0 TDi 16V	D	1968	BKD, AZV, BMN, BMN	+ R134	03/04 ▸	1K0820411H	**817777**	584 401	AL
AROSA									
1.0 i	E	999	AHT, ALD, ANV, AUC		11/99 ▸	6X0820413A	**817247**	350 358	AL
1.4 i, 1.4 i 16V 6H-Y-003 901 ▸	E	1390	AKK, AFK, ANW, AQQ AUB/D		10/99 ▸	6X0820413A	**817247**	350 358	AL
1.4 TDi	D	1422	AMF		10/99 ▸	6X0820413	**817246**	660 414	AL
CORDOBA (93>96)									
1.4 i	E	1390	AEX		09/95 ▸ 06/96	6K0820413B	**816908**	550 350	AL

Valeo recommends replacing the receiver drier with the condenser
Pensez à changer la bouteille déshydratante avec le condenseur
Denken Sie daran, beim Wechsel des Kondensators auch den Trockner zu erneuern
Piense en la sustitución del filtro deshidratante con el condensador
A Valeo recomenda substituir o filtro desidratante com o condensador
Ricordatevi di sostituire il filtro disidratatore insieme al condensatore
Bij de vervanging van de condensor, vervang tevens de filter-droger
Valeo zaleca wymianę filtra osuszacza wraz ze skraplaczem
Рекомендируем замену осушителя вместо с конденсором
Spolu s kondenzátorem je nutné vyměnit také vysoušeč
Nu uitați sa schimbați uscatorul cu condensatorul
Kondenser değişimlerinde nem alıcının da değiştirilmesi gerektiğini dikkate alınız
Πρέπει να αντικαταστήσετε το φίλτρο υγρού μαζί με το συμπυκνωτή

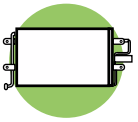

		CC				OE	Valeo	DIM	TECH

SEAT (.../...)

CORDOBA (93>96) (.../...)

1.4 i	E	1391	ABD		11/93 ▸ 11/95	6K0820413B	**816908**	550 350	AL
1.6 i	E	1595	1F		11/93 ▸ 06/96	6K0820413B	**816908**	550 350	AL
1.6 i	E	1598	AFT, ABU		11/93 ▸ 06/96	6K0820413B	**816908**	550 350	AL
1.8 i, 1.8 i 16V	E	1781	ADL, ABS, ACC, ADZ		11/93 ▸ 06/96	6K0820413B	**816908**	550 350	AL
2.0 i	E	1984	AGG, 2E		11/93 ▸ 06/96	6K0820413B	**816908**	550 350	AL
1.9 D, 1.9 SDi, 1.9 TD	D	1896	AAZ, 1Y, AEY		11/93 ▸ 06/96	6K0820413B	**816908**	550 350	AL

CORDOBA (96>99)

1.0 i	E	999	AER		06/97 ▸ 04/99	6K0820413B	**816908**	550 350	AL
1.4 i, 1.4 i 16V	E	1390	AEX, AFH, AKV, ANX, APQ		07/96 ▸ 05/99	6K0820413B	**816908**	550 350	AL
1.6 i	E	1595	1F		07/96 ▸ 05/99	6K0820413B	**816908**	550 350	AL
1.6 i	E	1598	AFT, AEE, ALM		07/96 ▸ 05/99	6K0820413B	**816908**	550 350	AL
1.8 i	E	1781	ACC, ADZ		07/96 ▸ 05/99	6K0820413B	**816908**	550 350	AL
2.0 i, 2.0 i 16V	E	1984	AGG, ABF		07/96 ▸ 04/99	6K0820413B	**816908**	550 350	AL
1.9 D, 1.9 SDi, 1.9 TD, 1.9 TDi	D	1896	AHU, 1Y/Z, AAZ, AEY, AFN		07/96 ▸ 05/99	6K0820413B	**816908**	550 350	AL

CORDOBA (99>2002)

1.0 i, 1.0 i 16V ▸ 6K-1-242 000	E	999	ALD, ANV, AST, AUC, AVZ		08/99 ▸ 08/02	6K0820411	**817245**	588 361	AL
1.4 i, 1.4 i 16V ▸ 6K-1-242 000	E	1390	AUB, AKK, ANW, APE, AQQ AUD		05/99 ▸ 08/02	6K0820411	**817245**	588 361	AL
1.6 i 6K-1-242 001 ▸	E	1595	AEH, AKL, APF, AUR		05/99 ▸ 08/02	6K0820411A	**817245**	588 361	AL
1.6 i 6K-1-242 001 ▸	E	1598	ALM		05/99 ▸ 08/02	6K0820411A	**817245**	588 361	AL
1.8 i Turbo 20V ▸ 6K-1-242 000	E	1781	AQX		12/99 ▸ 08/02	6K0820411	**817245**	588 361	AL
1.9 SDi, 1.9 TDi ▸ 6K-1-242 000	D	1896	ALH, AGP, AGR, AQM, ASV		03/99 ▸ 08/02	6K0820411	**817245**	588 361	AL

CORDOBA (2002>)

1.2 i 12V	E	1198	AZQ	R134	10/02 ▸ 04/04	6Q0820411K	**817686**	468 361	AL
1.4 i 16V	E	1390	BBY, BBZ, BKY	R134	09/02 ▸	6Q0820411K	**817686**	468 361	AL
1.6 i	E	1598	BAH	R134	04/03 ▸	6Q0820411K	**817686**	468 361	AL
2.0 i	E	1984	AZL, BBX	R134	09/02 ▸	6Q0820411K	**817686**	468 361	AL
1.4 TDi	D	1422	AMF	R134	10/02 ▸	6Q0820411K	**817686**	468 361	AL
1.9 SDi, 1.9 TDi	D	1896	ASZ, ASY, ATD	R134	09/02 ▸	6Q0820411K	**817686**	468 361	AL

IBIZA (93>99)

1.05, 1.05 i	E	1043	AAU		02/93 ▸ 06/96	6K0820413B	**816908**	550 350	AL
1.3 i	E	1272	AAV, 2G		02/93 ▸ 07/94	6K0820413B	**816908**	550 350	AL
1.4 i, 1.4 i 16V	E	1390	AEX, AFH, AKV, ANX, APQ		07/95 ▸ 01/99	6K0820413B	**816908**	550 350	AL
1.4 i	E	1391	ABD		09/93 ▸ 06/96	6K0820413B	**816908**	550 350	AL
1.6 i	E	1595	1F		07/94 ▸ 01/99	6K0820413B	**816908**	550 350	AL
1.6 i	E	1598	AFT, ABU, AEE, ALM		09/93 ▸ 01/99	6K0820413B	**816908**	550 350	AL
1.8 i	E	1781	ADZ, ABS, ACC, ADL		02/93 ▸ 01/99	6K0820413B	**816908**	550 350	AL
2.0 i, 2.0 i 16V	E	1984	AGG, 2E, ABF		02/93 ▸ 01/99	6K0820413B	**816908**	550 350	AL
1.9 D, 1.9 SDI, 1.9 TD, 1.9 TDi	D	1896	1Y/Z, AAZ, AEY, AFN, AHU		02/93 ▸ 01/99	6K0820413B	**816908**	550 350	AL

IBIZA (99>2001)

1.0 i, 1.0 i 16V	E	999	ALD, ANV, AST, AUC, AVZ		08/99 ▸ 11/01	6K0820411A	**817245**	588 361	AL
1.4 i, 1.4 i 16V	E	1390	AKK, ANW, APE, AQQ, AUA AUB, AUD		08/99 ▸ 11/01	6K0820411	**817245**	588 361	AL
1.6 i	E	1595	AEH, AKL, APF, AUR		06/99 ▸ 11/01	6K0820411	**817245**	588 361	AL
1.6 i	E	1598	ALM		08/99 ▸ 11/01	6K0820411	**817245**	588 361	AL
1.8 i Turbo 20V	E	1781	AQX, AYP		12/99 ▸ 11/01	6K0820411A	**817245**	588 361	AL
1.9 SDi, 1.9 TDi	D	1896	ALH, AGP, AGR, AQM, ASV		03/99 ▸ 11/01	6K0820411A	**817245**	588 361	AL

IBIZA (2001>)

1.2 i 12V ▸ 6L-3-044 431	E	1198	AZQ	R134	11/01 ▸	6Q0820411J	**817686**	468 361	AL

• **New** Nouveau **Neu** Nuevo **Novo** Nuovo **Nieuw** Nowi **Новый** Novy **Nou** Yeni **Νέους**

⏭ **Multi-product Crosslist on section 1** Cross List Multi-produits, Section 1
Crossliste siehe Kapitel 1 Crosslist Multiproducto en la sección 1
Lista Multi-produto na secção 1 Cross-list Multi prodotto nella sezione 1
Rubriek 1 : Cross list "alle produkten" Kombinovaný převodník v sekci 1
Crosslist multi-produse, secţie 1 **Çoklu ürün çapraz listesi bölüm 1 tedir**
Αντιστοιχίες προϊόντων στο κεφάλαιο 1

		cc				OE	Valeo	DIM	TECH
SEAT (.../...)									
IBIZA (2001>) (.../...)									
1.4 i 16V ▸6L-3-044 431	E	1390	BBZ, AUB, BBY, BKY	R134	09/01 ▸	6Q0820411J	**817686**	468 361	AL
1.6 i	E	1598	BAH	R134	04/03 ▸	6Q0820411J	**817686**	468 361	AL
1.8 i 16V, 1.8 i Turbo 20V	E	1781	BJX, BBU	R134	12/03 ▸	6Q0820411J	**817686**	468 361	AL
2.0 i	E	1984	AZL, BBX	R134	07/02 ▸	6Q0820411J	**817686**	468 361	AL
1.4 TDi 6L-3-044 432 ▸	D	1422	AMF	R134	05/02 ▸	6Q0820411J	**817686**	468 361	AL
1.9 SDi, 1.9 TDi ▸6L-3-044 431	D	1896	ATD, ASY, ASZ, BPX	R134	09/01 ▸	6Q0820411J	**817686**	468 361	AL
IBIZA (2008>)									
1.2 i 12V	E	1198	BZG		03/08 ▸ 05/10	6R0820411D	•**814364**		AL
1.4 i 16V	E	1390	BXW		03/08 ▸	6R0820411D	•**814364**		AL
1.6 i 16V	E	1598	BTS		05/08 ▸ 03/12	6R0820411D	•**814364**		AL
1.4 TDI	D	1422	BMS/F		07/08 ▸ 06/10	6R0820411D	•**814364**		AL
1.9 TDI	D	1896	BLS/F,BXJ/F		03/08 ▸ 06/10	6R0820411D	•**814364**		AL
LEON (98>2005)									
1.4 i 16V	E	1390	APE, AHW, AXP, BCA		11/99 ▸	1J0820413N	**817244**	548 361	AL
1.6 i, 1.6 i 16V	E	1595	AUS, AEH, AKL, AZD, BCB		11/99 ▸	1J0820413N	**817244**	548 361	AL
1.8 i 20V, 1.8 i Turbo 20V	E	1781	APG, AGN, AJQ, AMK, APP ARY, AUQ, BAM		11/99 ▸	1J0820413N	**817244**	548 361	AL
2.8 i V6 24V	E	2792	AUE, BDE		10/00 ▸	1J0820413N	**817244**	548 361	AL
1.9 SDi, 1.9 TDi	D	1896	ASV, AGR, AHF, ALH, AQM ASZ		11/99 ▸	1J0820413N	**817244**	548 361	AL
LEON (99>2005)									
1.9 TDi	D	1896	ARL	R134	09/00 ▸ 10/05	1J0820413H	•**814357**	540 353	AL
LEON II									
1.4 i 16V 1P-7-003 801 ▸	E	1390	BXW	R134	06/06 ▸	1K0820411P	**817777**	584 401	AL
1.6 i	E	1595	BGU, BSE, BSF	R134	07/05 ▸	1K0820411H	**817777**	584 401	AL
2.0 FSi, 2.0 TFSi 16V	E	1984	BVZ, BLR, BLY, BVY, BWA	R134	07/05 ▸	1K0820411H	**817777**	584 401	AL
1.9 TDi	D	1896	BKC, BLS	R134	07/05 ▸	1K0820411H	**817777**	584 401	AL
2.0 TDi 16V	D	1968	BKD, AZV, BMM	R134	07/05 ▸	1K0820411H	**817777**	584 401	AL
TOLEDO (98>2004)									
1.4 i 16V	E	1390	AHW, AXP		01/00 ▸ 05/02	1J0820413N	**817244**	548 361	AL
1.6 i, 1.6 i 16V	E	1595	AEH, AKL, AUS, AZD, BCB		10/98 ▸ 07/04	1J0820413N	**817244**	548 361	AL
1.8 i 20V	E	1781	APG, AGN, AUQ		10/98 ▸ 07/04	1J0820413N	**817244**	548 361	AL
2.3 i VR5 20V	E	2324	AQN, AGZ		10/98 ▸ 11/03	1J0820413N	**817244**	548 361	AL
1.9 TDi	D	1896	ALH, AGR, AHF, ASV, ASZ		10/98 ▸ 07/04	1J0820413N	**817244**	548 361	AL
1.9 TDi	D	1896	ARL	R134	10/00 ▸ 07/04	1J0820413H	•**814357**	540 353	AL
TOLEDO (2004>)									
1.4 FSi, 1.4 iSRE	E	1390	BXW, CAX	R134	05/06 ▸ 01/08	1K0820411P	**817777**	584 401	AL
1.6 i	E	1595	BGU, BSE, BSF	R134	09/04 ▸	1K0820411H	**817777**	584 401	AL
1.8 FSi 16V	E	1798	BYT, BZB	R134	11/05 ▸ 01/08	1K0820411P	**817777**	584 401	AL
2.0 FSi 16V, 2.0 i 16V	E	1984	BLR, BLY, BVY, BVZ, BWA	R134	09/04 ▸	1K0820411H	**817777**	584 401	AL
1.9 TDi	D	1896	BLS, BJB, BKC, BXE	R134	09/04 ▸	1K0820411H	**817777**	584 401	AL
2.0 TDi 16V	D	1968	BMM, AZV, BKD, BMN	R134	09/04 ▸	1K0820411H	**817777**	584 401	AL
SEAT									
INCA									
1.4 i, 1.4 i 16V	E	1390	AUA, AEX, AKV, APQ, AUD		11/95 ▸ 06/03	6K0820413B	**816908**	550 350	AL
1.6 i	E	1595	1F		11/95 ▸ 05/97	6K0820413B	**816908**	550 350	AL
1.6 i	E	1598	AEE		06/97 ▸ 09/00	6K0820413B	**816908**	550 350	AL

Valeo recommends replacing the receiver drier with the condenser
Pensez à changer la bouteille déshydratante avec le condenseur
Denken Sie daran, beim Wechsel des Kondensators auch den Trockner zu erneuern
Piense en la sustitución del filtro deshidratante con el condensador
A Valeo recomenda substituir o filtro desidratante com o condensador
Ricordatevi di sostituire il filtro disidratatore insieme al condensatore
Bij de vervanging van de condensor, vervang tevens de filter-droger

Valeo zaleca wymianę filtra osuszacza wraz ze skraplaczem
Рекомендируем замену осушителя вместо с конденсором
Spolu s kondenzátorem je nutné vyměnit také vysoušeč
Nu uitați sa schimbați uscatorul cu condensatorul
Kondenser değişimlerinde nem alıcının da değiştirilmesi gerektiğini dikkate alınız
Πρέπει να αντικαταστήσετε το φίλτρο υγρού μαζί με το συμπυκνωτή

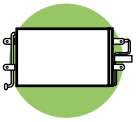

		CC				OE	Valeo	DIM	TECH
SEAT (.../...)									
INCA (.../...)									
1.7 SDi	D	1714	AHB		09/96 ▸ 09/00	6K0820413B	**816908**	550 350	AL
1.9 D, 1.9 SDi	D	1896	AEY, 1Y, AYQ		11/95 ▸ 06/03	6K0820413B	**816908**	550 350	AL
SKODA									
FABIA									
1.0 i ▸ 6Y-4-875 195	E	997	AQV, ARV	+R134	01/01 ▸	6Q0820411J	**817686**	468 361	AL
1.2 i ▸ 6Y-4-875 195	E	1198	AWY, AZQ, BMD, BME	+R134	08/02 ▸	6Q0820411E	**817686**	468 361	AL
1.4 i 16V ▸ 6Y-4-875 196 ▸	E	1390	AUA, AUB, BBY, BBZ, BKY	+R134	10/99 ▸	6Q0820411K	**817686**	468 361	AL
1.4 i ▸ 6Y-3-628 129 ▸	E	1397	AME, AQW, ATZ, AZE, AZF	+R134	08/99 ▸	6Q0820411H	**817686**	468 361	AL
2.0 i ▸ 6Y-3-628 129 ▸	E	1984	AZL	+R134	07/00 ▸	6Q0820411K	**817686**	468 361	AL
1.4 TDi	D	1422	AMF,BNM,BNV,BMS	+R134	08/02 ▸	6Q0820411K	**817686**	468 361	AL
1.9 SDi, 1.9 TDi ▸ 6Y-4-875 196 ▸	D	1896	ASY, ASZ, ATD	+R134	09/00 ▸	6Q0820411H	**817686**	468 361	AL
FABIA II									
1.6 i 16V	E	1598	BTS-E4	+R134	04/07 ▸	6Q0820411K	**817686**	468 361	AL
OCTAVIA (96>2000)									
1.4 i	E	1390	AMD		02/99 ▸ 07/00	1J0820413N	**817244**	548 361	AL
1.6 i	E	1595	AEH, AKL		02/97 ▸ 07/00	1J0820413N	**817244**	548 361	AL
1.6 i	E	1598	AEE		10/96 ▸ 07/00	1J0820413N	**817244**	548 361	AL
1.8 i 20V, 1.8 i Turbo 20V	E	1781	AGN, AGU, ARZ		10/96 ▸ 07/00	1J0820413N	**817244**	548 361	AL
2.0 i	E	1984	AZH, APK, AQY, ATF		05/99 ▸ 07/00	1J0820413N	**817244**	548 361	AL
1.9 SDi, 1.9 TDi	D	1896	AGP, AGR, AHF, ASV		10/96 ▸ 07/00	1J0820413N	**817244**	548 361	AL
OCTAVIA (2000>2004)									
1.4 i, 1.4 i 16V	E	1390	AMD, AXP, BCA		08/00 ▸	1J0820413N	**817244**	548 361	AL
1.6 i	E	1595	AKL, AEH, AVU, BFQ		08/00 ▸	1J0820413N	**817244**	548 361	AL
1.6 i	E	1598	AEE		08/00 ▸ 09/04	1J0820413N	**817244**	548 361	AL
1.8, 1.8 i Turbo 20V	E	1781	ARX, AGU, ARZ, AUM, AUQ		08/00 ▸ 09/04	1J0820413N	**817244**	548 361	AL
2.0 i	E	1984	AZJ, AEG, APK, AQY, AZH		08/00 ▸ 09/04	1J0820413N	**817244**	548 361	AL
1.9 D, 1.9 TDi	D	1896	ASV, AGR, AHF, ALH, AQM ASZ, ATD		08/00 ▸	1J0820413N	**817244**	548 361	AL
OCTAVIA (2004>)									
1.4 i	E	1390	BCA	+R134	05/04 ▸	1K0820411E	**817777**	584 401	AL
1.6 i	E	1595	BGU, BSE, BSF	+R134	05/04 ▸	1K0820411E	**817777**	584 401	AL
1.6 FSi	E	1598	BLF	+R134	05/04 ▸	1K0820411E	**817777**	584 401	AL
2.0 FSi, 2.0 TFSi 16V	E	1984	BLR, BLX, BLY, BVX, BVY BVZ, BWA	+R134	11/04 ▸	1K0820411E	**817777**	584 401	AL
1.9 TDi	D	1896	BJB, BKC, BLS	+R134	05/04 ▸	1K0820411E	**817777**	584 401	AL
2.0 TDi	D	1968	BKD, AZV, BMM	+R134	05/04 ▸	1K0820411E	**817777**	584 401	AL
ROOMSTER									
1.2 i 12V	E	1198	BME-E4,BZG	+R134	05/06 ▸	6Q0820411K	**817686**	468 361	AL
1.4 i 16V	E	1390	BXW-E2, BXW-E4	+R134	05/06 ▸	6Q0820411K	**817686**	468 361	AL
1.6 16V	E	1598	BTS-E2, BTS-E4	+R134	05/06 ▸	6Q0820411K	**817686**	468 361	AL
1.4 TDi	D	1422	BNV, BNM,BMS	+R134	05/06 ▸	6Q0820411K	**817686**	468 361	AL
1.9 TDi	D	1896	AXR,BLS, BSW	+R134	03/06 ▸	6Q0820411K	**817686**	468 361	AL
SUPERB									
1.8 i Turbo 20V	E	1781	AWT		12/01 ▸	3B0260401	**817679**	618 421	AL
2.0 i	E	1984	AZM		12/01 ▸	3B0260401	**817679**	618 421	AL

• **New** Nouveau **Neu** Nuevo **Novo** Nuovo **Nieuw** Nowi **Новый** Novy **Nou** Yeni **Νέους**

⏭ **Multi-product Crosslist on section 1** Cross List Multi-produits, Section 1
Crossliste siehe Kapitel 1 Crosslist Multiproducto en la sección 1
Lista Multi-produto na secção 1 Cross-list Multi prodotto nella sezione 1
Rubriek 1 : Cross list "alle produkten" Kombinovaný převodník v sekci 1
Crosslist multi-produse, secţie 1 **Çoklu ürün çapraz listesi bölüm 1 tedir**
Αντιστοιχίες προϊόντων στο κεφάλαιο 1

		CC				OE	Valeo	DIM	TECH
SKODA (.../...)									
SUPERB (.../...)									
2.8 i V6 30V	E	2771	AMX,BBG		12/01 ▸	3B0260401	**817679**	618 421	AL
1.9 TDi	D	1896	AWX, AVB, AVF		12/01 ▸	3B0260401	**817679**	618 421	AL
2.5 TDi V6 24V	D	2496	AYM,BDG		12/01 ▸	3B0260401	**817679**	618 421	AL
SMART									
FOR TWO									
0.6 i	E	599	MCC01, MCC01D3, MCC02 MCC02D3	+/ R134	10/98 ▸	0001632V003	**817801**	380 330	AL
0.7 i	E	698	M160/1, 160921	+/ R134	02/03 ▸	0001632V003	**817801**	380 330	AL
0.8 CDI	D	799	660.940	+/ R134	09/99 ▸	0001632V003	**817801**	380 330	AL
SUBARU									
FORESTER (97>2002)									
2.0 i CAD ▸	E	1994	EJ20J		07/97 ▸ 06/98	73210FC000	**814306**	695 328	AL
2.0 i,2.0 i 16V,2.0 i Turbo	E	1994	EJ202,EJ205,EJ20J		07/97 ▸ 12/99	73210FC030	**814268**	693 348	AL
2.0 i 16V,2.0 i Turbo	E	1994	EJ202,EJ205		01/00 ▸ 09/02	73210FC050	**814311**	698 368	AL
FORESTER (2002>)									
2.0 i 16V	E	1994	EJ20, EJ20E, EJ205-E2	+/ R134	09/02 ▸ 09/06	73210SA011	**814312**	649 358	AL
2.5 i 16V	E	2457	EJ25, EJ25T	+/ R134	09/02 ▸ 09/06	73210SA011	**814312**	649 358	AL
LEGACY (94>97)									
1.8 i	E	1820	EJ18EN,EJ18JN		07/95 ▸ 11/98	73210AC021	**814259**	698 298	AL
2.0 i	E	1994	EJ20EN,EJ20ER		01/94 ▸ 11/98	73210AC021	**814259**	698 298	AL
2.2 i	E	2212	EJ22EN,EJ22ER		01/94 ▸ 06/97	73210AC021	**814259**	698 298	AL
2.5 i 16V	E	2457	EJ25D		02/97 ▸ 11/98	73210AC050	**818101**	702 308	AL
LEGACY (98>2002)									
2.0 i 16V	E	1994	EJ201	+/ R134	10/98 ▸ 04/03	73210AG000	**814314**	606 293	AL
2.5 i 16V	E	2457	EJ251	+/ R134	10/98 ▸ 04/03	73210AG000	**814314**	606 293	AL
3.0 i 24V	E	2999	EZ30-209	+/ R134	10/00 ▸ 04/03	73210AG000	**814314**	606 293	AL
LEGACY (2003>)									
2.0 i 16V	E	1994	EJ202,EJ204,EJ20E	+/ R134	05/03 ▸	73210AG000	**814314**	606 293	AL
2.5 i 16V	E	2457	EJ25-165	+/ R134	05/03 ▸	73210AG000	**814314**	606 293	AL
3.0 i 24V	E	2999	EZ30-245	+/ R134	05/03 ▸	73210AG000	**814314**	606 293	AL
SUZUKI									
BALENO									
1.5 i 16V	E	1493	G15A		04/95 ▸ 2002	9531060G41	**814305**	563 278	AL
1.6 i 16V	E	1590	G16B		04/95 ▸ 2002	9531060G41	**814305**	563 278	AL
LIANA									
1.3 i 16V	E	1328	M13A	+/ R134	06/01 ▸ 01/06	9531054G01	•**814330**	636 302	AL
1.6 i 16V	E	1586	M16A	+/ R134	06/01 ▸ 04/04	9531054G01	•**814330**	636 302	AL
SPLASH									
1.2 i 16V	E	1242	K12B	+/ R134	03/08 ▸	9531051K00	**814219**	542 346	AL
1.0 i 12V	E	997	K10B	+/ R134	03/08 ▸	9531051K00	**814219**	542 346	AL
SWIFT (2005>)									
1.3 DDiS 16V	D	1248	D13A	R134	04/05 ▸ 01/11	9531060EM1	•**814327**	527 272	AL
1.3 i 16V	E	1328	M13AVVT	+/ R134 / JAP	04/05 ▸	9531063J00	**814237**	534 322	AL
1.3 i 16V	E	1328	M13AVVT	R134	04/05 ▸ 01/11	9531060EM1	•**814327**	527 272	AL
1.5 i 16V	E	1490	M15	+/ R134 / JAP	04/05 ▸	9531063J00	**814237**	534 322	AL

Valeo recommends replacing the receiver drier with the condenser
Pensez à changer la bouteille déshydratante avec le condenseur
Denken Sie daran, beim Wechsel des Kondensators auch den Trockner zu erneuern
Piense en la sustitución del filtro deshidratante con el condensador
A Valeo recomenda substituir o filtro desidratante com o condensador
Ricordatevi di sostituire il filtro disidratatore insieme al condensatore
Bij de vervanging van de condensor, vervang tevens de filter-droger
Valeo zaleca wymianę filtra osuszacza wraz ze skraplaczem
Рекомендируем замену осушителя вместо с конденсором
Spolu s kondenzátorem je nutné vyměnit také vysoušeč
Nu uitați sa schimbați uscatorul cu condensatorul
Kondenser değişimlerinde nem alıcının da değiştirilmesi gerektiğini dikkate alınız
Πρέπει να αντικαταστήσετε το φίλτρο υγρού μαζί με το συμπυκνωτή

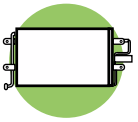

		CC				OE	Valeo	DIM	TECH
SUZUKI									
SWIFT (2005>) (.../...)									
1.5 i 16V	E	1490	M15	R134	04/05 ▸ 09/10	9531060EM1	•**814327**	527 272	AL
1.6 i 16V	E	1586	M16A	R134 / JAP	04/06 ▸	9531063J00	**814237**	534 322	AL
1.6 i 16V	E	1586	M16A	R134/	04/06 ▸ 09/11	9531060EM1	•**814327**	527 272	AL
VITARA									
1.6,1.6 i 16V,1.6 i 8V	E	1590	G16AC,G16AI,G16B		10/88 ▸ 03/98	9531067A50	**814244**	446 353	AL
GRAND VITARA (98>2005)									
1.6 i 16V	E	1590	G16B	R134	05/98 ▸ 02/05	9531064J00	**814228**	668 423	AL
2.0 i 16V	E	1995	J20A	R134	05/98 ▸ 02/05	9531064J00	**814228**	668 423	AL
GRAND VITARA (2006>)									
1.6 VVT 16V	E	1586	M16A	R134	03/06 ▸	9531064J00	**814228**	668 423	AL
2.0 VVT 16V	E	1995	J20A	R134	03/06 ▸	9531064J00	**814228**	668 423	AL
1.9 DDiS	D	1870	F9Q	R134	03/06 ▸	9531064J00	**814228**	668 423	AL
TOYOTA									
AURIS (JPP150) (2006>)									
1.3 VVT-i 100 16V	E	1329	1NRFE-HTWC	R134	09/08 ▸ 10/09	8845012280	**814234**	626 370	AL
AURIS (2006>)									
1.4 VVT-i 97 16V	E	1398	4ZZFE-HTWC	R134	10/06 ▸ 12/08	8845012280	**814234**	626 370	AL
1.6 VVT-i 124 16V **1.6 VVT-i 132 16V**	E	1598	1ZRFAE-HTWVM,1ZRFE-HTWC	R134	10/06 ▸	8845012280	**814234**	626 370	AL
1.8 VVT-i 147 16V	E	1798	2ZRFAE-HTWVM	R134	12/08 ▸ 10/09	8845012280	**814234**	626 370	AL
2.0 D-4D	D	1998	1ADFTV-DCR,1ADFTV-DCRL/F	R134	10/06 ▸ 01/09	8845012290	**814205**	696 346	AL
AURIS (2007>2010)									
1.4 D-4D	D	1364	1NDTV-DCR	R134	02/07 ▸ 01/10	8845012280	**814234**	626 370	AL
1.4 VVT-i 16V	E	1398	4ZZFE-HTWC	R134	02/07 ▸ 11/08	8845012280	**814234**	626 370	AL
1.6 VVT-i 16V	E	1598	1ZRFE-HTWC	R134	02/07 ▸ 02/09	8845012280	**814234**	626 370	AL
2.0 D-4D	D	1998	1ADFTV-DCR,1ADFTV-DCRL/F	R134	02/07 ▸ 01/10	8845012290	**814205**	696 346	AL
2.2 D-4D	D	2231	2ADFHV-DCRL	R134	02/07 ▸ 01/10	8845012290	**814205**	696 346	AL
AVENSIS (97>2000)									
1.6 i 16V	E	1587	4A-FEC	R134	10/97 ▸ 06/00	8845005010	**817802**	574 308	AL
1.6 i 16V	E	1587	4A-FEC	R134	10/97 ▸ 06/00	8845005020	**817803**	574 308	AL
1.8 i 16V	E	1762	7A-FE	R134	10/97 ▸ 06/00	8845005010	**817802**	574 308	AL
1.8 i 16V	E	1762	7A-FE	R134	10/97 ▸ 06/00	8845005020	**817803**	574 308	AL
2.0 i 16V	E	1998	3S-FE	R134	10/97 ▸ 06/00	8845005020	**817803**	574 308	AL
2.0 i 16V	E	1998	3S-FE	R134	10/97 ▸ 06/00	8845005010	**817802**	574 308	AL
2.0 TD	D	1974	2C-T,2C-TE	R134	10/97 ▸ 06/00	8845005010	**817802**	574 308	AL
2.0 TD	D	1974	2C-TE	R134	10/97 ▸ 06/00	8845005020	**817803**	574 308	AL
2.0 D-4D 16V	D	1995	1CDFTV-HDCR	R134	08/99 ▸ 06/00	8845005010	**817802**	574 308	AL
2.0 D-4D 16V	D	1995	1CDFTV-HDCR	R134	08/99 ▸ 06/00	8845005020	**817803**	574 308	AL
AVENSIS (2000>2003)									
1.6 VVTi 16V	E	1598	3ZZ-FE	R134	07/00 ▸ 01/03	8845005070	**817802**	574 308	AL
1.8 i 16V	E	1794	1ZZ-FE	R134	07/00 ▸ 01/03	8845005070	**817802**	574 308	AL
2.0 D4 16V,2.0 i 16V	E	1998	1AZ-FSE,3S-FE	R134	07/00 ▸ 01/03	8845005070	**817802**	574 308	AL
2.0 D-4D 16V	D	1995	1CDFTV-HDCR	R134	07/00 ▸ 01/03	8845005070	**817802**	574 308	AL
AVENSIS (2003>2008)									
1.6 VVTi 16V	E	1598	3ZZ-FE	R134	01/03 ▸ 11/08	8845005100	**814208**	646 390	AL
1.8 VVTi 16V	E	1794	1ZZ-FE	R134	01/03 ▸ 11/08	8845005100	**814208**	646 390	AL
2.0 D-4 16V,2.0 VVTi 16V	E	1998	1AZ-FE,1AZ-FSE	R134	01/03 ▸ 11/08	8845005120	**814209**	646 384	AL
2.4 VVTi 16V	E	2362	2AZ-FSE	R134	04/06 ▸ 11/08	8845005170	**814213**	646 390	AL

• **New** Nouveau **Neu** Nuevo **Novo** Nuovo **Nieuw** Nowi **Новый** Novy **Nou** Yeni **Νέους**

⏭ **Multi-product Crosslist on section 1** Cross List Multi-produits, Section 1
Crossliste siehe Kapitel 1 Crosslist Multiproducto en la sección 1
Lista Multi-produto na secção 1 Cross-list Multi prodotto nella sezione 1
Rubriek 1 : Cross list "alle produkten" Kombinovaný převodník v sekci 1
Crosslist multi-produse, secţie 1 **Çoklu ürün çapraz listesi bölüm 1 tedir**
Αντιστοιχίες προϊόντων στο κεφάλαιο 1

		CC				OE	Valeo	DIM	TECH
TOYOTA (.../...)									
AVENSIS (2003>2008) (.../...)									
2.0 D-4D 16V	D	1995	1CDFTV-DCRL	+/ R134	05/03 ▸ 04/06	8845005170	**814213**	646 390	AL
2.0 D-4D 16V	D	1995	1CDFTV-DCRL	+/ R134	03/03 ▸ 04/06	8845005140	**814271**	593 360	AL
2.0 D-4D 16V	D	1998	1ADFTV-DCR	+/ R134	05/06 ▸ 11/08	8845005170	**814213**	646 390	AL
2.2 D-4D 16V	D	2231	2AD-FTV,2ADFHV-DCRL	+/ R134	04/05 ▸ 11/08	8845005170	**814213**	646 390	AL
2.4 VVTi 16V	E	2362	2AZ-FSE	+/ R134	09/03 ▸ 11/08	8845005120	**814209**	646 384	AL
AVENSIS VERSO (2001>2005)									
2.0 D-4D 16V	D	1995	1CDFTV-DCRL	+/ R134	05/01 ▸ 07/05	8846044520	**814207**	750 398	AL
2.0 VVTi 16V	E	1998	1AZ-FE	+/ R134	05/01 ▸ 07/05	8846044520	**814207**	750 398	AL
AYGO									
1.0 VVT-i	E	998	1KR-FE	+/ R134	07/05 ▸	884500H020	**818013**	359 351	AL
1.4 D	D	1398	2WZTV	+/ R134	07/05 ▸	884500H010	**818014**	359 351	AL
CAMRY (86>91)									
1.8	E	1832	1S-L		10/86 ▸ 08/88	8846032090	**814279**	642 310	AL
2.0 i	E	1996	3S-FE		10/86 ▸ 06/91	8846032090	**814279**	642 310	AL
2.0 i 16V	E	1998	3S-FE		10/86 ▸ 06/91	8846032090	**814279**	642 310	AL
2.5 i V6	E	2507	2VZ-FE		02/88 ▸ 06/91	8846032090	**814279**	642 310	AL
2.0 TD	D	1974	2C-TL		10/86 ▸ 06/91	8846032090	**814279**	642 310	AL
CAMRY (91>96)									
2.2 i 16V	E	2164	5S-FE		06/91 ▸ 09/93	8846033010	**814282**	687 404	AL
3.0 i V6	E	2959	3VZ-FE		06/91 ▸ 09/93	8846033010	**814282**	687 404	AL
CAMRY (96>2001)									
2.2 i 16V	E	2164	5S-FE		08/96 ▸ 05/97	8846006060	**814283**	725 404	AL
2.2 i 16V	E	2164	5S-FE		08/96 ▸ 07/01	8846006061	**814247**	725 404	AL
3.0 i V6 24V	E	2995	1MZ-FE		08/96 ▸ 05/97	8846006060	**814283**	725 404	AL
3.0 i V6 24V	E	2995	1MZ-FE		08/96 ▸ 07/01	8846006061	**814247**	725 404	AL
CARINA E (92>97)									
1.6 i 16V	E	1587	4A-FE		12/92 ▸ 12/97	8846005010	**814246**	690 336	AL
1.6 i 16V	E	1587	4A-FE	+/ R134	12/92 ▸ 12/97	8845005010	**817802**	574 308	AL
1.8 i 16V	E	1762	7A-FE		12/94 ▸ 10/97	8846005010	**814246**	690 336	AL
1.8 i 16V	E	1762	7A-FE	+/ R134	12/94 ▸ 10/97	8845005010	**817802**	574 308	AL
2.0 i 16V	E	1998	3S-FE,3S-GE		02/92 ▸ 10/97	8846005010	**814246**	690 336	AL
2.0 i 16V	E	1998	3S-FE,3S-GE	+/ R134	02/92 ▸ 10/97	8845005010	**817802**	574 308	AL
2.0 D,2.0 TD	D	1974	2C,2C-T	+/ R134	10/94 ▸ 10/97	8845005020	**817803**	574 308	AL
CELICA (93>99)									
1.8 i 16V	E	1762	7A-FE		11/93 ▸ 07/99	8846020470	**818104**	594 328	AL
2.0 i,2.0 i Turbo	E	1998	3S-GE1,3S-GTE		11/93 ▸ 07/99	8846020470	**818104**	594 328	AL
COROLLA (100) (92>97)									
1.3 i	E	1332	4E-FE		09/95 ▸ 04/97	8846012460	**814248**	685 336	AL
1.6 i	E	1587	4A-FE		11/92 ▸ 05/95	8846012460	**814248**	685 336	AL
1.8 GT	E	1762	7A-FE		11/92 ▸ 05/95	8846012460	**814248**	685 336	AL
COROLLA (110) (97>99)									
1.3 i 12V	E	1296	2E		04/97 ▸ 09/99	8846012480	**818107**	682 311	AL
1.3 i 16V	E	1332	4E-FE		04/97 ▸ 11/99	8846012480	**818107**	682 311	AL
1.6 i 16V	E	1587	4A-FE		04/97 ▸ 11/99	8846012480	**818107**	682 311	AL
1.8 i 16V	E	1762	7A-FE		04/97 ▸ 09/99	8846012480	**818107**	682 311	AL
2.0 D	D	1974	2C-E		04/97 ▸ 09/99	8846012480	**818107**	682 311	AL
2.0 D	D	1975	2C-E		04/97 ▸ 02/00	8846002050	**814298**	687 319	AL
COROLLA (110) (99>2001)									
1.3 i 12V	E	1296	2E		10/99 ▸ 07/01	8846012480	**818107**	682 311	AL

Valeo recommends replacing the receiver drier with the condenser
Pensez à changer la bouteille déshydratante avec le condenseur
Denken Sie daran, beim Wechsel des Kondensators auch den Trockner zu erneuern
Piense en la sustitución del filtro deshidratante con el condensador
A Valeo recomenda substituir o filtro desidratante com o condensador
Ricordatevi di sostituire il filtro disidratatore insieme al condensatore
Bij de vervanging van de condensor, vervang tevens de filter-droger

Valeo zaleca wymianę filtra osuszacza wraz ze skraplaczem
Рекомендируем замену осушителя вместо с конденсором
Spolu s kondenzátorem je nutné vyměnit také vysoušeč
Nu uitați sa schimbați uscatorul cu condensatorul
Kondenser değişimlerinde nem alıcının da değiştirilmesi gerektiğini dikkate alınız
Πρέπει να αντικαταστήσετε το φίλτρο υγρού μαζί με το συμπυκνωτή

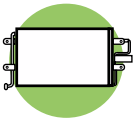

	CC				OE	Valeo	DIM	TECH

TOYOTA (.../...)

COROLLA (110) (99>2001) (.../...)

1.4 i 16V	E	1398	4ZZ-FE		10/99 ▸ 10/01	8846012480	**818107**	682 311	AL
1.6 VVTi 16V	E	1598	3ZZ-FE		10/99 ▸ 10/01	8846012480	**818107**	682 311	AL
1.8 i 16V	E	1762	7A-FE		10/99 ▸ 10/01	8846012480	**818107**	682 311	AL
1.9 D	D	1868	1WZ		12/99 ▸ 10/01	8846012480	**818107**	682 311	AL
2.0 D-4D 16V	D	1995	1CDFTV-DCR		08/00 ▸ 10/01	8846012480	**818107**	682 311	AL

COROLLA (120) (2001>)

1.4 i 16V	E	1398	4ZZ-FE	+/ R134	01/02 ▸ 09/02	8846012540	**814238**	653 363	AL
1.4 i 16V	E	1398	4ZZ-FE	+/ R134	10/01 ▸ 02/07	8845013031	**817805**	609 368	AL
1.6 VVT-i 16V	E	1598	3ZZ-FE	+/ R134	10/01 ▸ 02/07	8845013031	**817805**	609 368	AL
1.6 VVT-i 16V	E	1598	3ZZ-FE	+/ R134	10/01 ▸ 09/02	8846012540	**814238**	653 363	AL
1.8 i 16V	E	1796	2ZZ-GE	+/ R134	11/01 ▸ 02/07	8845013031	**817805**	609 368	AL
1.8 i 16V	E	1796	2ZZ-GE	+/ R134	02/05 ▸ 02/07	8845002240	**814210**	646 377	AL
1.4 D4-D	D	1364	1NDTV	+/ R134	08/04 ▸ 02/07	8845002240	**814210**	646 377	AL
1.4 D4-D	D	1364	1NDTV	+/ R134	08/04 ▸ 02/07	8845002150	**817805**	609 368	AL
2.0 D4-D 16V	D	1995	1CDFTV-DCR,1CDFTV-DCRL	+/ R134	10/01 ▸ 09/02	8846012540	**814238**	653 363	AL
2.0 D4-D 16V	D	1995	1CDFTV-DCR,1CDFTV-DCRL 1CDFTV-HDCR	+/ R134	10/01 ▸ 02/07	8845013031	**817805**	609 368	AL
2.0 D4-D 16V	D	1995	1CDFTV-DCRL	+/ R134	06/04 ▸ 02/07	8845002240	**814210**	646 377	AL

COROLLA (150) (2006>)

1.3 VVT-i 16V	E	1329	1NRFE-HTWC	+/ R134	12/08 ▸ 04/10	8845012280	**814234**	626 370	AL
1.4 VVT-i 16V	E	1398	4ZZFE-HTWC	+/ R134	11/06 ▸ 12/08	8845012280	**814234**	626 370	AL
1.6 VVT-i 16V	E	1598	1ZRFAE-HTWVM,1ZRFE-HTWC	+/ R134	11/06 ▸	8845012280	**814234**	626 370	AL

COROLLA VERSO (2001>2003)

1.6 VVTi 16V	E	1598	3ZZ-FE	+/ R134	10/01 ▸ 12/03	8845013031	**817805**	609 368	AL
1.8 VVTi 16V	E	1794	1ZZ-FE	+/ R134	10/01 ▸ 12/03	8845013031	**817805**	609 368	AL

COROLLA VERSO (2001>2003)

1.8 VVTi 16V	E	1794	1ZZ-FE	+/ R134	01/02 ▸ 12/03	8845002170	**814263**	610 368	AL

COROLLA VERSO (2001>2003)

2.0 D4-D 16V	D	1995	1CDFTV-HDCR	+/ R134	10/01 ▸ 12/03	8845013031	**817805**	609 368	AL

COROLLA VERSO (2004>2009)

1.6 VVTi CAD ▸	E	1598	3ZZ-FE	+/ R134	02/04 ▸ 02/09	884500F100	**814212**	646 390	AL
1.6 VVTi	E	1598	3ZZ-FE	+/ R134	02/04 ▸ 02/09	884500F110	**814211**	646 390	AL
1.8 VVTi 16V CAD ▸	E	1794	1ZZ-FE	+/ R134	02/04 ▸ 02/09	884500F100	**814212**	646 390	AL
1.8 VVTi 16V	E	1794	1ZZ-FE	+/ R134	02/04 ▸ 02/09	884500F110	**814211**	646 390	AL
2.0 D4-D 16V CAD ▸	D	1995	1CDFTV-DCRL	+/ R134	02/04 ▸ 08/05	884500F100	**814212**	646 390	AL
2.0 D4-D 16V	D	1995	1CDFTV-DCRL	+/ R134	02/04 ▸ 08/05	884500F110	**814211**	646 390	AL

IQ

1.0 VVT-i 12V	E	998	1KR-FE	+/ R134	01/09 ▸	8846074010	**814220**	446 391	AL
1.3 VVT-i 16V	E	1329	1NRFE	+/ R134	05/09 ▸	8846074010	**814220**	446 391	AL
1.4 D-4D	D	1364	1NDTV-DCRL	+/ R134	01/09 ▸	8846074010	**814220**	446 391	AL

LAND CRUISER (80>96)

2.4	E	2366	22R, 22RE		12/88 ▸ 12/96	8846160051	**814280**	485 520	AL
4.0	E	3956	3F, 3F-E		11/84 ▸ 08/87	8846160051	**814280**	485 520	AL
4.2	E	4230	2F		10/81 ▸ 01/88	8846160051	**814280**	485 520	AL
2.4 D	D	2446	2L-T		10/85 ▸ 05/90	8846160051	**814280**	485 520	AL
3.4 D	D	3432	3B		10/81 ▸ 07/87	8846160051	**814280**	485 520	AL
4.0 D	D	3980	2H		10/81 ▸ 01/88	8846160051	**814280**	485 520	AL

LAND CRUISER (96>2002)

3.4 i V6	E	3378	5VZ-FE	+/ R134	04/96 ▸ 09/02	8846160100	**814203**	626 522	AL

• **New** Nouveau **Neu** Nuevo **Novo** Nuovo **Nieuw** Nowi **Новый** Novy **Nou** Yeni **Νέους**

Multi-product Crosslist on section 1 Cross List Multi-produits, Section 1
Crossliste siehe Kapitel 1 Crosslist Multiproducto en la sección 1
Lista Multi-produto na secção 1 Cross-list Multi prodotto nella sezione 1
Rubriek 1 : Cross list "alle produkten" Kombinovaný převodník v sekci 1
Crosslist multi-produse, secţie 1 **Çoklu ürün çapraz listesi bölüm 1 tedir**
Αντιστοιχίες προϊόντων στο κεφάλαιο 1

		CC				OE	Valeo	DIM	TECH
TOYOTA (.../...)									
LAND CRUISER (96>2002) (.../...)									
3.0 TD	D	2982	1KD-FTV,1KZ-TE	+/ R134	04/96 ▸ 09/02	8846160100	**814203**	626 522	AL
LAND CRUISER (2002>)									
4.0 i VVT-i 24V	E	3956	1GR-FE	+/ R134	08/04 ▸ 08/09	8846160091	**814230**	630 478	AL
3.0 D-4D 16V	D	2982	1KD-FTV	+/ R134	09/02 ▸ 08/09	8846160100	**814203**	626 522	AL
3.0 D-4D 16V	D	2982	1KD-FTV	+/ R134	09/02 ▸ 08/04	8846135160	**814236**	628 503	AL
PICNIC (96>2001)									
2.0 i 16V	E	1998	3S-FEC		09/96 ▸ 04/98	8846044030	**818105**	632 368	AL
2.0 i	E	1998	3S-FEC	+/ R134	04/98 ▸ 05/01	8846044350	**818032**	594 368	AL
2.2 TD	D	2184	3C-TE		09/97 ▸ 04/98	8846044050	**818105**	632 368	AL
PICNIC (2001>)									
2.0 VVTi 16V	E	1998	1AZ-FE	+/ R134	05/01 ▸ 07/05	8846044440	**814207**	750 398	AL
2.0 D-4D 16V	D	1995	1CDFTV-DCRL	+/ R134	05/01 ▸ 07/05	8846044520	**814207**	750 398	AL
PREVIA (2000>)									
2.0 D-4D 16V	D	1995	1CDFTV-HDCR	+/ R134	02/01 ▸ 01/06	8846028550	**814261**	729 428	AL
2.4 VVTi 16V	E	2362	2AZ-FE	+/ R134	02/00 ▸ 01/06	8846028550	**814261**	729 428	AL
PRIUS (2003>2009)									
1.5 i 16V	E	1497	1NZ-FXE	+/ R134	08/03 ▸	8845047020	**814158**	565 340	AL
RAV 4 (94>2000)									
2.0 i 16V	E	1998	3S-FE,3S-FEC		04/94 ▸ 07/00	8846042021	**814285**	744 302	AL
RAV 4 (2000>2005)									
1.8 i 16V	E	1794	1ZZ-FE	+/ R134	05/00 ▸ 11/05	8846042070	**814218**	730 378	AL
2.0 VVT-i 16V,2.0 i 16V	E	1998	1AZ-FE	+/ R134	05/00 ▸ 11/05	8846042070	**814218**	730 378	AL
2.0 D-4D 16V	D	1995	1CDFTV-DCRL	+/ R134	05/01 ▸ 11/05	8846042070	**814218**	730 378	AL
RAV 4 (2006>)									
2.0 VVTi 158 16V	E	1987	3ZR-FAE-HTVWM	+/ R134	12/08 ▸ 02/10	8846042100	**814204**	706 429	AL
2.0 VVTi 16V	E	1998	1AZ-FE	+/ R134	11/05 ▸ 12/08	8846042100	**814204**	706 429	AL
2.2 D-4D 150 16V,2.2 D-4D 16V	D	2231	2AD-FTV,2ADFHV-DCRL 2ADFHV-DCRL/F 2ADFTV-DCRE/F	+/ R134	11/05 ▸	8846042100	**814204**	706 429	AL
2.4 VVTi 16V	E	2362	2AZ-FE	+/ R134	01/07 ▸	8846042100	**814204**	706 429	AL
YARIS (99>2005)									
1.0 i 16V	E	998	1SZ-FE	+/ R134	04/99 ▸	8846052040	**814309**	494 318	AL
1.0 i 16V CAD ▸	E	998	1SZ-FE	+/ R134	01/99 ▸ 12/02	8846052010	**814307**	489 308	AL
1.0 i 16V	E	998	1SZ-FE	+/ R134	01/99 ▸ 08/05	8846052020	**817674**	488 341	AL
1.3 i 16V	E	1299	2NZ-FE	+/ R134	06/99 ▸ 08/05	8846052020	**817674**	488 341	AL
1.3 i 16V CAD ▸	E	1299	2NZ-FE	+/ R134	06/99 ▸ 12/02	8846052010	**814307**	489 308	AL
1.3 i 16V	E	1299	2NZ-FE, 2SZ-FE	+/ R134	11/99 ▸	8846052040	**814309**	494 318	AL
1.5 VVTi	E	1497	1NZ-FE	+/ R134	01/01 ▸ 08/05	8846052020	**817674**	488 341	AL
1.5 VVTi 16V CAD ▸	E	1497	1NZ-FE	+/ R134	01/01 ▸ 12/02	8846052010	**814307**	489 308	AL
1.4 D-4D CAD ▸	D	1364	1NDTV	+/ R134	10/01 ▸ 12/02	8846052010	**814307**	489 308	AL
1.4 D-4D	D	1364	1ND-TV	+/ R134	12/01 ▸	8846052040	**814309**	494 318	AL
YARIS (2005>)									
1.0 VVTi	E	998	1KR-FE	+/ R134	08/05 ▸	8846052110	**814233**	545 311	AL
1.0 VVTi	E	998	1KR-FE	+/ R134	11/05 ▸	884600D050	**814223**	522 311	AL

Valeo recommends replacing the receiver drier with the condenser
Pensez à changer la bouteille déshydratante avec le condenseur
Denken Sie daran, beim Wechsel des Kondensators auch den Trockner zu erneuern
Piense en la sustitución del filtro deshidratante con el condensador
A Valeo recomenda substituir o filtro desidratante com o condensador
Ricordatevi di sostituire il filtro disidratatore insieme al condensatore
Bij de vervanging van de condensor, vervang tevens de filter-droger

Valeo zaleca wymianę filtra osuszacza wraz ze skraplaczem
Рекомендуем замену осушителя вместо с конденсором
Spolu s kondenzátorem je nutné vyměnit také vysoušeč
Nu uitați sa schimbați uscatorul cu condensatorul
Kondenser değişimlerinde nem alıcının da değiştirilmesi gerektiğini dikkate alınız
Πρέπει να αντικαταστήσετε το φίλτρο υγρού μαζί με το συμπυκνωτή

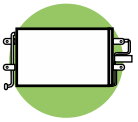

		CC				OE	Valeo	DIM	TECH
TOYOTA (.../...)									
YARIS (2005>) (.../...)									
1.3 VVTi 16V	E	1298	2SZ-FE	R134	11/05 ▸ 11/08	884600D050	**814223**	522 311	AL
1.3 VVTi 100 16V	E	1329	1NRFE-HTWC	R134	11/08 ▸	884600D050	**814223**	522 311	AL
1.4 D4-D	D	1364	1NDTV	R134	01/06 ▸	884600D060	**814224**	522 311	AL
YARIS VERSO									
1.3 i 16V	E	1299	2NZ-FE	R134	08/99 ▸ 08/05	8846052020	**817674**	488 341	AL
1.3 i 16V	E	1299	2NZ-FE	R134	08/99 ▸ 09/05	8846052010	**814307**	489 308	AL
1.3 i 16V	E	1299	2NZ-FE	R134	11/99 ▸	8846052040	**814309**	494 318	AL
1.5 VVT-i 16V	E	1497	1NZ-FE	R134	03/00 ▸ 08/05	8846052020	**817674**	488 341	AL
1.5 VVT-i 16V	E	1497	1NZ-FE	R134	03/00 ▸ 09/05	8846052010	**814307**	489 308	AL
1.4 D-4D	D	1364	1ND-TV	R134	12/01 ▸ 08/05	8846052020	**817674**	488 341	AL
1.4 D-4D	D	1364	1NDTV	R134	10/01 ▸ 09/05	8846052010	**814307**	489 308	AL
1.4 D-4D	D	1364	1ND-TV	R134	12/01 ▸	8846052040	**814309**	494 318	AL
TOYOTA									
HILUX									
1,8 i	E	1812	2Y		08/88 ▸ 07/94	8846035130	**814245**	540 268	AL
2,4 i	E	2383	22R, 22RE		08/88 ▸ 07/94	8846035130	**814245**	540 268	AL
2,4 D	D	2446	2L		08/88 ▸ 07/94	8846035130	**814245**	540 268	AL
2.4 D,2.4 TD	D	2446	2L,2L-T		08/97 ▸ 08/01	8846035200	**814308**	534 278	AL
2.5 D-4D	D	2494	2KD-FTV		08/01 ▸ 02/04	8846035280	**814269**	534 278	AL
VAUXHALL									
ANTARA (2006>)									
2.0 CDTi	D	1991	Z20DMH	R134	10/06 ▸	96805196	•**814359**	636 396	AL
ASTRA IV (98>2005)									
1.2 i 16V ▸ 12999999	E	1199	X12XE, Z12XE	R134	04/98 ▸ 12/01	93170621	**817505**	548 381	AL
1.2 i 16V	E	1199	Z12XE, X12XE		01/02 ▸	93170608	**818047**	549 375	AL
1.4 i 16V ▸ 12999999	E	1389	X14XE	R134	04/98 ▸	93170621	**817505**	548 381	AL
1.4 i 16V 22000001 ▸	E	1389	X14XE		01/02 ▸	93170608	**818047**	549 375	AL
1.6 i, 1.6 i 16V	E	1598	X16SZR, X16XEL, Z16SE/E2	R134	04/98 ▸	93170621	**817505**	548 381	AL
1.6 i, 1.6 i 16V **1.6 i Twinport 16V**	E	1598	Z16XEP(103), X16SZR X16XEL, Z16SE/E2		01/02 ▸	93170608	**818047**	549 375	AL
1.8 i 16V	E	1796	Z18XE	R134	09/00 ▸ 12/01	93170621	**817505**	548 381	AL
1.8 i 16V	E	1796	Z18XE		01/02 ▸	93170608	**818047**	549 375	AL
1.8 i 16V ▸ 12999999	E	1799	X18XE, X18XE1	R134	04/98 ▸ 12/01	93170621	**817505**	548 381	AL
1.8 i 16V 22000001 ▸	E	1799	X18XE1		01/02 ▸	93170608	**818047**	549 375	AL
2.0 SRi Turbo 16V **2.0 i 16VTurbo** ▸ 12999999	E	1998	X20XEV, Z20LET-192 Z20LET-200	R134	04/98 ▸	93170621	**817505**	548 381	AL
2.0 i 16V 22000001 ▸	E	1998	X20XEV		01/02 ▸	93170608	**818047**	549 375	AL
2.2 i 16V	E	2198	Z22SE	R134	07/00 ▸ 12/01	93170621	**817505**	548 381	AL
2.2 i 16V	E	2198	Z22SE		01/02 ▸	93170608	**818047**	549 375	AL
1.7 D Turbo, 1.7 DTi 16V	D	1686	X17DTL, Y17DT		04/98 ▸	93170622	**817506**	414 371	AL
2.0 Di 16V	D	1995	X20DTL, Y20DTL	R134	04/98 ▸	93170621	**817505**	548 381	AL
2.0 Di 16V 22000001 ▸	D	1995	X20DTL, Y20DTL		01/02 ▸	93170608	**818047**	549 375	AL
ASTRA V (2004>)									
1.4 Twinport	E	1364	Z14XEP	R134	03/04 ▸	93178958	**817839**	548 381	AL
1.6 i Twinport	E	1598	Z16XEP	R134	03/04 ▸	93178958	**817839**	548 381	AL

• **New** Nouveau **Neu** Nuevo **Novo** Nuovo **Nieuw** Nowi **Новый** Novy **Nou** Yeni **Νέους**

⏭ **Multi-product Crosslist on section 1** Cross List Multi-produits, Section 1
Crossliste siehe Kapitel 1 Crosslist Multiproducto en la sección 1
Lista Multi-produto na secção 1 Cross-list Multi prodotto nella sezione 1
Rubriek 1 : Cross list "alle produkten" Kombinovaný převodník v sekci 1
Crosslist multi-produse, secţie 1 **Çoklu ürün çapraz listesi bölüm 1 tedir**
Αντιστοιχίες προϊόντων στο κεφάλαιο 1

		CC				OE	Valeo	DIM	TECH
VAUXHALL (.../...)									
ASTRA V (2004>) (.../...)									
1.8 i	E	1796	Z18XE	R134	03/04 ▸	93178958	**817839**	548 381	AL
1.8 i 16V	E	1796	Z18XER	R134	09/05 ▸	93178959	**817846**	588 381	AL
2.0 T, 2.0 i Turbo 16V	E	1998	Z20LEL-170, Z20LER-200	R134	03/04 ▸	93178960	**818114**	588 381	AL
2.0 i Turbo 16V	E	1998	Z20LEH	R134	03/05 ▸	93182213	**818168**	520 331	AL
1.3 CDTi 16V	D	1248	Z13DTH	R134	08/05 ▸	93182213	**818168**	520 331	AL
1.7 CDTI	D	1686	Z17DTH, Z17DTL	R134	03/04 ▸	93178961	**817847**	368 381	AL
1.9 CDTI, 1.9 CDTi 16V	D	1910	Z19DTH, Z19DTL	R134	03/04 ▸	93182213	**818168**	520 331	AL
1.9 CDTI, 1.9 CDTI 16V	D	1910	Z19DT, Z19DTH, Z19DTJ	R134	01/06 ▸	93178961	**817847**	368 381	AL
ASTRA VI (2009>)									
1.4 i Turbo 16V	E	1364	A14NET		01/10 ▸	13267649	**814202**	668 401	AL
1.4 i Turbo 16V	E	1364	A14NET		01/10 ▸	13267648	**814201**	568 401	AL
1.4 i 100 16V,1.4 i 87 16V	E	1398	A14XER		09/09 ▸	13267648	**814201**	568 401	AL
1.6 i 16V	E	1598	A16XER		09/09 ▸	13267649	**814202**	668 401	AL
1.6 i 16V,1.6 i Turbo 16V	E	1598	A16LET,A16XER		09/09 ▸	13267648	**814201**	568 401	AL
1.3 CDTi ecoFLEX 16V	D	1248	A13DTE/F		01/10 ▸	13267648	**814201**	568 401	AL
1.7 CDTi 110 16V	D	1686	A17DTJ/F		09/09 ▸	13267648	**814201**	568 401	AL
1.7 CDTi 16V	D	1686	A17DTR		09/09 ▸	13267649	**814202**	668 401	AL
2.0 CDTi 16V	D	1956	A20DTH/F		01/10 ▸	13267649	**814202**	668 401	AL
CORSA I (93>2000)									
1.0 i 12V	E	973	X10XE		04/97 ▸ 08/00	90511659	**816902**	600 305	AL
1.2 i ▸ R4147676	E	1196	C12NZ		04/93 ▸ 01/94	90541114	**816924**	600 274	AL
1.2 i R4147617 ▸	E	1196	C12NZ		08/93 ▸ 08/98	90511659	**816902**	600 305	AL
1.2 i 16V	E	1199	X12XE		04/97 ▸ 08/00	90511659	**816902**	600 305	AL
1.4 i ▸ R4147676	E	1389	C14SE,C14NZ		04/93 ▸ 01/94	90541114	**816924**	600 274	AL
1.4 i, 1.4 i 16V	E	1389	X14XE, C14NZ, C14SE		04/93 ▸ 08/00	90511659	**816902**	600 305	AL
1.6 i 16V ▸ R4147676	E	1598	C16XE		08/93 ▸ 01/94	90541114	**816924**	600 274	AL
1.6 i 16V R4147617 ▸	E	1598	C16XE, X16XE		08/93 ▸ 08/00	90511659	**816902**	600 305	AL
1.5 D, 1.5 D Turbo ▸ R4147676	D	1488	15TD, 15D		04/93 ▸ 01/94	90541114	**816924**	600 274	AL
1.5 D, 1.5 D Turbo	D	1488	15D, 15TD, X15DT		04/93 ▸ 08/00	90511659	**816902**	600 305	AL
1.7 D	D	1699	17D		02/96 ▸ 08/00	90511659	**816902**	600 305	AL
CORSA II (2000>2003)									
1.0 i 12V	E	973	Z10XE	R134	09/00 ▸ 08/03	93175776	**817609**	548 381	AL
1.2 i 16V	E	1199	Z12XE	R134	09/00 ▸ 08/03	93175776	**817609**	548 381	AL
1.4 i 16V	E	1389	Z14XE	R134	09/00 ▸ 08/03	93175776	**817609**	548 381	AL
1.8 i 16V	E	1796	Z18XE	R134	09/00 ▸ 08/03	93175776	**817609**	548 381	AL
1.7 Di 16V 33064409 ▸	D	1686	Y17DTL	R134	09/00 ▸ 08/03	93175774	**818118**	588 381	AL
CORSA II (2003>2006)									
1.0 i 12V	E	998	Z10XE	R134	01/04 ▸	1850114	**814066**	545 380	AL
1.2 i 16V	E	1199	Z12XE	R134	09/04 ▸	1850114	**814066**	545 380	AL
1.4 i 16V	E	1229	Z14XE	R134	01/04 ▸	1850114	**814066**	545 380	AL
1.0 i, 1.0 i Twinport 12V	E	998	Z10XEP	R134	09/03 ▸ 12/03	93183711	**817843**	548 381	AL
1.2 i 16V	E	1199	Z12XE	R134	09/03 ▸ 12/03	93175776	**817609**	548 381	AL
1.2 i 16V	E	1199	Z12XE	R134	01/04 ▸	93183711	**817843**	548 381	AL
1.4 i Twinport 16V	E	1364	Z14XEP	R134	09/03 ▸ 12/03	93183711	**817843**	548 381	AL
1.8 i 16V	E	1796	Z18XE	R134	09/03 ▸ 12/03	93175776	**817609**	548 381	AL
1.8 i 16V	E	1796	Z18XE	R134	01/04 ▸	93183711	**817843**	548 381	AL
1.3 CDTI 16V	D	1248	Z13DT	R134	09/03 ▸	93177423	**817844**	548 261	AL
1.7 Di 33064409 ▸	D	1686	Y17DTL	R134	09/03 ▸	93175774	**818118**	588 381	AL

Valeo recommends replacing the receiver drier with the condenser
Pensez à changer la bouteille déshydratante avec le condenseur
Denken Sie daran, beim Wechsel des Kondensators auch den Trockner zu erneuern
Piense en la sustitución del filtro deshidratante con el condensador
A Valeo recomenda substituir o filtro desidratante com o condensador
Ricordatevi di sostituire il filtro disidratatore insieme al condensatore
Bij de vervanging van de condensor, vervang tevens de filter-droger

Valeo zaleca wymianę filtra osuszacza wraz ze skraplaczem
Рекомендируем замену осушителя вместо с конденсором
Spolu s kondenzátorem je nutné vyměnit také vysoušeč
Nu uitați sa schimbați uscatorul cu condensatorul
Kondenser değişimlerinde nem alıcının da değiştirilmesi gerektiğini dikkate alınız
Πρέπει να αντικαταστήσετε το φίλτρο υγρού μαζί με το συμπυκνωτή

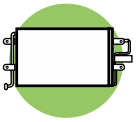

		CC				OE	Valeo	DIM	TECH
VAUXHALL (.../...)									
CORSA II (2003>2006) (.../...)									
1.7 CDTI 16V	D	1686	Z17DTH	+/ R134	09/03 ▸	93177423	**817844**	548 261	AL
CORSA IV (2006>)									
1.0 i Twinport 12V	E	998	Z10XEP	+/ R134	07/06 ▸	55700406	**818193**	552 333	AL
1.2 i Twinport 16V	E	1229	Z12XEP	+/ R134	07/06 ▸	55700406	**818193**	552 333	AL
1.4 i Twinport 16V	E	1364	Z14XEP	+/ R134	07/06 ▸	55700406	**818193**	552 333	AL
1.3 CDTi 75 16V, 1.3 CDTi 90 16V	D	1248	Z13DTH, Z13DTJ	+/ R134	07/06 ▸	55700408	**818192**	623 302	AL
1.7 CDTi 125 16V	D	1686	Z17DTR	+/ R134	07/06 ▸	55700408	**818192**	623 302	AL
MERIVA									
1.4 i Twinport 16V	E	1364	Z14XEP	R134	09/04 ▸ 07/10	13128931	**•817798**	538 361	AL
1.6 i,1.6 i Turbo 16V	E	1598	Z16LET,Z16SE		05/03 ▸ 07/10	13148296	**•814014**	538 361	AL
1.6 i,1.6 i 16V	E	1598	Z16SE,Z16XE,Z16XEP	R134	05/03 ▸ 07/10	13128931	**•817798**	538 361	AL
1.8 i 16V	E	1796	Z18XE	R134	05/03 ▸ 07/10	13128931	**•817798**	538 361	AL
1.3 CDTi 16V	D	1248	Y13DT,Z13DT,Z13DTJ		08/03 ▸ 07/10	13148296	**•814014**	538 361	AL
1.7 DTi 16V	D	1686	Y17DT	R134	05/03 ▸ 07/10	13128931	**•817798**	538 361	AL
1.7 CDTi 16V	D	1686	Z17DTH		08/03 ▸ 07/10	13148296	**•814014**	538 361	AL
SIGNUM (2003>2005)									
2.0 i Turbo 16V	E	1998	Z20NET	+/ R134	06/03 ▸	24418364	**817852**	610 410	AL
2.2 DIG 16V	E	2198	Z22YH	+/ R134	06/03 ▸	24418362	**817647**	658 411	AL
3.2 i V6 24V	E	3175	Z32SE	+/ R134	06/03 ▸	24418362	**817647**	658 411	AL
1.9 CDTI, 1.9 CDTi 16V	D	1910	Z19DTH, Z19DTJ	+/ R134	04/04 ▸	13114943	**817809**	619 417	AL
2.0 DTi 16V	D	1995	Y20DTH	+/ R134	06/03 ▸	24418363	**817648**	658 411	AL
2.2 DTi 16V	D	2171	Y22DTR	+/ R134	06/03 ▸	24418363	**817648**	658 411	AL
3.0 CDTi V6 24V	D	2958	Y30DT	+/ R134	06/03 ▸	13106817	**817853**	478 401	AL
SIGNUM B (2005>)									
1.8 i 16V	E	1796	Z18XE	+/ R134	10/05 ▸	24418362	**817647**	658 411	AL
2.0 i Turbo 16V	E	1998	Z20NET	+/ R134	10/05 ▸	24418364	**817852**	610 410	AL
2.2 DGI 16V	E	2198	Z22YH	+/ R134	10/05 ▸	24418362	**817647**	658 411	AL
1.9 CDTI, 1.9 CDTI 16V	D	1910	Z19DTH, Z19DT	+/ R134	10/05 ▸	13114943	**817809**	619 417	AL
TIGRA									
1.4 i 16V	E	1389	X14XE		11/94 ▸ 01/01	90541114	**816924**	600 274	AL
1.6 i 16V	E	1598	X16XE		11/94 ▸ 01/01	90511660	**816924**	600 274	AL
TIGRA TWINTOP									
1.4 i Twinport 16V	E	1364	Z14XEP	+/ R134	07/04 ▸ 12/04	93177215	**817843**	548 381	AL
1.8 i 16V	E	1796	Z18XE	+/ R134	07/04 ▸ 12/04	93177215	**817843**	548 381	AL
1.3 CDTi Twinport 16V	D	1248	Z13DT	+/ R134	07/04 ▸	93177423	**817844**	548 261	AL
VECTRA (95>2002)									
2.0 TDi 16V, 2.0 DTi 16V	D	1995	X20DTH, Y20DTH	+/ R134	09/97 ▸ 06/03	52484484	**817670**	510 370	AL
2.2 DTI 16V	D	2171	Y22DTR	+/ R134	09/00 ▸ 06/03	52484484	**817670**	510 370	AL
VECTRA (2002>2005)									
1.8 i 16V	E	1796	Z18XE	+/ R134	04/02 ▸	24418362	**817647**	658 411	AL
2.0 i Turbo 16V	E	1998	Z20NET	+/ R134	05/03 ▸	24418364	**817852**	610 410	AL
2.2 DGI 16V, 2.2 i 16V	E	2198	Z22SE, Z22YH	+/ R134	04/02 ▸	24418362	**817647**	658 411	AL
3.2 i V6 24V	E	3175	Z32SE	+/ R134	04/02 ▸	24418362	**817647**	658 411	AL
1.9 CDTI, 1.9 CDTI 16V	D	1910	Z19DTH, Z19DTJ	+/ R134	04/04 ▸	13114943	**817809**	619 417	AL
2.0 DTI 16V	D	1995	Y20DTH	+/ R134	04/02 ▸	24418363	**817648**	658 411	AL
2.2 DTI 16V	D	2171	Y22DTR	+/ R134	04/02 ▸	24418363	**817648**	658 411	AL
3.0 CDTi V6 24V	D	2958	Y30DT	+/ R134	07/03 ▸	13106817	**817853**	478 401	AL
VECTRA C (2005>)									
1.6 i 16V	E	1598	Z16XE	+/ R134	10/05 ▸	24418362	**817647**	658 411	AL

• **New** Nouveau **Neu** Nuevo **Novo** Nuovo **Nieuw** Nowi **Новый** Novy **Nou** Yeni **Νέους**

⏭ **Multi-product Crosslist on section 1** Cross List Multi-produits, Section 1
Crossliste siehe Kapitel 1 Crosslist Multiproducto en la sección 1
Lista Multi-produto na secção 1 Cross-list Multi prodotto nella sezione 1
Rubriek 1 : Cross list "alle produkten" Kombinovaný převodník v sekci 1
Crosslist multi-produse, secţie 1 **Çoklu ürün çapraz listesi bölüm 1 tedir**
Αντιστοιχίες προϊόντων στο κεφάλαιο 1

		CC				OE	Valeo	DIM	TECH
VAUXHALL (.../...)									
VECTRA C (2005>) (.../...)									
1.8 i 16V	E	1796	Z18XE	R134	10/05 ▸	24418362	**817647**	658 411	AL
2.0 i Turbo 16V	E	1998	Z20NET	R134	10/05 ▸	24418364	**817852**	610 410	AL
2.2 DGI 16V	E	2198	Z22YH	R134	10/05 ▸	24418362	**817647**	658 411	AL
1.9 CDTI, 1.9 CDTI 16V	D	1910	Z19-100,Z19DTH,Z19DTL	R134	10/05 ▸	13114943	**817809**	619 417	AL
ZAFIRA (99>2003)									
1.6 i 16V	E	1598	X16XEL	R134	05/99 ▸ 01/02	93170621	**817505**	548 381	AL
1.6 i 16V ▸ 22000001 ▸	E	1598	X16XEL		01/02 ▸ 06/03	93170608	**818047**	549 375	AL
1.8 i 16V	E	1796	Z18XE		01/02 ▸ 06/03	93170608	**818047**	549 375	AL
1.8 i 16V	E	1799	X18XE1	R134	05/99 ▸ 12/01	93170621	**817505**	548 381	AL
1.8 i 16V ▸ 22000001 ▸	E	1799	X18XE1		01/02 ▸	93170608	**818047**	549 375	AL
2.0 i Turbo 16V	E	1998	Z20LET-192, Z20LET-200	R134	10/01 ▸ 06/03	93170621	**817505**	548 381	AL
2.2 i 16V	E	2198	Z22SE	R134	08/00 ▸ 12/01	93170621	**817505**	548 381	AL
2.2 i 16V	E	2198	Z22SE		01/02 ▸ 06/03	93170608	**818047**	549 375	AL
2.0 Di ▸ 12999999	D	1995	X20DTL	R134	05/99 ▸ 01/02	93170621	**817505**	548 381	AL
2.0 Di ▸ 22000001 ▸	D	1995	X20DTL		01/02 ▸ 06/03	93170608	**818047**	549 375	AL
ZAFIRA (2003>2005)									
1.6 i 16V	E	1598	Z16XE		07/03 ▸ 06/05	93170608	**818047**	549 375	AL
1.8 i 16V	E	1796	Z18XE		07/03 ▸ 06/05	93170608	**818047**	549 375	AL
2.2 i 16V	E	2198	Z22SE		07/03 ▸ 06/05	93170608	**818047**	549 375	AL
2.2 DTI 16V	D	2171	Y22DTR, Y22DTR-117		07/03 ▸ 06/05	93170622	**817506**	414 371	AL
ZAFIRA II (2005>)									
1.6 i Twinport 16V	E	1598	Z16XEP	R134	07/05 ▸	93178958	**817839**	548 381	AL
1.8 i 16V	E	1796	Z18XER	R134	09/05 ▸	93178958	**817839**	548 381	AL
2.0 i Turbo 16V	E	1998	Z20LER	R134	07/05 ▸	93178960	**818114**	588 381	AL
2.0 Turbo 16V	E	1998	Z20LEH	R134	07/05 ▸	93182213	**818168**	520 331	AL
2.2 i 16V	E	2198	Z22YH	R134	07/05 ▸	93178959	**817846**	588 381	AL
1.9 CDTI, 1.9 CDTi 16V	D	1910	Z19DTL, Z19DT, Z19DTH	R134	07/05 ▸	93182213	**818168**	520 331	AL
VAUXHALL									
COMBO (93>2001)									
1.4 i	E	1389	C14NZ		10/93 ▸ 09/01	93250611	**816902**	600 305	AL
1.7 D	D	1699	17D		10/93 ▸ 09/01	93250611	**816902**	600 305	AL
COMBO (2002>)									
1.4 i Twinport 16V	E	1364	Z14XEP	R134	07/04 ▸	93183711	**817843**	548 381	AL
1.6 i	E	1598	Z16SE/E4	R134	10/01 ▸ 06/04	93175776	**817609**	548 381	AL
1.3 CDTi 16V	D	1248	Z13DT, Z13DTJ	R134	07/04 ▸	93177423	**817844**	548 261	AL
1.7 DTi 16V	D	1686	Y17DT	R134	10/01 ▸	93175774	**818118**	588 381	AL
MOVANO									
1.9 Dti	D	1870	F9Q.7.72		08/00 ▸ 07/02	9109424	**817689**	694 381	AL
2.5 D	D	2445	S8U.7.72		10/98 ▸ 10/01	9161208	**817065**	690 376	AL
2.5 Dti 16V ▸ B425013	D	2463	G9U.7.20		10/01 ▸	9109424	**817689**	694 381	AL
2.8 Dti	D	2800	S9W.7.02		08/00 ▸ 10/01	9109424	**817689**	694 381	AL
VIVARO									
2.0 i 16V	E	1998	F4R.7.20		08/01 ▸	91166018	**817577**	574 437	AL
2.0 i 16V	E	1998	F4R.7.20		08/01 ▸	91168643	**817644**	573 442	AL
1.9 DI, 1.9 DTI	D	1896	F9Q.7.60, F9Q.7.62		08/01 ▸	91166018	**817577**	574 437	AL
1.9 DI, 1.9 DTI	D	1896	F9Q.7.60, F9Q.7.62		08/01 ▸	91168643	**817644**	573 442	AL

Valeo recommends replacing the receiver drier with the condenser
Pensez à changer la bouteille déshydratante avec le condenseur
Denken Sie daran, beim Wechsel des Kondensators auch den Trockner zu erneuern
Piense en la sustitución del filtro deshidratante con el condensador
A Valeo recomenda substituir o filtro desidratante com o condensador
Ricordatevi di sostituire il filtro disidratatore insieme al condensatore
Bij de vervanging van de condensor, vervang tevens de filter-droger

Valeo zaleca wymianę filtra osuszacza wraz ze skraplaczem
Рекомендируем замену осушителя вместо с конденсором
Spolu s kondenzátorem je nutné vyměnit také vysoušeč
Nu uitați sa schimbați uscatorul cu condensatorul
Kondenser değişimlerinde nem alıcının da değiştirilmesi gerektiğini dikkate alınız
Πρέπει να αντικαταστήσετε το φίλτρο υγρού μαζί με το συμπυκνωτή

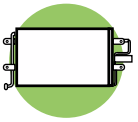

		CC				OE	Valeo	DIM	TECH
VAUXHALL (.../...)									
VIVARO (.../...)									
2.5 DTI	D	2464	G9U.7.30	N/ R134	05/03 ▸ 06/06	91168188	**817645**	658 411	AL
VIVARO (2006>)									
2.0 CDTi 16V	D	1995	M9R.7.80		07/06 ▸	93857127	**814172**	545 440	AL
2.5 CDTi 16V	D	2464	G9U.6.30		07/06 ▸	93857126	**814171**		AL
VOLKSWAGEN									
BORA									
1.4 i 16V	E	1390	AHW, AKQ, APE, AXP, BCA		09/98 ▸ 04/02	1J0820413N	**817244**	548 361	AL
1.6 FSI, 1.6 FSI 16V, 1.6 i 1.6 i 16V	E	1595	AEH, AKL, APF, ATN, AUS AVU, AZD, BAD, BCB		09/98 ▸ 04/02	1J0820413N	**817244**	548 361	AL
1.8 i 20V, 1.8 i Turbo 20V	E	1781	AGN, AGU, ARX, AUM		02/99 ▸ 04/02	1J0820413N	**817244**	548 361	AL
2.0 i	E	1984	APK, AQY, AZH, AZJ		09/98 ▸ 04/02	1J0820413N	**817244**	548 361	AL
2.3 i V5, 2.3 i V5 20V	E	2324	AGZ, AQN		09/98 ▸ 04/02	1J0820413N	**817244**	548 361	AL
2.8 i VR6, 2.8 i VR6 24V	E	2792	AQP, AUE, BDE		05/99 ▸ 04/02	1J0820413N	**817244**	548 361	AL
1.9 SDi, 1.9 TDi	D	1896	AGP/R, AHF, AJM, ALH AQM, ASV/Z, ATD, AUY AXR		09/98 ▸ 04/02	1J0820413N	**817244**	548 361	AL
1.9 TDi	D	1896	ARL	R134	09/00 ▸ 05/05	1J0820413H	•**814357**	540 353	AL
EOS									
1.6 FSI 16V	E	1598	BLF	+/ R134	05/06 ▸	1K0820411H	**817777**	584 401	AL
2.0 FSi 16V, 2.0 TFSi 16V	E	1984	BVY, BVZ, BWA	+/ R134	05/06 ▸	1K0820411H	**817777**	584 401	AL
3.2 i V6	E	3200	BUB	+/ R134	05/06 ▸	1K0820411H	**817777**	584 401	AL
2.0 Tdi 16V	D	1968	BMM	+/ R134	05/06 ▸	1K0820411H	**817777**	584 401	AL
FOX									
1.2 i	E	1198	BMD	+/ R134	11/04 ▸	6Q0820411K	**817686**	468 361	AL
1.4 i	E	1400	BKR	+/ R134	11/04 ▸	6Q0820411K	**817686**	468 361	AL
1.4 TDi	D	1422	BNM	+/ R134	11/04 ▸	6Q0820411K	**817686**	468 361	AL
GOLF II CABRIOLET (93>98)									
1.6 i	E	1598	AEK, AFT, AKS		07/94 ▸ 02/98	1H0820413	**816910**	548 361	AL
1.8 i	E	1781	AAM, ABS, ADZ, ANN, ANP		09/93 ▸ 02/98	1H0820413	**816910**	548 361	AL
2.0 i	E	1984	ADY, 2E, AGG, AKR		09/93 ▸ 02/98	1H0820413	**816910**	548 361	AL
1.9 TDi	D	1896	AFN, 1Z, AHU, ALE		08/95 ▸ 02/98	1H0820413	**816910**	548 361	AL
GOLF III (91>97)									
1.4, 1.4 i	E	1391	ABD		11/91 ▸ 07/95	1H0820413	**816910**	548 361	AL
1.4, 1.4 i	E	1391	AEX, APQ		07/95 ▸ 12/97	1H1820413	**816910**	548 361	AL
1.6, 1.6 i	E	1598	AFT, ABU, AEA/E/K, AKS		11/91 ▸ 12/97	1H1820413	**816910**	548 361	AL
1.8, 1.8 i	E	1781	ABS, AAM, ACC, ADZ ANN/P		11/91 ▸	1H1820413	**816910**	548 361	AL
2.0 16V, 2.0 E, 2.0 i	E	1984	2E, ABF, ADY, AEP, AGG AKR		11/91 ▸ 12/97	1H1820413	**816910**	548 361	AL
2.8 VR6	E	2792	AAA		01/92 ▸ 12/97	1H1820413	**816910**	548 361	AL
2.9 i VR6 1HRR480001 ▸	E	2861	ABV		01/94 ▸	1H0820413	**816910**	548 361	AL
1.9 D, 1.9 D Ecomatic, 1.9 SDi 1.9 SDi Ecomatic, 1.9 TD 1.9 TDi	D	1896	1Y, 1Z, AAZ, AEY, AFN AHU, ALE		11/91 ▸ 12/97	1H1820413	**816910**	548 361	AL
GOLF III CABRIOLET (98>2002)									
1.6 i	E	1598	AFT, AKS	N	03/98 ▸ 10/00	1HM820413B	**817024**	565 338	AL
1.8 i	E	1781	ADZ, AAM, ANN, ANP	N	03/98 ▸ 10/00	1HM820413B	**817024**	565 338	AL
2.0 i	E	1984	AGG, AKR, ATU, AWF, AWG	N	03/98 ▸ 06/02	1HM820413B	**817024**	565 338	AL
1.9 TDi	D	1896	AFN, AHU, ALE, AVG	N	03/98 ▸ 12/01	1HM820413B	**817024**	565 338	AL
GOLF IV (97>2003)									
1.4 i 16V	E	1390	AHW, AKQ, APE, AXP, BCA		10/97 ▸	1J0820413N	**817244**	548 361	AL

• **New** Nouveau **Neu** Nuevo **Novo** Nuovo **Nieuw** Nowi **Новый** Novy **Nou** Yeni **Νέους**

⏭ **Multi-product Crosslist on section 1** Cross List Multi-produits, Section 1
Crossliste siehe Kapitel 1 Crosslist Multiproducto en la sección 1
Lista Multi-produto na secção 1 Cross-list Multi prodotto nella sezione 1
Rubriek 1 : Cross list "alle produkten" Kombinovaný převodník v sekci 1
Crosslist multi-produse, secţie 1 **Çoklu ürün çapraz listesi bölüm 1 tedir**
Αντιστοιχίες προϊόντων στο κεφάλαιο 1

		cc				OE	Valeo	DIM	TECH
VOLKSWAGEN (.../...)									
GOLF IV (97>2003) (.../...)									
1.6 FSI, 1.6 i, 1.6 i 16V	E	1595	BCB, AEH, AKL, APF, ATN AUS, AVU, AZD, BAD, BFQ		10/97 ▸	1J0820413N	**817244**	548 361	AL
1.8 i, 1.8 i 20V, 1.8 i Turbo 1.8 i Turbo 20V	E	1781	ARZ, AGN, AGU, AUM, AUQ		10/97 ▸	1J0820413N	**817244**	548 361	AL
2.0 i	E	1984	AZH, APK, AQY, AZG, AZJ BEH		08/98 ▸	1J0820413N	**817244**	548 361	AL
2.3 i VR5, 2.3 i VR5 20V	E	2324	AQN, AGZ		10/97 ▸	1J0820413N	**817244**	548 361	AL
2.8 i V6, 2.8 i VR6	E	2792	AUE, AQP, BDE		05/99 ▸	1J0820413N	**817244**	548 361	AL
3.2 i V6 R32	E	3189	BFH		06/02 ▸	1J0820413N	**817244**	548 361	AL
1.9 SDi, 1.9 TDi	D	1896	ASV/Z, AGP/R, AHF, AJM ALH, AQM, ATD, AUY, AXR		10/97 ▸	1J0820413N	**817244**	548 361	AL
1.9 TDi	D	1896	ARL	R134	09/00 ▸ 05/06	1J0820413H	•**814357**	540 353	AL
GOLF V (2003>2009)									
1.4 FSI 16V, 1.4 i 16V	E	1390	BKG, BCA, BLN	+/ R134	10/03 ▸ 06/09	1K0820411H	**817777**	584 401	AL
1.4 TSi 16V	E	1390	BLG, BMY	+/ R134	11/05 ▸ 06/09	1K0820411H	**817777**	584 401	AL
1.6 i	E	1595	BGU, BSE, BSF	+/ R134	01/04 ▸ 06/09	1K0820411H	**817777**	584 401	AL
1.6 FSI 16V	E	1598	BLP, BAG, BLF	+/ R134	10/03 ▸ 06/09	1K0820411H	**817777**	584 401	AL
1.6 FSI 16V ▸ 1K-5-600 00	E	1598	BHY	+/ R134	04/04 ▸ 06/09	1K0820411H	**817777**	584 401	AL
2.0 FSI 16V, 2.0 i 16V 2.0 TFSi	E	1984	BLX, AXW, AXX, BLR, BLY	+/ R134	10/03 ▸ 06/09	1K0820411H	**817777**	584 401	AL
3.2 i VR6 24V	E	3189	BUB	+/ R134	11/05 ▸ 06/09	1K0820411H	**817777**	584 401	AL
1.9 TDI	D	1896	BKC, BJB, BLS,BXE,BXF BRU	+/ R134	10/03 ▸ 06/09	1K0820411H	**817777**	584 401	AL
2.0 SDi, 2.0 TDI 16V	D	1968	BKD, AZV, BDK, BMM, BNM	+/ R134	10/03 ▸ 06/09	1K0820411H	**817777**	584 401	AL
GOLF PLUS (2005>2009)									
1.4 FSI 16V, 1.4 i 16V	E	1390	BCA, BLN	+/ R134	01/05 ▸ 06/09	1K0820411H	**817777**	584 401	AL
1.4 TSi 16V	E	1390	BLG, BMY	+/ R134	05/06 ▸ 01/09	1K0820411H	**817777**	584 401	AL
1.6 i	E	1595	BSE, BSF	+/ R134	01/05 ▸ 01/09	1K0820411H	**817777**	584 401	AL
1.6 FSI 16V	E	1598	BLF	+/ R134	01/05 ▸ 01/09	1K0820411H	**817777**	584 401	AL
2.0 FSi 16V	E	1984	BLR, BLY, BVY, BVZ	+/ R134	01/05 ▸ 01/09	1K0820411H	**817777**	584 401	AL
1.9 Tdi	D	1896	BLS, BKC, BRU, BXE, BXF	+/ R134	01/05 ▸ 01/09	1K0820411H	**817777**	584 401	AL
2.0 Tdi 16V	D	1968	AZV, BEE, BKD, BMM, BVB	+/ R134	01/05 ▸ 01/09	1K0820411H	**817777**	584 401	AL
GOLF VI (2008>)									
1.4 TFSi,1.4 TSi	E	1390	CAVD,CAXA	+/ R134	10/08 ▸	1K0820411Q	**817777**	584 401	AL
1.6 i	E	1595	BSE,BSF,CCSA	+/ R134	10/08 ▸	1K0820411Q	**817777**	584 401	AL
1.6 i	F	1595	CHGA	+/ R134	03/09 ▸	1K0820411Q	**817777**	584 401	AL
2.0 TDI 16V	D	1968	CBAA,CBAB,CBDC	+/ R134	10/08 ▸	1K0820411Q	**817777**	584 401	AL
GOLF VI PLUS (2009>)									
1.4 TSI 16V,1.4 i 16V	E	1390	BUD,CAVD,CAXA,CGGA	+/ R134	01/09 ▸	1K0820411Q	**817777**	584 401	AL
1.6 i	E	1595	BSE,BSF,CCSA	+/ R134	01/09 ▸	1K0820411Q	**817777**	584 401	AL
1.6 i	F	1595	CHGA	+/ R134	05/09 ▸	1K0820411Q	**817777**	584 401	AL
1.6 TDI 16V	D	1598	CAYB,CAYC	+/ R134	01/09 ▸	1K0820411Q	**817777**	584 401	AL
2.0 TDI 16V	D	1968	CBDB,CBDC	+/ R134	01/09 ▸	1K0820411Q	**817777**	584 401	AL
JETTA (2000>2003)									
1.8 i Turbo 20V	E	1781	AWP	N/ R134	05/01 ▸ 04/02	1J0820413N	**817244**	548 361	AL
2.0 i	E	1984	AVH,AZG	N/ R134	02/01 ▸ 04/02	1J0820413L	**817244**	548 361	AL
JETTA (2005>)									
1.4 TSi 16V	E	1390	BLG, BMY	+/ R134	07/06 ▸	1K0820411H	**817777**	584 401	AL
1.6 i	E	1598	BSF, BSE	+/ R134	08/05 ▸	1K0820411H	**817777**	584 401	AL
1.6 FSi	E	1598	BLF	+/ R134	08/05 ▸	1K0820411H	**817777**	584 401	AL
2.0 FSi, 2.0 TFSi 16V	E	1984	BLR, BLY, BWA	+/ R134	08/05 ▸	1K0820411H	**817777**	584 401	AL
2.5 i 20V	E	2480	BTK	+/ R134	09/06 ▸ 06/07	1K0820411P	**817777**	584 401	AL

Valeo recommends replacing the receiver drier with the condenser
Pensez à changer la bouteille déshydratante avec le condenseur
Denken Sie daran, beim Wechsel des Kondensators auch den Trockner zu erneuern
Piense en la sustitución del filtro deshidratante con el condensador
A Valeo recomenda substituir o filtro desidratante com o condensador
Ricordatevi di sostituire il filtro disidratatore insieme al condensatore
Bij de vervanging van de condensor, vervang tevens de filter-droger

Valeo zaleca wymianę filtra osuszacza wraz ze skraplaczem
Рекомендуем замену осушителя вместо с конденсором
Spolu s kondenzátorem je nutné vyměnit také vysoušeč
Nu uitați sa schimbați uscatorul cu condensatorul
Kondenser değişimlerinde nem alıcının da değiştirilmesi gerektiğini dikkate alınız
Πρέπει να αντικαταστήσετε το φίλτρο υγρού μαζί με το συμπυκνωτή

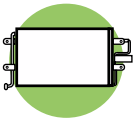

		CC				OE	Valeo	DIM	TECH
VOLKSWAGEN (.../...)									
JETTA (2005>) (.../...)									
1.9 Tdi	D	1896	BLS, BKC	+/ R134	08/05 ▸	1K0820411H	**817777**	584 401	AL
2.0 Tdi 16V	D	1968	AZV, BKD, BMM	+/ R134	08/05 ▸	1K0820411H	**817777**	584 401	AL
JETTA (2010>)									
1.2 Tsi	E	1197	CBZB	+/ R134	10/10 ▸	1K0820411Q	**817777**	584 401	AL
2.0 GLi 16V	E	1984	CCZA		12/10 ▸ 02/11	5C0820411	**•814369**		AL
2.5 i 20V	E	2480	CBTA,CBUA,CCCA		04/10 ▸ 02/11	5C0820411	**•814369**		AL
2.5 i 20V	E	2480	CBTA,CCCA	+/ R134	04/10 ▸	1K0820411Q	**817777**	584 401	AL
1.6 TDI 16V	D	1598	CAYC		04/10 ▸ 02/11	5C0820411	**•814369**		AL
2.0 TDI 16V	D	1968	CFHC,CLCA,CLCB		10/10 ▸ 02/11	5C0820411	**•814369**		AL
LUPO									
1.0 i	E	999	ANV	N/ R134	05/99 ▸ 05/00	6X0820413	**817246**	660 414	AL
1.0 i	E	999	AUC, ALD		05/00 ▸	6X0820413A	**817247**	350 358	AL
1.4 i, 1.4 i 16V	E	1390	AUB, AFK, AHW, APE, AUA AUD, BBY		05/99 ▸	6X0820413A	**817247**	350 358	AL
1.4 FSI 16V	E	1390	ARR		09/00 ▸ 11/03	6X0820413	**817246**	660 414	AL
1.6 i 16V	E	1598	AVY		06/00 ▸	6X0820413A	**817247**	350 358	AL
1.2 TDi	D	1191	ANY, AYZ		05/99 ▸	6X0820413	**817246**	660 414	AL
1.4 TDi	D	1422	AMF		05/99 ▸	6X0820413	**817246**	660 414	AL
1.7 SDi	D	1716	AKU		05/00 ▸	6X0820413A	**817247**	350 358	AL
NEW BEETLE (98>2001)									
1.6 i	E	1595	AWH, AYD		11/99 ▸ 05/01	1C0820413A	**817427**	548 361	AL
1.8 i Turbo 20V	E	1781	AWV, APH, AVC, AWU		01/99 ▸ 05/01	1C0820413A	**817427**	548 361	AL
2.0 i	E	1984	AQY, AEG, APK		01/98 ▸ 05/01	1C0820413A	**817427**	548 361	AL
3.2 i V6 24V	E	3189	AXJ		10/00 ▸ 05/01	1C0820413A	**817427**	548 361	AL
1.9 TDi	D	1896	ALH		11/98 ▸ 05/01	1C0820413A	**817427**	548 361	AL
1.9 TDi	D	1896	ATD		10/00 ▸ 05/01	1J0820413N	**817244**	548 361	AL
NEW BEETLE (2001>2005)									
1.4 i 16V	E	1390	BCA	N/ R134	08/01 ▸ 06/05	1C0820413A	**817427**	548 361	AL
1.6 i	E	1595	AYD, BFS		06/01 ▸	1C0820413A	**817427**	548 361	AL
1.8 i Turbo 20V	E	1781	AWU, AWP, AWV		06/01 ▸	1C0820413A	**817427**	548 361	AL
2.0 i	E	1984	AZJ, AEG, APK, AQY BEJ/R		06/01 ▸	1C0820413A	**817427**	548 361	AL
1.9 TDi	D	1896	ALH		06/01 ▸	1C0820413A	**817427**	548 361	AL
1.9 TDi	D	1896	ATD		06/01 ▸	1J0820413N	**817244**	548 361	AL
PASSAT (96>2000)									
1.6 i	E	1595	AHL, ADP, ANA, ARM		10/96 ▸ 09/00	8D0260403H	**816967**	575 421	AL
1.8 i, 1.8 i 20V 1.8 i Turbo 20V	E	1781	ADR, AEB, AFY, ANB, APT APU, ARG		10/96 ▸ 09/00	8D0260403H	**816967**	575 421	AL
2.0 i	E	2000	AUZ, ASU, AVA		01/00 ▸ 08/00	8D0260403H	**816967**	575 421	AL
2.3 i VR5 20V	E	2324	AGZ		10/96 ▸ 09/00	8D0260403H	**816967**	575 421	AL
2.8 i V6, 2.8 i V6 30V	E	2771	ATX, ACK, AGE, ALG, APR		01/97 ▸ 09/00	8D0260403H	**816967**	575 421	AL
1.9 TDi	D	1896	AHU, AFN, AHH, AJM, AVG		10/96 ▸ 09/00	8D0260403H	**816967**	575 421	AL
1.9 TDi	D	1896	AJM, ATJ, AVG		01/99 ▸ 09/00	8D0260403G	**817840**	578 421	AL
2.5 TDi V6	D	2496	AFB, AKN		08/98 ▸ 09/00	8D0260403G	**817840**	578 421	AL
PASSAT (2000>2005)									
1.6 i	E	1595	ALZ		10/00 ▸ 05/05	3B0260401	**817679**	618 421	AL
1.8 i Turbo 20V	E	1781	AWM, AWT		10/00 ▸ 05/05	3B0260401	**817679**	618 421	AL
2.0 i, 2.0 i 20V	E	1984	ALT, AZM		10/00 ▸ 05/05	3B0260401	**817679**	618 421	AL
2.3 i, 2.3 i V5	E	2324	AZX		01/01 ▸ 05/05	3B0260401	**817679**	618 421	AL
2.8 i, 2.8 i V6	E	2771	AMX, ATQ		10/00 ▸ 05/05	3B0260401	**817679**	618 421	AL
2.8 i, 2.8 i V6	E	2784	BBG		10/00 ▸ 05/05	3B0260401	**817679**	618 421	AL
1.9 TDi	D	1896	AVB, AVF, AWX		10/00 ▸ 05/05	3B0260401	**817679**	618 421	AL
2.0 TDi	D	1968	BGW		11/03 ▸ 05/05	3B0260401	**817679**	618 421	AL

• **New** Nouveau **Neu** Nuevo **Novo** Nuovo **Nieuw** Nowi **Новый** Novy **Nou** Yeni **Νέους**

⏭ **Multi-product Crosslist on section 1** Cross List Multi-produits, Section 1
Crossliste siehe Kapitel 1 Crosslist Multiproducto en la sección 1
Lista Multi-produto na secção 1 Cross-list Multi prodotto nella sezione 1
Rubriek 1 : Cross list "alle produkten" Kombinovaný převodník v sekci 1
Crosslist multi-produse, secţie 1 **Çoklu ürün çapraz listesi bölüm 1 tedir**
Αντιστοιχίες προϊόντων στο κεφάλαιο 1

		CC				OE	Valeo	DIM	TECH
VOLKSWAGEN (.../...)									
PASSAT (2000>2005) (.../...)									
2.5 TDi, 2.5 TDi V6	D	2496	AKN, BAU, BDG, BDH		10/00 ▸ 05/05	3B0260401	**817679**	618 421	AL
PASSAT (2005>2010)									
1.4 TSI CNG 150 16V	F	1390	CDGA	+	11/08 ▸ 07/10	3C0820411C	**814002**	614 441	AL
1.6 i	E	1595	BSE,BSF	+	05/05 ▸ 11/10	3C0820411C	**814002**	614 441	AL
1.6 FSi 16V	E	1598	BLF	+	03/05 ▸ 06/08	3C0820411C	**814002**	614 441	AL
2.0 FSi 16V	E	1984	BLR,BLX,BLY,BVX,BVY,BVZ	+	03/05 ▸ 11/10	3C0820411C	**814002**	614 441	AL
2.0 TDi,2.0 TDi 16V	D	1968	BKP,BMA,BMP,BMR,BUZ,BVD BVE,BWV,CBAA/F,CBAB/F CBAC/F,CBBB/F,CBDC/F	+	03/05 ▸	3C0820411C	**814002**	614 441	AL
1.9 TDi	D	1896	BKC,BLS,BLS/F,BXE	+	03/05 ▸ 11/08	3C0820411C	**814002**	614 441	AL
PASSAT CC									
2.0 TDI,2.0 TDI 16V	D	1968	CBAA/F,CBAB/F,CBBB/F	+	05/08 ▸ 11/10	3C0820411C	**814002**	614 441	AL
POLO (94>99)									
1.0 i	E	999	AER, ALL		07/96 ▸ 12/99	6K0820413B	**816908**	550 350	AL
1.0 i	E	1043	AEV		10/94 ▸ 06/96	6K0820413B	**816908**	550 350	AL
1.3 i	E	1296	ADX		10/94 ▸ 04/97	6K0820413B	**816908**	550 350	AL
1.4 i, 1.4 i 16V	E	1390	AEX, AFH, AKV, ANX, APQ		07/95 ▸ 12/99	6K0820413B	**816908**	550 350	AL
1.6 i	E	1595	1F		05/96 ▸ 09/97	6K0820413B	**816908**	550 350	AL
1.6 i, 1.6 i 16V	E	1598	AEA/E, AFT, AHS, AJV ALM		10/94 ▸ 12/99	6K0820413B	**816908**	550 350	AL
1.8 i	E	1781	ADD		03/98 ▸ 08/99	6K0820413B	**816908**	550 350	AL
2.0 i	E	1984	ADC		05/96 ▸ 08/99	6K0820413B	**816908**	550 350	AL
1.7 SDI	D	1716	AHG, AKU, AKW		04/97 ▸ 12/99	6K0820413B	**816908**	550 350	AL
1.9 D, 1.9 SDI, 1.9 TDi	D	1896	1Y, AEF, AEY, AFN, AGD AHU, ALE		10/94 ▸ 12/99	6K0820413B	**816908**	550 350	AL
POLO (99>2001)									
1.0 i	E	999	ALD, AUC		10/99 ▸ 09/01	6X0820413A	**817247**	350 358	AL
1.4 i, 1.4 i 16V	E	1390	AFK, AHW, AKK, AKP, AUA AUB, AUD		10/99 ▸ 09/01	6X0820413A	**817247**	350 358	AL
1.4 i, 1.4 i 16V	E	1390	AKK, ANW, APE, AUA, AUD		10/99 ▸ 09/01	6K0820413B	**816908**	550 350	AL
1.6 i	E	1595	AKL, AEH, APF		10/99 ▸ 09/01	6K0820413B	**816908**	550 350	AL
1.6 i, 1.6 i 16V	E	1598	ALM, AUR		10/99 ▸ 09/01	6K0820413B	**816908**	550 350	AL
1.6 i 16V	E	1598	ARC, AVY		11/99 ▸ 09/01	6X0820413A	**817247**	350 358	AL
1.8 i	E	1781	ADD		03/00 ▸ 09/01	6K0820413B	**816908**	550 350	AL
2.0 i	E	1984	ADC		06/00 ▸ 09/01	6K0820413B	**816908**	550 350	AL
1.4 TDi	D	1422	AMF		10/99 ▸ 09/01	6X0820413	**817246**	660 414	AL
1.7 SDi	D	1716	AKU		10/99 ▸ 04/00	6K0820413B	**816908**	550 350	AL
1.9 D, 1.9 SDi, 1.9 TDi	D	1896	AEF, AGD, AGP, AGR, ALH AQM, ASV		10/99 ▸ 09/01	6K0820413B	**816908**	550 350	AL
POLO (2001>2004)									
1.2 i 12V	E	1198	AWY,BMD,BME, AZQ	+ R134	11/01 ▸ 07/04	6Q0820411K	**817686**	468 361	AL
1.4 16V, 1.4 FSI 16V, 1.4 i 16V	E	1390	AUA, AUB, AXU, BBY, BBZ BKY	+ R134	11/01 ▸	6Q0820411J	**817686**	468 361	AL
1.4 TDi	D	1422	AMF, BAY	+ R134	11/01 ▸	6Q0820411J	**817686**	468 361	AL
1.9 SDi, 1.9 TDi	D	1896	ASZ, ASY, ATD, AXR	+ R134	11/01 ▸	6Q0820411J	**817686**	468 361	AL
POLO (2005>)									
1.2 i, 1.2 i 12V	E	1198	BME, BMD	+ R134	04/05 ▸	6Q0820411K	**817686**	468 361	AL
1.4 FSi 16V, 1.4 i 16V	E	1390	AXU, BBZ, BKY	+ R134	04/05 ▸	6Q0820411K	**817686**	468 361	AL
1.8 GTI Turbo 20V	E	1781	BJX	+ R134	04/05 ▸	6Q0820411K	**817686**	468 361	AL
1.4 TDi	D	1422	BNM, BMS, BNV	+ R134	04/05 ▸	6Q0820411K	**817686**	468 361	AL
1.9 SDi, 1.9 TDi, 1.9 TDi 16V	D	1896	ATD, ASY, ASZ, AXR, BLT	+ R134	04/05 ▸	6Q0820411K	**817686**	468 361	AL
SCIROCCO (2008>)									
1.4 TSI 16V	E	1390	CAVD	+ R134	08/08 ▸	1K0820411Q	**817777**	584 401	AL

Valeo recommends replacing the receiver drier with the condenser
Pensez à changer la bouteille déshydratante avec le condenseur
Denken Sie daran, beim Wechsel des Kondensators auch den Trockner zu erneuern
Piense en la sustitución del filtro deshidratante con el condensador
A Valeo recomenda substituir o filtro desidratante com o condensador
Ricordatevi di sostituire il filtro disidratatore insieme al condensatore
Bij de vervanging van de condensor, vervang tevens de filter-droger

Valeo zaleca wymianę filtra osuszacza wraz ze skraplaczem
Рекомендируем замену осушителя вместо с конденсором
Spolu s kondenzátorem je nutné vyměnit také vysoušeč
Nu uitați sa schimbați uscatorul cu condensatorul
Kondenser değişimlerinde nem alıcının da değiştirilmesi gerektiğini dikkate alınız
Πρέπει να αντικαταστήσετε το φίλτρο υγρού μαζί με το συμπυκνωτή

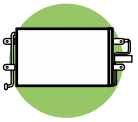

		CC				OE	Valeo	DIM	TECH
VOLKSWAGEN (.../...)									
SCIROCCO (2008>) (.../...)									
2.0 TFSI 16V	E	1984	CAWB	R134	08/08 ▸ 11/09	1K0820411Q	**817777**	584 401	AL
SHARAN (95>2000)									
1.8 i Turbo 20V	E	1781	AJH		11/97 ▸ 02/00	7M0820413F	**816948**	544 366	AL
2.0 i, 2.0 i 16V	E	1984	ABF, ADY		09/95 ▸ 02/00	7M0820413F	**816948**	544 366	AL
2.8 i VR6	E	2792	AAA, AMY		09/95 ▸ 02/00	7M0820413F	**816948**	544 366	AL
1.9 TDi	D	1896	1Z, AFN, AHU, ANU, AVG		09/95 ▸ 02/00	7M0820413F	**816948**	544 366	AL
SHARAN (2000>2003)									
1.8 i Turbo 7M-2-025 001 ▸	E	1781	AWC	R134	04/00 ▸ 05/03	7M3820411A	**818004**	554 361	AL
2.0 i ▸ 7M-2-025 000	E	1984	ATM	R134	04/00 ▸ 05/03	7M3820411A	**818004**	554 361	AL
2.8 i V6, 2.8 i VR6 ▸ 7M-2-025 000	E	2792	AYL	R134	04/00 ▸ 05/03	7M3820411D	**818004**	554 361	AL
1.9 TDi ▸ 7M-2-025 000	D	1896	ANU, ASZ, AUY	R134	04/00 ▸ 05/03	7M3820411A	**818004**	554 361	AL
SHARAN (2003>)									
1.8 i Turbo 20V ▸ 7M-4-024 000	E	1781	AWC	R134	06/03 ▸ 10/03	7M3820411D	**818004**	554 361	AL
2.0 i ▸ 7M-4-024 000	E	1984	ATM	R134	06/03 ▸ 10/03	7M3820411D	**818004**	554 361	AL
2.8 i VR6 ▸ 7M-4-019 698	E	2792	AYL	R134	06/03 ▸ 10/03	7M3820411D	**818004**	554 361	AL
1.9 TDi ▸ 7M-4-024 000	D	1896	AUY, ANU, ASZ	R134	06/03 ▸ 10/03	7M3820411D	**818004**	554 361	AL
2.0 TDi	D	1968	BRT,BVH	R134	11/05 ▸	7M3820411E	**818004**	520 363	AL
TOUAREG									
3.0 TSI V6 24V	E	2995	CGEA		04/10 ▸	7L0820411G	**•817838**	740 391	AL
3.2 i V6 24V	E	3189	AZZ,BAA,BKJ,BMV,BRJ		11/02 ▸	7L0820411D	**•817838**	740 391	AL
3.6 FSI V6 24V	E	3597	BHK,CGRA,CMTA		10/05 ▸	7L0820411G	**•817838**	740 391	AL
4.2 FSi V8 32V	E	4163	BAR		12/06 ▸	7L0820411G	**•817838**	740 391	AL
4.2 i V8 40V	E	4172	AXQ		12/02 ▸	7L0820411G	**•817838**	740 391	AL
4.2 TFSi V8 32V	E	4200	CGNA		01/11 ▸	7L0820411G	**•817838**	740 391	AL
6.0 i W12 48V	E	5998	BJN		08/04 ▸	7L0820411F	**•817838**	740 391	AL
TOUAREG (2002>2006)									
2.5 TDi	D	2460	BAC,BLK,BPD,BPE		01/03 ▸ 11/06	7L0820411D	**•817838**	740 391	AL
TOUAREG (2006>2010)									
2.5 TDi	D	2460	BPD,BPE		12/06 ▸ 05/10	7L0820411G	**•817838**	740 391	AL
TOUAREG									
3.0 TDi V6 24V	D	2967	BKS,BUN,CASA/F,CASC/F		12/06 ▸	7L0820411G	**•817838**	740 391	AL
4.2 TDi V8 32V	D	4134	CKDA		01/10 ▸	7L0820411G	**•817838**	740 391	AL
5.0 TDi V10	D	4921	AYH,BLE		11/02 ▸	7L0820411G	**•817838**	740 391	AL
TOURAN (2003>2006)									
1.4 TSi 16V	E	1390	BMY	R134	02/06 ▸ 11/06	1T0820411E	**817806**	538 441	AL
1.6 i 1T-4-009 001 ▸	E	1595	BGU, BSE, BSF	R134	07/03 ▸	1T0820411E	**817806**	538 441	AL
1.6 FSI 16V ▸ 1T-4-009 000	E	1598	BAG, BLF, BLP	R134	02/03 ▸ 06/03	1T0820411E	**817806**	538 441	AL
2.0 FSi 16V	E	1984	BLY, AXW, BLR, BLX	R134	10/03 ▸	1T0820411E	**817806**	538 441	AL
1.9 TDI ▸ 1T-4-009 000	D	1896	AVQ, BKC	R134	02/03 ▸ 06/03	1T0820411E	**817806**	538 441	AL

• **New** Nouveau **Neu** Nuevo **Novo** Nuovo **Nieuw** Nowi **Новый** Novy **Nou** Yeni **Νέους**

⏭ **Multi-product Crosslist on section 1** Cross List Multi-produits, Section 1
Crossliste siehe Kapitel 1 Crosslist Multiproducto en la sección 1
Lista Multi-produto na secção 1 Cross-list Multi prodotto nella sezione 1
Rubriek 1 : Cross list "alle produkten" Kombinovaný převodník v sekci 1
Crosslist multi-produse, secţie 1 **Çoklu ürün çapraz listesi bölüm 1 tedir**
Αντιστοιχίες προϊόντων στο κεφάλαιο 1

		CC				OE	Valeo	DIM	TECH
VOLKSWAGEN (.../...)									
TOURAN (2003>2006) (.../...)									
2.0 TDI 16V 1T-4-009 001 ▸	D	1968	AZV, BKD, BMN	R134	02/03 ▸	1T0820411E	**817806**	538 441	AL
TOURAN (2006>)									
1.4 TSi	E	1390	BLG, BMY	R134	11/06 ▸	1T0820411E	**817806**	538 441	AL
1.4 TSi 1T-8W057 080 ▸	E	1390	BLG,BMY	R134	11/06 ▸ 05/09	1K0820411Q	**817777**	584 401	AL
1.6 i 1T-8W057 080 ▸	E	1595	BSE,BSF	R134	09/07 ▸ 05/10	1K0820411Q	**817777**	584 401	AL
1.6 i, 1.6 Fsi	E	1598	BSE, BSF, BLF	R134	11/06 ▸	1T0820411E	**817806**	538 441	AL
1.6 FSi 1T-8W057 080 ▸	E	1598	BLF	R134	09/07 ▸	1K0820411Q	**817777**	584 401	AL
2.0 i, 2.0 Fsi	E	1984	BVY, BSX, BVZ	R134	11/06 ▸	1T0820411E	**817806**	538 441	AL
2.0 i 1T-8W057 080 ▸	F	1984	BSX	R134	11/06 ▸ 05/09	1K0820411Q	**817777**	584 401	AL
1.9 TDi	D	1896	BLS, BXE, BXF, BXJ	R134	11/06 ▸	1T0820411E	**817806**	538 441	AL
1.9 TDi 1T-8W057 080 ▸	D	1896	BLS,BLS/F,BXE,BXF,BXJ	R134	11/06 ▸	1K0820411Q	**817777**	584 401	AL
2.0 TDi	D	1968	AZV, BKD, BMN	R134	11/06 ▸	1T0820411E	**817806**	538 441	AL
2.0 TDi 1T-8W057 080 ▸	D	1968	AZV,BKD,BMM/F,BMN	R134	11/06 ▸ 05/10	1K0820411Q	**817777**	584 401	AL
VENTO									
1.4 i	E	1391	ABD		11/91 ▸ 07/95	1H0820413	**816910**	548 361	AL
1.4 i	E	1391	AEX		07/95 ▸ 12/97	1H0820413	**816910**	548 361	AL
1.6 i	E	1598	ABU, AEA/E/K, AFT, AKS		07/92 ▸ 12/97	1H0820413	**816910**	548 361	AL
1.8 i	E	1781	ADZ, AAM, ABS		11/91 ▸ 12/97	1H0820413	**816910**	548 361	AL
2.0 E	E	1984	AGG, 2E, ADY, AEP, AKR		11/91 ▸ 12/97	1H0820413	**816910**	548 361	AL
2.8 i, 2.8 i VR6	E	2792	AAA		01/92 ▸ 12/97	1H0820413	**816910**	548 361	AL
1.9 D, 1.9 SDi, 1.9 TD, 1.9 TDi	D	1896	1Y, 1Z, AAZ, AEY, AFN AHU, ALE		11/91 ▸ 12/97	1H0820413	**816910**	548 361	AL
VOLKSWAGEN									
CADDY (95>2004)									
1.4 i, 1.4 i 16V ▸ 9KTR504050	E	1390	AEX, AKV, APQ, AUA, AUD		11/95 ▸	6K0820413B	**816908**	550 350	AL
1.6 i 9KTR504051 ▸	E	1595	1F		11/95 ▸	6K0820413B	**816908**	550 350	AL
1.6 i	E	1598	AEE		06/96 ▸ 12/00	6K0820413B	**816908**	550 350	AL
1.7 SDi	D	1716	AHB		07/96 ▸ 09/00	6K0820413B	**816908**	550 350	AL
1.9 D, 1.9 SDi, 1.9 TDi	D	1896	AHU, 1Y, 1Z, AEF, AEY ALE, ALH, AYQ		11/95 ▸	6K0820413B	**816908**	550 350	AL
CADDY (2004>)									
1.4 i 16V	E	1390	BCA	R134	02/04 ▸	1T0820411B	**817806**	538 441	AL
1.6 i	E	1595	BSE,BGU,BSF	R134	02/04 ▸	1T0820411B	**817806**	538 441	AL
1.9 TDi	D	1896	BLS,BSU, BJB	R134	02/04 ▸	1T0820411B	**817806**	538 441	AL
2.0 SDi	D	1968	BST,BDJ	R134	02/04 ▸	1T0820411B	**817806**	538 441	AL
1.4 i 16V	E	1390	BUD	R134	05/08 ▸ 08/10	1K0820411Q	**817777**	584 401	AL
1.6 i	E	1595	BSE,BSF	R134	05/08 ▸ 08/10	1K0820411Q	**817777**	584 401	AL
2.0 i CNG	F	1984	BSX	R134	04/06 ▸	1T0820411C	**817806**	538 441	AL
2.0 i CNG	F	1984	BSX	R134	05/08 ▸ 08/10	1K0820411Q	**817777**	584 401	AL
1.9 TDi	D	1896	BJB,BLS,BSU	R134	11/07 ▸ 08/10	1K0820411Q	**817777**	584 401	AL
2.0 SDi,2.0 TDi	D	1968	BDJ,BMM/F,BST	R134	02/04 ▸ 08/10	1K0820411Q	**817777**	584 401	AL
CRAFTER									
2.5 TDi	D	2500	BJJ, BJK, BJL, BJM	R134	04/06 ▸	2E0820413	**818173**	679 461	AL

Valeo recommends replacing the receiver drier with the condenser
Pensez à changer la bouteille déshydratante avec le condenseur
Denken Sie daran, beim Wechsel des Kondensators auch den Trockner zu erneuern
Piense en la sustitución del filtro deshidratante con el condensador
A Valeo recomenda substituir o filtro desidratante com o condensador
Ricordatevi di sostituire il filtro disidratatore insieme al condensatore
Bij de vervanging van de condensor, vervang tevens de filter-droger
Valeo zaleca wymianę filtra osuszacza wraz ze skraplaczem
Рекомендируем замену осушителя вместо с конденсором
Spolu s kondenzátorem je nutné vyměnit také vysoušeč
Nu uitați sa schimbați uscatorul cu condensatorul
Kondenser değişimlerinde nem alıcının da değiştirilmesi gerektiğini dikkate alınız
Πρέπει να αντικαταστήσετε το φίλτρο υγρού μαζί με το συμπυκνωτή

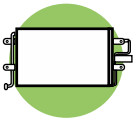

		CC				OE	Valeo	DIM	TECH
VOLVO									
850									
2.0 10V, 2.0 20V, 2.0 Turbo 20V	E	1984	B5202F, B5204F, B5204T		07/93 ▸ 12/96	9171271	**817675**	578 391	AL
2.3 20V, 2.3 Turbo 20V	E	2318	B5234S, B5234T, B5234T5		03/93 ▸ 12/96	9171271	**817675**	578 391	AL
2.5 10V, 2.5 20V, 2.5 i Turbo	E	2435	B5254F, B5252F, B5254T		07/93 ▸ 12/96	9171271	**817675**	578 391	AL
2.5 TDi	D	2461	D5252T		02/96 ▸ 12/96	9171271	**817675**	578 391	AL
S40 (95>2004)									
1.6 i 16V	E	1588	B4164S2, B4164S B4164S-D3		01/97 ▸ 03/04	30871579	**817559**	608 351	AL
1.8 i 16V Auto	E	1731	B4184S-D3, B4184S		10/95 ▸ 08/99	30897260	**817560**	608 351	AL
1.8 i 16V	E	1731	B4184S, B4184S-D3		10/95 ▸ 08/99	30871579	**817559**	608 351	AL
1.8 i 16V Auto	E	1783	B4184S2		04/99 ▸ 03/04	30897260	**817560**	608 351	AL
1.8 i 16V	E	1783	B4184S2, B4184S3		04/99 ▸ 03/04	30871579	**817559**	608 351	AL
1.8 i 16V Auto	E	1834	B4184SM		03/98 ▸ 03/04	30897260	**817560**	608 351	AL
1.8 i 16V	E	1834	B4184SM		03/98 ▸ 03/04	30871579	**817559**	608 351	AL
1.9 i Turbo 16V, 2.0 i 16V **2.0 i Turbo 16V Auto**	E	1948	B4204T, B4194T, B4204S B4204S2		10/95 ▸ 03/04	30897260	**817560**	608 351	AL
2.0 i 16V	E	1948	B4204S, B4204S2		10/95 ▸ 03/04	30871579	**817559**	608 351	AL
1.9 TD, 1.9 Tdi Auto	D	1870	D4192T, D4192T2		07/96 ▸ 07/00	30897260	**817560**	608 351	AL
V40									
1.6 i 16V	E	1588	B4164S, B4164S2 B4164S-D3		05/97 ▸	30871579	**817559**	608 351	AL
1.8 i 16V Auto	E	1731	B4184S, B4184S-D3		10/95 ▸ 08/99	30897260	**817560**	608 351	AL
1.8 i 16V	E	1731	B4184S-D3, B4184S		10/95 ▸ 08/99	30871579	**817559**	608 351	AL
1.8 i 16V Auto	E	1783	B4184S2		04/99 ▸	30897260	**817560**	608 351	AL
1.8 i 16V	E	1783	B4184S3, B4184S2		04/99 ▸	30871579	**817559**	608 351	AL
1.8 i 16V Auto	E	1834	B4184SM		03/98 ▸	30897260	**817560**	608 351	AL
1.8 i 16V	E	1834	B4184SM		03/98 ▸	30871579	**817559**	608 351	AL
1.9 T 16V Auto	E	1855	B4194T2		05/97 ▸ 07/00	30897260	**817560**	608 351	AL
2.0 i 16V	E	1948	B4204S, B4204S2		10/95 ▸	30871579	**817559**	608 351	AL
2.0 T Turbo 16V, 2.0 i 16V Auto	E	1948	B4204S, B4204S2, B4204T		10/95 ▸	30897260	**817560**	608 351	AL
1.9 Tdi Auto	D	1870	D4192T2		01/99 ▸	30897260	**817560**	608 351	AL
1.9 TD	D	1870	D4192T		06/96 ▸ 08/99	30871579	**817559**	608 351	AL
C70									
2.3 i Turbo 20V	E	2316	B5234T3-240		03/97 ▸ 06/02	9171271	**817675**	578 391	AL
2.4 i Turbo	C	2435	B5254T		03/97 ▸ 09/02	9171271	**817675**	578 391	AL
S70									
2.0 i, 2.0 i 10V, 2.0 i Turbo	E	1984	B5202FS, B5204T2 B5204T3, B5204T4		12/96 ▸ 11/00	9171271	**817675**	578 391	AL
2.3 i, 2.3 i Turbo	E	2318	B5234FS, B5234T2 B5234T3, B5234T4		12/96 ▸ 11/00	9171271	**817675**	578 391	AL
2.3 i Turbo	E	2319	B5234T7-E6		05/97 ▸ 11/00	9171271	**817675**	578 391	AL
2.4 i 20V, 2.4 i Turbo 20V **2.5 i 10V, 2.5 i 20V** **2.5 i Turbo 20V**	E	2435	B5244S, B5244S2, B5244T B5252FS, B5254FS B5254S, B5254T		12/96 ▸ 11/00	9171271	**817675**	578 391	AL
2.5 TDi	D	2461	D5252T		12/96 ▸ 11/00	9171271	**817675**	578 391	AL
V70 (96>2000)									
2.0 i 10V, 2.0 i Turbo 20V	E	1984	B5204T3, B5202FS B5204T2, B5204T4		05/97 ▸ 06/98	9171271	**817675**	578 391	AL
2.3 i 20V, 2.3 i Turbo 20V	E	2318	B5234FS, B5234T2/3 B5234T4, B5234T6		05/97 ▸ 06/98	9171271	**817675**	578 391	AL
2.3 i Turbo 20V	E	2319	B5234T7-E6		05/97 ▸ 06/98	9171271	**817675**	578 391	AL
2.4 i 20V/Turbo, 2.5 i 10V **2.5 i 20V/Turbo**	E	2435	B5252FS, B5244S/2 B5244T, B5254FS, B5254T		12/96 ▸ 12/99	9171271	**817675**	578 391	AL
2.5 TDi 10V	D	2461	D5252T		05/97 ▸ 06/98	9171271	**817675**	578 391	AL

• **New** Nouveau **Neu** Nuevo **Novo** Nuovo **Nieuw** Nowi **Новый** Novy **Nou** Yeni **Νέους**

⏭ **Multi-product Crosslist on section 1** Cross List Multi-produits, Section 1
Crossliste siehe Kapitel 1 Crosslist Multiproducto en la sección 1
Lista Multi-produto na secção 1 Cross-list Multi prodotto nella sezione 1
Rubriek 1 : Cross list "alle produkten" Kombinovaný převodník v sekci 1
Crosslist multi-produse, secţie 1 **Çoklu ürün çapraz listesi bölüm 1 tedir**
Αντιστοιχίες προϊόντων στο κεφάλαιο 1

		CC				OE	Valeo	DIM	TECH
VOLVO TRUCKS									
FH12-SERIES									
FH 12/340	D	12100	D12A340, D12C340 D12D340		08/98 ▸	3980841	**818987**	794 338	AL
FH 12/380	D	12100	D12A380, D12C380 D12D380		08/93 ▸	3980841	**818987**	794 338	AL
FH 12/420	D	12100	D12A420, D12C420 D12D420		08/93 ▸	3980841	**818987**	794 338	AL
FH 12/460	D	12100	D12C460, D12D460		08/98 ▸	3980841	**818987**	794 338	AL
FH 12/500	D	12100	D12D500		08/98 ▸	3980841	**818987**	794 338	AL
FH16-SERIES									
FH 16/520	D	16120			1993 ▸	8144690	•**818989**	586 322	AL
FH12-SERIES									
FH 12/340	D	12100			2001 ▸	3962652	•**818990**	744 333	AL
FH 12/380	D	12100			2001 ▸	3962652	•**818990**	744 333	AL
FH 12/420	D	12100			2001 ▸	3962652	•**818990**	744 333	AL
FH 12/380	D	12100			1993 ▸	3962651	•**818991**	587 333	AL
FH16-SERIES									
FH 16/520	D	12100			1993 ▸	3962651	•**818991**	587 333	AL
FH 16/470	D	16120	D16A470		08/93 ▸ 12/99	3980841	**818987**	794 338	AL
FH 16/520	D	16120	D16A520, D16B520		08/93 ▸ 12/02	3980841	**818987**	794 338	AL
FH 16/610	D	16120	D16C610		01/03 ▸	3980841	**818987**	794 338	AL
FL									
6 15	D	5500	TD63E, ES, D			8157212	**818039**	365 534	AL
6 15	D	5500	TD63ES			8157212	**818039**	365 534	AL
6 18	D	5500	TD63E		11/91 ▸	8157212	**818039**	365 534	AL
6 H	D	5500	TD61F, FB			8157212	**818039**	365 534	AL
6 L	D	5500	TD61G, GS, G			8157212	**818039**	365 534	AL
6 M	D	5500	TD61GS, GE			8157212	**818039**	365 534	AL
FL 6	D		D6A, TD63E, ES			8157212	**818039**	365 534	AL
FM-SERIES									
FM 7/250	D	7300	D7C250		08/98 ▸ 12/01	3981637	**818984**	639 328	AL
FM 7/290	D	7300	D7C290		08/98 ▸ 12/01	3981637	**818984**	639 328	AL
FM 9/260	D	9364	D9A260		12/01 ▸ 09/05	3981637	**818984**	639 328	AL
FM 9/300	D	9364	D9A300		12/01 ▸ 09/05	3981637	**818984**	639 328	AL
FM 9/340	D	9364	D9A340		12/01 ▸ 09/05	3981637	**818984**	639 328	AL
FM 9/380	D	9364	D9A380		12/01 ▸ 09/05	3981637	**818984**	639 328	AL
FM 10/320	D	9600	D10B320		04/99 ▸ 12/01	3981637	**818984**	639 328	AL
FM 10/360	D	9600	D10B360		04/99 ▸ 12/01	3981637	**818984**	639 328	AL
FM 12/340	D	12100	D12C340, D12D340		08/98 ▸ 09/05	3981637	**818984**	639 328	AL
FM 12/380	D	12100	D12C380, D12D380		08/98 ▸ 09/05	3981637	**818984**	639 328	AL
FM 12/420	D	12100	D12C420, D12D420		08/98 ▸ 09/05	3981637	**818984**	639 328	AL
FS									
FS 718	D	6700	D7B230, D7B260		09/94 ▸ 03/96	8157212	**818039**	365 534	AL

Valeo recommends replacing the receiver drier with the condenser
Pensez à changer la bouteille déshydratante avec le condenseur
Denken Sie daran, beim Wechsel des Kondensators auch den Trockner zu erneuern
Piense en la sustitución del filtro deshidratante con el condensador
A Valeo recomenda substituir o filtro desidratante com o condensador
Ricordatevi di sostituire il filtro disidratatore insieme al condensatore
Bij de vervanging van de condensor, vervang tevens de filter-droger
Valeo zaleca wymianę filtra osuszacza wraz ze skraplaczem
Рекомендируем замену осушителя вместо с конденсором
Spolu s kondenzátorem je nutné vyměnit také vysoušeč
Nu uitați sa schimbați uscatorul cu condensatorul
Kondenser değişimlerinde nem alıcının da değiştirilmesi gerektiğini dikkate alınız
Πρέπει να αντικαταστήσετε το φίλτρο υγρού μαζί με το συμπυκνωτή

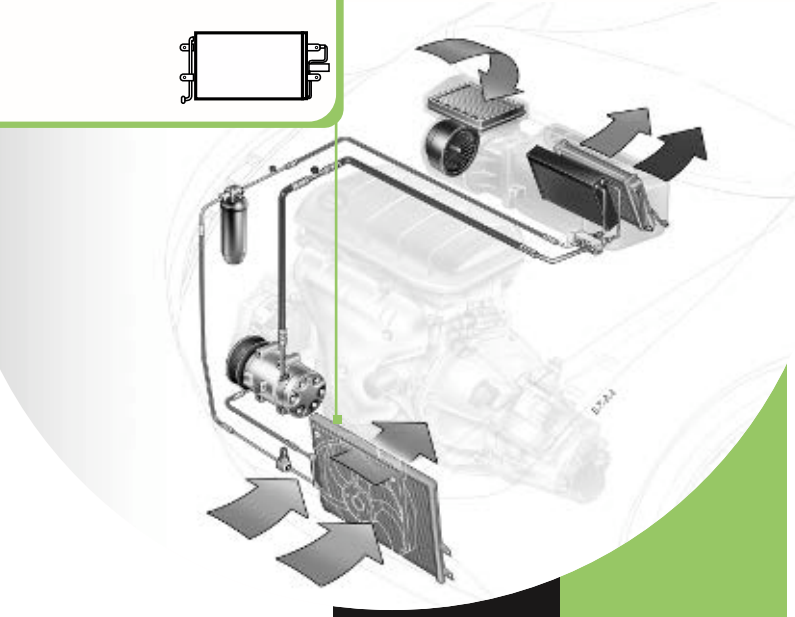

CONDENSER
CONDENSEUR
KONDENSATOR
CONDENSADOR
CONDENSADOR
CONDENSATORE
CONDENSOR
SKRAPLACZ
КОНДЕНСЕР
KONDENSER
KONDENZ TOR
CONDENSATOR
Συμπυκνωτής

TECH.COD.

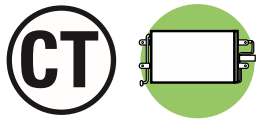

CT	Valeo	
VALEO		
CA004	**816850**	
CA005	**816885**	
CA006	**816852**	
CA1002	**816865**	+🗑
CA1004	**816839**	
CA1007	**816863**	
CA1011	**816921**	
CA1013	**816866**	
CA1014	**816803**	
CA1029	**817065**	
CA1031	**816891**	
CA1091	**817067**	+🗑
CA1092	**816985**	
CA1093	**817042**	
CA1094	**817171**	+🗑
CA1108	**817379**	
CA1113	**817577**	
CA1115	**816912**	
CA1117	**817644**	
CA1120	**817384**	
CA1190	**816981**	
CA1191	**817235**	
CA1192	**816949**	
CA1195	**816948**	
CA1197	**816902**	
CA1202	**816924**	
CA1206	**817244**	
CA1207	**817246**	
CA1209	**817245**	
CA1241	**817463**	
CA1245	**817582**	
CA1246	**817428**	+🗑
CA1247	**817197**	replace CA1116
CA1254	**817547**	+🗑
CA1255	**817526**	+🗑
CA1256	**817579**	+🗑
CA1257	**817602**	
CA1258	**817647**	+🗑
CA1259	**817711**	+🗑

CT	Valeo	
VALEO (.../...)		
CA1261	**817385**	
CA1262	**817386**	
CA1263	**817648**	+🗑
CA1264	**817283**	replace CA1111
CA1265	**818003**	+🗑
CA1269	**817465**	+🗑
CA1321	**817464**	+🗑
CA1322	**817524**	+🗑
CA1351	**817827**	+🗑
CA1413	**817742**	
CA1414	**817712**	+🗑
CA1416	**817668**	+🗑
CA1418	**817375**	replace CA1252
CA1421	**817645**	
CA1422	**817853**	
CA1423	**817549**	replace CA1292
CA1424	**817283**	
CA1426	**817701**	
CA1428	**817852**	
CA1431	**817687**	
CA1436	**817740**	
CA1437	**817508**	+🗑
CA1439	**817601**	replace CA1248
CA1440	**817689**	
CA1443	**817809**	+🗑
CA1456	**818175**	+🗑
CA1463	**818005**	+🗑
CA1464	**817703**	replace CA1434/+🗑
CA1469	**814061**	
CA1470	**818013**	+🗑
CA1472	**817661**	+🗑
CA1473	**817662**	replace CA1095/+🗑
CA1474	**817646**	
CA1475	**818014**	+🗑
CA1476	**817739**	
CA1479	**818002**	
CA1481	**818000**	
CA1482	**818001**	
CA1483	**818173**	+🗑

CT	Valeo	
VALEO (.../...)		
CA1495	**814003**	
CA1498	**814171**	
CA2016	**814172**	
CA1505	**814065**	
CA1506	**814094**	
CA1411	**817608**	replace CA1411
CA1521	**814173**	
CA1531	**818165**	+🗑
CA1532	**818166**	+🗑
CA1538	**814051**	+🗑
CA1539	**814184**	
CA1542	**817824**	replace CA1458
CA1546	**818162**	+🗑
CA1555	**814185**	
CA1556	**814077**	+🗑
CA2001	**816980**	
CA2012	**814197**	
CA2013	**818015**	replace CA1457/+🗑
CA2018	**814090**	
CA2019	**814178**	
CA2033	**814189**	
CA2034	**814190**	
CA2035	**814191**	
CA2038	**814179**	
CA2056	**814187**	
CA2093	**814192**	
MM1001	**733075**	Multi exchanger

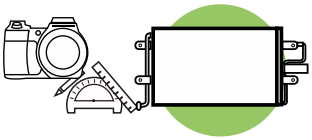

Valeo

Valeo 733075 — 480x414x41

MM1001

RENAULT — 8200211563

Valeo 814004 — 658x401x16

AUDI — 4F0260403E

Valeo 814000 — 591x362x20

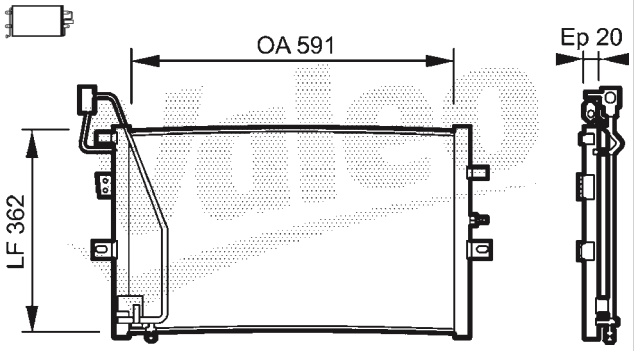

SAAB — 5048350

Valeo 814006 — 660x390x16

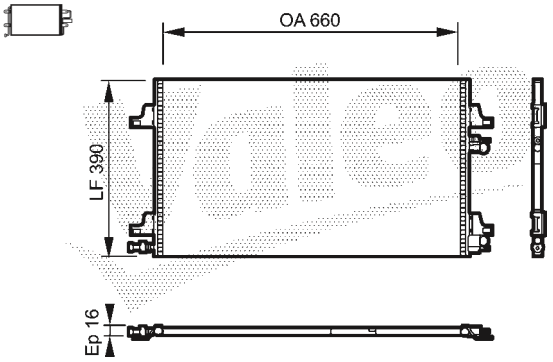

RENAULT — 8200332852

Valeo 814002 — 614x441x16

VOLKSWAGEN — 3C0820411C

Valeo 814007 — 692x431x16

RENAULT — 8200332851

Valeo 814003 — 694x377x16

CA1495

RENAULT — 7701066110

Valeo 814008 — 643x400x16

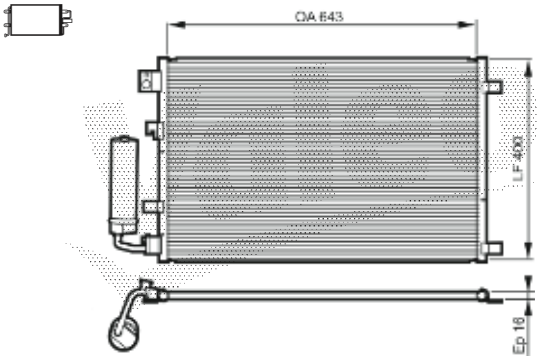

NISSAN — 92100JD200

Valeo 814009 — 643x400x16

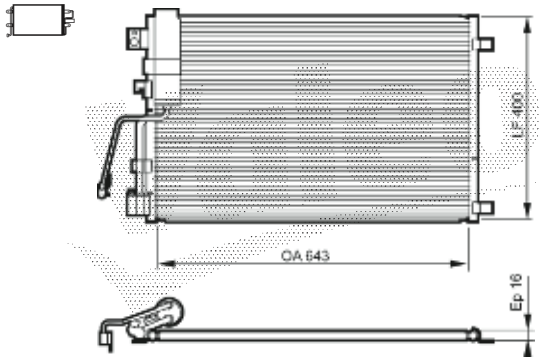

NISSAN	92100JD500

Valeo 814010 — 643x400x16

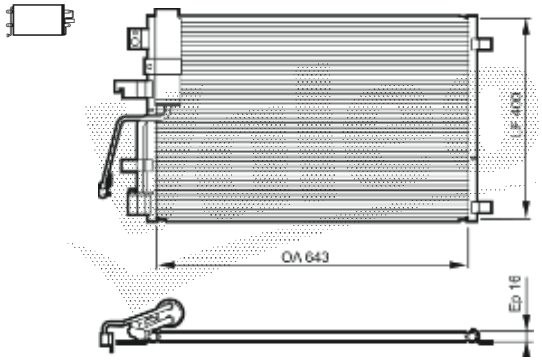

NISSAN	92100JD700

Valeo 814011 — 628x401x16

BMW	64509169772
BMW	64509169791

Valeo 814012 — 628x341x16

BMW	64539169526

Valeo 814014 — 538x361x12

OPEL	1850094
VAUXHALL	13148296

Valeo 814051 — 514x377x16

CA1538

DACIA	6001550660
DACIA	8200513983

Valeo 814061 — 513x396x12

CA1469

RENAULT	8200448252

Valeo 814065 — 670x355x16

CA1505

CITROËN	6455FW
FIAT	1401113180
LANCIA	1401113180

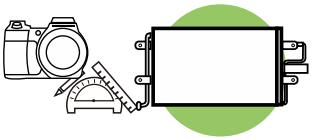

Valeo 814066 — 545x380x16

OPEL	1850114
VAUXHALL	1850114

Valeo 814081 — 568x341x16

CITROËN	6455EC
PEUGEOT	6455EC

Valeo 814069 — 748x291x16

CITROËN	6455EP
PEUGEOT	6455EP

Valeo 814083 — 578x361x16

FORD	1384859

Valeo 814077 — 513x396x12

CA1556

DACIA	8200741257

Valeo 814085 — 710x375x16

CITROËN	6455EQ
PEUGEOT	6455EQ

Valeo 814080 — 520x363x16

CITROËN	6455CN
PEUGEOT	6455CN

Valeo 814087 — 568x391x16

FORD	1383318

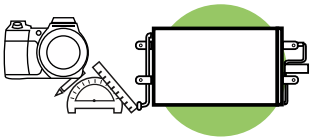

Valeo 814090 — 539x361x16

CA2018

CITROËN — 6455GY

Valeo 814158 — 565x340x17

TOYOTA — 8845047020

Valeo 814094 — 652x350x16

CA1506

RENAULT — 921100001R

Valeo 814159 — 692x382x16

HONDA — 80101SEFE11

Valeo 814095 — 464x371x16

CITROËN
PEUGEOT
6455ET
6455EL

Valeo 814165 — 648x441x16

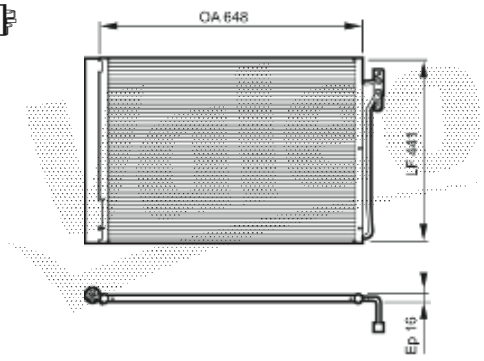

LAND ROVER — JRW000020

Valeo 814155 — 510x370x12

Picture not available
Image non disponible
Nicht verfügbares Bild
Imagen no disponible
Immagine non disponibile
Zdjęcie niedostępne

FIAT — 51786211

Valeo 814167 — 360x271x16

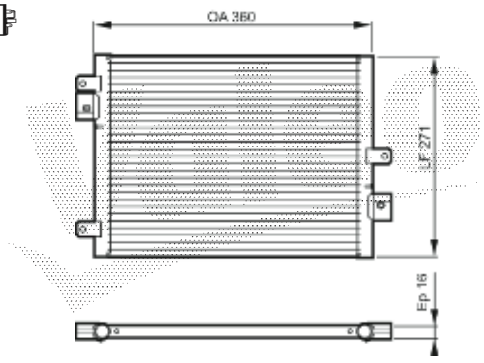

PORSCHE — 99657311103

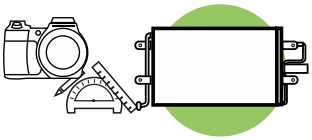

Valeo

Valeo 814171

CA1498

RENAULT	8200774211
VAUXHALL	93857126

Valeo 814172 545x440x16

CA2016

RENAULT	8200465490
VAUXHALL	93857127

Valeo 814173

CA1521

CITROËN	6455GZ
PEUGEOT	6455GZ

Valeo 814178 621x322

CA2019

Picture not available
Image non disponible
Nicht verfügbares Bild
Imagen no disponible
Immagine non disponibile
Zdjęcie niedostępne

DACIA	8200880551

Valeo 814179 760x350

CA2038

Picture not available
Image non disponible
Nicht verfügbares Bild
Imagen no disponible
Immagine non disponibile
Zdjęcie niedostępne

RENAULT	921005824R

Valeo 814184 587x470x16

CA1539

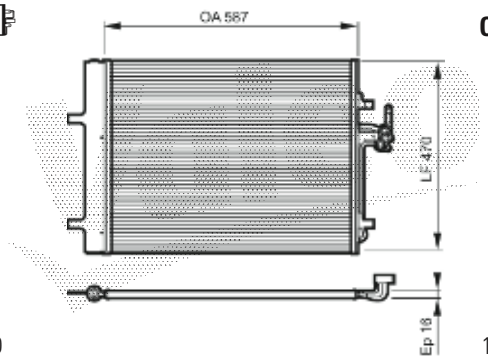

FORD	1405365
FORD	1437112
LAND ROVER	LR000566

Valeo 814185 587x470x16

CA1555

FORD	1522067

Valeo 814186 688x371x16

MERCEDES	1715000154

Valeo 814187 — 652x349,75x16

CA2056

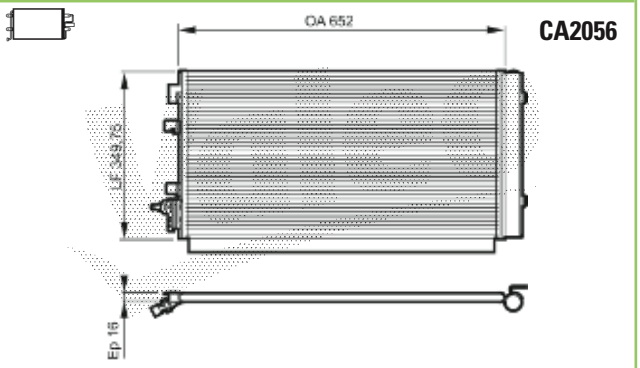

RENAULT — 921000294R

Valeo 814192 — 595x479,25x16

CA2037

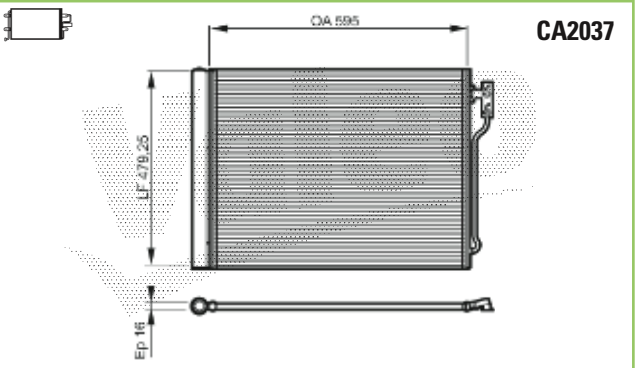

BMW — 64537618770

Valeo 814189 — 605x348,25x16

CA2033

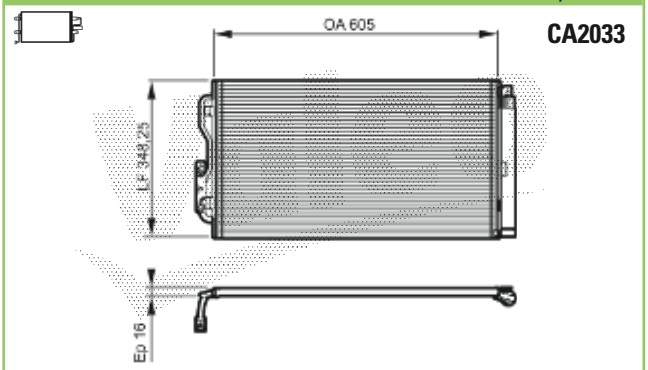

BMW — 64509218121

Valeo 814197 — 587x470x16

CA2012

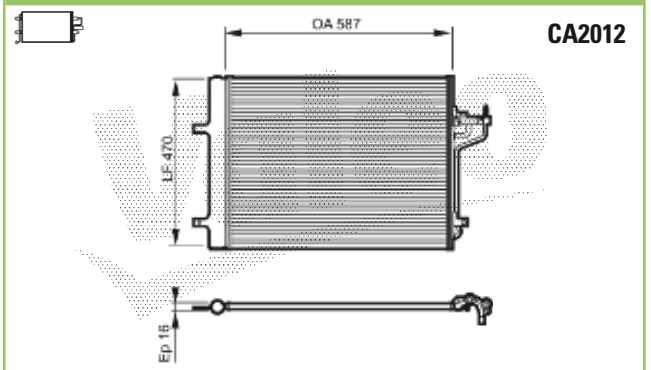

FORD — 8V6119710FA

Valeo 814190 — 605x348,25x16

CA2034

BMW — 64539218122

Valeo 814198 — 544x351x16

LANCIA — 51708843

Valeo 814191 — 605x399,5x16

CA2035

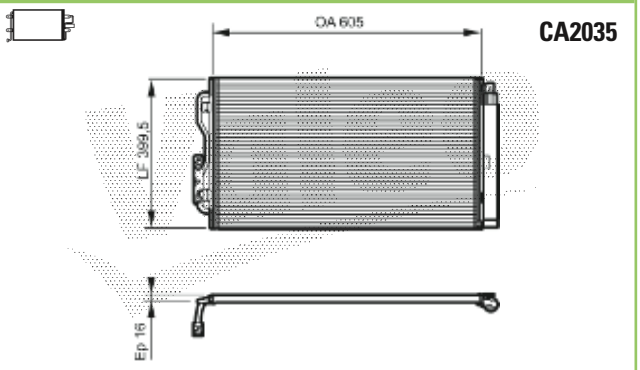

BMW — 64539218123

Valeo 814199 — 668x311x16

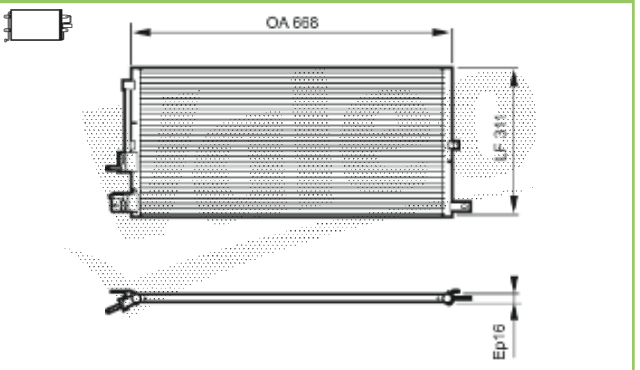

JAGUAR — C2S31605

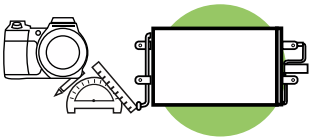

Valeo 814201 — 568x401x16

OPEL	1850136
VAUXHALL	13267648

Valeo 814202 — 668x401x16

OPEL	1850135
VAUXHALL	13267649

Valeo 814203 — 626x522x16

TOYOTA	8846160100

Valeo 814204 — 706x429x16

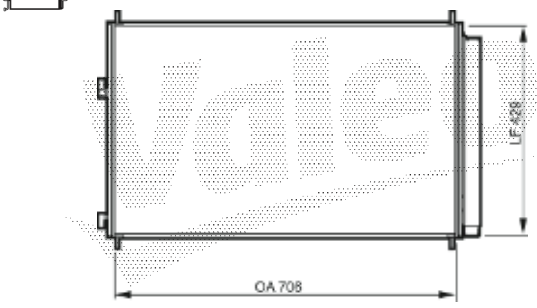

TOYOTA	8846042100

Valeo 814205 — 696x346x16

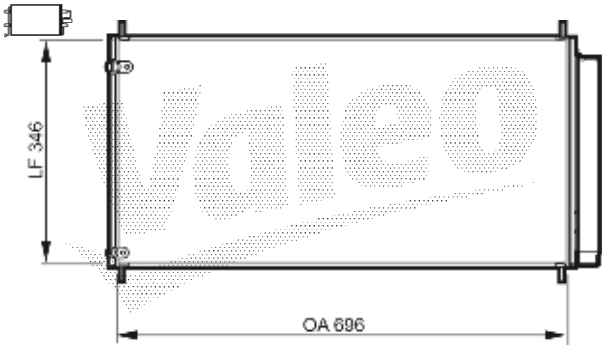

TOYOTA	8845012290

Valeo 814206 — 526x365x16

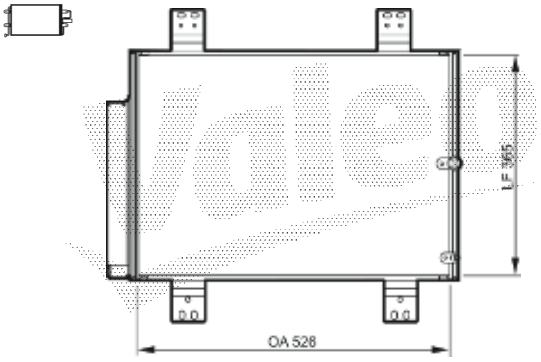

DAIHATSU	88450B4020

Valeo 814207 — 750x398x16

TOYOTA	8846044440
TOYOTA	8846044520

Valeo 814208 — 646x390x16

TOYOTA	8845005100

Valeo 814209 — 646x384x16

TOYOTA — 8845005120

Valeo 814210 — 646x377x16

TOYOTA — 8845002240

Valeo 814211 — 646x390x16

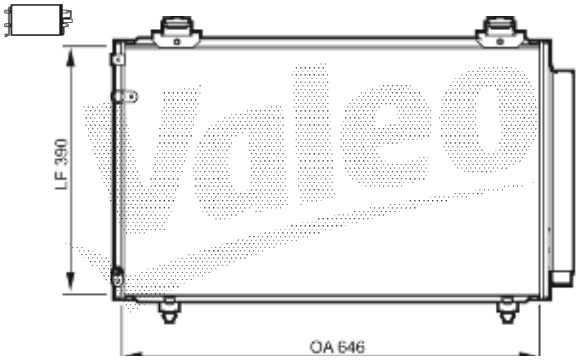

TOYOTA — 884500F110

Valeo 814212 — 646x390x16

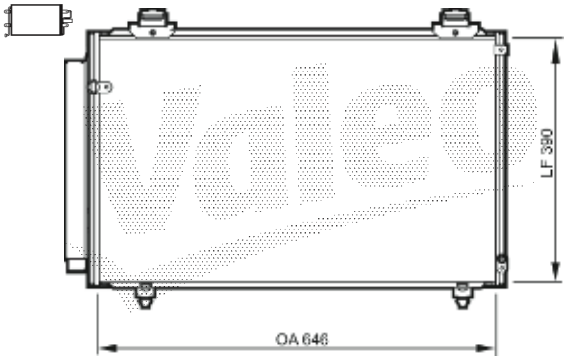

TOYOTA — 884500F100

Valeo 814213 — 646x390x16

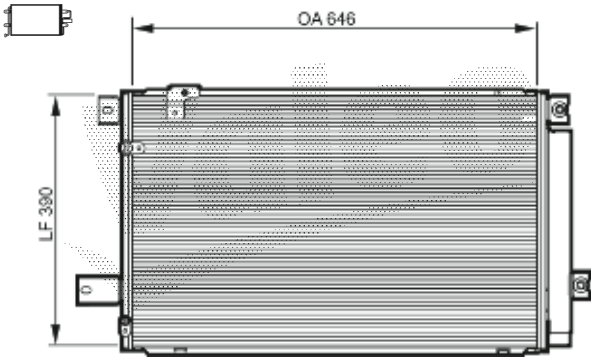

TOYOTA — 8845005170

Valeo 814214 — 467x434x16

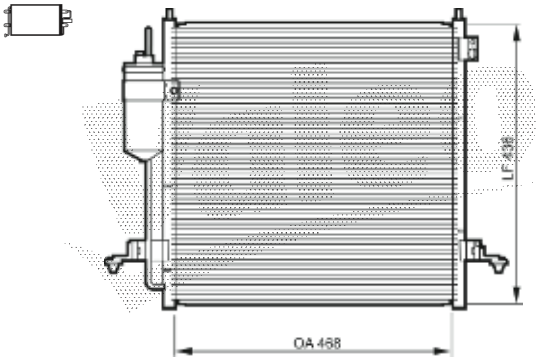

MITSUBISHI — 7812A171

Valeo 814215 — 606x320x16

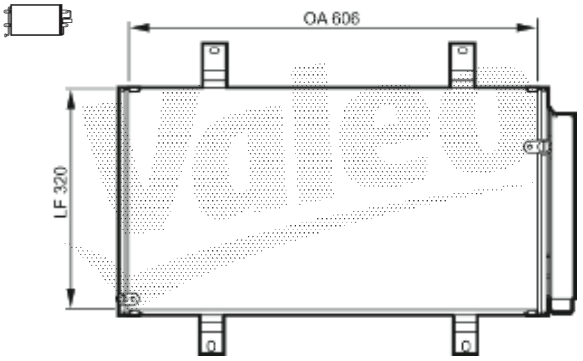

MAZDA — F15161480

Valeo 814216 — 599x383x16

MAZDA — BPYK6148ZA

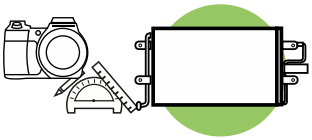

Valeo 814217 — 673x383x16

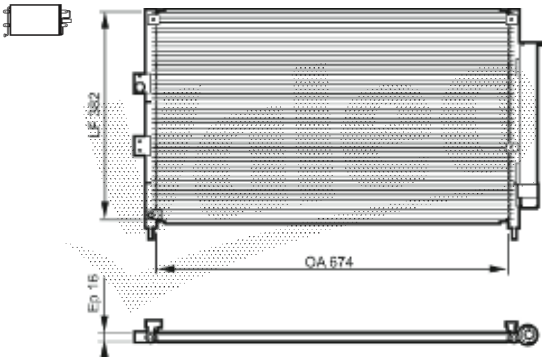

HONDA — 80110SNBA41

Valeo 814221 — 650x343x16

NISSAN — 92110EW80A

Valeo 814218 — 730x378

TOYOTA — 8846042070

Valeo 814223 — 522x311,8x16

TOYOTA — 884600D050

Valeo 814219 — 542x346x16

SUZUKI — 9531051K00

Valeo 814224 — 522x311,8x16

TOYOTA — 884600D060

Valeo 814220 — 446x391x16

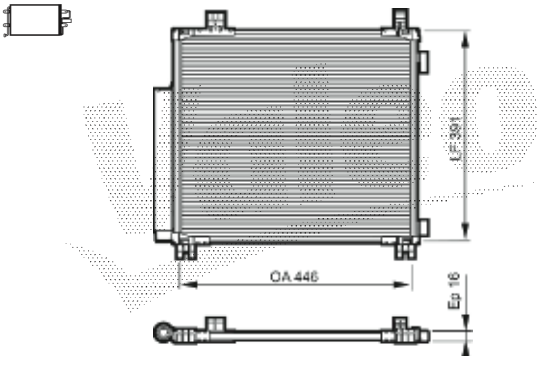

TOYOTA — 8846074010

Valeo 814225 — 650x343x16

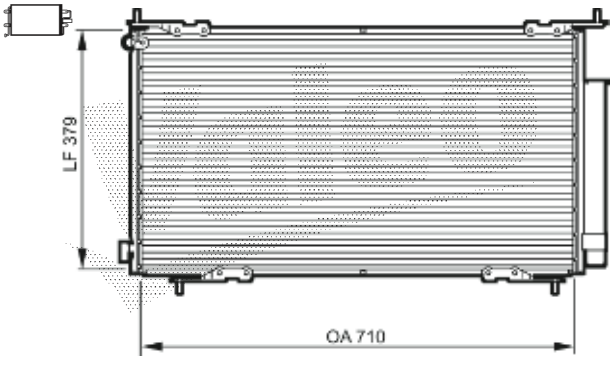

HONDA — 80110S9A003

Valeo 814226 — 679x332,69x16

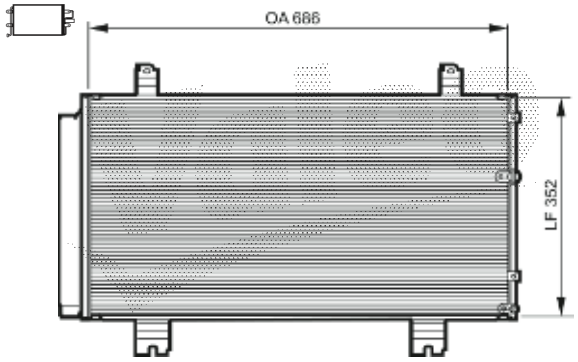

LEXUS — 8846053030

Valeo 814227 — 594x332,69x16

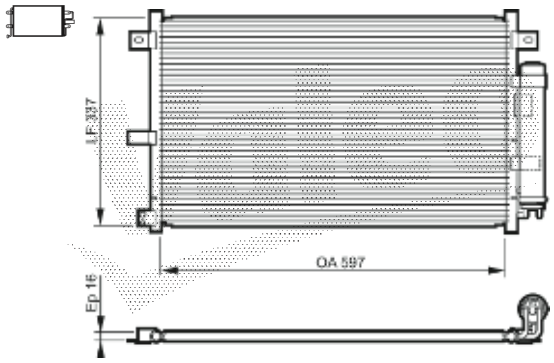

MAZDA — NE5161480C

Valeo 814228 — 668x423,95x16

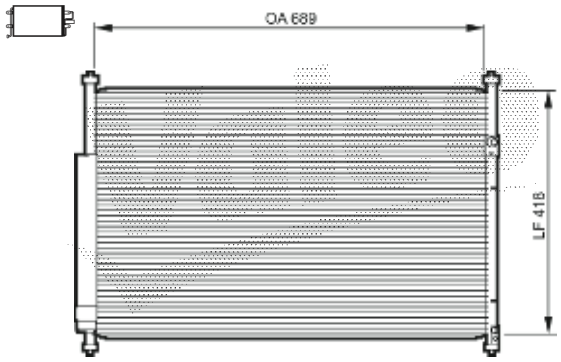

SUZUKI — 9531064J00

Valeo 814230 — 630x478,4x16

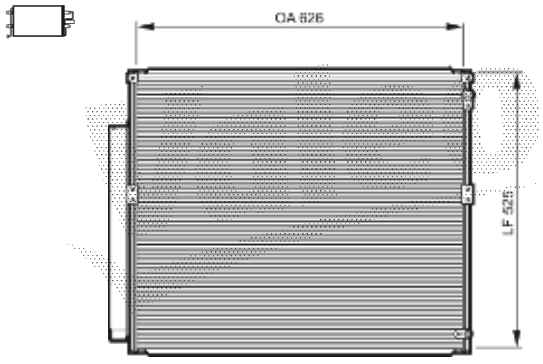

TOYOTA — 8846160091

Valeo 814231 — 644x409,8x16

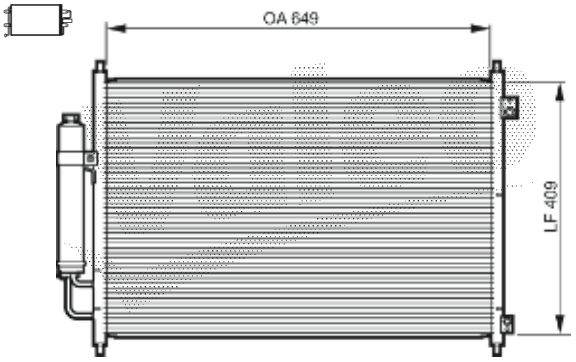

NISSAN — 92100JG000

Valeo 814232 — 406x378x16

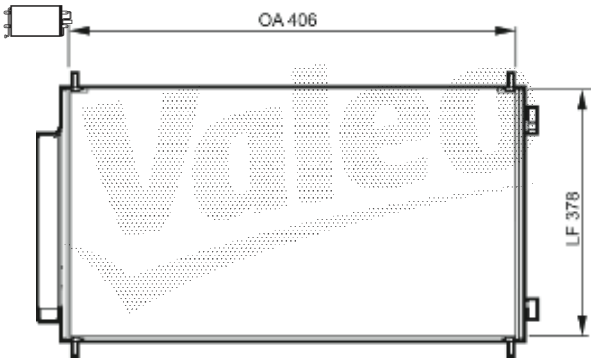

HONDA — 80110SWAA01

Valeo 814233 — 545x311,8x16

TOYOTA — 8846052110

Valeo 814234 — 626x370,6x16

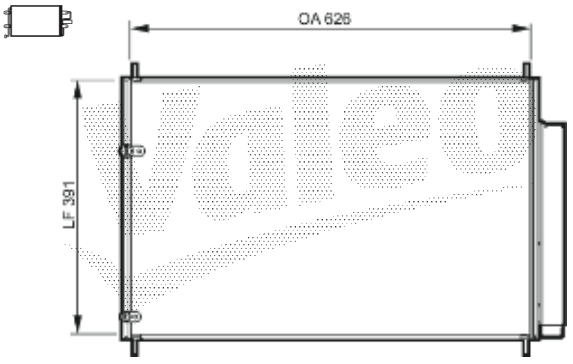

TOYOTA — 8845012280

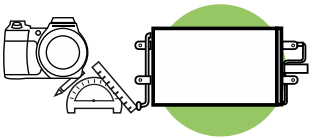

Valeo 814235 — 675x397x16

MAZDA — EH4461480A

Valeo 814239 — 670x465x16

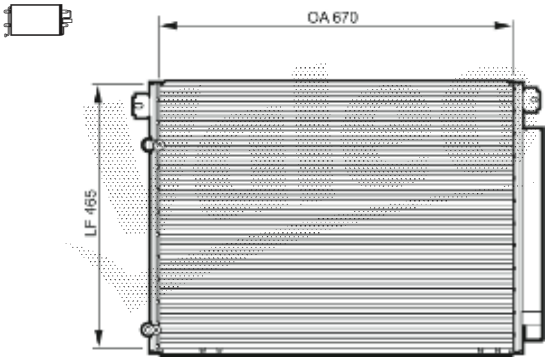

MAZDA — LD4761480A

Valeo 814236 — 628x503x16

TOYOTA — 8846135160

Valeo 814240 — 624x318x16

MITSUBISHI — MB657967

Valeo 814237 — 534x322,55x16

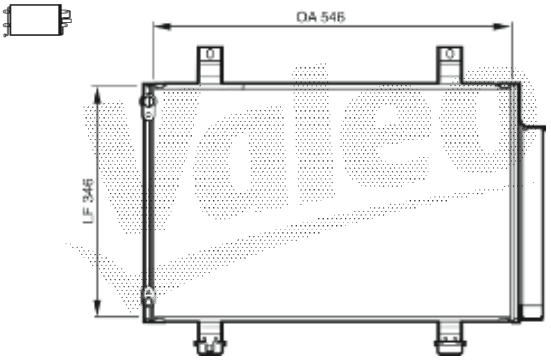

SUZUKI — 9531063J00

Valeo 814241 — 335x388x16

HONDA — 80110SAA003

Valeo 814238 — 653x363,11x16

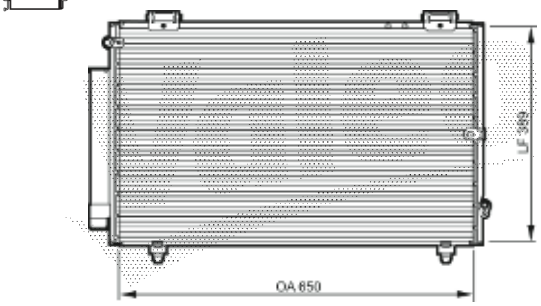

TOYOTA — 8846012540

Valeo 814242 — 656x358x16

HONDA — 80110SEA003

Valeo 814243 — 610x358x16

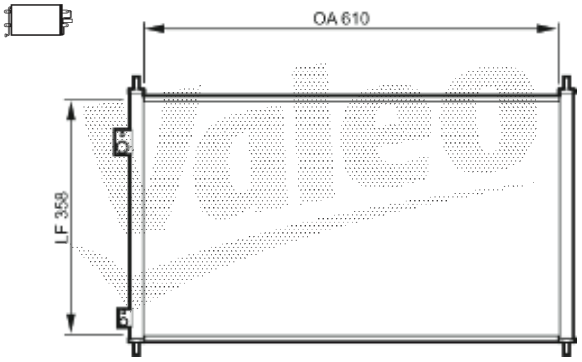

HONDA — 80110S5A003

Valeo 814244 — 446x353x26

SUZUKI — 9531067A50

Valeo 814245 — 540x268

TOYOTA — 8846035130

Valeo 814246 — 690x336x22

TOYOTA — 8846005010

Valeo 814247 — 725x404x22

TOYOTA — 8846006061

Valeo 814248 — 685x336

TOYOTA — 8846012460

Valeo 814251 — 552x338x16

MAZDA — GA5R61480A

Valeo 814252 — 697x328

NISSAN — 92101G9800

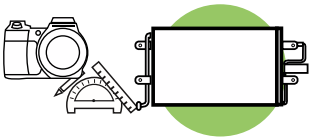

Valeo 814253 — 612x278x16

MAZDA	B01W61480F

Valeo 814257 — 609x308x16

MAZDA	BC1M61480A

Valeo 814254 — 544x308x16

MAZDA	GA7H61480

Valeo 814258 — 298x328x16

MAZDA	D20161480B

Valeo 814255 — 544x318x16

HYUNDAI	9760622050
HYUNDAI	9760622051

Valeo 814259 — 698x298x16

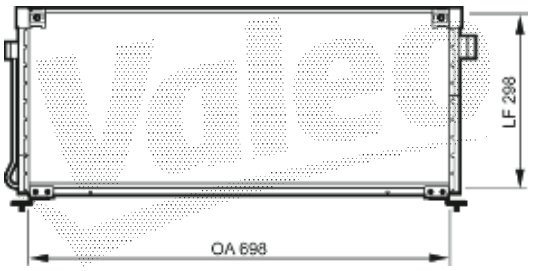

SUBARU	73210AC021

Valeo 814256 — 698x368

NISSAN	921100L710

Valeo 814260 — 651x328x16

MITSUBISHI	MR513005

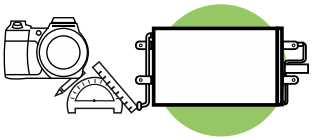

Valeo 814261 — 729x428x16

TOYOTA — 8846028550

Valeo 814262 — 710x428x16

MITSUBISHI — MR996738

Valeo 814263 — 610x368

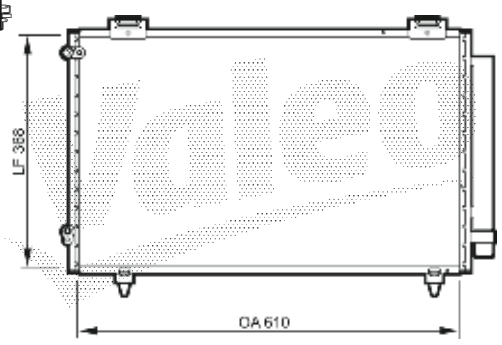

TOYOTA — 8845002170

Valeo 814264 — 576x358x16

HYUNDAI — 976062D000

Valeo 814265 — 600x378x16

MAZDA — BP4K61480B

Valeo 814266 — 634x438x16

MAZDA — LD4761480

Valeo 814267 — 668x368x16

HONDA — 80100S7A013

Valeo 814268 — 693x348x16

SUBARU — 73210FC030

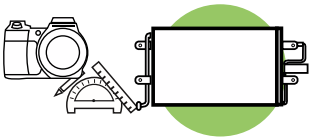

Valeo 814269 — 534x278x16

TOYOTA — 8846035280

Valeo 814270 — 714x408

KIA — OK55261460D

Valeo 814271 — 593,5x360,5x16

TOYOTA — 8845005140

Valeo 814272 — 675x334,4

MITSUBISHI — MN134204

Valeo 814273 — 675x334,4x16

MITSUBISHI — MN151100

Valeo 814274 — 553x331

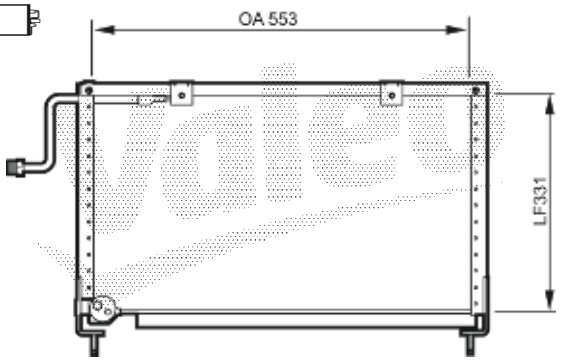

MAZDA — GJ5161480B

Valeo 814275 — 643x289x26

NISSAN — 9211165Y00

Valeo 814276 — 605x310x26

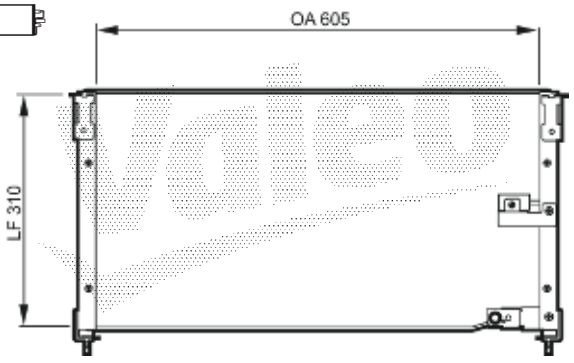

HONDA — 80100SM1A23

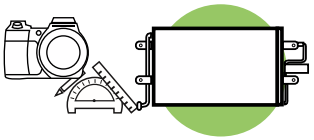

Valeo 814277 — 624x353

DAEWOO 96265216

Valeo 814278 — 548x331

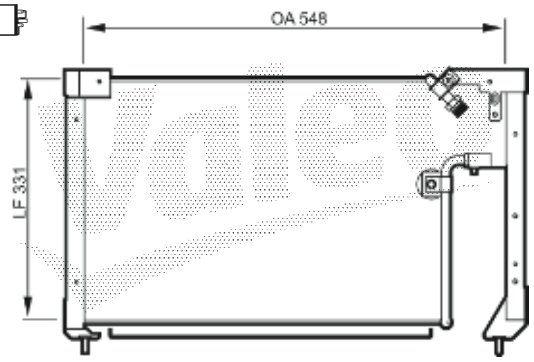

MAZDA BR7061480

Valeo 814279 — 642x310x22

TOYOTA 8846032090

Valeo 814280 — 485x520

TOYOTA 8846160051

Valeo 814281 — 550x330

MAZDA BB7C61480

Valeo 814282 — 687x404x22

TOYOTA 8846033010

Valeo 814283 — 725x404x22

TOYOTA 8846006060

Valeo 814284 — 642x373

NISSAN 9211001G61

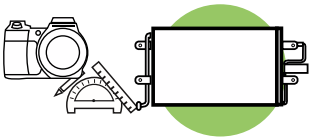

Valeo 814285 — 744x302x22

TOYOTA — 8846042021

Valeo 814289 — 552x388x22

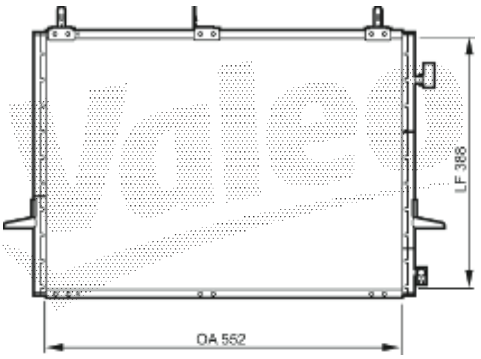

FORD — 7286932

Valeo 814286 — 618x338x16

AUDI — 8A0260403D

Valeo 814290 — 710x388x22

CHRYSLER — 4809129AA

Valeo 814287 — 525x408x16

BMW — 64536914033

Valeo 814291 — 613,5x307x32

AUDI — 893260403

Valeo 814288 — 359x499x48

AUDI — 893260403L

Valeo 814292 — 658x331x22

FIAT — 82471989
LANCIA — 82471989

Valeo 814293 — 488x387x22

ALFA ROMEO	82487879
LANCIA	82487879

Valeo 814300 — 554x288x16

NISSAN	9211050B00

Valeo 814295 — 564x307x48

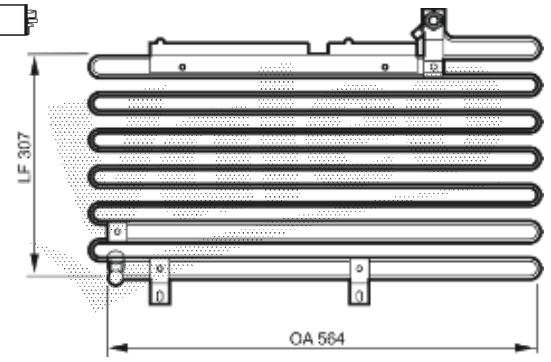

AUDI	443260403F

Valeo 814302 — 563x318

HONDA	80110SV1A11

Valeo 814296 — 359x499x48

AUDI	8A0260403AC

Valeo 814303 — 622x288

MITSUBISHI	MR218428

Valeo 814298 — 687x319

TOYOTA	8846002050

Valeo 814304 — 698x318x16

NISSAN	921103S401
NISSAN	92110VJ200

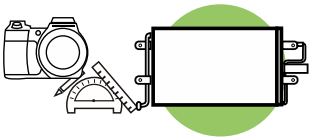

Valeo 814305 — 563x278x16

SUZUKI — 9531060G41

Valeo 814309 — 494x318

TOYOTA — 8846052040

Valeo 814306 — 695x328x16

SUBARU — 73210FC000

Valeo 814310 — 714x388x16

LEXUS — 8846050120

Valeo 814307 — 489x308x16

TOYOTA — 8846052010

Valeo 814311 — 698x368x16

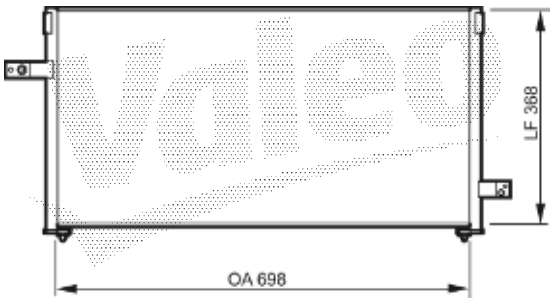

SUBARU — 73210FC050

Valeo 814308 — 534x278x16

TOYOTA — 8846035200

Valeo 814312 — 649x358

SUBARU — 73210SA011

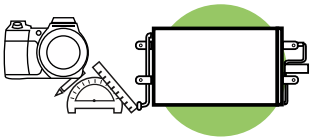

814314 606x293,5x16

SUBARU	73210AG000

814315 616x407,4x16

CITROËN	6455FA
HONDA	80110SMGE02
MITSUBISHI	7812A030
MITSUBISHI	7812A204
PEUGEOT	6455FA

814316 414x338x16

MAZDA	CB0561480B

814317 603x307x22

SAAB	4382396

814326

HONDA	80110SO1A11

814327 527x272

SUZUKI	9531060EM1

814328

NISSAN	92100BM400

814330 636x302

SUZUKI	9531054G01

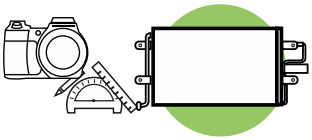

Valeo 814331

NISSAN	921009H21A

Valeo 814345 556x353

KIA	976062F000

Valeo 814333 599x323

HONDA	80110SMGE02

Valeo 814346 389x333

KIA	9760607200

Valeo 814341 499x324

HYUNDAI	976061C200

Valeo 814347 586x363

HYUNDAI	976062E000
KIA	976062E000

Valeo 814344 542x415

DAEWOO	96539634

Valeo 814350 608x342

HYUNDAI	976061E000

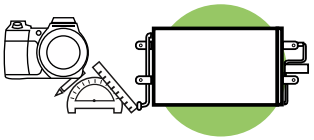

814351 563x396

HYUNDAI	976062H000

814352 550x434

KIA	976063E600

814353 674x414

HYUNDAI	976062B000

814354 434x343

HYUNDAI	976060X000

814357 540x353

SEAT	1J0820413H
VOLKSWAGEN	1J0820413H

814358 494x303

CHEVROLET	96591582

814359 636x396

OPEL	4806936
VAUXHALL	96805196

814360 577x466

FORD	1481851

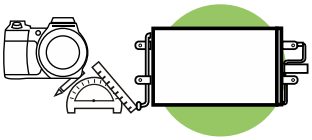

Valeo 814362 — 654x383

HYUNDAI	976061R000

Valeo 814363 — 574x361x12

CITROËN	6455HV
PEUGEOT	6455HV

Valeo 814364

AUDI	6R0820411G
AUDI	6R0820411J
SEAT	6R0820411D

Valeo 814365 — 574x361x12

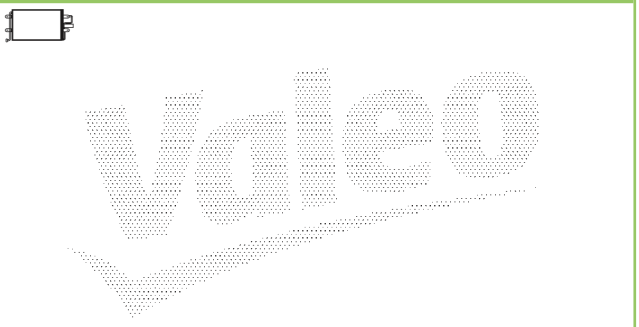

PEUGEOT	6455JA

Valeo 814366 — 590x361x12

CITROËN	6455HS
CITROËN	6455ES
FIAT	1400836980
LANCIA	1440143080
PEUGEOT	6455HS
PEUGEOT	6455ES

Valeo 814367 — 628x461x12

BMW	64509239992
BMW	64536972553

Valeo 814368 — 628x371x12

MERCEDES	2035001654

Valeo 814369

VOLKSWAGEN	5C0820411

Valeo 814370 — 678x341x12

AUDI	8K0260403AB
AUDI	8K0260403M
AUDI	8K0260403E

Valeo 816852 — 690x462x16

CA006

CITROËN	6455Y3
FIAT	1486721080
LANCIA	1486721080
PEUGEOT	6455Y3

Valeo 816803 — 555x351x16

CA1014

CITROËN	6453V5

Valeo 816863 — 430x376x22

CA1007

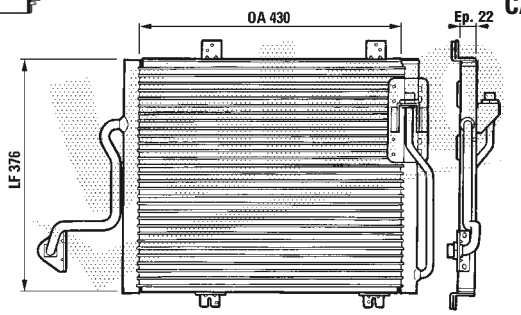

RENAULT	7700272488

Valeo 816839 — 540x391x16

CA1004

RENAULT	7701204731

Valeo 816865 — 530x437x16

CA1002

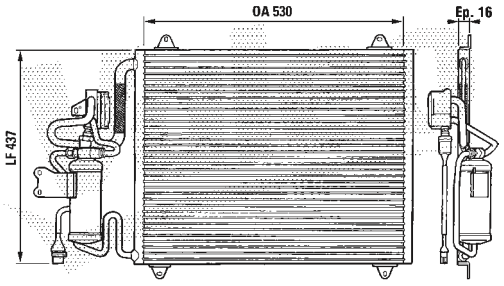

RENAULT	7701039742

Valeo 816850 — 552x352x16

CA004

CITROËN	6455Y6
PEUGEOT	6455Y6

Valeo 816866 — 610x278x22

CA1013

RENAULT	7700840853

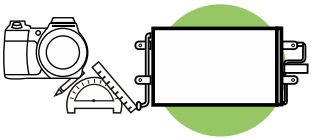

Valeo 816867 — 558x391x25

RENAULT	7700876215
RENAULT	7701038227

Valeo 816908 — 550x350x25

SEAT	6K0820413B
VOLKSWAGEN	6K0820413B

Valeo 816891 — 630x376x16

CA1031

MERCEDES	9015000554

Valeo 816910 — 548x361x16

VOLKSWAGEN	1H0820413

Valeo 816900 — 570x400x16

MERCEDES	2028300870

Valeo 816912 — 520x388x22

CA1115

RENAULT	7700432391

Valeo 816902 — 600x305x20

CA1197

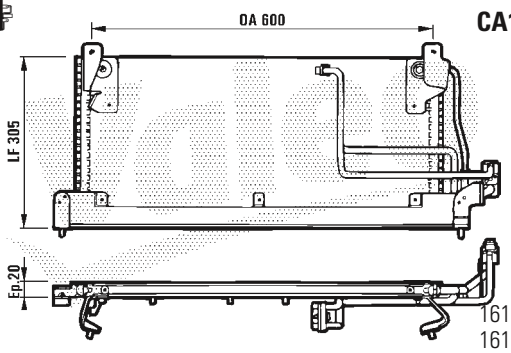

OPEL	1618081
OPEL	1618108
VAUXHALL	90511659
VAUXHALL	93250611

Valeo 816921 — 570x294x16

CA1011

ROVER	JRB100310

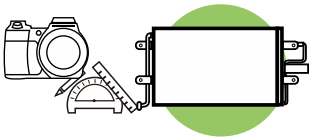

Valeo 816922 — 458x421x16

BMW	64538373924

Valeo 816962 — 759x406x23

RENAULT TRUCKS	5000752789

Valeo 816924 — 600x274x20

CA1202

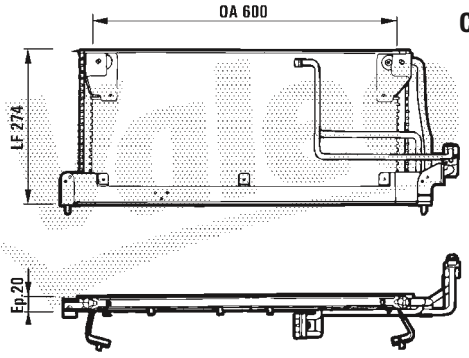

OPEL	1618109
VAUXHALL	90541114

Valeo 816964 — 542x312x25

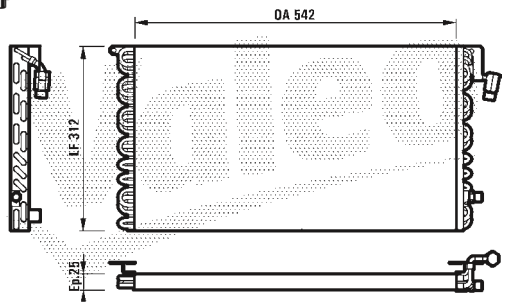

CITROËN	6455V0

Valeo 816948 — 544x366x20

CA1195

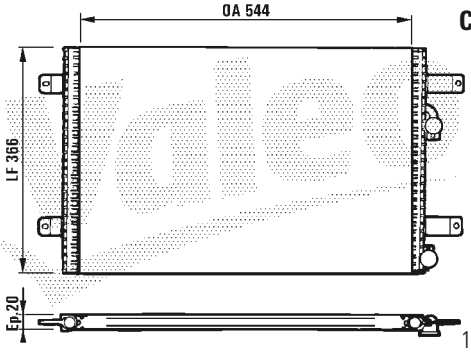

FORD	1029057
SEAT	7M0820413F
VOLKSWAGEN	7M0820413F

Valeo 816967 — 575x421x25

AUDI	8D0260403C
AUDI	8D0260403H
VOLKSWAGEN	8D0260403H

Valeo 816949 — 580x330x20

CA1192

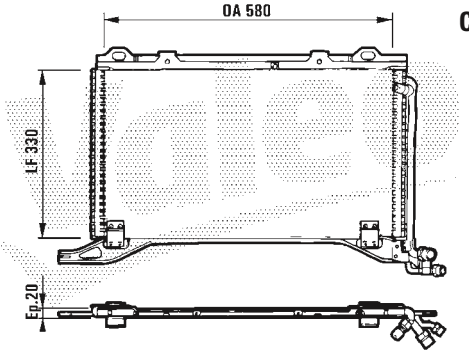

MERCEDES	2018300370

Valeo 816973 — 549x352

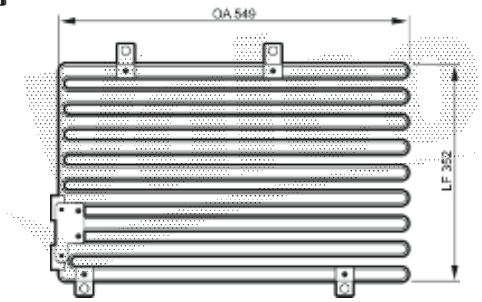

ALFA ROMEO	60610662
ALFA ROMEO	60630383
ALFA ROMEO	60807597

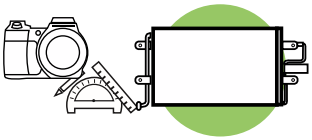

816977 — 540x312x25

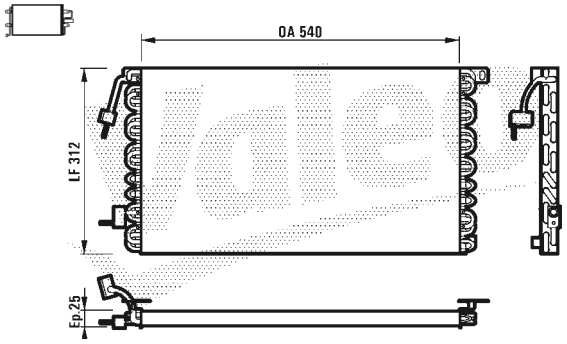

PEUGEOT 6455V5

816991 — 660x380

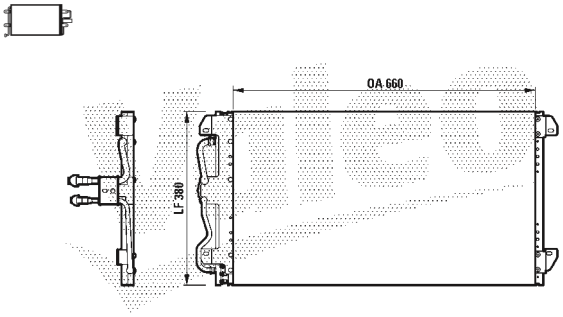

CHRYSLER 5011395AA

816980 — 590x462x16

CA2001

RENAULT TRUCKS 5010230214
RENAULT TRUCKS 5010315281

817011 — 490x550x25

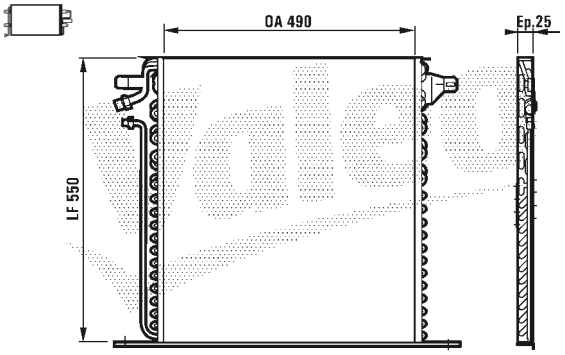

MERCEDES 6388350170

816981 — 572x447x21

CA1190

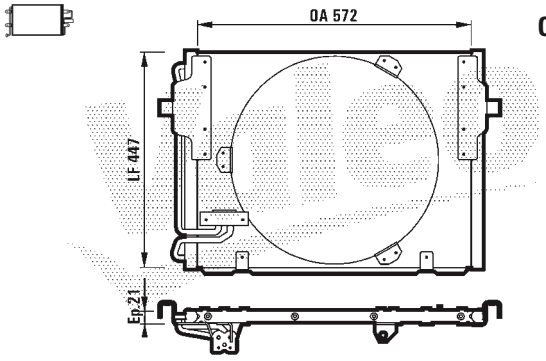

BMW 64531392941

817015 — 635x356x25

CHRYSLER 4644365

816985 — 500x364x16

CA1092

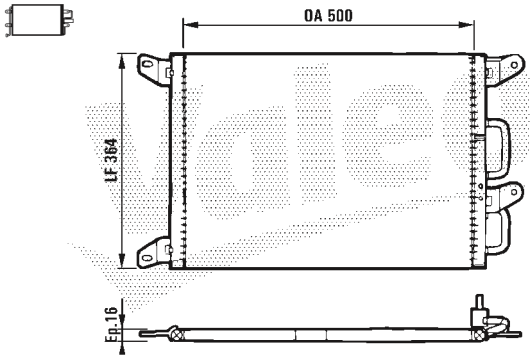

FIAT 46440250

817022 — 565x444x22

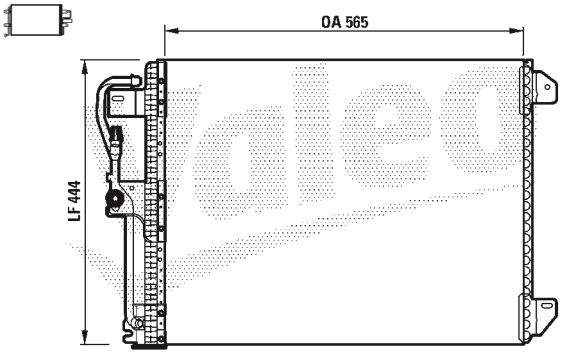

JEEP 55115863

Valeo 817023 — 565x444x25

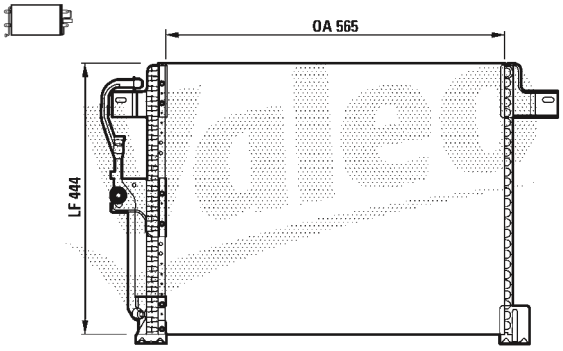

JEEP 55115864

Valeo 817024 — 550x350x25

VOLKSWAGEN 1HM820413B

Valeo 817042 — 630x339x16

CA1093

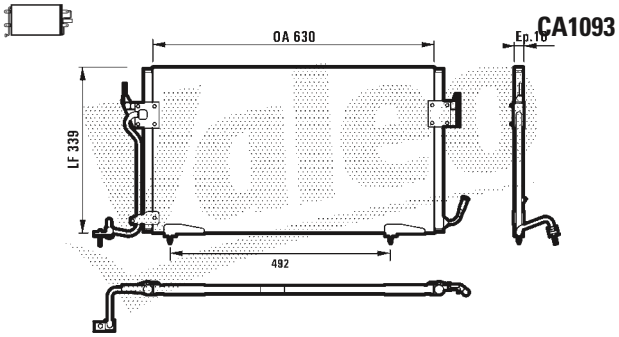

CITROËN 6455Y2
PEUGEOT 6455Y2

Valeo 817065 — 690x376x16

CA1029

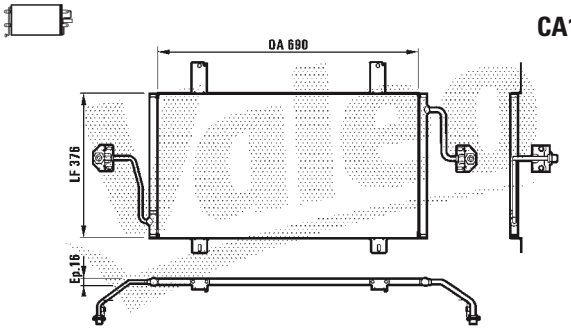

RENAULT 7701044406

Valeo 817067 — 510x437x16

CA1423

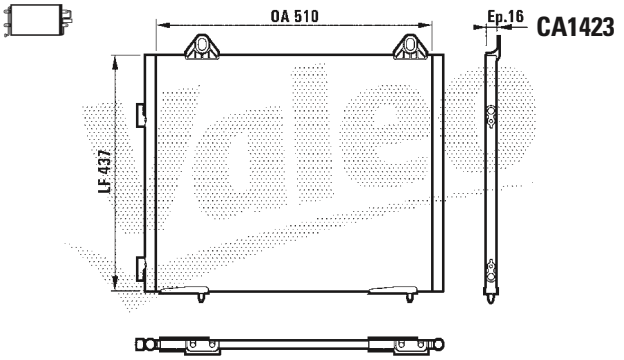

LAND ROVER AWR5796

Valeo 817073 — 686x457x25

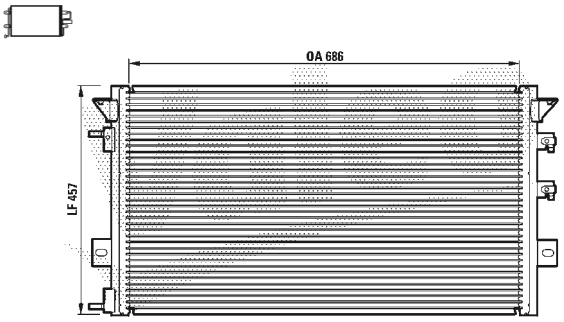

CHRYSLER 4662589

Valeo 817074 — 660x127x26

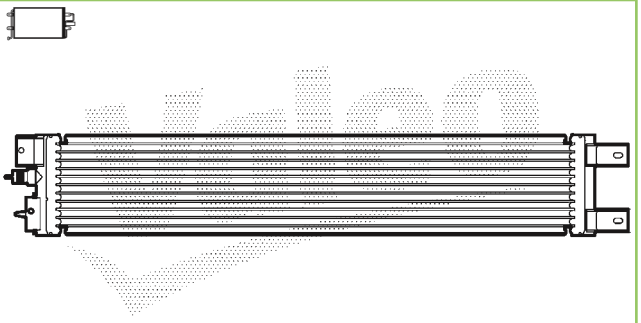

CHRYSLER 4682591

Valeo 817075 — 675x364x22

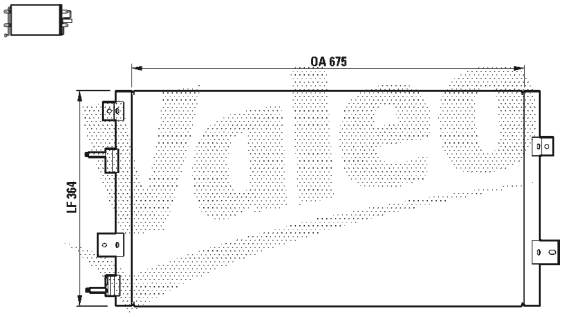

CHRYSLER 4758305

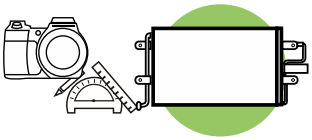

Valeo 817171 — 510x376x16

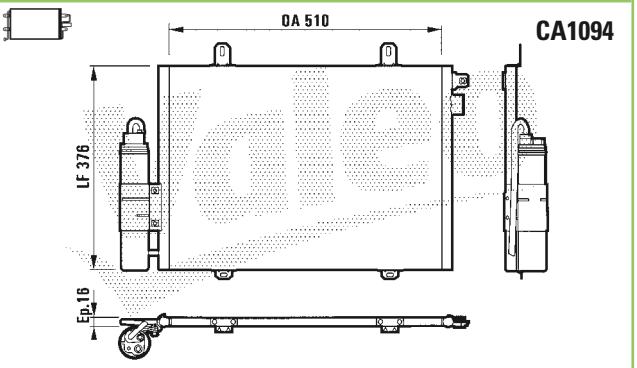

CA1094

RENAULT	7700414103

Valeo 817197 — 534x388x16

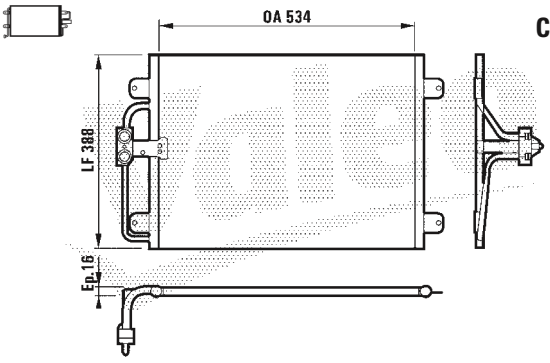

CA1247

RENAULT	7700432392

Valeo 817225 — 448x381x22

FORD	1061104

Valeo 817229 — 628x341x16

CITROËN	6455AW
PEUGEOT	6455AW

Valeo 817230 — 568x341x16

CITROËN	6455AV
CITROËN	6455Q9
PEUGEOT	6455AV
PEUGEOT	6455Q9

Valeo 817232 — 558x391x20

FORD	1022553
FORD	1060440
FORD	1078378
FORD	1091719

Valeo 817235 — 600x319x21

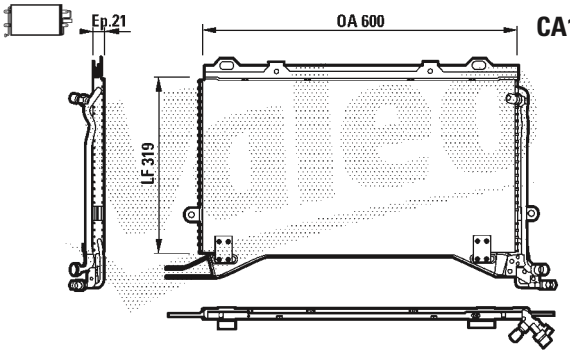

CA1191

MERCEDES	2108300470

Valeo 817244 — 548x361x16

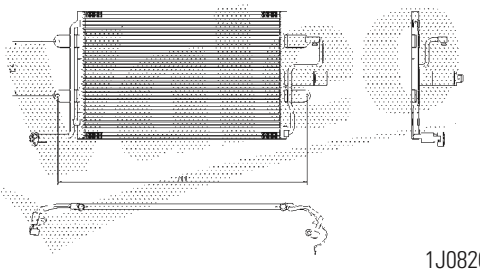

CA1206

AUDI	1J0820413N
SEAT	1J0820413N
SKODA	1J0820413N
VOLKSWAGEN	1J0820413N

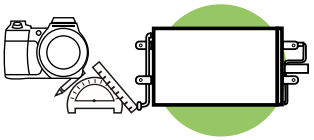

Valeo 817245 — 588x361x22

CA1209

SEAT	6K0820411
SEAT	6K0820411A

Valeo 817246 — 390x369x20

CA1207

SEAT	6X0820413
VOLKSWAGEN	6X0820413

Valeo 817247 — 390x369x20

CA1208

SEAT	6X0820413A
VOLKSWAGEN	6X0820413A

Valeo 817248 — 458x421x16

BMW	64538391647

Valeo 817252 — 620x481x16

MERCEDES	2108300570

Valeo 817253 — 694x301x16

NISSAN	921102F000

Valeo 817283 — 556x364x16

CA1424

PEUGEOT	6455X9
PEUGEOT	6455Y0

Valeo 817288 — 616x462x16

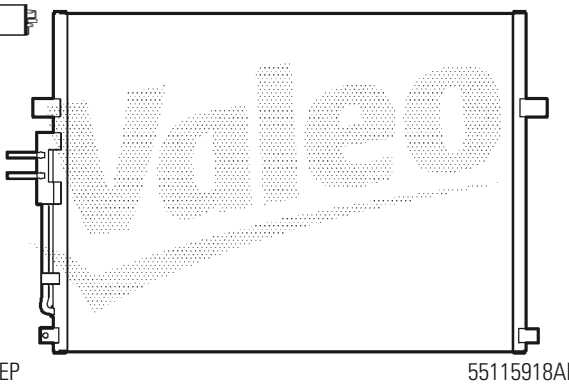

JEEP	55115918AB
JEEP	55115918AC

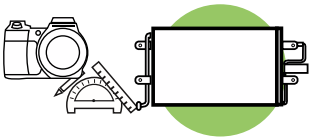

Valeo

Valeo 817375 650x376x16

CA1418

PEUGEOT 6453JA

Valeo 817385 574x315x16

CA1261

FIAT 46829340

Valeo 817379 510x437x16

CA1108

RENAULT TRUCKS 5010382644

Valeo 817386 540x351x16

CA1262

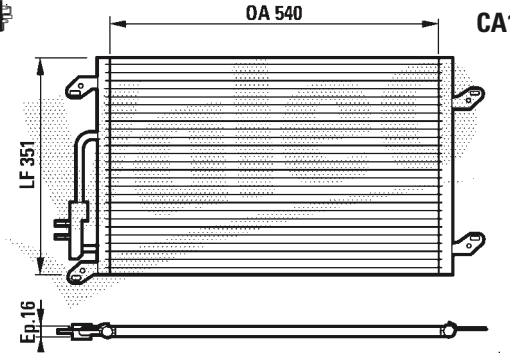

LANCIA 46459581

Valeo 817383 565x421x16

BMW 64538377614

Valeo 817405 518x311x16

BMW 64538377648

Valeo 817384 490x327x16

CA1120

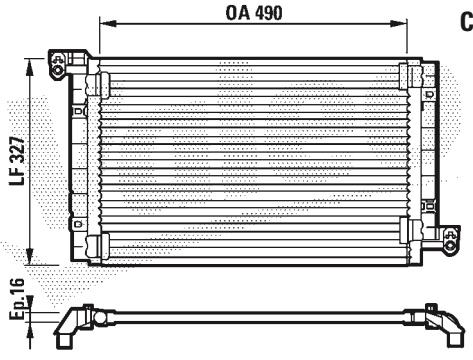

FIAT 46754752

Valeo 817406 499x421x25

BMW 64538378439

Valeo 817427 — 548x361x16

VOLKSWAGEN — 1C0820413A

Valeo 817458 — 518x531x16

MERCEDES — 1638300170

Valeo 817428 — 514x376x16

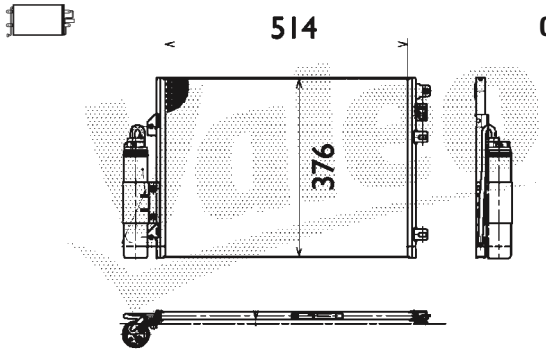

CA1246

RENAULT — 8200106950

Valeo 817463 — 574x339x16

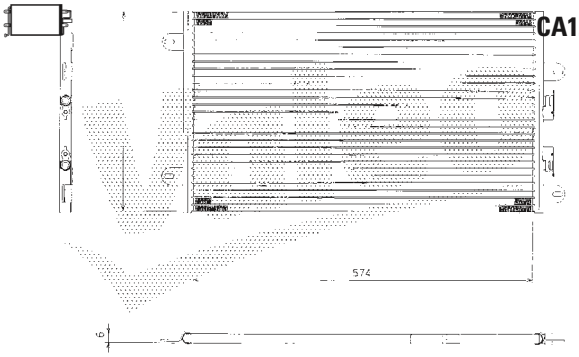

CA1241

ALFA ROMEO — 46768973

Valeo 817445 — 528x355x22

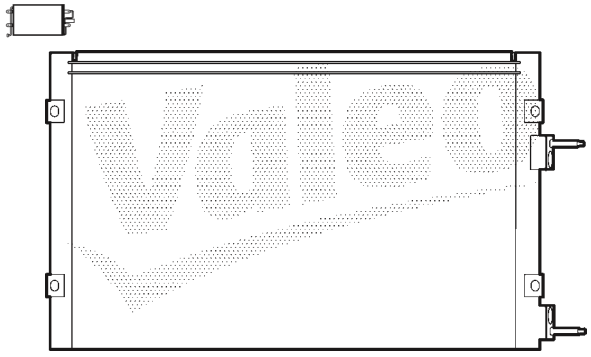

CHRYSLER — 5017405

Valeo 817464 — 516x360x16

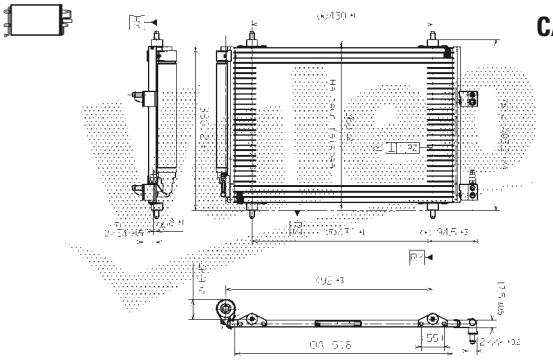

CA1321

CITROËN — 6453FH

Valeo 817446 — 535x521x16

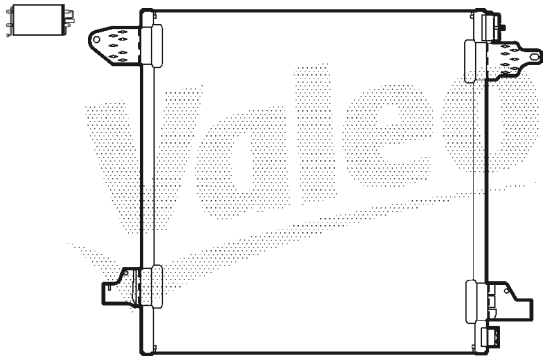

MERCEDES — 1638300370

Valeo 817465 — 518x367x16

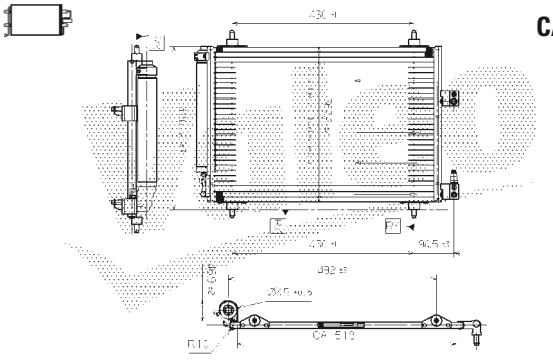

CA1269

CITROËN — 6453FP

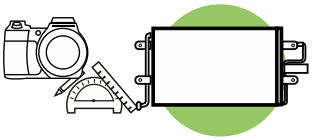

Valeo 817475 — 674x392x22

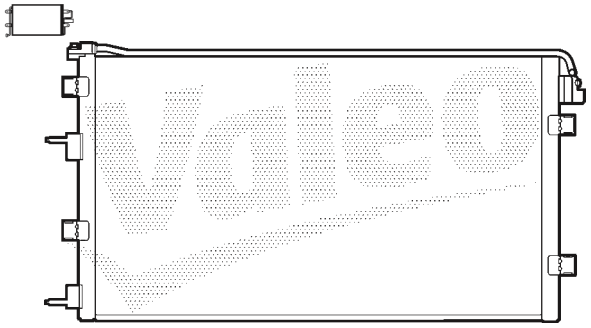

CHRYSLER	5017621

Valeo 817504 — 538x381x16

MERCEDES	1685000454

Valeo 817477 — 724x326x27

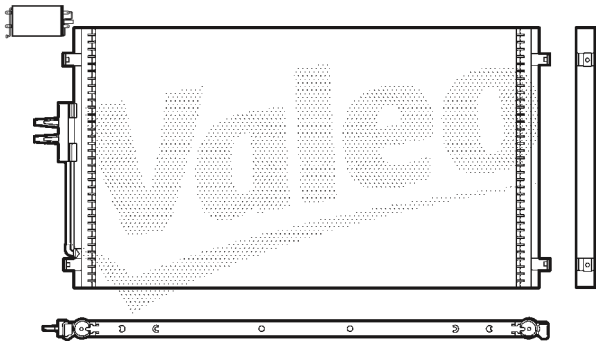

CHRYSLER	4809227AD

Valeo 817505 — 548x381x16

OPEL	1850074
VAUXHALL	93170621

Valeo 817492 — 595x411x16

MERCEDES	2028300770

Valeo 817506 — 414x371x16

OPEL	1850078
VAUXHALL	93170622

Valeo 817493 — 628x361x16

FORD	1086534
FORD	1136949

Valeo 817507 — 506x328x21

SAAB	4634937

817508 — 518x364x16

CA1437

CITROËN	6455CV
PEUGEOT	6455CV

817527 — 568x341x16

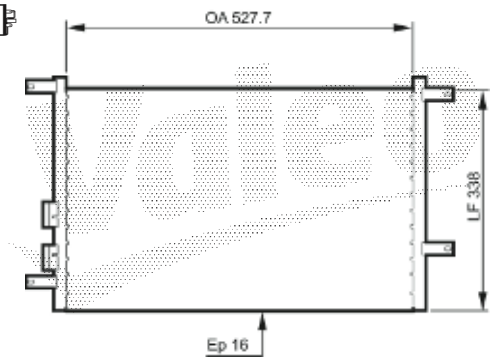

ALFA ROMEO	46790658

817509 — 538x381x16

RENAULT	7700434383

817547 — 590x315x16

CA1254

MINI	64531490572

817524 — 518x367x16

CA1322

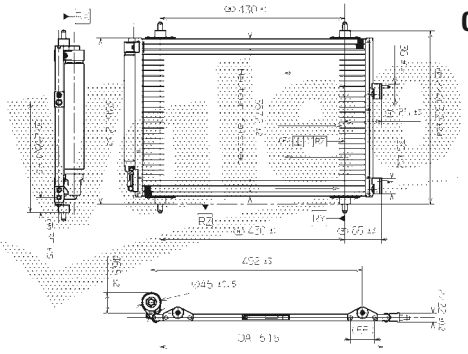

PEUGEOT	6455AA

817549 — 625x313x16

CA1423

LAND ROVER	JRB101070

817526 — 518x368x16

CA1255

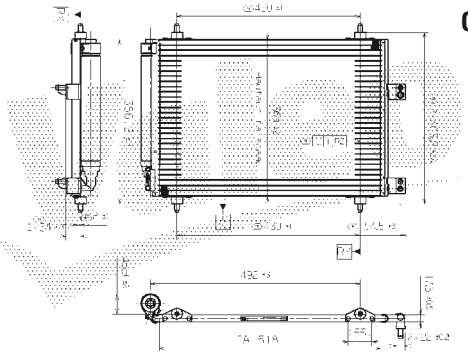

PEUGEOT	6455AC

817559 — 608x351x16

VOLVO	30871579

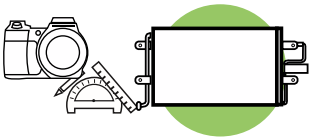

Valeo 817560 608x351x16

VOLVO 30897260

Valeo 817561 588x321x16

BMW 64538375513

Valeo 817562 595x411x16

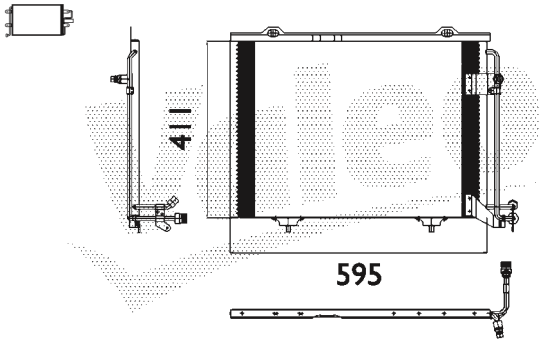

MERCEDES 2028300970

Valeo 817563 595x411x16

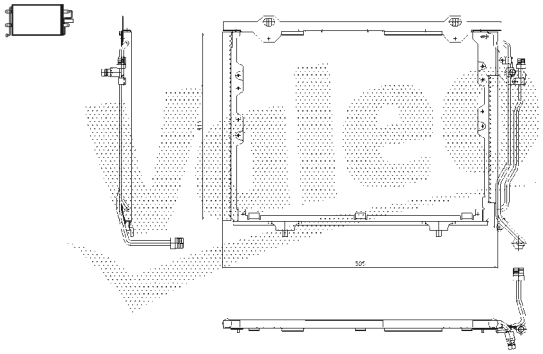

MERCEDES 2028301070

Valeo 817567 669x361x16

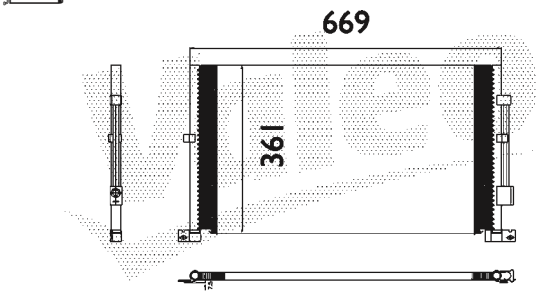

FORD 1142333
FORD 1232914

Valeo 817568 698x391x16

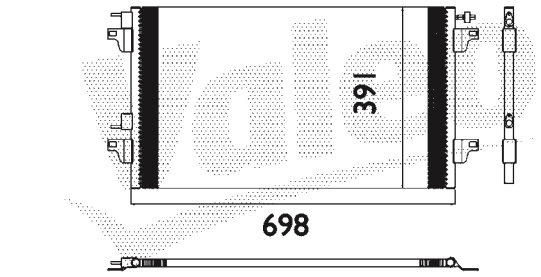

RENAULT 8200008763
RENAULT 8200152728

Valeo 817569 608x401x16

AUDI 8E0260403B

Valeo 817570 508x401x16

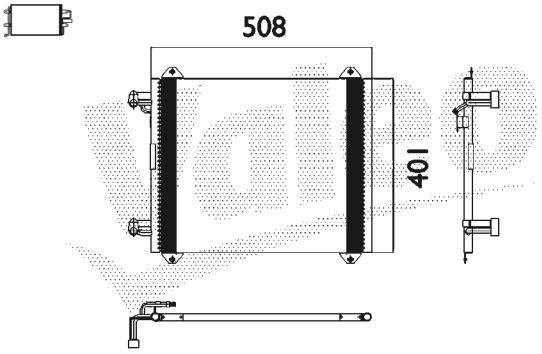

AUDI 8Z0260403D

Valeo 817575 — 498x391x16

BMW	64536914216

Valeo 817577 — 574x437x16

CA1113

OPEL	4408646
RENAULT	7700312901
VAUXHALL	91166018

Valeo 817579 — 560x450x16

CA1256

CITROËN	6455AP
FIAT	1489398080
LANCIA	1489398080
PEUGEOT	6455AP

Valeo 817582 — 744x437x18

CA1245

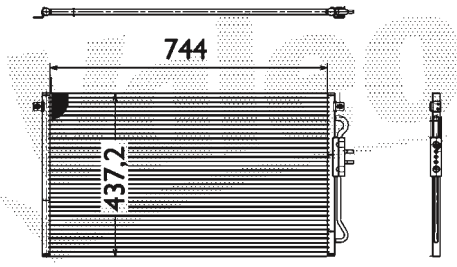

CHRYSLER	5072262AA

Valeo 817601 — 690x376x16

CA1439

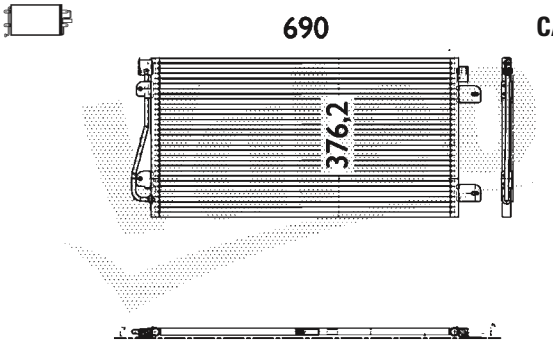

RENAULT	7701049665

Valeo 817602 — 510x380x16

CA1257

RENAULT	7700436062

Valeo 817603 — 694x301x16

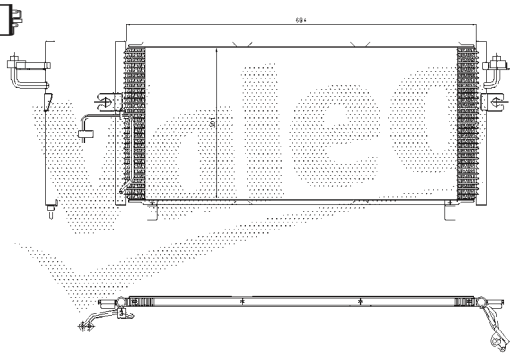

NISSAN	921109F515

Valeo 817607 — 458x421x16

BMW	64538378438

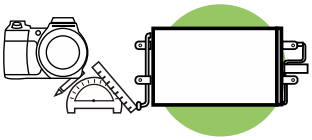

Valeo 817608 — 615x396x16

CA1507

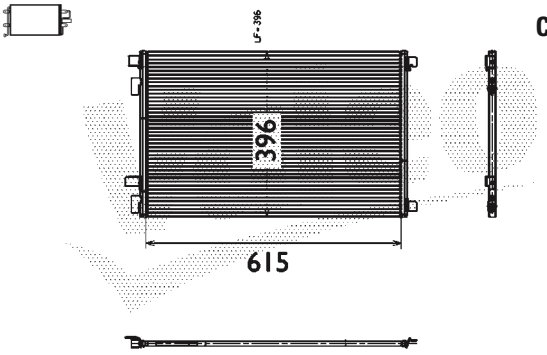

RENAULT	8200115543

Valeo 817609 — 548x381x16

OPEL	1850091
VAUXHALL	93175776

Valeo 817610 — 550x265x16

OPEL	1850090

Valeo 817644 — 573x442x16

CA1117

OPEL	4414387
RENAULT	8200073912
VAUXHALL	91168643

Valeo 817645 — 658x411x16

CA1421

RENAULT	8200019382

Valeo 817646 — 587x405x16

CA1474

RENAULT	8200245598

Valeo 817647 — 658x411x16

CA1258

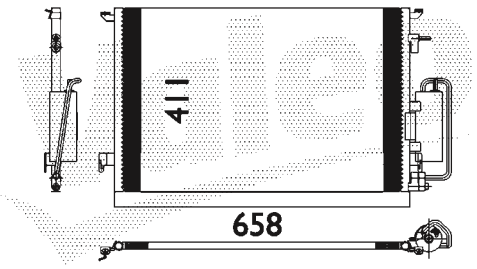

OPEL	1850076
VAUXHALL	24418362

Valeo 817648 — 658x411x16

CA1263

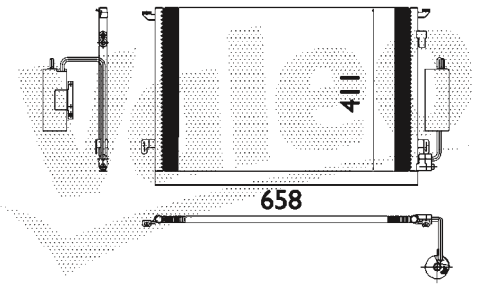

OPEL	1850077
VAUXHALL	24418363

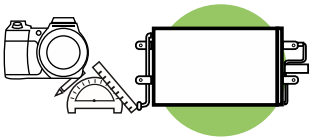

Valeo 817655 — 588x321x16

CITROËN	6455Z1

Valeo 817662 — 550x380x16

CA1473

RENAULT	8200221131

Valeo 817657 — 628x361x17

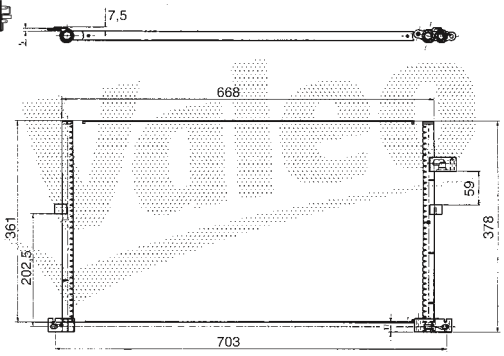

FORD	1152429
FORD	1311098

Valeo 817664 — 538x361x16

FORD	1146195
FORD	1333713

Valeo 817659 — 538x381x16

MERCEDES	1685000854
MERCEDES	1685001154

Valeo 817665 — 598x391x16

AUDI	4B0260403R

Valeo 817661 — 550x380x16

CA1472

RENAULT	8200221132

Valeo 817666 — 618x421x16

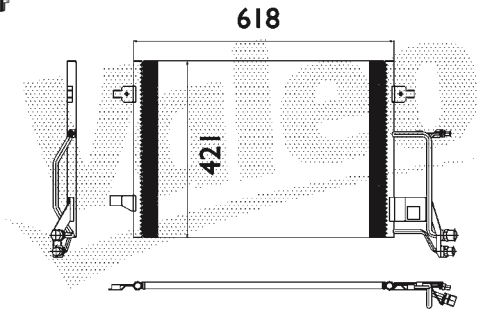

AUDI	4B0260403T

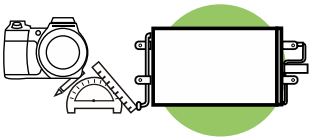

Valeo 817667 — 518x361x16

CITROËN	6455CQ
PEUGEOT	6455AS
PEUGEOT	6455CQ

Valeo 817668 — 712x364x16

CA1416

CITROËN	6455AQ
FIAT	1489257080
LANCIA	1489257080
PEUGEOT	6455AQ

Valeo 817669 — 534x341x16

FIAT	46745840

Valeo 817670 — 510x370x16

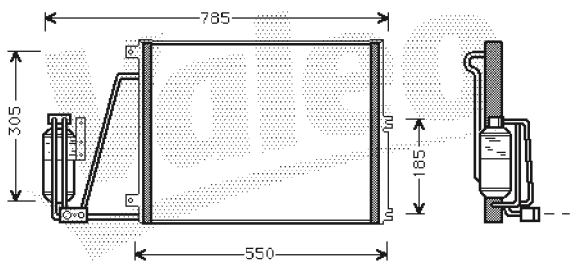

OPEL	1850051
VAUXHALL	52484484

Valeo 817674 — 488x341x17

TOYOTA	8846052020

Valeo 817675 — 578x391x16

VOLVO	9171271

Valeo 817679 — 618x421x16

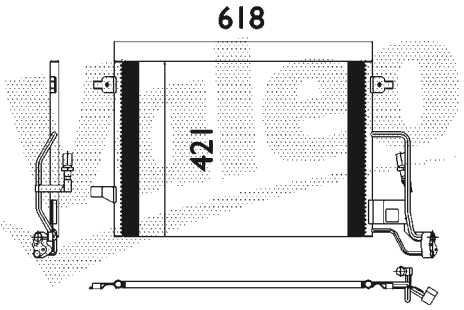

VOLKSWAGEN	3B0260401

Valeo 817684 — 574x311x16

FIAT	46788049

Valeo 817685 — 498x311x16

FIAT	46788052

Valeo 817686 — 468x361x16

SEAT	6Q0820411J
SKODA	6Q0820411E/H
SKODA	6Q0820411J
VOLKSWAGEN	6Q0820411J

Valeo 817687 — 504x340x16

CA1431

RENAULT	8200137650

Valeo 817689 — 694x381x16

CA1440

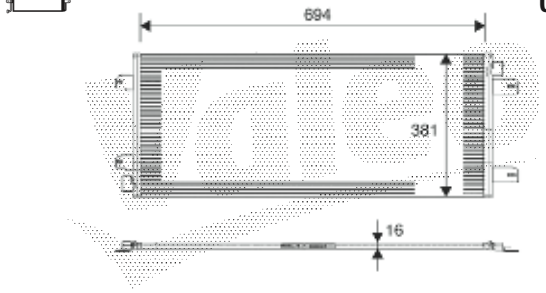

OPEL	4401424
RENAULT	7701057122
VAUXHALL	9109424

Valeo 817701 — 538x388x16

CA1426

DACIA	8200182361
RENAULT	8200182361

Valeo 817703 — 571x315x16

CA1464

FIAT	51712975
FIAT	51763472

Valeo 817711 — 625x412x16

CA1259

SAAB	12793296

Valeo 817712 — 625x412x16

CA1414

SAAB	12793295

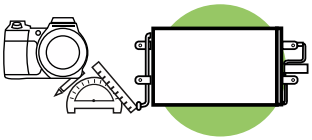

Valeo 817731 — 660x431x16

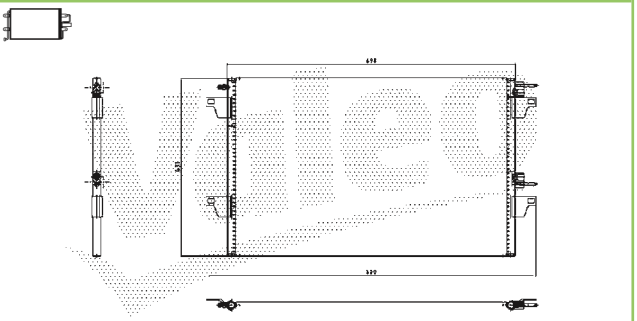

RENAULT	8200033733

Valeo 817741 — 568x401x16

AUDI	8E0260403D

Valeo 817732 — 554x278

NISSAN	921106F600

Valeo 817742 — 690x376x16

CA1413

NISSAN	27650000QAF
RENAULT	7701052120

Valeo 817739 — 744x437x16

CA1476

CHRYSLER	5142490AA

Valeo 817777 — 584x401x16

AUDI	1K0820411E/H
SEAT	1K0820411H
SKODA	1K0820411E
VOLKSWAGEN	1K0820411H

Valeo 817740 — 669x303x16

CA1436

CITROËN	6455EA
PEUGEOT	6455EA

Valeo 817780 — 610x348

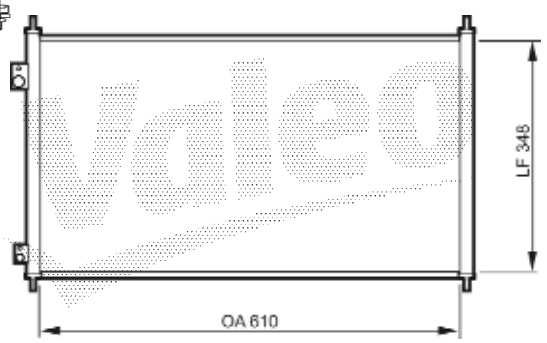

HONDA	80110S6DG01

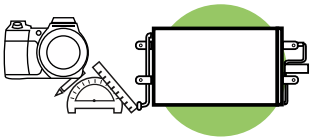

Valeo 817781 — 605x310x16

HONDA	80100SN7E01
ROVER	JRB100180

Valeo 817791 — 686x302

MITSUBISHI	MR460343

Valeo 817783 — 590x358

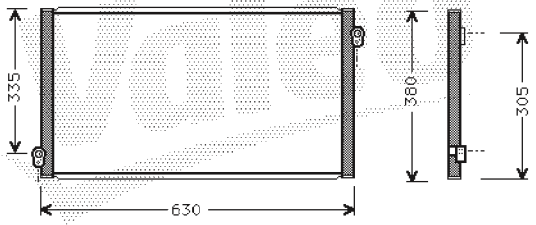

HONDA	80100S84A00
HONDA	80110S1AG01
HONDA	80110S1AG02

Valeo 817792 — 654x268

NISSAN	921102M112

Valeo 817789 — 605x333

MITSUBISHI	MB958166

Valeo 817794 — 654x268

NISSAN	921102M117

Valeo 817790 — 635x478

MITSUBISHI	MN123332
MITSUBISHI	MR513110

Valeo 817798 — 538x361x12

OPEL	1850086
VAUXHALL	13128931

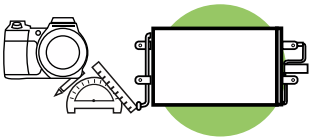

Valeo 817799 — 418x391x18

RENAULT 7700428315
RENAULT 7700433077

Valeo 817805 — 609x368

TOYOTA 8845002150

Valeo 817801 — 380x330x20

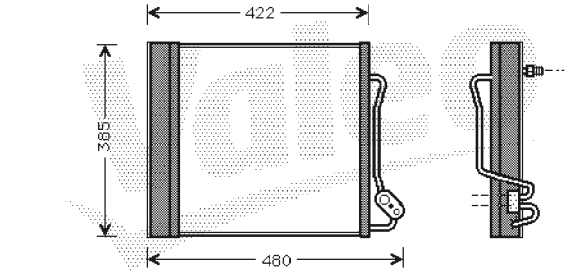

SMART 0001632V003

Valeo 817806 — 538x441x16

VOLKSWAGEN 1T0820411B

Valeo 817802 — 574x308

TOYOTA 8845005010
TOYOTA 8845005070

Valeo 817809 — 619x417x16

CA1443

OPEL 1850095
SAAB 13114943
VAUXHALL 13114943

Valeo 817803 — 574x308x16

TOYOTA 8845005020

Valeo 817818 — 524x344x16

ALFA ROMEO 60668109

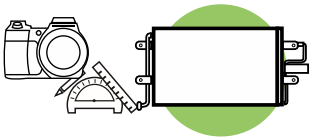

817819 — 694x318

NISSAN	92110BM400
NISSAN	92110BM405

817822 — 692x308

NISSAN	92100BN900

817824 — 560x361x16

CA1542

CITROËN	6455CP
PEUGEOT	6455CP

817827 — 514x377x16

CA1351

DACIA	8200241088

817836 — 621x342

NISSAN	92100AX80B
NISSAN	92100AX800

817837 — 480x361x16

MINI	64536918597

817838 — 740x391x12

AUDI	4L0260401A
PORSCHE	95557311101
VOLKSWAGEN	7L0820411D
VOLKSWAGEN	7L0820411G
VOLKSWAGEN	7L0820411F

817839 — 548x381x16

OPEL	1850096
VAUXHALL	93178958

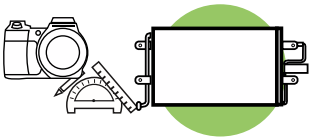

Valeo 817840 — 578x421x19

AUDI	8D0260403G
VOLKSWAGEN	8D0260403G

Valeo 817841 — 538x381x16

MERCEDES	4145000054

Valeo 817842 — 658x391x16

MERCEDES	6398350070

Valeo 817843 — 548x381x16

OPEL	1850092
VAUXHALL	93177215

Valeo 817844 — 548x261x16

OPEL	1850093
VAUXHALL	93177423

Valeo 817846 — 588x381x16

OPEL	1850097
VAUXHALL	93178959

Valeo 817847 — 368x381x16

OPEL	1850099
VAUXHALL	93178961

Valeo 817848 — 648x371x16

MERCEDES	2035000554

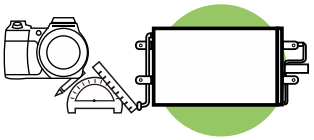

Valeo 817849 — 648x371x16

MERCEDES — 2035000654

Valeo 817853 — 478x401x16

CA1422

OPEL — 1850084
VAUXHALL — 13106817

Valeo 817850 — 588x421x16

BMW — 64508379885

Valeo 817997 — 578x421x16

AUDI — 4B0260403S

Valeo 817851 — 608x381x16

BMW — 64508381362

Valeo 818000 — 556x364x16

CA1481

PEUGEOT — 6455CH

Valeo 817852 — 610x410x16

CA1428

OPEL — 1850083
VAUXHALL — 24418364

Valeo 818001 — 556x364x16

CA1482

PEUGEOT — 6455CJ

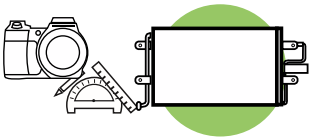

Valeo 818002 — 626x414x12

CA1479

RENAULT	8200325004

Valeo 818003 — 593x437x16

CA1265

MERCEDES	2115001254
MERCEDES	2205000054

Valeo 818004 — 554x363x16

FORD	1108838
SEAT	7M3820411D
VOLKSWAGEN	7M3820411A
VOLKSWAGEN	7M3820411D

Valeo 818005 — 574x315x16

CA1463

FIAT	51767143

Valeo 818006 — 562x310x16

FIAT	46799862

Valeo 818007 — 574x296x22

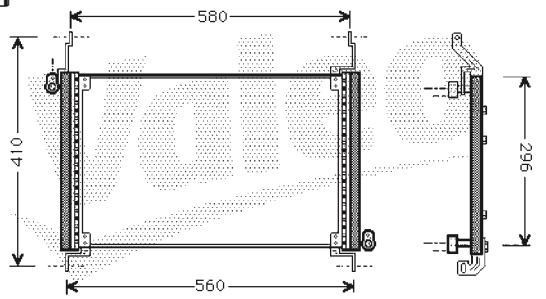

FIAT	46547675

Valeo 818008 — 595x362x16

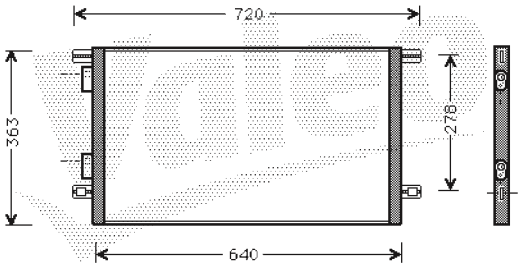

RENAULT	7701045346

Valeo 818009 — 556x310x18

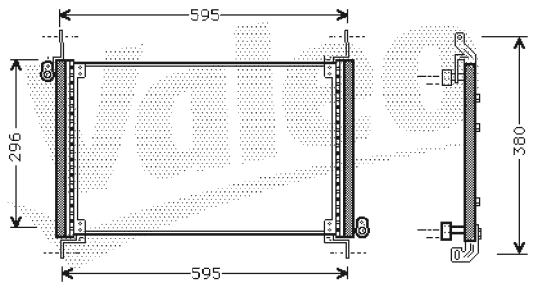

FIAT	46527737

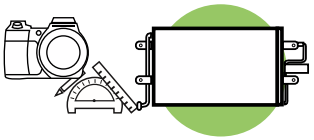

Valeo 818013 — 359x351x16

CA1470

CITROËN	6455EF
PEUGEOT	6455EF
TOYOTA	884500H020

Valeo 818014 — 359x351x16

CA1475

CITROËN	6455EE
PEUGEOT	6455EE
TOYOTA	884500H010

Valeo 818015 — 524x368x12

CA2013

CITROËN	6455EK
PEUGEOT	6455EK

Valeo 818017 — 560x309x16

FIAT	46821270

Valeo 818018 — 506x349x22

CITROËN	6455CG
FIAT	1340166080
PEUGEOT	6455CG

Valeo 818019 — 560x312x18

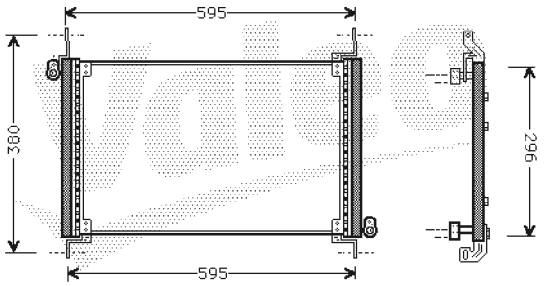

FIAT	46532988

Valeo 818020 — 500x310x16

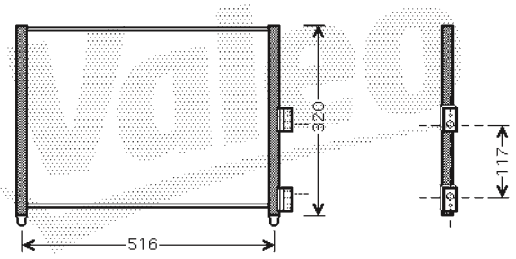

FIAT	51708909
FIAT	51733013

Valeo 818021 — 560x309x16

FIAT	46820833
FIAT	51732993
LANCIA	46820833

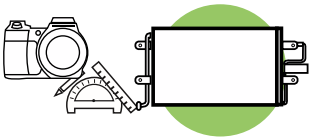

Valeo 818023 — 628x362x16

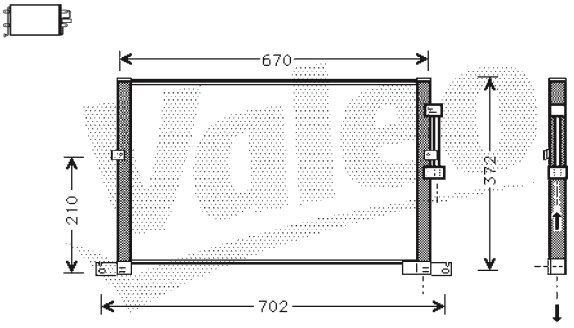

JAGUAR	C2S5302

Valeo 818028 — 570x393x20

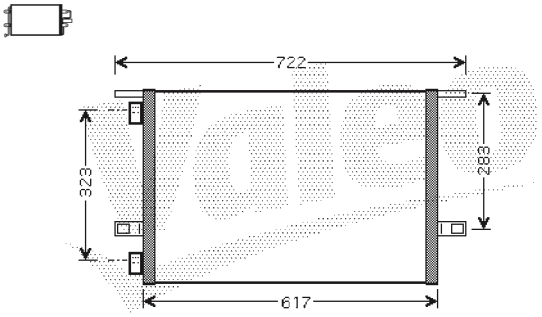

RENAULT	6025310510

Valeo 818024 — 580x442x25

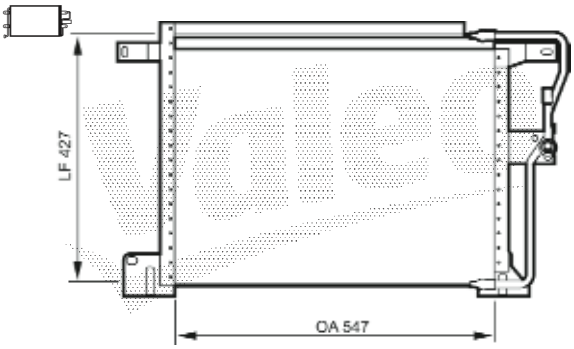

JEEP	55036473
JEEP	56005016

Valeo 818029 — 660x384x18

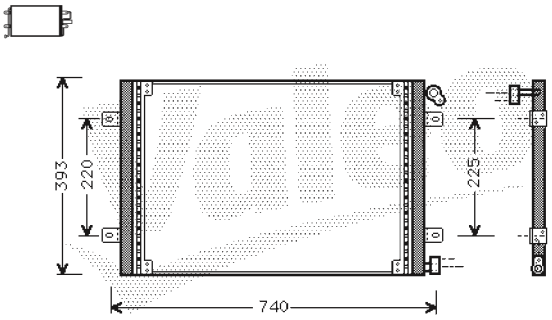

RENAULT	6025313325

Valeo 818025 — 620x408x20

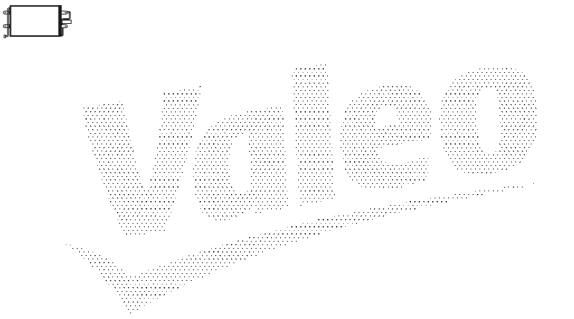

LAND ROVER	JRB100790

Valeo 818030 — 625x338x22

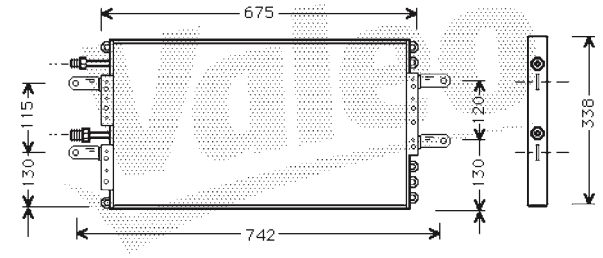

RENAULT	6025306732

Valeo 818027 — 570x394x22

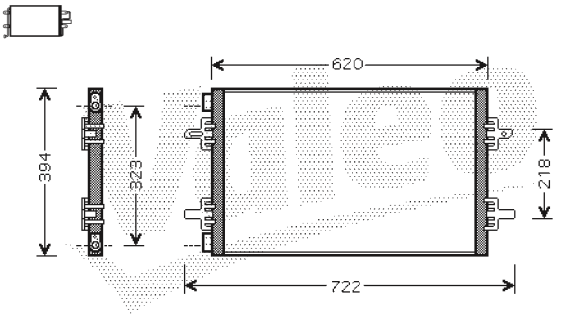

RENAULT	6025313367

Valeo 818031 — 330x330x25

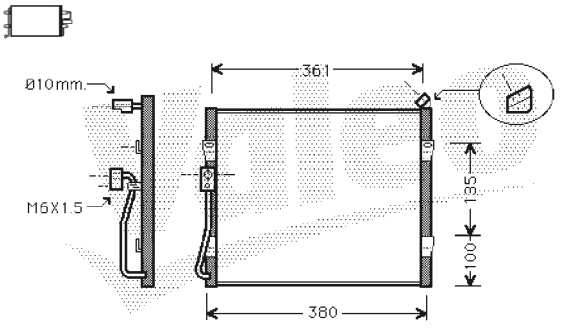

ROVER	JRB100190

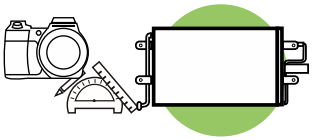

Valeo 818032 — 595x366x16

TOYOTA — 8846044350

Valeo 818036 — 682x325x18

IVECO — 99487944

Valeo 818033 — 745x353x16

Picture not available
Image non disponible
Nicht verfügbares Bild
Imagen no disponible
Immagine non disponibile
Zdjęcie niedostępne

MAN — 81619200018

Valeo 818037 — 648x310x16

Picture not available
Image non disponible
Nicht verfügbares Bild
Imagen no disponible
Immagine non disponibile
Zdjęcie niedostępne

IVECO — 504022601

Valeo 818034 — 673x457x22

MERCEDES — 9425000054

Valeo 818038 — 570x480x20

Picture not available
Image non disponible
Nicht verfügbares Bild
Imagen no disponible
Immagine non disponibile
Zdjęcie niedostępne

IVECO TRUCKS — 8189330

Valeo 818035 — 500x537x16

Picture not available
Image non disponible
Nicht verfügbares Bild
Imagen no disponible
Immagine non disponibile
Zdjęcie niedostępne

MERCEDES — 9705000054

Valeo 818039 — 365x534x24

Picture not available
Image non disponible
Nicht verfügbares Bild
Imagen no disponible
Immagine non disponibile
Zdjęcie niedostępne

VOLVO TRUCKS — 8157212

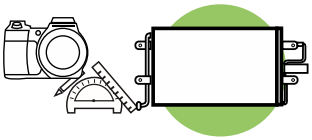

Valeo 818040 — 678x305x34

Picture not available
Image non disponible
Nicht verfügbares Bild
Imagen no disponible
Immagine non disponibile
Zdjęcie niedostępne

MAN	81619200012

Valeo 818041 — 688x260x48

Picture not available
Image non disponible
Nicht verfügbares Bild
Imagen no disponible
Immagine non disponibile
Zdjęcie niedostępne

MAN	81619206011

Valeo 818042 — 678x260x48

Picture not available
Image non disponible
Nicht verfügbares Bild
Imagen no disponible
Immagine non disponibile
Zdjęcie niedostępne

MAN	81619206018

Valeo 818043 — 585x250x48

Picture not available
Image non disponible
Nicht verfügbares Bild
Imagen no disponible
Immagine non disponibile
Zdjęcie niedostępne

MAN	81619200011

Valeo 818044 — 652x286x48

Picture not available
Image non disponible
Nicht verfügbares Bild
Imagen no disponible
Immagine non disponibile
Zdjęcie niedostępne

MAN	81619206026

Valeo 818046 — 628x374x16

FORD	1234248

Valeo 818047 — 555x382x16

OPEL	1850073
VAUXHALL	93170608

Valeo 818050 — 805x360x20

FORD	4041973
FORD	4471423

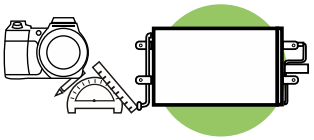

818060 — 506x294

DAEWOO	96566331
DAEWOO	96569392

818075 — 588x352

HYUNDAI	9760617000

818061 — 542x414

DAEWOO	96539632

818080 — 590x415

KIA	976063E000

818070 — 563x318x22

HONDA	80110S10003

818081 — 634x328x25

MITSUBISHI	MB813733
MITSUBISHI	MR116930

818074 — 499x344

HYUNDAI	976061C100
HYUNDAI	976061C000

818084 — 587x298x20

MAZDA	B01A61480

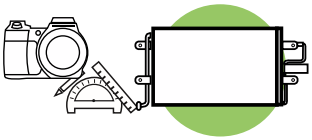

818085 — 550x368x20

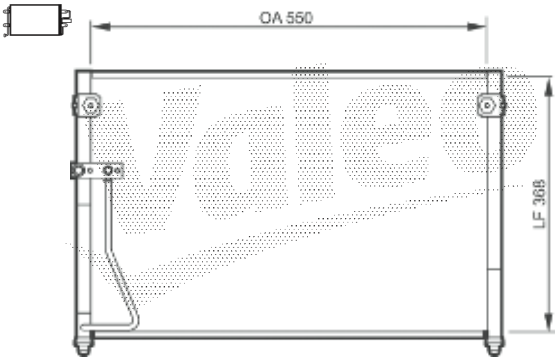

MAZDA	GE4T61480B

818087 — 609x308x20

MAZDA	B25F61480B
MAZDA	B25H61480
MAZDA	B25H61480A
MAZDA	B25P61480A

818088 — 414x298x18

MAZDA	BJ3A61480A
MAZDA	BJ3A61480C

818090 — 650x322x16

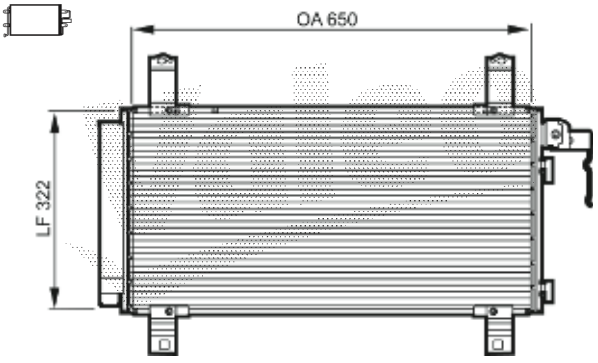

MAZDA	GJYA6148ZA

818092 — 605x338x21

MAZDA	C10061480
MAZDA	C10061480B

818101 — 702x308x16

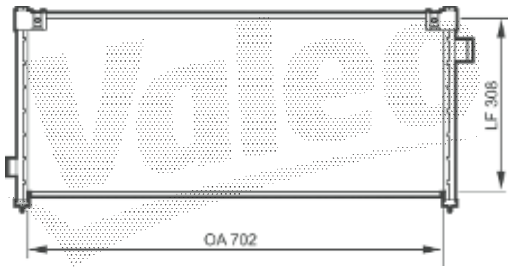

SUBARU	73210AC050

818104 — 594x328x25

TOYOTA	8846020470

818105 — 632x368x17

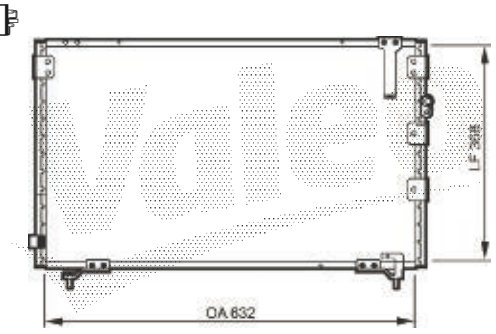

TOYOTA	8846044030
TOYOTA	8846044050

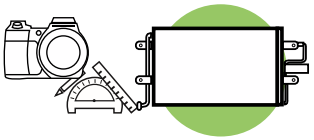

Valeo 818107 — 682x311,8

TOYOTA	8846012480

Valeo 818162 — 574x315x16

CA1546

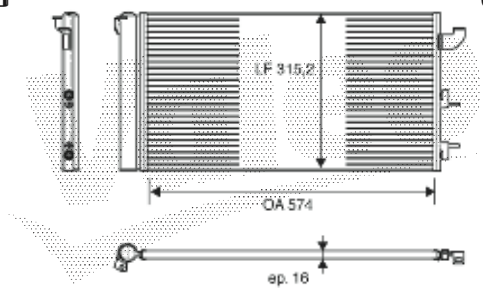

FIAT	51782753

Valeo 818114 — 588x381x16

OPEL VAUXHALL	1850098 93178960

Valeo 818165 — 510x377x16

CA1531

RENAULT	8200443897

Valeo 818116 — 439x345x17

Picture not available
Image non disponible
Nicht verfügbares Bild
Imagen no disponible
Immagine non disponibile
Zdjęcie niedostępne

IVECO TRUCKS	504080822

Valeo 818166 — 547x377x16

CA1532

RENAULT	8200468911

Valeo 818118 — 588x381x16

OPEL	1850089

Valeo 818168 — 520x331x12

OPEL VAUXHALL	1850111 93182213

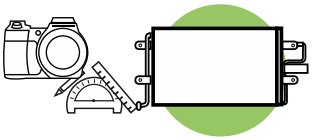

Valeo 818170 — 568x361x12

CITROËN	6455CY
PEUGEOT	6455CY

Valeo 818171 — 568x361x12

CITROËN	6455CX
PEUGEOT	6455CX

Valeo 818172

RENAULT TRUCKS	5010315372

Valeo 818173 — 679x461x16

CA1483

MERCEDES	9065000054
VOLKSWAGEN	2E0820413

Valeo 818175 — 625x412x16

CA1456

SAAB	12804660

Valeo 818190 — 608x381x16

AUDI	8E0260403Q

Valeo 818191 — 506x349x22

CITROËN	6455T3
FIAT	1312857080
PEUGEOT	6455T3

Valeo 818192 — 540x263x16

FIAT	55700408
OPEL	1850168
VAUXHALL	55700408

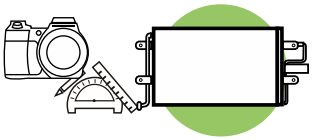

Valeo 818193 — 570x353x12

FIAT	55700406
OPEL	1850119
VAUXHALL	55700406

Valeo 818194 — 560x381x16

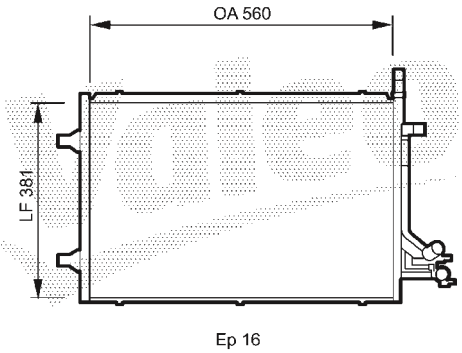

Ep 16

FORD	1334196

Valeo 818195 — 578x365x16

FORD	1363775
MAZDA	DE9461480B

Valeo 818200 — 628x371x12

MERCEDES	2035000854

Valeo 818984 — 639x328

VOLVO TRUCKS	3981637

Valeo 818985 — 606x438

IVECO TRUCKS	41214450

Valeo 818986 — 500x538

DAF	1629115

Valeo 818987 — 794x338

VOLVO TRUCKS	3980841

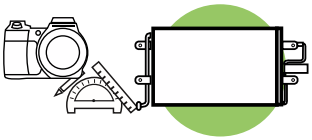

Valeo

Valeo 818988 — 720x358

SCANIA 1446258

Valeo 818989 — 586x322

VOLVO TRUCKS 8144690

Valeo 818990 — 744x333

VOLVO TRUCKS 3962652

Valeo 818991 — 587x333

VOLVO TRUCKS 3962651

Valeo 818992 — 746x403

SCANIA 1380374

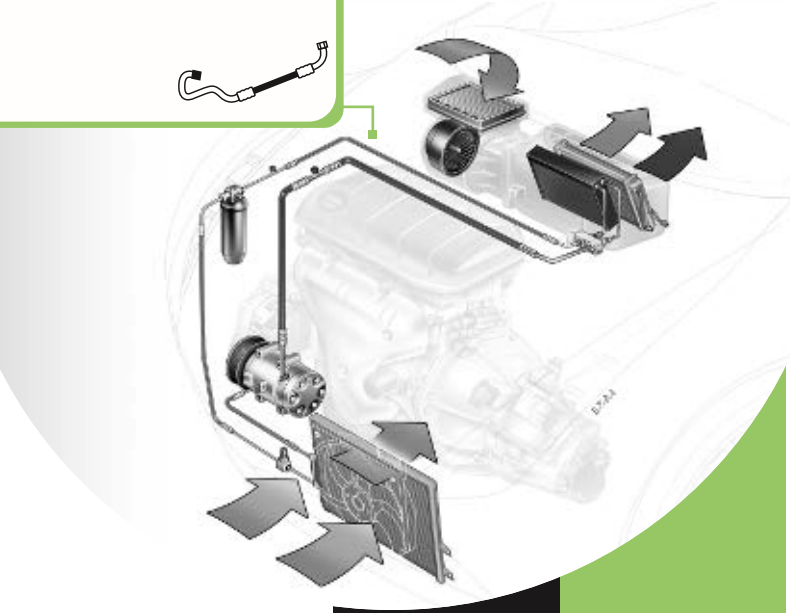

A/C HOSES ASSEMBLY
CANALISATIONS
KÄLTEMITTELLEITUNGEN
TUBERIAS A/C
TUBOS DE AR CONDICIONADO
CANALIZZAZIONI CLIM
AIRCO-LEIDINGEN
PRZEWODY UK?ADU KLIMATYZACJI
Набор соединительных трубок СКВ
KLIMATIZAČNŽHADICE
CONDUCTA
KLIMA HORTUMLARI
Σωληνώσεις κλιματισμού

3.2

EN

Function
AC Hoses route the fluid and connect the loop components together.
Composition : a rigid part (aluminum or steel tube), a flexible part (rubber hose), fittings and seals, noise absorbers (mufflers), valves and pads…

Replacement
A/C hoses must be replaced in case of breakdown or leakage.
A/C hoses are the primary source of leaks of fluid. The critical points :
- End fittings (perfect geometry)
- rubber hose (compliant with the SAE J2064 standard)
- Secure crimping between rigid tubes and rubber hoses
- Quality of crimping

Repair recommendations
Replacing an A/C Hose assembly requires:
- replacing the receiver drier/accumulator
- replacing the expansion valve (precaution)
- using the new seals and o'rings when replacing any components of the A/C Loop
- clean and flushing the A/C loop
- vacuum pumping
- recharge fluid and oil
- perform leak checks
- no compromise with quality approved by reinforcement of European Regulation on the A/C gas (leakage regulation)

FR

Fonction
Les canalisations sont les organes d'acheminement du fluide frigorigène et d'interconnexion entre les composants de la boucle. Constitution: une partie rigide (tube aluminium ou acier), une partie souple (tuyau caoutchouc), raccords et joints, absorbeurs de bruit (muflers), valves, mousses...

Remplacement
Les canalisations doivent être remplacées en cas de choc ou de fuite.
Les canalisations sont la première cause de fuite de fluide.
Les points critiques sont:
- raccords d'extrémité (géométrie parfaite)
- tuyau caoutchouc conforme à la norme SAE J2064 standard.
- Sertissage précis entre tube rigide et tuyau souple
- Qualité du sertissage.

Recommandations Valeo pour la Réparation
Remplacer les canalisations entraine:
- changement du filtre déshydratant (bouteille déshydratante/cartouche/accumulateur)
- changement du détendeur (par précaution)
- utilisation de nouveaux joints à chaque changement de composant
- nettoyage et rinçage du circuit avec un équipement approprié (Clim Fill Pro VALEO)
- tirage au vide
- recharge en fluide et huile frigorigène
- recherche de fuite
- Pas de compromis sur la qualité du fait du renforcement de la législation européenne sur les fluides frigorigènes (réduction des fuites de gaz dans l'atmosphère)

DE

Funktion
Ein System aus Schläuchen gewährleistet die Beförderung zwischen den einzelnen Bauteilen.
Dazu gehören: ein steifes Element (Aluminium- oder Stahlrohr), ein flexibles Element (Gummischlauch), Garnituren und Dichtungen, Schalldämpfer, Ventile, Stoßdämpfer usw.

Austausch
Die Schläuche müssen im Fall einer Beschädigung oder eines Lecks ausgewechselt werden.
Die Schläuche sind die Hauptursache von Leckagen. Die kritischen Punkte:
- Armaturenverbindungen (Bündigkeit)
- Gummischlauch (in Übereinstimmung mit der Norm SAE J2064)
- Absolut dichte Anschlussverbindungen zwischen steifen Rohren und Gummischläuchen
- Qualität der Anschlussverbindungen

Reparaturempfehlungen
Folgende Eingriffe sind beim Auswechseln der Schläuche vorzunehmen:
- Auswechseln des Trockners/Akkumulators
- Auswechseln des Drosselventils (vorbeugende Maßnahme)
- Beim Auswechseln von Bauteilen des Klimakreislaufs grundsätzlich neue Dichtungen und O-Ringe verwenden
- Reinigen und Spülen des Klimakreislaufs mit geeignetem Material
- Gewährleistung des Vakuums
- Auffüllen des Mediums und Öls
- Leckprüfung
- Keine Kompromisse bei der Erfüllung der Qualitätsanforderungen der verschärften EU-Bestimmungen über Kühlgas (Bestimmungen über Lecks)

SP

Función
Las tuberias de climatización dirigen el fluido e interconectan los componentes del circuito.
Composición: una pieza rígida (tubo de aluminio o acero), una parte flexible (manguera de caucho), fijaciones y juntas, aislantes acústicos (silenciadores), válvulas, etc.

Sustitución
Las tuberias de climatización deben reemplazarse en caso de choque o fugas.
Las tuberias de climatización son la fuente principal de fugas de fluido.
Puntos críticos:
- Piezas terminales (geometría perfecta).
- Manguera de caucho (conforme a la norma SAE J2064).
- Empalme perfecto entre los tubos y las mangueras.
- Calidad del empalme.

Recomendaciones para la reparación
El reemplazo del conjunto de tuberias de climatización requiere:
- Sustituir la botella/acumulador,
- Sustituir la válvula de expansión (precaución),
- utilizar juntas nuevas al reemplazar cualquier componente,
- limpiar el circuito de climatización con el equipo adecuado,
- utilizar la bomba de vacío,
- recargar fluido y aceite,
- verificar la ausencia de fugas.
- Hay que comprometerse con la calidad, de acuerdo con el refuerzo del Reglamento Europeo sobre el gases de climatización (reglamento sobre fugas).

IT

Funzione
Le canalizzazioni A/C servono a convogliare il fluido e collegare fra di loro i vari componenti del circuito.Composizione: una parte rigida (tubo di alluminio o di acciaio), una parte flessibile (tubo di gomma), raccordi e guarnizioni, attenuatori di rumore (moffole), valvole di carica, coperture di espanso…

Sostituzione
Le canalizzazioni AC devono essere sostituiti in caso di urto, deformazione o perdita.
Le canalizzazioni AC sono la prima causa delle perdite di fluido refrigerante.
I punti critici sono:
- i raccordi terminali (geometria perfetta)
- il tubo di gomma (conforme allo standard SAE J2064)
- il collegamento estremamente preciso fra i tubi rigidi e i tubi di gomma
- la qualità del serraggio (lubrificazione delle guarnizioni)

Raccomandazioni Valeo per la riparazione
La sostituzione delle canalizzazioni AC richiede:
- la sostituzione del filtro disidratatore/accumulatore
- la sostituzione della valvola d'espansione (precauzione)
- l'utilizzo di nuove guarnizioni e nuovi o'ring quando si sostituisce qualsiasi componente del circuito A/C
- fare il lavaggio, se è il caso, dell'impianto il circuito A/C con un'attrezzatura adeguata
- fare il vuoto
- ricarica del fluido e dell'olio
- verifica delle perdite
- nessun compromesso con la qualità approvato con un rafforzamento della normativa europea sul gas A/C (relativa alle perdite)

NL

Functie
De airconditioning-leidingen sturen het koudemiddel door het systeem en verbinden de componenten van het systeem met elkaar.
Samenstelling: een onbuigzaam deel (aluminium of stalen buis), een buigzaam deel (rubberslang), koppelstukken en dichtingen, geluiddempers, kleppen, kussens enz.

Vervanging
De airconditioning-leidingen moeten worden vervangen na een aanrijding of ingeval van lekken
De airconditioning-leidingen zijn de eerste bron van lekken van koelmedium.
De zwakke punten zijn:
- Eindkoppelstukken (de geometrie moet perfect zijn)
- Rubberslang (moet voldoen aan de SAE J2064 norm)
- De onbuigzame buizen en rubberslangen moeten perfect nauwkeurig op elkaar geperst worden
- De kwaliteit van het in elkaar persen

Aanbevelingen bij de reparatie
Bij het vervangen van de airconditioning-leidingen is het noodzakelijk om:
- de vochtafscheider/accumulator te vervangen
- het expansieventiel te vervangen (voorzorgsmaatregel)
- nieuwe dichtingen en O-ringen te gebruiken, wanneer u onderdelen van het airconditioningsysteem vervangt
- het airconditioningsysteem te reinigen en door te spoelen met geschikte apparatuur
- het systeem vacuüm te pompen
- het koelmiddel en de koelmiddel olie bij te vullen
- te controlleren op lekkages
- de kwaliteit niet in gevaar te brengen die is goedgekeurd door versterking van de Europese regelgeving over gas in airconditioningsystemen (regelgeving inzake gaslekken)

PL

Funkcja
Przewody A/C rozprowadzają czynnik i łączą ze sobą poszczególne elementy układu.
Skład: elementy sztywne (z aluminium lub rurek stalowych), elementy elastyczne (gumowe węże), połączenia i uszczelki, tłumiki hałasu, zawory i wkładki...

Wymiana
Przewody A/C należy wymienić po uszkodzeniu w wyniku wypadku lub po wykryciu nieszczelności.
Przewody A/C są głównym źródłem wycieków czynnika.
Punkty krytyczne to:
- Zakończenia łączące (dopasowanie kształtu)
- Gumowe węże (zgodne ze standardami SAE J2064)
- Zaciski zabezpieczające pomiędzy sztywnymi rurkami i gumowymi wężami
- Jakość zacisków

Zalecenia naprawy
Wymiana / montaż przewodu A/C wymaga:
- Wymiany filtra osuszacza / zasobnika
- Wymiany zaworu rozprężnego (prewencja)
- Zastosowania nowych uszczelek i oringów w przypadku wymiany jakichkolwiek elementów układu A/C
- Oczyszczenia i przepłukania układu A/C
- Wytworzenia próżni
- Napełnienia czynnika chłodniczego i uzupełnienia oleju
- Wykonania kontroli szczelności
- Konieczne jest przestrzeganie Europejskiego Rozporządzenia w sprawie gazu A/C (dot. postępowania w przypadku wycieku)

RU

Функция
Шланги кондиционирования воздуха направляют поток жидкости и соединяют компоненты системы.
Состав: жесткая часть (алюминиевая или стальная трубка), гибкая часть (резиновый шланг), арматура и уплотнения, поглотители шума (глушители), клапаны и прокладки...

Замена
Шланги кондиционирования воздуха следует заменять после обнаружения поломки или утечки.
Шланги кондиционирования воздуха являются основным источником утечек жидкости. Критические точки:
- Концевая арматура (правильная конфигурация)
- Резиновый шланг (согласно стандарту SAE J2064)
- Обеспечить гофрирование между жесткими трубками и резиновыми шлангами
- Качество гофрирования

Рекомендации по ремонту
Замена шлангов кондиционирования воздуха требует:
- замены осушителя/сборника
- замены расширительного клапана (мера предосторожности)
- использования новых прокладок и кольцевых уплотнений при замене компонентов системы кондиционирования воздуха
- очистки и промывки системы кондиционирования воздуха
- вакуумной откачки
- перезаправки жидкостью и маслом
- проверки на утечку
- жестких требований к качеству в соответствии с европейскими нормами по кондиционированию воздуха (регулирование утечек хладагента)

CZ

Funkce
Trubky klimatizace vedou chladivo a propojují jednotlivé komponenty v okruhu. Složení: pevné díly (hliníkové nebo ocelové trubky) a flexibilní díly (pryžové hadice), šroubení a těsnění, tlumiče hluku, ventily a destičky…

V měna
Trubky klimatizace musí být vyměněny v případě poškození nebo úniku.
Trubky klimatizace jsou primárním zdrojem úniku chladiva.
Kritické body:
- Zakončovací šroubení (perfektní tvar)
- Pryžové hadice (odpovídají standardu SAE J2064)
- Bezpečné spoje mezi pevnou trubkou a pryžovou hadicí
- Kvalita přechodového spoje

Doporučení pro opravy
Výměna trubek klimatizace vyžaduje:
- Výměnu vysoušeče/akumulátoru
- Výměnu expanzního ventilu (preventivní opatření)/škrtící trysky
- Použití nových těsnění a O-kroužků při výměně jakýchkoliv komponentů v okruhu klimatizace
- Vyčištění a propláchnutí okruhu klimatizace
- Vakuování
- Výměna chladiva a oleje
- Provedení kontroly úniku chladiva
- Dodržení všech předpisů týkajících se kvality podle evropských předpisů pro náplně klimatizací (předpisy týkající se úniků)

HU

Szerepe
A klímarendszer csövei a fő alkatrészeket kötik össze, bennük áramlik a hűtőközeg.
Részei: merev rész (aluminium vagy acél), rugalmas rész (gumi), csatlakozások, plombák, zajcsillapítók, szelepek.

Cseréje
A klímarendszer csöveit szivárgás esetén kell cserélni.
A klímarendszer csövei a szivárgás első számú forrásai.
Kritikus pontok:
- csatlakozások (a geometriának tökéletesnek kell lennie)
- gumicsövek (az SAE J2064 szabványnyal kell egyezniük)
- pontos illeszkedés a csövek merev és gumiból készült részei között
- illesztések minősége

Javítási tanácsok
Egy vagy több cső cseréje esetén:
- cserélje ki a szárító szűrőt
- cserélje ki az expanziós szelepet
- mindig használjon új gyűrűket és alátéteket, ha a klímarendszer valamelyik alkatrészét kicseréli.
- öblítse át a rendszert.
- végezzen alapos vákuumozást
- töltsön vissza megfelelő hűtőközeget és olajat
- végezzen szivárgástesztet
- ne kössön kompromisszumot, válasszon minőségi alkatrészt, amely megfelel a szigorú európai szabályzásnak a hűtőgázokról

RO

Funcţiune:
Furtunul de aer condiţionat conduce lichidul şi leagă componentele sistemului.
Compoziţie: o parte rigidă (tub de aluminiu sau oţel), o parte flexibilă (furtun din cauciuc), garnituri şi racorduri, absorbanţi de zgomot (amortizor de zgomot), supape şi tampoane.

Înlocuire:
Furtunurile de aer condiţionat trebuie înlocuite în caz de defect sau scurgere.
Furtunurile de aer condiţionat constituie principalele surse de scurgere.

Punctele critice:
- Garnituri de închidere (geometrie perfectă)
- Furtun de cauciuc (în conformitate cu standardul SAE J2064)
- Asiguraţi încreţirea între tuburile rigide şi cele din cauciuc.
- Calitatea încreţirii

Recomandări de reparaţie:
Înlocuirea unui ansamblu de furtun de aer condiţionat necesită:
- înlocuire radiatorului climă / a acumulatorului
- înlocuirea ventilului de extindere (precauţie)
- la schimbarea pieselor folosirea racordurilor şi inelelor de etanţare noi.
- curăţarea şi spălarea circuitului de aer condiţionat
- pompare în vid
- schimbarea uleiului şi a lichidului
- verificaţi să nu existe scurgeri
- nici un compromis în ceea ce priveţte calitatea asigurată de respectarea prevederilor Regulamentului European privind gazele AC (regulament împotriva scurgerii)

TU

İşlev:
Klima hortumları akışkanın izlediği yol olup sistem parçalarını birbirlerine bağlar.
Bileşimi: Sert bir parça (aliminyum ya da çelik tüp), esnek kısım (Lastik hortum), bağlantı ve contalar, gürültü emiciler, valf ve destekler.

Değişim:
Klima hortumları sızıntı ve hasar durumlarında değiştirilmelidir
Klima hortumları akışkan kaçaklarının önde gelen sebebidir.

Önemli noktalar:
- Bağlantı sonları (doğru bağlantı)
- Lastik hortum (SAE J2064 standardını karşılayan)
- Metal tüpler ve lastik hortum arasında güvenli bağlantı
- Bağlantı elemanı kalitesi

Onarım önerileri:
Sistemdeki hortumların yenilenmesi sırasında yapılması önerilen işlemler:
- Kurutucunun değişimi
- Detantörün değişimi
- Klima çevriminde yer alan herhangi bir parçanın değişiminde yeni conta ve o-ringler kullanımı
- Sistemin basınç kullanılarak iyice temizlenmesi
- Vakumlama işleminin yapılması
- Yağ ve akışkanın yeniden doldurulması
- Sızıntı muayenesinin yapılması
- Klima gazları konusunda ilgili Avrupa düzenlemelerinin (sızıntı yönetmeliği) gerekirdikleri uygulanmalıdır

GR

Λειτουργία :
Οι σωληνώσεις του συστήματος κλιματισμού δρομολογούν το ψυκτικό υγρό και συνδέουν τα εξαρτήματα μεταξύ τους.
Σύνθεση: ένα άκαμπτο τμήμα (σωλήνας από αλουμίνιο ή χάλυβα), ένα εύκαμπτο τμήμα (λαστιχένιος σωλήνας), συνδέσεις και τσιμούχες, απορροφητές θορύβου (σιλανσιέ), βαλβίδες, παρενθέματα…

Αντικατάσταση :
Οι σωληνώσεις πρέπει να αντικατασταθούν σε περίπτωση τρακαρίσματος ή διαρροής.
Οι σωληνώσεις είναι η πρώτη αιτία διαρροής του ψυκτικού υγρού.
Τα κρίσιμα σημεία είναι:

- Συνδέσεις στα άκρα (τέλειας γεωμετρίας).
- λαστιχένιος εύκαμπτος σωλήνας (συμβατό με τον κανονισμό SAE J2064).
- Απολύτως σφικτή σύνδεση μεταξύ των άκαμπτων σωλήνων και των λαστιχένιων εύκαμπτων σωλήνων.
- Ποιότητα σφιξίματος.

Συστάσεις απο την Valeo για την επισκευή :

Για την αντικατάσταση των σωληνώσεων ενός συστήματος κλιματισμού απαιτείται:
- αντικατάσταση του ξηραντήρα/συσσωρευτή.
- αντικατάσταση της βαλβίδας εκτόνωσης (προληπτικά).
- χρήση καινούργιων τσιμουχών όταν αντικαθίστανται οποιαδήποτε εξαρτήματα του κυκλώματος
- καθαρισμός του κυκλώματος με τον κατάλληλο εξοπλισμό (Clim Fill Pro VALEO).
- Υποπίεση και γέμισμα με ψυκτικό υγρό και ψυκτικό λάδι.
- Έλεγχος για τυχόν διαρροές.
- Η απόλυτη στεγανοποίηση πρέπει να εξασφαλιστεί όπως ορίζεται από τον ευρωπαϊκό κανονισμό για τον περιορισμό των εκπομπών φρέον.

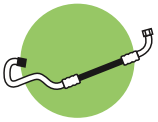

		CC			2 3	OE	Valeo	
CITROËN								
BERLINGO (96>2002)								
1.8 D	D	1769	XUD7		07/96 ▸ 07/99	6457TW	**818440**	
1.9 D	D	1769	DW8		07/96 ▸ 07/99	6457TW	**818440**	
1.9 D	D	1905	XUD9A		07/96 ▸ 07/99	6457TW	**818440**	
FIAT								
BRAVA								
1.9 TD	D	1910	182A8.000, 182A7.000		03/96 ▸	46524949	**818462**	
BRAVO								
1.9 JTD, 1.9 TD	D	1910	182A8.000, 182A7.000 182B4.000		03/96 ▸	46524949	**818462**	
MAREA								
1.9 TD	D	1910	182A8.000, 182A7.000		07/96 ▸	46524949	**818462**	
MARENGO (185) (95>)								
1.9 JTD, 1.9 TD	D	1910	182A8.000, 182B4.000 182A7.000		01/95 ▸	46524949	**818462**	
PUNTO (93>99)								
1.2 i	E	1242	176B4.000, 176A8.000		03/96 ▸ 09/99	46459451	**818445**	
FORD								
MONDEO (93>96)								
1.6 i	E	1597	L1F		01/93 ▸ 08/96	1029766	**818468**	
1.8 i	E	1796	RKA		01/93 ▸ 08/96	1029766	**818468**	
2.0 i	E	1998	NGA		01/93 ▸ 08/96	1029766	**818468**	
MERCEDES								
E CLASS (210)								
E300D D	D	2996	606.912		04/95 ▸ 06/99	6062300456	**818452**	
PEUGEOT								
306 (93>97)								
1.1 i	E	1124	TU1M		05/93 ▸ 02/97	6457T9	**818479**	
1.4, 1.4 i	E	1360	TU3JP, TU3MC, TU3, TU3.2		05/93 ▸ 02/97	6457T9	**818479**	
1.6 i	E	1587	TU5JP		05/93 ▸ 02/97	6457T9	**818479**	
508								
1.6 Hdi	D	1560	DV6C		01/11 ▸	6448X0	**515078**	
2.0 Hdi	D	1997	DW10BTED4/F		01/11 ▸	6448X0	**515078**	
PEUGEOT								
PARTNER (96>2002)								
1.8 D	D	1769	XUD7		06/96 ▸ 07/99	6457TW	**818440**	
1.9 D	D	1868	DW8		06/96 ▸ 07/99	6457TW	**818440**	
1.9 D	D	1905	XUD9A		06/96 ▸ 07/99	6457TW	**818440**	
RANCH (96>2002)								
1.8 D	D	1769	XUD7		06/96 ▸ 07/99	6457TW	**818440**	

• **New** Nouveau **Neu** Nuevo **Novo** Nuovo **Nieuw** Nowi **Новый** Novy **Nou** Yeni **Νέους**

		cc				OE	Valeo	
PEUGEOT (.../...)								
RANCH (96>2002) (.../...)								
1.9 D	D	1868	DW8		11/98 ▸ 07/99	6457TW	**818440**	
1.9 D	D	1905	XUD9A		06/96 ▸ 07/99	6457TW	**818440**	
ROVER								
200 (95>99)								
211 ▸471564	E	1113	11K2F		01/98 ▸	JUE106010	**818500**	
214 ▸471564	E	1396	14K4F4, 14K2F		11/95 ▸	JUE106010	**818500**	
216 ▸471564	E	1589	16K4F4		11/95 ▸	JUE106010	**818500**	
220 ▸471564	E	1796	18K16		10/96 ▸	JUE106010	**818500**	
220 ▸471564	D	1994	20T2R, 20T2N		11/95 ▸	JUE106010	**818500**	
SEAT								
CORDOBA (93>96)								
1.4 i	E	1390	AEX		09/95 ▸ 06/96	6K0820721B	**818411**	
1.4 i	E	1391	ABD		11/93 ▸ 11/95	6K0820721B	**818411**	
1.6 i	E	1598	ABU		11/93 ▸ 07/94	6K0820721B	**818411**	
CORDOBA (96>99)								
1.4 i, 1.4 i 16V	E	1390	APQ, AEX, AKV, ANX, AFH		07/96 ▸ 05/99	6K0820721B	**818411**	
1.6 i	E	1598	ALM, AEE		05/97 ▸ 05/99	6K0820721B	**818411**	
IBIZA (93>99)								
1.4 i	E	1391	ABD		09/93 ▸ 06/96	6K0820721B	**818411**	
1.4 i, 1.4 i 16V	E	1390	AEX, APQ, ANX, AKV, AFH		07/95 ▸ 08/99	6K0820721B	**818411**	
1.6 i	E	1598	ABU, ALM, AEE		09/93 ▸ 08/99	6K0820721B	**818411**	
SEAT								
INCA								
1.4 i	E	1390	AKV, AEX, APQ		11/95 ▸ 06/03	6K0820721B	**818411**	
1.6 i	E	1598	AEE		06/97 ▸ 09/00	6K0820721B	**818411**	
VOLKSWAGEN								
CADDY (95>2004)								
1.4 i	E	1390	APQ, AEX, AKV		11/95 ▸ 06/03	6K0820721B	**818411**	
1.6 i	E	1598	AEE		06/96 ▸ 12/00	6K0820721B	**818411**	

Condenser inlet / Compressor outlet Entrée Condenseur/ Sortie Compresseur
Klimaleitung: Kondensator / Kompressor Entrada Condensador / Salida Compresor
Entrada condensador / Saída compressor Ingresso Condensatore / Uscita Compressore
Ingang Condensor/Uitgang compressor Vstup kondenzátoru / výstup kompresoru
Intrarea condensator / ieşirea compresor Kondenser girişi/Kompresör çıkışı
Είσοδος Συμπυκνωτή / Εξοδος Συμπιεστή

Condensor outlet Sortie Condenseur
Klimaleitung: Kondensatorausgang
Salida del Compresor **Saída Compressor**
Uscita Condensatore **Uitgang concensor**
V stup kondenzátoru Ieşirea condensator
Kondenser çıkışı Εξοδος Συμπυκνωτή

Valeo 515078

PEUGEOT 6448X0

Valeo 818445

FIAT 46459451

Valeo 818411

SEAT 6K0820721B
VOLKSWAGEN 6K0820721B

Valeo 818452

MERCEDES 6062300456

Valeo 818440

CITROËN 6457TW
PEUGEOT 6457TW

Valeo 818462

FIAT 46524949

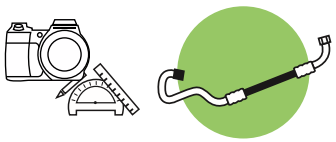

Valeo 818468

FORD 1029766

Valeo 818479

PEUGEOT 6457T9

Valeo 818500

ROVER JUE106010

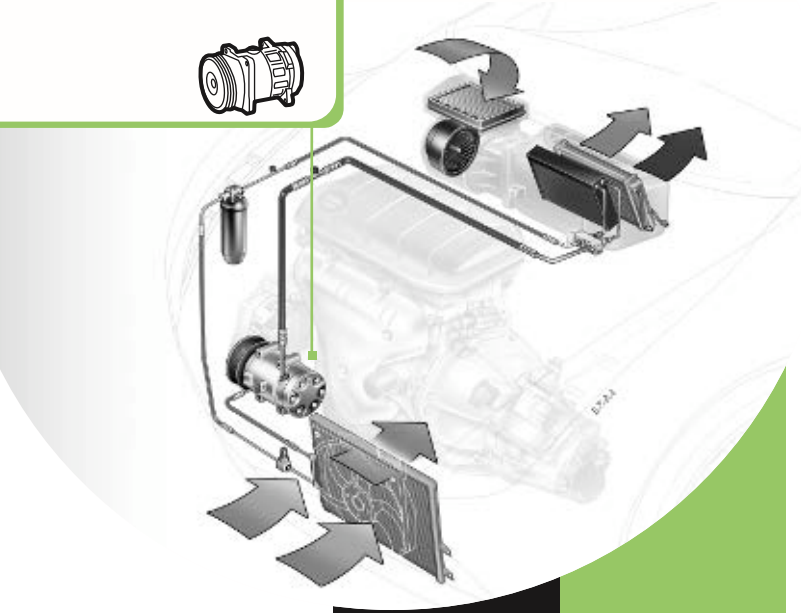

COMPRESSOR
COMPRESSEUR
KOMPRESSOR
COMPRESSOR
COMPRESOR
COMPRESSORE
COMPRESSOR
SPRĘŁARKA
Компрессор
KOMPRESOR
COMPRESOR
KOMPRESOR
Συμπιεστής

4.1

EN

Function
The compressor is at the center of the system, it is directly fixed to the engine block, driven by the belt. It allows the circulation of the fluid in the A/C loop. It ensures the compression of the refrigerant between the outlet of the evaporator and the inlet of the condenser.

Replacement
The compressor must be replaced after a crash.
Typical problems with compressors :
- Lack / excess or not approriate choice of refrigerant oils
- Improper circuit cleaning (procedure : vacuum, flushing, materiels and components quality, …)
- Internal corrosion due to the presence of humidity in the circuit
- Circuit blocked (filter drier clocked and expansion valve blocked)
- Electrical problems in the clutch

Repair recommendations
- Choose the right compressor, according to the car manufacturers
- Use technical code cross-list for precise selection page 593
- Before removing the compressor, indicate the direction of movement of the V belt
- Perform leak checks before and after replacing the compressor
- The A/C loop must be cleaned appropriately before installing the new compressor
- Ensure a good vacuum, when charging the refrigerant gas
- The filter drier / accumulator and expansion valve / orifice tube must be replaced together.
- Choose the compatible refrigerant oils (quality and viscosity).
- Use the new seals and o'rings when replacing any components in the A/C Loop

FR

Fonction
Le compresseur est un élément important de la boucle, il est directement fixé sur le bloc moteur. Il fait circuler le fluide dans la boucle de climatisation. Il assure la compression du fluide entre la sortie de l'évaporateur et l'entrée du condenseur.

Remplacement
Le compresseur doit être changé en cas de panne
Les problèmes les plus typiques des compresseurs :
- Manque / excès ou mauvais choix d'huile frigorigène
- Nettoyage incorrect du circuit (procédure, qualité des composants et matériels d'intervention, …)
- Corrosion interne dûe à la présence d'humidité dans le circuit
- Un bouchon dans le circuit (Filtre déshydratant colmaté ou détendeur bloqué fermé, …)
- Problèmes électriques de l'embrayage

Recommandations Valeo pour la Réparation
- Monter le bon compresseur, correspondant à l'application véhicule
- Utiliser les pages Cross-List (page 593) pour identifier la bonne référence
- Avant de retirer le compresseur, vérifier le sens de rotation de la courroie
- Faire une recherche de fuites avant et après un remplacement de compresseur
- Nettoyer le circuit de Climatisation avant le changement du compresseur
- Faire un long tirage au vide avant de remplir le circuit
- Remplacer le filtre déshydratant et le détendeur ou orifice calibré (garantie compresseur)
- Ajouter la quantité et le type d'huile préconisés.
- Remplacer les joints

DE

Funktion
Der riemengetriebene Kompressor ist das Kernstück des Systems. Er ist direkt am Motorblock befestigt. Er gewährleistet die Zirkulation des Mediums innerhalb des Klimakreislaufs und die Verdichtung des Kühlmittels zwischen dem Verdampferausgang und dem Kondensatoreingang.

Austausch
Der Kompressor muss nach einer Kollision ausgewechselt werden.
Häufige Probleme mit Kompressoren:
- Zu wenig / zu viel oder ungeeignetes Kompressoröl
- Unsachgemäße Reinigung des Kreislaufs (Verfahren: Vakuum, Spülen, Qualität von Material und Bauteilen usw.)
- Korrosion im Innern aufgrund von Feuchtigkeit im Kreislauf
- Blockierter Kreislauf (Filtertrockner verstopft und Drosselventil blockiert)
- Elektrische Probleme an der Kupplung

Reparaturempfehlungen
- Wählen Sie den adäquaten, dem Automobilherstellerteil entsprechenden Kompressor
- Verwenden Sie die Code-Vergleichsliste zur gezielten Suche des adäquaten Bauteils, Seite 593
- Markieren Sie vor dem Ausbau des Kompressors die Betriebsrichtung des Keilriemens
- Prüfen Sie vor und nach dem Auswechseln des Kompressors, ob Lecks vorhanden sind
- Reinigen und spülen Sie den Klimakreislauf vor dem Installieren des neuen Kompressors mit geeignetem Material
- Stellen Sie beim Einführen des Kühlgases sicher, dass das erforderliche Vakuum vorhanden ist
- Wechseln Sie gleichzeitig den Filtertrockner/-akkumulator und das Drosselventil bzw. die Festdrossel aus
- Verwenden Sie ausschließlich die vorgesehenen kompatiblen Kompressoröle (Qualität und Dickflüssigkeit)
- Verwenden Sie beim Auswechseln von Bauteilen des Klimakreislaufs grundsätzlich neue Dichtungen und O-Ringe

SP

Función

El compresor es el elemento central del sistema. Está fijado directamente en el bloque motor, es accionado por una correa y hace circular el fluido en el circuito de climatización. Su función es comprimir el fluido refrigerante entre la salida del evaporador y la entrada del condensador.

Sustitución

El compresor debe cambiarse en caso de avería.

Problemas típicos de los compresores:

- Falta, exceso o elección inadecuada del aceite refrigerante.
- Limpieza incorrecta del circuito (procedimiento: vacío, lavado, materiales y componentes de calidad, etc.)
- Corrosión interna debida a la presencia de humedad en el circuito.
- Circuito bloqueado (filtro deshidratante obstruido y válvula de expansión bloqueada).
- Problemas eléctricos del embrague.

Recomendaciones para la reparación

- Elegir el compresor adecuado, según las indicaciones del constructor.
- Utilizar la lista de códigos cruzados para una selección precisa, página 593.
- Antes de retirar el compresor, comprobar el sentido de movimiento de la correa.
- Verificar la ausencia de fugas antes y después de sustituir el compresor.
- Limpiar el circuito de climatización con el debido equipo antes de instalar el nuevo compresor.
- Comprobar el vacío al recargar el gas refrigerante.
- Sustituir el filtro deshidratante / acumulador y la válvula de expansión / orificio calibrado conjuntamente.
- Elegir únicamente aceites refrigerantes específicos compatibles (calidad y viscosidad).
- Utilizar juntas nuevas al reemplazar cualquier componente del circuito de climatización.

IT

Funzione

Il compressore è un elemento essenziale del sistema, è montato direttamente sul blocco motore e azionato da una cinghia. Fa circolare il fluido all'interno del circuito di climatizzazione. Garantisce la compressione del refrigerante fra l'uscita dell'evaporatore e l'entrata del condensatore.

Sostituzione

Il compressore deve essere sostituito in caso di rottura

Problemi più frequenti relativi al compressore:

- Olio refrigerante Insufficiente / in eccedenza o non adeguato
- Pulizia non corretta del circuito (procedura: vuoto, qualità dei componenti e dei materiale dell'intervento, …)
- Corrosione interna dovuta alla presenza di umidità nel circuito
- Ostruzione del circuito (filtro disidratatore intasato e valvola d'espansione bloccata)
- Problemi elettrici della frizione

Raccomandazioni Valeo per la riparazione

- Scegliere il compressore appropriato, conforme alle specifiche del costruttore dell'automobile
- Utilizzare la crosslist dei codici tecnici per una scelta precisa, pag. 593
- Prima di rimuovere il compressore, individuare la direzione del movimento della cinghia
- Verificare che non vi siano perdite prima e dopo la sostituzione del compressore
- Pulire e fare il lavaggio del circuito A/C con un'attrezzatura adeguata prima di montare il nuovo compressore
- Assicurare un corretto livello di vuoto in fase di ricarica del refrigerante
- Sostituire il filtro disidratatore / accumulatore e la valvola d'espansione / tubo d'espansione. Scegliere solo gli specifici olii refrigeranti compatibili (qualità e viscosità). Usare nuove guarnizioni e nuovi o'ring quando si sostituisce qualsiasi componente del circuito A/C.

NL

Functie

De compressor is het hart van de airconditioning. Hij is direct op het motorblok bevestigd en wordt aangedreven door een riem.
De compressor zorgt dat het koelmiddel in het systeem circuleert en comprimeert het koelmiddel tussen de uitlaat van de verdamper en de inlaat van de condensor.

Vervanging

Na een aanrijding moet de compressor worden vervangen.

Problemen die het meest voorkomen bij compressors :

- Te weinig / te veel of verkeerd koudemiddel
- Koelsysteem niet goed schoongemaakt (methode: vacuüm, doorspoelen, kwaliteit van de gebruikte materialen en bestanddelen enz.)
- Inwendige corrosie veroorzaakt door vocht in het systeem.
- Systeem verstopt (filter van de vochtafscheider verstopt en expansieventiel geblokkeerd)
- Elektrische problemen in de koppeling

Aanbevelingen bij de reparatie

- Kies de juiste compressor, overeenkomstig de specificaties van de autoconstructeur
- Gebruik de lijst met verwijzingen naar de technische artikelreferenties voor de juiste keuze, op pagina 593
- Noteer de draairichting van de V-snaar, voordat u de compressor verwijdert
- Controleer op lekken voor en na vervanging van de compressor
- Het airconditioningsysteem reinigen en doorspoelen met geschikte apparatuur, voordat u de nieuwe compressor installeert
- Zorg voor een goed vacuüm, wanneer u het systeem met koelmiddel-gas vult
- Vervang de filter droger / accumulator- en expansieventiel / orifice tube.
- Gebruik alleen de geschikte koelmiddel-olie (kwaliteit en viscositeit).
- Gebruik nieuwe afdichtingen en O-ringen wanneer u onderdelen van het airconditioningsysteem vervangt.

PL

Funkcja

Sprężarka jest w centrum systemu, jest przytwierdzona bezpośrednio do bloku silnika i napędzana przez pasek klinowy. Pozwala na cyrkulację czynnika chłodniczego w układzie A/C. Zapewnia kompresję czynnika chłodniczego między wylotem z parownika i wlotem skraplacza.

Wymiana

Sprężarka musi być wymieniona po uszkodzeniu w wyniku wypadku lub jeśli została zatarta.

Typowe problemy ze sprę arkami:

- Niedobór / nadmiar lub źle dobrany olej sprężarkowy
- Niewłaściwe czyszczenie układu (procedura: próżnia, płukanie, jakość materiałów i komponentów, ...)
- Wewnętrzna korozja na skutek obecności wilgoci w układzie
- Układ zablokowany (filtr osuszacz zatkany i zawór rozprężny zablokowany)
- Problemy z elektryką w sprzęgle

Zalecenia naprawcze

- Dobierz odpowiednią sprężarkę, zgodnie ze specyfikacją producenta samochodu
- Użyj listy kodów technicznych Valeo na stronie 593 dla precyzyjnego doboru
- Przed wyjęciem sprężarki, zaznacz kierunek ruchu paska klinowego
- Wykonaj kontrolę szczelności przed i po wymianie sprężarki
- Układ A/C musi być oczyszczony przed instalacją nowej sprężarki
- Zapewnij dobry poziom próżni przed rozpoczęciem napełniania czynnika chłodniczego
- Filtr osuszacz / zasobnik i zawór rozprężny / dławik należy wymieniać jednocześnie
- Dobierz odpowiedni olej sprężarkowy (jakość i lepkość).
- Zastosuj nowe uszczelki i oringi w przypadku wymiany jakichkolwiek elementów układu A/C

RU

Функция

Компрессор находится в центре системы, напрямую прикреплен к блоку цилиндров и приводится в движение ременной передачей. Он обеспечивает циркуляцию жидкости в системе кондиционирования воздуха. Он также обеспечивает компрессию хладагента между выходом испарителя и входом конденсатора.

Замена

Компрессор следует заменить после аварии.

Типичные проблемы с компрессором :

- Недостаток / избыток или неправильный выбор масла для хладагента
- Неправильная очистка системы (порядок : вакуум, промывка, качества инструментов и компонентов, …)
- Внутренняя коррозия из-за влажности в системе
- Блокировка цепи (фильтр-влагоотделитель засорился и расширительный клапан заблокирован)
- Электрические проблемы в муфте

Рекомендации по ремонту

- Выбрать подходящий компрессор согласно требованиям производителя автомобиля
- Использовать технический кросс лист для точного выбора, стр. 593
- Перед демонтажом компрессора обозначить направление движения клинового ремня
- Проверить на утечку перед и после замены компрессора
- Систему кондиционирования воздуха следует тщательно прочистить перед установкой нового компрессора
- Убедиться в полной герметичности при заправке хладагента
- Заменять вместе фильтр-влагоотделитель / сборник и расширительный клапан / дроссельную трубку.
- Выбрать подходящее масло для хладагента (качество и вязкость).
- Использовать новые прокладки и кольцевые уплотнения при замене компонентов в системе кондиционирования воздуха

CZ

Funkce
Kompresor je srdcem systému a je přímo upevněn na blok motoru a je poháněn řemenem. Umožňuje zajistit cirkulaci chladicí kapaliny v okruhu klimatizace. Zajišťuje kompresi chladiva mezi výstupem výparníku a vstupem do kondenzátoru.

V měna
Kompresor musí být po poškození po poškození vyměněn.
Typické problémy s kompresory:
- Nedostatek/příliš velké množství oleje v chladivu nebo volba nesprávného oleje
- Nesprávné čištění okruhu (postup: vakuování, proplachování, kvalita použitých materiálů a komponentů, ...)
- Vnitřní koroze v důsledku přítomnosti vlhkosti v okruhu
- Okruh je zablokován (filtr s vysoušečem je ucpán nebo je ucpán expanzní ventil)
- Problémy s elektromagnetickou spojkou

Doporučení pro opravy
- Zvolte správný kompresor odpovídající údajům výrobce vozidla
- Použijte pro přesný výběr tabulku technických kódů na straně 593
- Před demontáží kompresoru si poznamenejte směr otáčení klínového řemenu!
- Před výměnou a po výměně kompresoru proveďte kontrolu těsnosti okruhu!
- Před instalací nového kompresoru musí být okruh klimatizace pečlivě vyčištěn!
- Při správnou výměnu chladiva je nutné vytvořit hluboké vakuum!
- Vysoušeč a expanzní ventil nebo akumulátor a škrtící tryska by musí být vyměňovány společně.
- Zvolte správný olej do chladiva (kvalita-druh a viskozita).
- Při výměně komponentů v okruhu klimatizace použijte nová těsnění a O-kroužky.

HU

Szerepe
A klímaszivattyú képezi a klímarendszer központi részét, a motorblokkon található és az ékszíj hajtja meg. Ez az alkatrész keringteti a hűtőközeget a klímarendszeren belül. Biztosítja a hűtőközeg kompresszióját a párologtató és a klímahűtő között.

Cseréje
A klímaszivattyút baleset vagy belső meghibásodás során kell cserélni.
Gyakran el forduló meghibásodások:
- Túl sok / kevés vagy nem megfelelő típusú klímaolaj használata.
- A rendszer nincs rendesen karbantartva (vákuum, öblítés, szivárgásteszt,...)
- Belső korrózió a rendszerben található nedvesség miatt
- Dugulások a rendszerben (szárító szűrő vagy expanziós szelep)
- A mágneskapcsoló elektronikai hibája

Javítási tanácsok
- Válassza a jármű típusának megfelelő szivattyút.
- A választásban az 593. oldalon található technikai kódok is segíthetnek.
- Mielőtt kiszereli a klímaszivattyút, jelölje be az ékszíj forgásának irányát.
- Végezzen szivárgástesztet a kompresszor cseréje előtt és után is.
- Öblítse át a rendszert mielőtt felszereli az új kompresszort.
- A hűtőközeg visszatöltése előtt végezzen alapos vákuumozást.
- A kompresszor cseréjével egyidejűleg cserélje ki a szárítószűrőt és az expanziós szelepet is.
- Ügyeljen a megfelelő klímaolaj kiválasztására (minőség és viszkozitás)
- Mindig használjon új gyűrűket és alátéteket, ha a klímarendszer valamelyik alkatrészét kicseréli.

RO

Funcţiune:
Compresorul este situat în centrul sistemului, este fixat direct pe blocul motorului, acţionat de curea. Asigură circulaţia lichidului în sistemul de aer condiţionat. Asigură compresia refrigerantului între evacuatorul evaporatorului şi racordul de umplere al condensatorului.

Înlocuire:
Compresorul trebuie înlocuit în caz de defect.

Probleme tipice cu compresorul:
- Lipsă / exces de ulei refrigerant, respectiv ulei refrigerant nepotrivit
- Curăţare nepotrivită a circuitului (procedură: aspirare, spălare, calitatea materialelor şi pieselor, ...)
- Coroziune internă datorită prezenţei umidităţii în circuit
- Circuit înfundat (filtru uscător înfundat şi ventilul de extindere blocat)
- Probleme electrice la ambreaj

Recomandări de reparaţie:
- Alegeţi compresorul potrivit conform fabricaţiei
- Pentru o alegere precisă folosiţi lista codurilor tehnice de la pagina 593
- Înaintea înlăturării compresorului indicaţi direcţia de mişcare a curelei V
- După înlocuirea compresorului efectuaţi verificaţi să nu existe scurgeri.
- Sistemul de aer condiţionat trebuie curăţat în mod potrivit înaintea instalării compresorului nou.
- Înlocuirea gazului refrigerant trebuie efectuat în vid.
- Filtrul uscător / acumulatorul şi ventilul de extindere / tubul deschiderii trebuie înlocuite împreună .
- Alegeţi uleiul refrigerant potrivit (calitativ, respectiv din punct de vedere al viscozităţii).
- La schimbarea pieselor folosiţi racorduri şi inele de etanţare noi.

TU

İşlev:
Kompresör sistemin merkezidir. Direkt olarak motor blokuna bağlıdır ve bir kayış aracılığı ile çalıştırılır. Sistem içindeki akışkana hareket verir. Akışkanın evaporatör çıkışıyla kondenser girişi arasında gerekli oranda sıkışmasını sağlar.

Değişim:
Kaza gibi işlev bozukluklarına sebep olan hallerde değiştirilir.
Kompresörde en çok rastlanan sorunlar
- Eksik ya da uygun olmayan soğutucu yağ
- İyi yapılmamış sistem temizliği (Yöntem:Vakumlama, basınçla temizlik, doğru ürün ve parça kullanımı)
- Sistem içinde nem bulunmasından kaynaklanan içten oluşan korozyon.
- Tıkalı çevrim (bloke olmuş kurutucu vedetantör)
- Kavrama sisteminde olabilecek elektrik arızaları

Onarım önerileri:
- Araç üreticisi tarafından önerilen doğru kompresörü kullanınız
- Doğru ürün seçimi için sayfa 593'te belirtilen teknik kod çapraz listesini kullanınız
- Kompresörü sökmeden önce V kayışın dönüş yönüne dikkat ediniz
- Değişimden önce ve sonra sızıntı kontrolü yapılmalıdır
- Yeni kompresör takılmadan önce sistem dikkatle temizlenmelidir
- Gaz doldururken yeterli basınç oluştuğuna emin olunuz
- Kurutucu, detantör, orifis tüpü beraberce değiştirilmelidir.
- Kalite ve akışkanlık açısından doğru soğutucu yağ kullandığınızdan emin olun
- Klima çevriminde yer alan herhangi bir parçanın değişiminde yeni conta ve o-ringler kullanınız.

GR

Λειτουργία :
Ο συμπιεστής είναι η καρδιά του συστήματος, είναι απευθείας συνδεδεμένος πάνω στο μπλοκ του κινητήρα και κινείται από ένα ιμάντα. Επιτρέπει την κυκλοφορία του ψυκτικού υγρού στο κύκλωμα. Εξασφαλίζει τη συμπίεση του υγρού ανάμεσα στην έξοδο του εξατμιστή και την είσοδο του συμπυκνωτή.

Αντικατάσταση :
Ο συμπιεστής πρέπει να αντικατασταθεί σε περίπτωση βλάβης.

Συνηθισμένα προβλήματα των συμπιεστών:

- Ελλειψη / περίσσευμα ή λανθασμένη επιλογή ψυκτικού λαδιού.
- Ακατάλληλη διαδικασία καθαρισμού του κυκλώματος (διαδικασία, κενό, πλύσιμο, ποιότητα υλικών και εξαρτημάτων,...).
- Εσωτερική διάβρωση λόγω ύπαρξης υγρασίας στο κύκλωμα.
- Μπλοκάρισμα του κυκλώματος (ξηραντήρα φραγμένος ή βαλβίδα εκτόνωσης μπλοκαρισμένη).
- Ηλεκτρικά προβλήματα του συμπλέκτη.

Προτάσεις απο την Valeo για την επισκευή :

- Επιλέξτε το σωστό συμπιεστή, σύμφωνα με το όχημα.
- Χρησιμοποιήστε την λίστα αντιστοιχίων κωδικών για να κάνετε σωστή και ακριβή επιλογή, σελίδα 593.
- Πριν από την απομάκρυνση του συμπιεστή σημειώστε την κατεύθυνση κίνησης του ιμάντα V.
- Κάντε έλεγχο για τυχόν διαρροές πριν και μετά την αντικατάσταση του συμπιεστή.
- Πριν την εγκατάσταση του συμπιεστή καθαρίστε το κύκλωμα κλιματισμού με ενα κατάλληλο μηχάνημα.
- Εξασφαλίστε ότι υπάρχει καλό κενό πριν το γέμισμα με το ψυκτικό υγρό.
- Αντικαταστήστε μαζί το ξηραντήρα (φίλτρο υγρού)/συσσωρευτή και τη βαλβίδα εκτόνωσης/βαλβίδα αντεπιστροφής.
- Χρησιμοποιήστε μόνο τα ειδικά συμβατά ψυκτικά λάδια (ποιότητα και πυκνότητα).
- Οταν αντικαθιστάτε οποιοδήποτε εξάρτημα του κυκλώματος, κατόπιν να χρησιμοποιείτε καινούργια στεγανοποιητικά λαστιχάκια και τσιμούχες.

		cc				OE NEW	Valeo NEW	OE ES	Valeo ES	
ALFA ROMEO										
145										
1.4 i Twin Spark 16V 3174688 ▸	E	1370	AR33503		02/99 ▸ 06/01	46786262	**699284**			SCS08C
1.6 i Twin Spark 16V	E	1598	AR67601	ES	12/96 ▸ 06/01	60653652	**699175**		**699675**	SD7V16
1.8 i Twin Spark A 16V	E	1747	AR32201	ES	06/98 ▸ 06/01	60653652	**699175**		**699675**	SD7V16
2.0 i AGV 16V	E	1970	AR32301	ES	06/98 ▸ 06/01	60653653	**699201**		**699701**	SD7V16
1.9 JTD	D	1910	AR32302	ES	03/99 ▸ 06/01	60810355	**699075**		**699575**	V5
1.9 TD	D	1929	AR33601, AR67501	ES	09/94 ▸ 03/99	60810355	**699075**		**699575**	V5
146										
1.4 i Twin Spark 16V 3174687 ▸	E	1370	AR33503		02/99 ▸ 06/01	46786262	**699284**			SCS08C
1.6 i Twin Spark 16V	E	1598	AR67601	ES	12/96 ▸ 06/01	60653652	**699175**		**699675**	SD7V16
1.8 i Twin Spark AGV 16V	E	1747	AR32201	ES	06/98 ▸ 06/01	60653652	**699175**		**699675**	SD7V16
2.0 i Twin Spark AGV 16V	E	1970	AR32301	ES	06/98 ▸ 06/01	60653652	**699175**		**699675**	SD7V16
1.9 JTD	D	1910	AR32302		03/99 ▸ 06/01	60659643	**699284**			SCS08C
1.9 TDs	D	1929	AR33601, AR67501	ES	12/94 ▸ 06/01	60810355	**699075**		**699575**	V5
147 (2000>2004)										
1.6 i Twin Spark 16V	E	1598	AR32104, AR37203	ES	10/00 ▸ 09/04	60653652	**699175**		**699675**	SD7V16
2.0 i Twin Spark 16V	E	1970	AR32310	ES	10/00 ▸ 09/04	60653652	**699175**		**699675**	SD7V16
3.2 i V6 24V	E	3179	932A.000	ES	02/03 ▸ 09/04	60813335	**699174**		**699674**	SD7V16
1.9 JTD	D	1910	182B9.000 192B1.000 937A2.000/A4	ES	10/00 ▸ 09/04	60653652	**699175**		**699675**	SD7V16
147 (2004>)										
1.6 i Twin Spark 16V	E	1598	AR32104, AR37203	ES	10/04 ▸	60653652	**699175**		**699675**	SD7V16
2.0 i Twin Spark 16V	E	1970	AR32310	ES	10/04 ▸	60653652	**699175**		**699675**	SD7V16
1.9 JTD	D	1910	182B9.000 937A2.000/A4/A5	ES	10/04 ▸	60653652	**699175**		**699675**	SD7V16
155										
1.7 i Twin Spark	E	1749	AR67103, AR67105	ES	11/91 ▸ 08/97	60513513			**699581**	SD709
1.7 i Twin Spark	E	1749	AR67103, AR67105	ES	11/91 ▸ 08/97	60602694			**699507**	SD7V16
1.8 i Twin Spark	E	1773	AR67101, AR67102	ES	11/91 ▸ 03/95	60513513			**699581**	SD709
1.8 i Twin Spark	E	1773	AR67101, AR67102	ES	11/91 ▸ 03/95	60602694			**699507**	SD7V16
2.0 i Twin Spark	E	1995	AR67201, AR67202	ES	11/91 ▸ 03/95	60513513			**699581**	SD709
2.0 i Twin Spark	E	1995	AR67201, AR67202	ES	11/91 ▸ 03/95	60602694			**699507**	SD7V16
1.9 TD	D	1929	AR33601, AR67501	ES	07/93 ▸ 08/97	60810355	**699075**		**699575**	V5
2.5 TD	D	2500	VM07B, VM31B	ES	07/93 ▸ 08/97	60604347			**699611**	SD7H15
156 (97>2003)										
1.6 i Twin Spark **1.6 i Twin Spark 16V**	E	1598	AR32102, AR32103 AR32104, AR67601	ES	09/97 ▸ 03/03	60653652	**699175**		**699675**	SD7V16
1.8 i Twin Spark **1.8 i Twin Spark 16V**	E	1747	AR32201, AR32205	ES	09/97 ▸ 03/03	60653652	**699175**		**699675**	SD7V16
2.0 i Twin Spark 16V	E	1970	AR32301	ES	09/97 ▸	60653653	**699201**		**699701**	SD7V16
2.0 i Twin Spark **2.0 i Twin Spark 16V**	E	1970	AR32301, AR32310	ES	04/00 ▸ 03/03	60653652	**699175**		**699675**	SD7V16
2.5 i V6 24V	E	2492	AR32401, AR32405	ES	09/97 ▸ 03/03	60813335	**699174**		**699674**	SD7V16
1.9 JTD, 1.9 JTD 16V	D	1910	192B1.000 937A2.000 AR32302, AR37101	ES	09/97 ▸ 03/03	60630739	**699175**		**699675**	SD7V16
2.4 JTD	D	2387	839A6.000 AR32501		09/97 ▸ 03/03	60814060	**699279**			TV12SC

• **New** Nouveau **Neu** Nuevo **Novo** Nuovo **Nieuw** Nowi **Новый** Novy **Nou** Yeni **Νέους**

MQ : Valeo Matching Quality Valeo gleichwertige Qualität **Valeo Calidad Equivalente**
Część Valeo o Jakości Porównywalnej z Oryginałem

Use technical code cross-list for precise selection page 648
Utiliser les pages Cross-List (page 648) pour identifier la bonne référence
Verwenden Sie die Code-Vergleichsliste zur gezielten Suche des adäquaten Bauteils, Seite 648
Utilizar la lista de códigos cruzados para una selección precisa, página 648
Utilizzare la crosslist dei codici tecnici per una scelta precisa, pag. 648
Gebruik de lijst met verwijzingen naar de technische 648 voor de juiste keuze, op pagina 648
U yj listy kodów technicznych Valeo na stronie 648 dla precyzyjnego doboru
A se folosi paginile crosslist ca sa identifiati referita corecta
Χρησιμοποιήστε την λίστα αντιστοιχίων κωδικών για να κάνετε σωστή και ακριβή επιλογή, σελίδα 648

		cc				OE NEW	Valeo NEW	OE ES	Valeo ES	
ALFA ROMEO (.../...)										
156 (2003>)										
1.6 i Twin Spark 16V	E	1598	AR32104	ES	04/03 ▸	60653652	**699175**		**699675**	SD7V16
1.8 i Twin spark 16V	E	1747	AR32205	ES	04/03 ▸	60653652	**699175**		**699675**	SD7V16
2.0 JTS 16V **2.0 TwinSpark 16V** **2.0 i Twin Spark 16V**	E	1970	932A2.000 937A1.000 AR32310	ES	04/03 ▸	60653652	**699175**		**699675**	SD7V16
2.5 i V6 24V	E	2492	AR32405	ES	04/03 ▸	60813335	**699174**		**699674**	SD7V16
1.9 JTD, 1.9 JTD 16V	D	1910	192A5.000 937A2/A4.000	ES	04/03 ▸	60653652	**699175**		**699675**	SD7V16
159 (2005>2008)										
1.9 JTS 16V	E	1859	939A6.000		07/05 ▸ 02/08	60693746	**813121**			DCS17IC
2.2 JTS 16V	E	2198	939A5.000		07/05 ▸ 02/08	60693746	**813121**			DCS17IC
3.2 JTS V6 24V	E	3196	939A.000		12/05 ▸ 02/08	60693333	**813255**			DCS17
1.9 JTDM 8V, 1.9 JTDM 16V	D	1910	939A1.000/A2/A7/A8		07/05 ▸ 02/08	60693331	**813122**			DCS17IC
2.4 JTDM 20V	D	2387	939A3.000		07/05 ▸ 02/08	60693332	**813123**			DCS17IC
159 (2008>2010)										
1.8 TBi 16V	E	1742	939B1.000		05/09 ▸ 06/10	60693333	**813255**			DCS17
1.8 MPi 16V	E	1796	939A4.000		02/08 ▸ 06/10	60693333	**813255**			DCS17
3.2 JTS V6 24V	E	3196	939A.000		02/08 ▸ 06/10	60693333	**813255**			DCS17
159 (2010>)										
1.8 TBi 16V	E	1742	939B1.000		06/10 ▸ 12/10	60693333	**813255**			DCS17
3.2 JTS V6 24V	E	3196	939A.000		06/10 ▸	60693333	**813255**			DCS17
164 (87>92)										
2.0 i Twin Spark	E	1962	AR06416, AR06420	ES	07/87 ▸ 09/92	60513513			**699581**	SD709
164 (92>98)										
2.0 i Twin Spark	E	1962	AR64103	ES	09/92 ▸ 09/98	60600702			**699646**	SD7H15
2.0 V6 Turbo	E	1997	AR64102		09/92 ▸ 09/98	60601070	**699114**			SD7H15
3.0 i V6	E	2959	AR64305, AR66303		09/92 ▸ 09/98	60601070	**699114**			SD7H15
166 (98>)										
2.0 i Twin Spark 16V	E	1970	AR34103, AR36301	ES	10/98 ▸ 09/03	60653652	**699175**		**699675**	SD7V16
2.0 i Twin Spark 16V	E	1970	AR34103	ES	10/98 ▸	60653653	**699201**		**699701**	SD7V16
2.0 i V6 Turbo	E	1996	AR34102	ES	10/98 ▸ 09/03	60813335	**699174**		**699674**	SD7V16
2.5 i V6 24V	E	2492	AR34201, AR36201	ES	10/98 ▸ 09/03	60813335	**699174**		**699674**	SD7V16
3.0 i V6 24V	E	2959	AR34301/2 AR36101	ES	10/98 ▸ 09/03	60813335	**699174**		**699674**	SD7V16
BRERA										
1.8 JTB 16V	E	1742	939B1.000		04/09 ▸ 10/10	60693333	**813255**			DCS17
2.2 JTS 16V	E	2198	939A5.000		01/06 ▸	60693746	**813121**			DCS17IC
3.2 JTS V6 24V	E	3196	939A.000		01/06 ▸ 10/10	60693333	**813255**			DCS17
2.4 JTDM 20V	D	2387	939A3.000		01/06 ▸	60693332	**813123**			DCS17IC
GTV (95>2003)										
1.8 i Twin Spark 16V	E	1747	AR32201	ES	05/98 ▸ 02/03	60653652	**699175**		**699675**	SD7V16
2.0 Twin Spark A 16V	E	1970	AR32301	ES	05/98 ▸ 02/03	60653652	**699175**		**699675**	SD7V16
2.0 Twin Spark A 16V	E	1970	AR32301	ES	05/98 ▸	60653653	**699201**		**699701**	SD7V16
3.0 i V6 24V	E	2959	AR16102	ES	02/97 ▸ 10/00	60813335	**699174**		**699674**	SD7V16
GTV (2003>)										
2.0 JTS 16V **2.0 i Twin Spark 16V**	E	1970	937A1.000 AR32310	ES	03/03 ▸	60653652	**699175**		**699675**	SD7V16

You must replace the receiver drier with the compressor
Vous devez remplacer la bouteille déshydratante avec le compresseur
Tauschen Sie den Trockner mit dem Kompressor
Es obligatorio cambiar el Filtro Deshidratante con el Compresor
Tem de substituir o filtro desidratante com o compressor
E' necessario cambiare il filtro disidratatore con il compressore
U moet de filterdroger samen met de compressor vervangen
Musisz wymienić filtr osuszacz przy wymianie sprę arki
Рекомендируем замену осушителя вместо с компрессором
Při výměně kompresoru je nutné vyměnit také vysoušeč
Nu untați sa schimbați uscatorul cu compresorul
Kompresörle birlikte nem alıcıyı da değiştirin
Πρέπει να αντικαταστήσετε το φίλτρο υγρού μαζί με το συμπιεστή

		cc				OE NEW	Valeo NEW	OE ES	Valeo ES	
ALFA ROMEO (.../...)										
GTV (2003>) (.../...)										
3.2 i V6 24V	E	3179	936A.000	ES	03/03 ▸	60813335	**699174**		**699674**	SD7V16
SPIDER (95>2003)										
1.8 i Twin Spark 16V	E	1747	AR32201	ES	02/95 ▸ 02/03	60653652	**699175**		**699675**	SD7V16
SPIDER II (2006>)										
2.2 JTS Twin Spark 16V	E	2198	939A5.000		03/06 ▸	60693746	**813121**			DCS17IC
1.8 JTB 16V	E	1742	939B1.000		04/09 ▸ 09/10	60693333	**813255**			DCS17
3.2 i V6 24V	E	3196	939A.000		03/06 ▸ 09/10	60693333	**813255**			DCS17
AUDI										
80 (91>95)										
2.6 E V6	E	2598	ABC, ACZ	ES	10/92 ▸ 07/95	4A0260805AH			**699727**	DCW17D
2.8 i V6 8C-P-090830 ▸	E	2771	AAH	ES	10/92 ▸ 07/95	4A0260805AH			**699727**	DCW17D
100 (90>94)										
2.2 4AP060001 ▸	E	2226	AAN	ES	01/93 ▸ 07/94	4A0260805AH			**699727**	DCW17D
2.3, 2.3 i 4AP032004 ▸	E	2309	AAR	ES	10/91 ▸ 07/94	4A0260805AH			**699727**	DCW17D
2.6 V6, 2.6 i V6 4AP032004 ▸	E	2598	ABC, ACZ	ES	07/93 ▸ 07/94	4A0260805AH			**699727**	DCW17D
2.8 i V6 4AP060001 ▸	E	2771	AAH	ES	01/93 ▸ 07/94	4A0260805AH			**699727**	DCW17D
2.4 D 4AP032004 ▸	D	2370	AAS	ES	01/93 ▸ 07/94	4A0260805AH			**699727**	DCW17D
2.5 TDi 4AP032004 ▸	D	2460	AAT	ES	01/93 ▸ 07/94	4A0260805AH			**699727**	DCW17D
A1 (2010>)										
1.2 TFSI	E	1197	CBZA	ES	05/10 ▸	5N0820803C		8J0260805	•**813838**	6SEU14C
1.4 TFSI 16V	E	1390	CAVG,CAXA,CPTA CTHG	ES	05/10 ▸	1K0820859T		8J0260805	•**813838**	6SEU14C
2.0 TFSI 16V	E	1948	CDLH	ES	03/12 ▸	1K0820859T		8J0260805	•**813838**	6SEU14C
1.6 TDI 16V	D	1598	CAYB,CAYC	ES	05/10 ▸ 05/11	5N0820803C		8J0260805	•**813838**	6SEU14C
A3 (96>2003)										
1.6 i 8L-X-085218 ▸	E	1595	AEH, APF, AKL	ES	09/96 ▸ 05/99	1J0820805	•**813400**		**813700**	DCS17
1.6 i 8L-Y-036430 ▸	E	1595	AKL, AVU, AEH APF, BFQ	ES	09/99 ▸ 06/03	1J0820803K	•**813400**		**813700**	DCS17
1.8 i 20V, 1.8 i Turbo 20V	E	1781	AQA, AJQ, AGN AGU, APG	ES	09/96 ▸ 05/99	1J0820805	•**813400**		**813700**	DCS17
1.8 i 20V, 1.8 i Turbo 20V 8L-Y-036430 ▸	E	1781	AGN/U, APG/P, AJQ AUM, AUQ, ARX AQA, ARY/Z	ES	09/99 ▸ 06/03	1J0820803K	•**813400**		**813700**	DCS17
1.9 TDi 8L-Y-036429 ▸	D	1896	AGR, ALH, AHF ASV	ES	09/96 ▸ 09/99	1J0820805	•**813400**		**813700**	DCS17
1.9 TDi	D	1896	ATD, ALH, ASZ AHF, ASV, AXR AGR	ES	10/99 ▸ 06/03	1J0820803K	•**813400**		**813700**	DCS17
A3 (2003>2008)										
1.4 TFSi	E	1390	CAXC	ES	09/07 ▸	1K0820803N	**699357**	1K0820859M	**699857**	DCS17E

• **New** Nouveau **Neu** Nuevo **Novo** Nuovo **Nieuw** Nowi **Новый** Novy **Nou** Yeni **Νέους**

MQ : Valeo Matching Quality Valeo gleichwertige Qualität **Valeo Calidad Equivalente**
Część Valeo o Jakości Porównywalnej z Oryginałem

Use technical code cross-list for precise selection page 648
Utiliser les pages Cross-List (page 648) pour identifier la bonne référence
Verwenden Sie die Code-Vergleichsliste zur gezielten Suche des adäquaten Bauteils, Seite 648
Utilizar la lista de códigos cruzados para una selección precisa, página 648
Utilizzare la crosslist dei codici tecnici per una scelta precisa, pag. 648
Gebruik de lijst met verwijzingen naar de technische 648 voor de juiste keuze, op pagina 648
U yj listy kodów technicznych Valeo na stronie 648 dla precyzyjnego doboru
A se folosi paginile crosslist ca sa identifiati referita corecta
Χρησιμοποιήστε την λίστα αντιστοιχίων κωδικών για να κάνετε σωστή και ακριβή επιλογή, σελίδα 648

		cc				OE NEW	Valeo NEW	OE ES	Valeo ES	
AUDI (.../...)										
A3 (2003>2008) (.../...)										
1.4 TFSi	E	1390	CAXC	ES	09/07 ▸ 06/08	1K0820808A		8J0260805	•**813838**	6SEU14C
1.6 i 8P-4-119 608 ▸	E	1595	BGU, BSE, BSF	ES	05/03 ▸	1K0820803L	**699357**	1K0820859M	**699857**	DCS17E
1.6 i	E	1595	BSE,BSF	ES	06/05 ▸ 06/08	1K0820808A		8J0260805	•**813838**	6SEU14C
1.6 FSI	E	1598	BAG, BLF, BLP	ES	08/03 ▸	1K0820803N	**699357**	1K0820803F	**699857**	DCS17E
1.6 FSi	E	1598	BLF	ES	01/05 ▸ 06/08	1K0820808A		8J0260805	•**813838**	6SEU14C
1.8 TFSi	E	1798	BYT,BZB	ES	01/07 ▸	1K0820859H		8J0260805	•**813838**	6SEU14C
2.0 FSI 16V	E	1984	AXW, AXX, BLR BLX, BLY, BMB BVY, BVZ, BWA	ES	05/03 ▸	1K0820803N	**699357**	1K0820803N	**699857**	DCS17E
2.0 FSi 16V	E	1984	AXX,BLR,BLY,BMB BVY,BVZ,BWA,CAWB	ES	09/04 ▸	1K0820808A		8J0260805	•**813838**	6SEU14C
3.2 i V6 24V	E	3189	BDB, BMJ	ES	07/03 ▸	1K0820803Q	**699357**	1K0820803S	**699857**	DCS17E
3.2 i V6 24V	E	3189	BDB,BUB	ES	07/03 ▸ 06/08	1K0820808A		8J0260805	•**813838**	6SEU14C
3.2 i V6 24V	E	3189	BDB,BMJ,BUB	ES	12/03 ▸	1K0820803Q	**699357**	1K0820859M	**699857**	DCS17E
1.9 TDi	D	1896	BKC, BLS, BXE	ES	01/04 ▸	1K0820803Q	**699357**	1K0820803S	**699857**	DCS17E
2.0 TDi 16V	D	1968	AZV, BKD, BMM BMN, BUY	ES	11/04 ▸	1K0820803N	**699357**	1K0820803S	**699857**	DCS17E
A3 (2008>)										
1.2 TFSi 16V	E	1197	CBZB	ES	04/10 ▸	1K0820859T		8J0260805	•**813838**	6SEU14C
1.4 TFSi 125 16V ▸ 8P-9A018 000	E	1390	CAXC	ES	07/08 ▸ 07/08	1K0820803N	**699357**	1K0820859M	**699857**	DCS17E
1.4 TFSi 16V	E	1390	CAXC	ES	07/08 ▸	1K0820808A		8J0260805	•**813838**	6SEU14C
1.6 i 102 ▸ 8P-9A018 000	E	1595	BSE,BSF,CCSA	ES	07/08 ▸ 05/10	1K0820803N	**699357**	1K0820859M	**699857**	DCS17E
1.6 i 102	E	1595	BSE,BSF,CCSA,CMXA	ES	07/08 ▸	1K0820859T		8J0260805	•**813838**	6SEU14C
1.8 TFSi 16V	E	1798	CDAA	ES	07/08 ▸	1K0820808A		8J0260805	•**813838**	6SEU14C
2.0 TFSi 16V	E	1984	BWA,CBFA,CCZA	ES	07/08 ▸	1K0820808A		8J0260805	•**813838**	6SEU14C
3.2 i V6 24V	E	3189	BUB	ES	07/08 ▸ 05/09	1K0820808A		8J0260805	•**813838**	6SEU14C
1.6 Tdi	D	1598	CAYB,CAYC	ES	05/09 ▸ 03/12	5N0820803C		8J0260805	•**813838**	6SEU14C
1.9 Tdi	D	1896	BLS/F,BXE	ES	07/08 ▸	1K0820803N	**699357**	1K0820859F	**699857**	DCS17E
1.9 Tdi	D	1896	BLS/F,BXE	ES	07/08 ▸	5N0820803C		8J0260805	•**813838**	6SEU14C
2.0 TDi 16V	D	1968	CBAA/F,CBAB/F CBBB/F	ES	07/08 ▸ 05/10	1K0820803N	**699357**	1K0820859F	**699857**	DCS17E
2.0 Tdi	D	1968	CBAA/F,CBAB/F CBBB/F,CFFA,CFFB CFGB,CLJA	ES	07/08 ▸ 03/12	5N0820803		8J0260805	•**813838**	6SEU14C
A3 CABRIOLET (2008>)										
1.2 TSi 105	E	1197	CBZB	ES	03/10 ▸	1K0820859T		8J0260805	•**813838**	6SEU14C
1.4 TSi 125	E	1390	CAXC	ES	02/11 ▸	1K0820859T		8J0260805	•**813838**	6SEU14C
1.6 i 102 16V	E	1595	BSE	ES	09/08 ▸ 05/10	1K0820859T		8J0260805	•**813838**	6SEU14C
1.8 TFSi 160 16V	E	1798	BZB	ES	04/08 ▸	1K0820803N	**699357**	1K0820859M	**699857**	DCS17E
1.8 TFSi 160 16V	E	1798	BZB,CDAA	ES	04/08 ▸	1K0820859N		8J0260805	•**813838**	6SEU14C
2.0 TFSi 200 16V	E	1984	CAWB	ES	04/08 ▸	1K0820803N	**699357**	1K0820859M	**699857**	DCS17E
2.0 TFSi 200 16V	E	1984	CAWB,CCZA	ES	04/08 ▸	1K0820859P		8J0260805	•**813838**	6SEU14C
1.6 TDi CR 105	D	1598	CAYC	ES	05/09 ▸	5N0820803C		8J0260805	•**813838**	6SEU14C
1.9 TDi 105	D	1896	BLS/F	ES	04/08 ▸ 10/09	1K0820803N	**699357**	1K0820859F	**699857**	DCS17E
1.9 TDi 105	D	1896	BLS/F	ES	04/08 ▸ 10/09	5N0820803C		8J0260805	•**813838**	6SEU14C
2.0 Tdi 16V	D	1968	CBAA/F,CBAB/F	ES	04/08 ▸ 05/10	1K0820803N	**699357**	1K0820859F	**699857**	DCS17E
2.0 TDi 16V	D	1968	CBAA/F,CBAB/F CFFA,CFFB	ES	04/08 ▸	5N0820803C		8J0260805	•**813838**	6SEU14C
A4 (94>2000)										
1.6 i	E	1595	ADP	ES	11/94 ▸ 07/96	8D0260805F	**699222**		**699722**	DCW17D
1.6 i	E	1595	ADP	ES	07/96 ▸ 10/96	8D0260805M	**699222**		**699722**	DCW17D

You must replace the receiver drier with the compressor
Vous devez remplacer la bouteille déshydratante avec le compresseur
Tauschen Sie den Trockner mit dem Kompressor
Es obligatorio cambiar el Filtro Deshidratante con el Compresor
Tem de substituir o filtro desidratante com o compressor
E' necessario cambiare il filtro disidratatore con il compressore
U moet de filterdroger samen met de compressor vervangen

Musisz wymienić filtr osuszacz przy wymianie sprę arki
Рекомендируем замену осушителя вместо с компрессором
Při výměně kompresoru je nutné vyměnit také vysoušeč
Nu untați sa schimbați uscatorul cu compresorul
Kompresörle birlikte nem alıcıyı da değiştirin
Πρέπει να αντικαταστήσετε το φίλτρο υγρού μαζί με το συμπιεστή

		cc				OE NEW	Valeo NEW	OE ES	Valeo ES	

AUDI (.../...)

A4 (94>2000) (.../...)

1.6 i	E	1595	AHL, ANA, ARM	ES	10/96 ▸ 11/00	8D0260805J	**699376** ⊃MQ	8D0260805RX	•**699876**	7SBU16C
1.8 i, 1.8 i 20V **1.8 i Turbo 20V**	E	1781	ADR, AEB, AFY	ES	11/94 ▸ 07/96	8D0260805F	**699222**		**699722**	DCW17D
1.8 i, 1.8 i 20V **1.8 i Turbo 20V**	E	1781	ADR, AEB, AFY AJL, ANB, APT/U ARG/K, AWT	ES	07/96 ▸ 11/00	8D0260805M	**699222**		**699722**	DCW17D
2.4 i V6, 2.4 i V6 30V	E	2393	AFM, AGA, AJG ALF, AML, APS APZ, ARJ		01/97 ▸ 12/98	4B0260805B	**813166**			7SBU16C
2.6 i V6	E	2598	ABC, ACZ		10/95 ▸ 07/98	4B0260805B	**813166**			7SBU16C
2.6 i V6	E	2598	ABC	ES	08/97 ▸ 07/98	8D0260805J	**699376**		•**699876**	7SBU16C
2.8 i V6	E	2771	AAH	ES	11/94 ▸ 07/97	8D0260805M	**699222**		**699722**	DCW17D
1.9 TDi	D	1896	1Z, AFF, AFN, AHH AHU, AVG	ES	11/94 ▸ 11/00	8D0260805M	**699222**		**699722**	DCW17D
1.9 TDi	D	1896	AHH		08/97 ▸ 12/98	4B0260805B	**813166**			7SBU16C
1.9 TDi	D	1896	AJM, ATJ	ES	07/99 ▸ 11/00	8D0260805J	**699376** ⊃MQ	8D0260805B	•**699876**	7SBU16C
2.5 TDi V6	D	2496	AFB, AKN	ES	11/97 ▸ 11/00	4B0260805C	**699275** ⊃MQ		**699775**	7SBU16C
2.7 i V6 30V	E	2671	AGB		02/99 ▸ 10/00	4B0260805B	**813166**			7SBU16C
2.8 i V6 30V	E	2771	AMX, APR, AQD ATX		01/99 ▸ 09/01	4B0260805B	**813166**			7SBU16C

A4 (2000>2004)

1.6 i ▸ 8E-3-285 000	E	1595	ALZ		12/00 ▸ 01/03	8E0260805G	**813190**			6SEU12C
1.6 i	E	1595	ALZ		02/03 ▸ 12/04	8E0260805BF	**813150**			6SEU14C
1.6 i 8E-3-285 001 ▸ 8E-4-237 000	E	1595	ALZ	ES	01/03 ▸ 03/04	8E0260805AF		8E0260805AF	•**813837**	6SEU12C
1.6 i	E	1595	ALZ	ES	12/00 ▸ 12/04	8E0260805G	**813190**		•**813690**	6SEU12C
1.8 i Turbo 20V ▸ 8E-3-285 000	E	1781	AMB, AVJ, BEX BFB		12/00 ▸ 01/03	8E0260805G	**813190**			6SEU12C
1.8 i Turbo 20V 8E-4-237 001 ▸	E	1781	BEX, BFB		02/03 ▸ 12/04	8E0260805BF	**813150**			6SEU14C
1.8 i Turbo 20V	E	1781	AMB,AVJ,BEX,BFB	ES	12/00 ▸ 12/04	8E0260805G	**813190**		•**813690**	6SEU12C
1.8 i Turbo 20V 8E-4-237 001 ▸	E	1781	BEX,BFB	ES	11/02 ▸ 12/04	8E0260805BJ	**813150**		•**813650**	6SEU14C
1.8 i Turbo 20V	E	1781	AMB	ES	09/01 ▸ 06/02	8E0260805AB	**699380**	8E0260805	•**699880**	7SEU16C
1.8 i Turbo 20V 8E-3-285 000 ▸ 8E-4-237 000	E	1781	AMB,BEX,BFB	ES	07/02 ▸ 03/04	8E0260805AF		8E0260805AF	•**813837**	6SEU12C
2.0 FSI, 2.0 i 20V ▸ 8E-3-285 000	E	1984	ALT, AWA		12/00 ▸ 01/03	8E0260805G	**813190**			6SEU12C
2.0 FSI, 2.0 i 20V 8E-4-237 001 ▸	E	1984	ALT, AWA		02/03 ▸ 12/04	8E0260805BF	**813150**			6SEU14C
2.0 FSI,2.0 i 20V 8E-3-285 001 ▸ 8E-4-237 000	E	1984	ALT,AWA	ES	01/03 ▸ 03/04	8E0260805AF		8E0260805AF	•**813837**	6SEU12C
2.0 FSI,2.0 i 20V	E	1984	ALT,AWA	ES	12/00 ▸ 12/04	8E0260805G	**813190**		•**813690**	6SEU12C
2.0 FSI,2.0 i 20V 8E-4-237 001 ▸	E	1984	ALT,AWA	ES	03/04 ▸ 12/04	8E0260805BJ	**813150**		•**813650**	6SEU14C
2.4 i V6 30V	E	2393	AMM,BDV	ES	09/01 ▸ 12/04	8E0260805G	**813190**		•**813690**	6SEU12C
3.0 i 30V,3.0 i V6 30V	E	2976	ASN,AVK,BBJ	ES	12/00 ▸ 12/04	8E0260805G	**813190**		•**813690**	6SEU12C
1.9 TDi ▸ 8E-3-285 000	D	1896	AVB, AVF, AWX		12/00 ▸ 01/03	8E0260805AB	**699380**			7SEU16C
1.9 TDi 8E-4-000 001 ▸	D	1896	AVB, AVF, BKE	ES	06/03 ▸ 12/04	8E0260805BF	**813150**		•**813650**	6SEU14C
1.9 TDi	D	1896	AVB,AVF,AWX	ES	12/00 ▸ 12/04	8E0260805D	**813190**		•**813690**	6SEU12C

• **New** Nouveau **Neu** Nuevo **Novo** Nuovo **Nieuw** Nowi **Новый** Novy **Nou** Yeni **Νέους**

⊃MQ : **Valeo Matching Quality** Valeo gleichwertige Qualität **Valeo Calidad Equivalente**
Część Valeo o Jakości Porównywalnej z Oryginałem

Use technical code cross-list for precise selection page 648
Utiliser les pages Cross-List (page 648) pour identifier la bonne référence
Verwenden Sie die Code-Vergleichsliste zur gezielten Suche des adäquaten Bauteils, Seite 648
Utilizar la lista de códigos cruzados para una selección precisa, página 648
Utilizzare la crosslist dei codici tecnici per una scelta precisa, pag. 648
Gebruik de lijst met verwijzingen naar de technische 648 voor de juiste keuze, op pagina 648
U yj listy kodów technicznych Valeo na stronie 648 dla precyzyjnego doboru
A se folosi paginile crosslist ca sa identifiati referita corecta
Χρησιμοποιήστε την λίστα αντιστοιχίων κωδικών για να κάνετε σωστή και ακριβή επιλογή, σελίδα 648

		CC				OE NEW	Valeo NEW	OE ES	Valeo ES	
AUDI (.../...)										
A4 (2000>2004) (.../...)										
1.9 TDi ▸8E-3-285 000	D	1896	AVB,AVF,AWX	ES	12/00 ▸ 12/04	8E0260805AB	**699380**	8E0260805	•**699880**	7SEU16C
2.5 TDi V6 24V ▸8E-3-285 000	D	2496	AKE, AYM, BDH BFC		12/00 ▸ 01/03	8E0260805C	**699381**			6SEU12C
A4 (2004>)										
1.6 i ▸8E-5-475 000	E	1595	ALZ	ES	11/04 ▸ 03/06	8E0260805BF	**813150**		•**813650**	6SEU14C
1.8 i Turbo 20V ▸8E-5-475 501 ▸	E	1781	BFB	ES	11/04 ▸	8E0260805BF	**813150**		•**813650**	6SEU14C
2.0 TFSI 16V, 2.0 i 20V ▸8E-5-475 501 ▸	E	1984	ALT, BGB	ES	11/04 ▸	8E0260805BF	**813150**		•**813650**	6SEU14C
2.0 TFSI 16V ▸8E-5-475 500	E	1996	BUL	ES	11/04 ▸ 03/06	8E0260805BF	**813150**		•**813650**	6SEU14C
1.9 TDi ▸8e-5-475 000	D	1896	BKE, BRB	ES	11/04 ▸	8E0260805BF	**813150**		•**813650**	6SEU14C
2.0 TDi, 2.0 TDi 16V ▸8E-5-475 501 ▸	D	1968	BLB, BNA, BPW BRE/F, BVF/G	ES	11/04 ▸	8E0260805BF	**813150**		•**813650**	6SEU14C
2.7 TDi V6 24V ▸8E-6-230 001 ▸	D	2698	BPP,BSG	ES	11/05 ▸	8E0260805BL	**813150**		•**813650**	6SEU14C
3.0 TDi V6 24V ▸8E-6-230 001 ▸	D	2967	ASB,BKN	ES	11/04 ▸	8E0260805CD	**813150**		•**813650**	6SEU14C
A4 CABRIOLET (2002>2005)										
1.8 i Turbo 20V ▸8H-3-026 000	E	1781	BFB	ES	07/02 ▸ 01/03	8E0260805G	**813190**		•**813690**	6SEU12C
1.8 i Turbo 20V ▸8E-4-237 001 ▸	E	1781	BFB	ES	02/03 ▸	8E0260805BF	**813150**		•**813650**	6SEU14C
1.8 i Turbo 20V ▸8H-4-028 000	E	1781	BFB	ES	01/03 ▸ 12/05	8E0260805AF		8E0260805AF	•**813837**	6SEU12C
2.0 i 20V	E	1984	ALT	ES	11/04 ▸ 12/05	8E0260805BF	**813150**		•**813650**	6SEU14C
2.5 TDI V6 ▸8H-3-026 000	D	2496	BFC		08/02 ▸ 01/03	8E0260805C	**699381**			6SEU12C
A4 CABRIOLET II (2006>)										
1.8 i Turbo 20V	E	1781	BFB		01/06 ▸	8E0260805BF	**813150**			6SEU14C
2.0 TFSI 16V	E	1984	BWE		01/06 ▸	8E0260805BF	**813150**			6SEU14C
2.0 TDi	D	1968	BPW, BRC		01/06 ▸	8E0260805BF	**813150**			6SEU14C
A4 (2007>)										
1.8 TFSi 16V	E	1798	CABA,CABB,CDHA CDHB	ES	11/07 ▸	8K0260805L		8K0260805L	•**813835**	6SEU14C
2.0 TFSi 16V	E	1984	CDNB,CDNC,CFKA	ES	06/08 ▸	8K0260805L		8K0260805L	•**813835**	6SEU14C
2.0 TFSi Fuel 16V	F	1984	CFKA	ES	05/09 ▸ 01/12	8K0260805L		8K0260805L	•**813835**	6SEU14C
2.0 TDi 16V	D	1968	CAGA,CAGB/F CAGC/F,CAHA/F CAHB/F,CJCB,CMEA	ES	11/07 ▸	8K0260805E		8K0260805L	•**813835**	6SEU14C
A5 (2007>2012)										
1.8 TFSi 16V	E	1798	CABD,CDHB	ES	10/07 ▸	8K0260805E		8K0260805L	•**813835**	6SEU14C
2.0 TFSI 16V	E	1984	CDNB,CDNC	ES	06/08 ▸ 02/12	8K0260805L		8K0260805L	•**813835**	6SEU14C
2.0 TDi 16V	D	1968	CAGA,CAGB/F CAHA/F,CAHB/F CMEA	ES	01/08 ▸ 02/12	8K0260805L		8K0260805L	•**813835**	6SEU14C
A5 CABRIOLET (2009>)										
1.8 TFSI	E	1798	CDHB	ES	09/09 ▸	8K0260805L		8K0260805L	•**813835**	6SEU14C

You must replace the receiver drier with the compressor
Vous devez remplacer la bouteille déshydratante avec le compresseur
Tauschen Sie den Trockner mit dem Kompressor
Es obligatorio cambiar el Filtro Deshidratante con el Compresor
Tem de substituir o filtro desidratante com o compressor
E' necessario cambiare il filtro disidratatore con il compressore
U moet de filterdroger samen met de compressor vervangen
Musisz wymienić filtr osuszacz przy wymianie sprę arki
Рекомендируем замену осушителя вместо с компрессором
Při výměně kompresoru je nutné vyměnit také vysoušeč
Nu untați sa schimbați uscatorul cu compresorul
Kompresörle birlikte nem alıcıyı da değiştirin
Πρέπει να αντικαταστήσετε το φίλτρο υγρού μαζί με το συμπιεστή

		cc				OE NEW	Valeo NEW	OE ES	Valeo ES	
AUDI (.../...)										
A5 CABRIOLET (2009>) (.../...)										
2.0 TFSI	E	1984	CAEB,CDNB,CDNC	ES	03/09 ▸	8K0260805L		8K0260805L	•**813835**	6SEU14C
3.2 FSI	E	3197	CALA	ES	03/09 ▸	8K0260805E		8K0260805L	•**813835**	6SEU14C
2.0 TDI	D	1968	CAHA,CAHA/F,CAHB CAHB/F	ES	05/09 ▸	8K0260805L		8K0260805L	•**813835**	6SEU14C
2.7 TDI	D	2698	CGKA/F	ES	03/09 ▸	8K0260805E		8K0260805L	•**813835**	6SEU14C
A6 (94>97)										
2.3 E, 2.3 i	E	2309	AAR	ES	07/94 ▸ 09/97	4A0260805AH			**699727**	DCW17D
2.4 i V6 ▸ 4AT046054	E	2393	AFM	ES	07/95 ▸ 12/95	4A0260805AH			**699727**	DCW17D
2.4 i V6 4AT046055 ▸	E	2393	AFM		12/95 ▸ 09/97	4B0260805B	**813166**			7SBU16C
2.6 E V6 ▸ 4AT046054	E	2598	ABC, ACZ	ES	06/94 ▸ 12/95	4A0260805AH			**699727**	DCW17D
2.6 E V6 4AT046055 ▸	E	2598	ABC, ACZ		12/95 ▸ 09/97	4B0260805B	**813166**			7SBU16C
2.8 E V6, 2.8 E V6 30V 2.8 i V6 ▸ 4AT046054	E	2771	AAH, ACK, AEJ	ES	06/94 ▸ 12/95	4A0260805AH			**699727**	DCW17D
2.8 E V6, 2.8 E V6 30V 2.8 i V6 4AT046055 ▸	E	2771	AAH, ACK, AEJ		12/95 ▸ 09/97	4B0260805B	**813166**			7SBU16C
2.5 TDi	D	2460	AAT, AEL	ES	07/94 ▸ 09/97	4A0260805AH			**699727**	DCW17D
A6 (97>2001)										
1.8 i 20V, 1.8 i Turbo 20V	E	1781	AEB, AFY, AJL/P ANB, APU, AQE ARH/K, AWT	ES	04/97 ▸ 10/00	8D0260805M	**699222**		**699722**	DCW17D
1.8 i 20V, 1.8 i Turbo 20V	E	1781	AEB, AFY, AJL/P ANB, APU, AQE ARH, AWT	ES	01/99 ▸ 10/00	8D0260805J	**699376** ⊃MQ		•**699876**	7SBU16C
2.4 i V6, 2.4 i V6 30V	E	2393	AGA, AJG, ALF/W AML/M, APC/S APZ, ARJ/N, ASM	ES	04/97 ▸ 05/01	4B0260805B	**813166**		•**699876**	7SBU16C
2.7 i V6 Bi Turbo	E	2671	AJK, AZA		01/98 ▸ 05/01	4B0260805B	**813166**			7SBU16C
2.8 i V6 30V	E	2771	ACK, ALG, AMX APR, AQD, ATX		04/97 ▸ 05/01	4B0260805B	**813166**			7SBU16C
2.8 i V6 30V ▸ 4B-1-068 908	E	2771	AMX,AQD	ES	09/99 ▸ 10/00	8D0260805J	**699376**		•**699876**	7SBU16C
4.2 i V8 40V	E	4172	ARS, ASG		04/99 ▸ 05/01	4B0260805B	**813166**			7SBU16C
1.9 TDi	D	1896	AFN, AJM, AVG	ES	04/97 ▸ 05/01	8D0260805M	**699222**		**699722**	DCW17D
1.9 TDi	D	1896	AJM		01/98 ▸ 05/01	4B0260805B	**813166**			7SBU16C
1.9 TDi	D	1896	AFN, AJM, AVG	ES	08/99 ▸ 05/01	8D0260805J	**699376** ⊃MQ		•**699876**	7SBU16C
2.5 TDi V6	D	2496	AFB, AKE, AKN	ES	04/97 ▸ 05/01	4B0260805C	**699275** ⊃MQ		**699775**	7SBU16C
A6 (2001>2004)										
1.8 i Turbo 20V	E	1781	AWT	ES	06/01 ▸ 04/05	8D0260805P	**699376**		•**699876**	7SBU16C
2.4 i V6 30V	E	2393	AMM, ASM, BDV		06/01 ▸ 04/05	4B0260805B	**813166**			7SBU16C
2.7 i V6 Bi Turbo	E	2671	ARE, BES		06/01 ▸ 04/05	4B0260805B	**813166**			7SBU16C
4.2 i V8 40V	E	4172	ASG		06/01 ▸ 04/05	4B0260805B	**813166**			7SBU16C
1.9 TDi ▸ 4B-2-095 000	D	1896	AVF, AWX	ES	06/01 ▸ 01/05	4B0260805M	**699380**	8E0260805	•**699880**	7SEU16C
2.5 TDi V6 24V	D	2496	AKE,AYM,BAU,BCZ BDG,BDH,BFC	ES	06/01 ▸ 04/05	4B0260805J		4B0260805J	•**813836**	6SEU12C

• **New** Nouveau **Neu** Nuevo **Novo** Nuovo **Nieuw** Nowi **Новый** Novy **Nou** Yeni **Νέους**

⊃MQ : **Valeo Matching Quality** Valeo gleichwertige Qualität **Valeo Calidad Equivalente** Część Valeo o Jakości Porównywalnej z Oryginałem

Use technical code cross-list for precise selection page 648
Utiliser les pages Cross-List (page 648) pour identifier la bonne référence
Verwenden Sie die Code-Vergleichsliste zur gezielten Suche des adäquaten Bauteils, Seite 648
Utilizar la lista de códigos cruzados para una selección precisa, página 648
Utilizzare la crosslist dei codici tecnici per una scelta precisa, pag. 648
Gebruik de lijst met verwijzingen naar de technische 648 voor de juiste keuze, op pagina 648
U yj listy kodów technicznych Valeo na stronie 648 dla precyzyjnego doboru
A se folosi paginile crosslist ca sa identifiati referita corecta
Χρησιμοποιήστε την λίστα αντιστοιχίων κωδικών για να κάνετε σωστή και ακριβή επιλογή, σελίδα 648

		CC				OE NEW	Valeo NEW	OE ES	Valeo ES	
AUDI (.../...)										
A6 (2004>2008)										
2.0 TFSi 16V 4F-7-000 001 ▸	E	1984	BPJ	ES	06/06 ▸	4F0260805T		8K0260805L	•**813835**	6SEU14C
2.0 TFSi 16V 4F-6-145 001 ▸ 4F-6-250 000	E	1984	BPJ	ES	06/05 ▸ 05/06	4F0260805P	**813150**		•**813650**	6SEU14C
2.0 TDi 16V	D	1968	BLB,BNA,BRE,BRF BVG	ES	07/04 ▸ 09/08	4F0260805P	**813150**		•**813650**	6SEU14C
2.7 TDi V6 24V 4F-7-140 501 ▸ 4F-8-047 500	D	2698	BPP,BSG	ES	11/04 ▸ 09/08	4F0260805AC	**813150**		•**813650**	6SEU14C
3.0 TDi V6 24V ▸ 4-F-7-140 50	D	2967	ASB,BMK,BNG	ES	04/04 ▸	4F0260805AG	**813150**		•**813650**	6SEU14C
A6 (2008>)										
2.0 TFSI 16V	E	1984	BPJ	ES	10/08 ▸	4F0260805AE		8K0260805L	•**813835**	6SEU14C
A8 (94>2002)										
2.8 E V6, 2.8 E V6 30V ▸ 4D-T-003000	E	2771	AAH, ACK, AEJ	ES	06/94 ▸ 09/95	4A0260805AH			**699727**	DCW17D
2.8 E V6, 2.8 E V6 30V 2.8 i V6	E	2771	ACK, AEJ, ALG AMX, APR, AQD		09/95 ▸ 09/02	4B0260805B	**813166**			7SBU16C
3.7 i V8	E	3697	AEW, AKC, AKJ AQG		04/96 ▸ 09/02	4B0260805B	**813166**			7SBU16C
4.2 i V8, 4.2 i V8 32V	E	4172	ABZ, AEM, AKG AQF, ARU, AUW		09/95 ▸ 09/02	4B0260805B	**813166**			7SBU16C
6.0 i W12 48V	E	6005	AZC	ES	03/01 ▸ 09/02	4B0260805M	**699380**	8E0260805	•**699880**	7SEU16C
2.5 TDi V6	D	2496	AFB, AKE, AKN	ES	06/97 ▸ 09/02	4B0260805C	**699275** ⊃MQ		**699775**	7SBU16C
3.3 TDi V8	D	3328	AKF		12/99 ▸ 09/02	4B0260805B	**813166**			7SBU16C
A8 (2002>2007)										
3.0 TDi V6 24V ▸ 4E-4-018 715	D	2967	BNG	ES	11/03 ▸ 01/04	4E0260805J	**813150**		•**813650**	6SEU14C
CABRIOLET										
1.8 E 20V	E	1781	ADR	ES	04/97 ▸ 08/00	8D0260805F	**699222**		**699722**	DCW17D
2.6 E V6	E	2598	ABC, ACZ	ES	01/94 ▸ 08/00	4A0260805AH			**699727**	DCW17D
2.8 E V6	E	2771	AAH	ES	11/92 ▸ 08/00	4A0260805AH			**699727**	DCW17D
COUPE (88>96)										
2.6 E V6	E	2598	ABC	ES	08/92 ▸ 01/96	4A0260805AH			**699727**	DCW17D
2.8 E V6 88P002762 ▸	E	2771	AAH	ES	07/94 ▸ 05/95	4A0260805AH			**699727**	DCW17D
Q5										
2.0 TFSI 16V	E	1984	CDNC	ES	11/08 ▸	8K0260805L		8K0260805L	•**813835**	6SEU14C
2.0 TDI 16V	D	1968	CAHA/F,CAHB/F	ES	11/08 ▸	8K0260805L		8K0260805L	•**813835**	6SEU14C
RS4										
2.7 i V6 Bi Turbo 30V	E	2671	ASJ		06/00 ▸ 10/00	4B0260805B	**813166**			7SBU16C
2.8 i V6 Bi Turbo 30V	E	2771	AZR		11/00 ▸ 09/01	4B0260805B	**813166**			7SBU16C
RS6										
4.2 i V8 40V	E	4172	BCY		07/02 ▸ 04/04	4B0260805B	**813166**			7SBU16C
S3 (98>2003)										
1.8 i Turbo 20V	E	1781	AMK, APY, AUL BAM	ES	11/98 ▸ 06/03	1J0820803K	**813200** ⊃MQ		**813700**	SD7V16

You must replace the receiver drier with the compressor
Vous devez remplacer la bouteille déshydratante avec le compresseur
Tauschen Sie den Trockner mit dem Kompressor
Es obligatorio cambiar el Filtro Deshidratante con el Compresor
Tem de substituir o filtro desidratante com o compressor
E' necessario cambiare il filtro disidratatore con il compressore
U moet de filterdroger samen met de compressor vervangen
Musisz wymienić filtr osuszacz przy wymianie sprę arki
Рекомендируем замену осушителя вместо с компрессором
Při výměně kompresoru je nutné vyměnit také vysoušeč
Nu untați sa schimbați uscatorul cu compresorul
Kompresörle birlikte nem alıcıyı da değiştirin
Πρέπει να αντικαταστήσετε το φίλτρο υγρού μαζί με το συμπεστή

		cc				OE NEW	Valeo NEW	OE ES	Valeo ES	
AUDI (.../...)										
S3 (98>2003) (.../...)										
1.8 i Turbo 20V	E	1781	APY, AMK, BAM	ES	11/98 ▸ 06/03	1J0820803K	•**813400**		**813700**	DCS17
1.8 i Turbo 20V	E	1800	AUL	ES	09/99 ▸ 04/01	1J0820803K	•**813400**		**813700**	DCS17
S3 (2006>)										
2.0 TFSI 16V	E	1984	BHZ		10/06 ▸	1K0820803N	**699357**			DCS17E
2.0 TFSi 16V	E	1984	BHZ,BZC	ES	10/06 ▸	1K0820808A		8J0260805	•**813838**	6SEU14C
S4 (99>2001)										
2.7 i V6 30V	E	2671	AGB		02/99 ▸ 09/01	4B0260805B	**813166**			7SBU16C
2.7 i V6 30V	E	2671	AGB	ES	02/99 ▸ 09/01	8E0260805G	**813190**		•**813690**	6SEU12C
S6 (94>97)										
2.2 Turbo 20V **2.2 i Turbo 20V**	E	2226	AAN	ES	07/94 ▸ 07/97	4A0260805AH			**699727**	DCW17D
S6 (99>2005)										
4.2 i V8 40V	E	4172	ANK, AQJ		09/99 ▸	4B0260805B	**813166**			7SBU16C
S8 (96>2002)										
4.2 i V8	E	4172	AHC, AKH, AQH AVP, AYS, BCS		09/96 ▸ 09/02	4B0260805B	**813166**			7SBU16C
TT (98>2006)										
1.8 i Turbo 20V	E	1781	AJQ, APP/X, ARY AUM/Q, BAM	ES	10/98 ▸	1J0820803K	**813200** ⊃MQ		**813700**	SD7V16
TT										
1.8 i Turbo 20V ▸ 8N-Y-030000	E	1781	APP, AJQ, APX AUM, ARY, AUQ BAM	ES	10/98 ▸	1J0820805	•**813400**		**813700**	DCS17
1.8 i Turbo 20V 8N-Y-030001 ▸	E	1781	BAM, ARY, AUQ AJQ, APX, AUM APP	ES	09/99 ▸	1J0820803K	•**813400**		**813700**	DCS17
TT (98>2006)										
3.2 i V6	E	3189	BHE	ES	04/03 ▸	1J0820803K	**813200** ⊃MQ		**813700**	SD7V16
TT										
3.2 i V6	E	3189	BHE	ES	04/03 ▸	1J0820803K	•**813400**		**813700**	DCS17
TT (2006>)										
1.8 TFSi 16V	E	1798	CDAA	ES	06/08 ▸	1K0820808A		8J0260805	•**813838**	6SEU14C
2.0 TFSi 16V	E	1984	BWA,CCZA,CDLA CDLB	ES	08/06 ▸	1K0820808A		8J0260805	•**813838**	6SEU14C
3.2 i V6 24V	E	3189	BUB	ES	08/06 ▸	1K0820859T		8J0260805	•**813838**	6SEU14C
BMW										
3 SERIES E36										
316i	E	1596	M43B16	ES	09/93 ▸ 04/01			64528385714	**699546**	SS96D1
318i, 318iS, 318ti	E	1796	M42B18, M43B18	ES	01/92 ▸ 02/00			64528385714	**699546**	SS96D1
316i 1.9, 318iS, 318ti	E	1895	M43B/19-E46/19-E46G M44B/19	ES	12/95 ▸ 04/01			64528385714	**699546**	SS96D1
320i	E	1991	M50B20, M52B20	ES	12/90 ▸ 02/00	64528390741	**699051**	64528385915	**699551**	10PA17C
323i, 323ti, 325i	E	2494	M50B/25, M52B/25 M52B25-EU3	ES	12/90 ▸ 04/01	64528390741	**699051**	64528385915	**699551**	10PA17C

• **New** Nouveau **Neu** Nuevo **Novo** Nuovo **Nieuw** Nowi **Новый** Novy **Nou** Yeni **Νέους**

⊃MQ : **Valeo Matching Quality** Valeo gleichwertige Qualität **Valeo Calidad Equivalente**
Część Valeo o Jakości Porównywalnej z Oryginałem

Use technical code cross-list for precise selection page 648
Utiliser les pages Cross-List (page 648) pour identifier la bonne référence
Verwenden Sie die Code-Vergleichsliste zur gezielten Suche des adäquaten Bauteils, Seite 648
Utilizar la lista de códigos cruzados para una selección precisa, página 648
Utilizzare la crosslist dei codici tecnici per una scelta precisa, pag. 648
Gebruik de lijst met verwijzingen naar de technische 648 voor de juiste keuze, op pagina 648
U yj listy kodów technicznych Valeo na stronie 648 dla precyzyjnego doboru
A se folosi paginile crosslist ca sa identifiati referita corecta
Χρησιμοποιήστε την λίστα αντιστοιχίων κωδικών για να κάνετε σωστή και ακριβή επιλογή, σελίδα 648

						OE NEW	Valeo NEW	OE ES	Valeo ES	
		cc								
BMW (.../...)										
3 SERIES E36 (.../...)										
328i	E	2793	M52B28	ES	01/95 ▸ 02/00	64528390741	**699051**	64528385915	**699551**	10PA17C
318tds	D	1665	M41D	ES	09/94 ▸ 04/01			64528385714	**699546**	SS96D1
325td, 325tds	D	2497	M51A, M51D25	ES	08/91 ▸ 09/99	64528391135	**699148** ⊃MQ	64528385914	**699648**	10PA17C
325td, 325tds	D	2497	M51A, M51D25		08/91 ▸ 09/99	64528371021	**699322**			10PA17C
3 SERIES E46										
320Ci, 320i	E	1991	M52B20-EU3		03/98 ▸ 03/00	64526910458	**813151**			7SBU16C
320CI, 320i	E	2171	M54B22		07/00 ▸	64526910458	**813151**			7SBU16C
320Ci,320i	E	2171	M54B22	ES	07/00 ▸ 07/06	64526936883		64526916232	•**813833**	7SBU16C
323Ci, 323i, 325Ci, 325i 325ti, 325xi	E	2494	M52B25-EU3 M54B/25/25-6S5		03/98 ▸	64526910458	**813151**			7SBU16C
325Ci,325i,325ti,325xi	E	2494	M54B/25/25-6S5	ES	07/00 ▸ 05/06	64526916232		64526916232	•**813833**	7SBU16C
328Ci, 328i	E	2793	M52B28-EU3		03/98 ▸ 03/00	64526910458	**813151**			7SBU16C
330Ci, 330i, 330xi	E	2979	M54B/30-231/30		04/00 ▸	64526910458	**813151**			7SBU16C
330Ci,330i,330xi	E	2979	M54B30	ES	04/00 ▸ 08/06	64526916232		64526916232	•**813833**	7SBU16C
5 SERIES E34										
520i	E	1991	M50B20	ES	03/90 ▸ 09/96	64528390741	**699051**	64528385915	**699551**	10PA17C
525i, 525iX	E	2494	M50B25	ES	03/90 ▸ 09/96	64528390741	**699051**	64528385915	**699551**	10PA17C
530i	E	2997	M60B30	ES	09/92 ▸ 09/96	64528390743		64528385908	**699653**	10PA17C
540i	E	3982	M60B40	ES	09/92 ▸ 09/96	64528390743		64528385908	**699653**	10PA17C
525td, 525tds	D	2497	M51A, M51D25	ES	08/91 ▸ 09/96	64528391135	**699148** ⊃MQ	64528385914	**699648**	10PA17C
5 SERIES E39										
523i	E	2494	M52B25	ES	09/95 ▸ 09/97	64526914370	**699323** ⊃MQ		**699823**	7SBU16C
523i	E	2494	M52B25		09/97 ▸ 04/04	64526910458	**813151**			7SBU16C
535i	E	3498	M62B/35-245/35		07/96 ▸ 04/03	64526910460	**699321**			7SB16C
540i	E	4398	M62B/44/44-285		07/96 ▸ 04/04	64526910460	**699321**			7SB16C
525tds	D	2497	M51D25		10/95 ▸ 04/04	64528377242	**699320** ⊃MQ			7SBU16C
5 SERIES E60										
520i	E	2171	M54B22		05/03 ▸ 03/05	64526917859	**813194**			7SEU17C
525i	E	2494	M54B25-6S5		09/03 ▸ 02/05	64526917859	**813194**			7SEU17C
530i	E	2979	M54B30-231		05/03 ▸ 02/05	64526917859	**813194**			7SEU17C
525d	D	2497	M57D25TU		05/03 ▸ 10/05	64526917859	**813194**			7SEU17C
530d, 530xd, 535d	D	2993	M57D/30TU/30TU2		05/03 ▸ 12/06	64526917859	**813194**			7SEU17C
5 SERIES E60/61 LCI										
3.0 d 24V	D	2993	M57D/30U2/30O2		01/07 ▸	64526917859	**813194**			7SEU17C
7 SERIES E32										
730i	E	2997	M60B30	ES	04/92 ▸ 05/94	64528390743		64528385908	**699653**	10PA17C
740i	E	3982	M60B40	ES	09/92 ▸ 05/94	64528390743		64528385908	**699653**	10PA17C
7 SERIES E38										
728i	E	2793	M52B/28/28-EU3	ES	07/95 ▸ 08/01	64526914370	**699323** ⊃MQ		**699823**	7SBU16C
730i	E	2997	M60B30	ES	06/94 ▸ 09/97			64528385917	**699650**	10PA17C
735i	E	3498	M62B35	ES	04/96 ▸ 09/97			64528385917	**699650**	10PA17C
740i	E	3982	M60B40	ES	06/94 ▸ 03/96			64528385917	**699650**	10PA17C
740i	E	4398	M62B44	ES	04/96 ▸ 09/97			64528385917	**699650**	10PA17C
740i	E	4398	M62B44		09/97 ▸ 04/00	64526910460	**699321**			7SB16C

You must replace the receiver drier with the compressor
Vous devez remplacer la bouteille déshydratante avec le compresseur
Tauschen Sie den Trockner mit dem Kompressor
Es obligatorio cambiar el Filtro Deshidratante con el Compresor
Tem de substituir o filtro desidratante com o compressor
E' necessario cambiare il filtro disidratatore con il compressore
U moet de filterdroger samen met de compressor vervangen
Musisz wymienić filtr osuszacz przy wymianie sprę arki
Рекомендируем замену осушителя вместо с компрессором
Při výměně kompresoru je nutné vyměnit také vysoušeč
Nu untați sa schimbați uscatorul cu compresorul
Kompresörle birlikte nem alıcıyı da değiştirin
Πρέπει να αντικαταστήσετε το φίλτρο υγρού μαζί με το συμπιεστή

		cc				OE NEW	Valeo NEW	OE ES	Valeo ES	
BMW (.../...)										
7 SERIES E38 (.../...)										
725Tds	D	2497	M51D25		04/96 ▸ 08/01	64528377242	**699320** ⊃MQ			7SBU16C
7 SERIES E65/E66										
730i	E	2979	M54B30		09/03 ▸ 02/05	64526917859	**813194**			7SEU17C
730d	D	2993	M57D/30TU/30TU2		09/02 ▸ 10/05	64526917859	**813194**			7SEU17C
8 SERIES E31										
840	E	3982	M60B40	ES	12/92 ▸ 07/96	64528390743		64528385908	**699653**	10PA17C
840	E	4398	M62B44	ES	03/96 ▸ 01/00	64528390743		64528385908	**699653**	10PA17C
M3 E36										
3.0 i	E	2990	S50B/30/30GT	ES	06/92 ▸ 06/00	64528385909	**699051**	64528385915	**699551**	10PA17C
3.2 i	E	3201	S50B32	ES	07/95 ▸ 06/00	64528385909	**699051**	64528385915	**699551**	10PA17C
M3 E46										
3.2 i 24V	E	3246	S54B32		07/00 ▸	64526910458	**813151**			7SBU16C
M5 E39										
5.0 i	E	4941	S62B50		07/99 ▸	64526910460	**699321**			7SB16C
X3 (2003>2006)										
2.0 i 16V	E	1995	N46B20O1	ES	09/05 ▸ 07/06	64526916232		64526916232	•**813833**	7SBU16C
2.5 i 24V	E	2494	M54B25-6S5	ES	03/04 ▸ 07/06	64526916232		64526916232	•**813833**	7SBU16C
3.0 i 24V	E	2979	M54B30	ES	10/03 ▸ 07/06	64526916232		64526916232	•**813833**	7SBU16C
Z3 E36										
1.8 i	E	1796	M43B18	ES	01/96 ▸ 08/98			64528385714	**699546**	SS96D1
1.9 i	E	1895	M43B19-EU3 M44B19	ES	01/96 ▸			64528385714	**699546**	SS96D1
2.8 i	E	2793	M52B28	ES	04/97 ▸ 06/00	64528390741	**699051**	64528385915	**699551**	10PA17C
3.2 i	E	3201	S50B32	ES	06/96 ▸ 04/01	64528385909	**699051**	64528385915	**699551**	10PA17C
Z8 E52										
5.0 i V8	E	4941	S62B50		03/00 ▸	64526910460	**699321**			7SB16C
CADILLAC										
BLS										
2.0 T 16V	E	1998	Z20NET,Z20NETR	ES	03/05 ▸ 09/10	12792669			**813686**	PXV16
2.8 V6 24V	E	2792	Z28NET	ES	03/05 ▸ 10/08	12792669			**813686**	PXV16
CHEVROLET										
LANOS										
1.3 i	E	1349	A13SMS		09/97 ▸	96245943	**813159**			V5
1.5 i	E	1498	A15SMS		09/97 ▸	96245943	**813159**			V5
1.6 i 16V	E	1598	A16DMS		09/97 ▸	96245943	**813159**			V5
MATIZ										
0.8 i	E	796	F8CV		01/05 ▸ 02/11	96406680	•**813373**			SP-10
1.0 i	E	995	B10S		01/05 ▸ 02/11	96406680	•**813373**			SP-10

• **New** Nouveau **Neu** Nuevo **Novo** Nuovo **Nieuw** Nowi **Новый** Novy **Nou** Yeni **Νέους**

⊃MQ : **Valeo Matching Quality** Valeo gleichwertige Qualität **Valeo Calidad Equivalente**
Część Valeo o Jakości Porównywalnej z Oryginałem

Use technical code cross-list for precise selection page 648
Utiliser les pages Cross-List (page 648) pour identifier la bonne référence
Verwenden Sie die Code-Vergleichsliste zur gezielten Suche des adäquaten Bauteils, Seite 648
Utilizar la lista de códigos cruzados para una selección precisa, página 648
Utilizzare la crosslist dei codici tecnici per una scelta precisa, pag. 648
Gebruik de lijst met verwijzingen naar de technische 648 voor de juiste keuze, op pagina 648
U yj listy kodów technicznych Valeo na stronie 648 dla precyzyjnego doboru
A se folosi paginile crosslist ca sa identifiati referita corecta
Χρησιμοποιήστε την λίστα αντιστοιχίων κωδικών για να κάνετε σωστή και ακριβή επιλογή, σελίδα 648

		cc				OE NEW	Valeo NEW	OE ES	Valeo ES	
CHRYSLER										
PT CRUISER										
2.0 i 16V	E	1996	ECC		09/00 ▸	5278724AA	**813228**			10S15C
2.4 i 16V, 2.4 i Turbo 16V	E	2429	EDV-223,EDZ		06/00 ▸	5278724AA	**813228**			10S15C
VOYAGER (83>91)										
2.5, 2.5 24V	E	2501	EDM	ES	10/83 ▸ 02/91	4720743			**699624**	10PA17C
VOYAGER (91>95)										
2.5 i	E	2501	EDM	ES	03/91 ▸ 10/95	4720743			**699624**	10PA17C
2.5 TD	D	2499	MOU		01/93 ▸ 10/95	4723320	**699145**			SD7H15
VOYAGER (96>2001)										
3.3 i V6	E	3301	EGA	ES	01/96 ▸ 03/01	4677144AB		4677144AB	•**813831**	10PA17C
3.8 i V6	E	3778	EGH	ES	10/96 ▸ 03/01	4677144AB		4677144AB	•**813831**	10PA17C
2.5 TD	D	2500	ENC,MOU		01/96 ▸ 03/01	4677344	**699145**			SD7H15
CITROËN										
AX (91>98)										
1.0, 1.0 i	E	954	TU9, TU9M	ES	05/91 ▸ 07/98			6453GN	**699522**	SD7H13
1.1, 1.1 i	E	1124	TU1, TU1M	ES	05/91 ▸ 07/96			6453GN	**699522**	SD7H13
1.4, 1.4 i	E	1360	TU3.2, TU3J2 TU3M/C/S	ES	05/91 ▸ 07/96			6453GN	**699522**	SD7H13
BX										
1.1	E	1124	TU1, XW7B2	ES	09/82 ▸ 06/91			6453FZ	**699518**	SD709
1.4, 1.4 i	E	1360	TU3.2, TU3A, TU3M XY6, XY6C, XY6D XY7CP	ES	09/82 ▸ 12/94			6453FZ	**699518**	SD709
1.6, 1.6 GPL, 1.6 i	E	1580	XU51C, XU52C XU5A/J/S, XU5CP XU5J2, XU5M	ES	09/82 ▸ 12/94			6453FZ	**699518**	SD709
1.9, 1.9 i, 1.9 i 16S	E	1905	XU9/J4/M, XU92C XU9J1/A, XU9J2 XU9S	ES	07/84 ▸ 12/94			6453FZ	**699518**	SD709
1.7 D, 1.7 TD	D	1769	XUD7, XUD7TE	ES	10/84 ▸ 12/94			6453FZ	**699518**	SD709
1.9 D	D	1905	XUD9, XUD9A	ES	07/83 ▸ 12/94			6453FZ	**699518**	SD709
C1										
1.0 i 12V	E	998	384F	ES	06/05 ▸	6453RJ	**699393**		**699893**	DKV06R
1.4 HDi	D	1398	DV4TD		06/05 ▸	6453RK	**699392**			DKV06R
C2										
1.1 i	E	1124	TU1JP	ES	09/03 ▸ 05/04	6453LF	**813189** ⊃MQ	6453LH	**813689**	SD6V12
1.1 i 10045 ▸ 11192	E	1124	TU1A,TU1JP	ES	05/04 ▸ 07/07			6453QH	**813809**	SD6V12
1.1 i 11193 ▸	E	1124	TU1A,TU1JP	ES	07/07 ▸	648722	•**813317**	6453XK	**813817**	SD7V12
1.4 i	E	1360	TU3JP	ES	09/03 ▸ 05/04	6453LF	**813189** ⊃MQ	6453LH	**813689**	SD6V12
1.4 i,1.4 i 16V ▸ 11192	E	1360	ET3J4,TU3A,TU3JP	ES	05/04 ▸ 07/07			6453QH	**813809**	SD6V12
1.4 i,1.4 i 16V 11193 ▸	E	1360	ET3J4,TU3A,TU3JP	ES	07/07 ▸	6453XJ	•**813317**	6453XK	**813817**	SD7V12
1.6 i 16V	E	1587	TU5JP4	ES	09/03 ▸ 05/04	6453LF	**813189** ⊃MQ	6453LH	**813689**	SD6V12
1.6 i 16V 10045 ▸ 11192	E	1587	TU5JP4,TU5JP4S	ES	09/03 ▸ 07/07			6453QH	**813809**	SD6V12

You must replace the receiver drier with the compressor
Vous devez remplacer la bouteille déshydratante avec le compresseur
Tauschen Sie den Trockner mit dem Kompressor
Es obligatorio cambiar el Filtro Deshidratante con el Compresor
Tem de substituir o filtro desidratante com o compressor
E' necessario cambiare il filtro disidratatore con il compressore
U moet de filterdroger samen met de compressor vervangen
Musisz wymienić filtr osuszacz przy wymianie sprę arki
Рекомендируем замену осушителя вместо с компрессором
Při výměně kompresoru je nutné vyměnit také vysoušeč
Nu uitați sa schimbați uscatorul cu compresorul
Kompresörle birlikte nem alıcıyı da değiştirin
Πρέπει να αντικαταστήσετε το φίλτρο υγρού μαζί με το συμπιεστή

		cc				OE NEW	Valeo NEW	OE ES	Valeo ES	
CITROËN (.../...)										
C2 (.../...)										
1.6 i 16V ▸11193	E	1587	TU5JP4,TU5JP4S	ES	07/07 ▸ 01/10	6453XJ	•**813317**	6453XK	**813817**	SD7V12
1.4 HDi	D	1398	DV4TD	ES	09/03 ▸ 05/04	6453LF	**813189** ⊃MQ	6453LH	**813689**	SD6V12
1.4 HDi ▸11192	D	1398	DV4TD	ES	05/04 ▸ 07/07			6453QH	**813809**	SD6V12
1.4 HDi ▸11193	D	1398	DV4TD	ES	07/07 ▸ 01/10	6453XJ	•**813317**	6453XK	**813817**	SD7V12
1.6 HDi 16V ▸11192	D	1560	DV6TED4	ES	11/05 ▸ 07/07			6453QH	**813809**	SD6V12
1.6 HDi 16V ▸11192	D	1560	DV6TED4	ES	11/05 ▸ 01/10	6453XJ	•**813317**	6453XK	**813817**	SD7V12
C3 (2002>2005)										
1.1 i	E	1124	TU1JP	ES	04/02 ▸ 07/04	6453LF	**813189** ⊃MQ	6453LH	**813689**	SD6V12
1.1 i ▸10109	E	1124	TU1JP	ES	07/04 ▸ 10/05			6453QH	**813809**	SD6V12
1.1 i ▸10109	E	1124	TU1JP	ES	07/04 ▸ 10/05	6453QG	•**813317**	6453XK	**813817**	SD7V12
1.4 i, 1.4 i 16V	E	1360	ET3J4, TU3JP	ES	04/02 ▸ 07/04	6453LF	**813189** ⊃MQ	6453LH	**813689**	SD6V12
1.4 i,1.4 i 16V ▸10109	E	1360	ET3J4,TU3JP	ES	07/04 ▸ 10/05			6453QH	**813809**	SD6V12
1.4 i,1.4 i 16V ▸10109	E	1360	ET3J4,TU3JP	ES	07/04 ▸ 10/05	6453QG	•**813317**	6453XK	**813817**	SD7V12
1.6 i 16V	E	1587	TU5JP4	ES	04/02 ▸ 07/04	6453LF	**813189** ⊃MQ	6453LH	**813689**	SD6V12
1.6 i 16V ▸10109	E	1587	TU5JP4	ES	07/04 ▸ 10/05			6453QH	**813809**	SD6V12
1.6 i 16V ▸10109	E	1587	TU5JP4	ES	07/04 ▸ 10/05	6453QG	•**813317**	6453XK	**813817**	SD7V12
1.4 HDi 16V, 1.4 Hdi	D	1398	DV4TED4, DV4TD	ES	04/02 ▸ 07/04	6453LF	**813189** ⊃MQ	6453LH	**813689**	SD6V12
1.4 HDi,1.4 HDi 16V ▸10109	D	1398	DV4TD,DV4TED4	ES	07/04 ▸ 10/05			6453QH	**813809**	SD6V12
1.4 HDi,1.4 HDi 16V ▸10109	D	1398	DV4TD,DV4TED4	ES	07/04 ▸ 10/05	6453QG	•**813317**	6453XK	**813817**	SD7V12
1.6 HDi 16V	D	1560	DV6ATED4	ES	06/05 ▸ 10/05			6453QH	**813809**	SD6V12
1.6 HDi 16V	D	1560	DV6ATED4	ES	06/05 ▸ 10/05	6453QG	•**813317**	6453XK	**813817**	SD7V12
C3 (2005>)										
1.1 i GPL	F	1124	TU1A	ES	11/09 ▸ 01/11	648722	•**813317**	6453XK	**813817**	SD7V12
1.1 i ▸11192	E	1124	TU1A	ES	11/05 ▸ 01/11	6453QG	•**813317**	6453XK	**813817**	SD7V12
1.4 i,1.4 i 16V ▸11192	E	1360	ET3J4,TU3A,TU3JP	ES	11/05 ▸ 10/09	6453QG	•**813317**	6453XK	**813817**	SD7V12
1.4 i GNV ▸11192	F	1360	TU3JP	ES	11/05 ▸ 10/09	6453QG	•**813317**	6453XK	**813817**	SD7V12
1.6 i 16V ▸11193	E	1587	TU5JP4	ES	11/05 ▸ 10/09	6453XJ	•**813317**	6453XK	**813817**	SD7V12
1.4 HDi ▸11192	D	1398	DV4TD	ES	11/05 ▸ 01/11	6453QG	•**813317**	6453XK	**813817**	SD7V12
1.6 HDi 16V ▸11193	D	1560	DV6ATED4,DV6TED4	ES	11/05 ▸ 10/09	6453XJ	•**813317**	6453XK	**813817**	SD7V12

• **New** Nouveau **Neu** Nuevo **Novo** Nuovo **Nieuw** Nowi **Новый** Nowy **Nou** Yeni **Νέους**

⊃MQ : **Valeo Matching Quality** Valeo gleichwertige Qualität **Valeo Calidad Equivalente**
Część Valeo o Jakości Porównywalnej z Oryginałem

Use technical code cross-list for precise selection page 648
Utiliser les pages Cross-List (page 648) pour identifier la bonne référence
Verwenden Sie die Code-Vergleichsliste zur gezielten Suche des adäquaten Bauteils, Seite 648
Utilizar la lista de códigos cruzados para una selección precisa, página 648
Utilizzare la crosslist dei codici tecnici per una scelta precisa, pag. 648
Gebruik de lijst met verwijzingen naar de technische 648 voor de juiste keuze, op pagina 648
U yj listy kodów technicznych Valeo na stronie 648 dla precyzyjnego doboru
A se folosi paginile crosslist ca sa identifiati referita corecta
Χρησιμοποιήστε την λίστα αντιστοιχίων κωδικών για να κάνετε σωστή και ακριβή επιλογή, σελίδα 648

		cc				OE NEW	Valeo NEW	OE ES	Valeo ES	
CITROËN (.../...)										
C3 (2009>)										
1.1 i	E	1124	TU1AE5	ES	03/10 ▸	648708	•**813223**	6453WL	**813723**	SD6C12
1.4 i	E	1360	TU3AE5	ES	10/09 ▸	648708	•**813223**	6453WL	**813723**	SD6C12
1.4 i GPL	F	1360	TU3AE5	ES	10/10 ▸	648708	•**813223**	6453WL	**813723**	SD6C12
1.4 VTi 95 16V	E	1397	EP3C	ES	10/09 ▸	6453ZZ	•**813223**	6453WL	**813723**	SD6C12
1.6 VTi 120 16V	E	1598	EP6C	ES	10/09 ▸	648708	•**813223**	6453WL	**813723**	SD6C12
1.4 HDi 68,1.4 HDi 70	D	1398	DV4C,DV4TD	ES	10/09 ▸	648708	•**813223**	6453WL	**813723**	SD6C12
1.6 HDi 110,1.6 HDi 90 16V **1.6 HDi 92**	D	1560	DV6ATED4,DV6C DV6DTED	ES	10/09 ▸	6453ZZ	•**813223**	6453WL	**813723**	SD6C12
C3 (2005>)										
1.1 i GPL	F	1124	TU1A	ES	11/09 ▸			6453XK	**813817**	SD7V12
1.1 i ▸11192	E	1124	TU1A	ES	11/05 ▸ 07/07			6453QH	**813809**	SD6V12
1.1 i 11193 ▸	E	1124	TU1A	ES	07/07 ▸			6453XK	**813817**	SD7V12
1.4 i,1.4 i 16V ▸11192	E	1360	ET3J4,TU3A,TU3JP	ES	11/05 ▸ 07/07			6453QH	**813809**	SD6V12
1.4 i,1.4 i 16V 11193 ▸	E	1360	ET3J4,TU3A,TU3JP	ES	11/05 ▸ 10/09			6453XK	**813817**	SD7V12
1.6 i 16V ▸11192	E	1587	TU5JP4	ES	11/05 ▸ 07/07			6453QH	**813809**	SD6V12
1.6 i 16V 11193 ▸	E	1587	TU5JP4	ES	11/05 ▸ 10/09			6453XK	**813817**	SD7V12
1.4 HDi 11193 ▸	D	1398	DV4TD	ES	07/07 ▸			6453XK	**813817**	SD7V12
1.4 HDi ▸11192	D	1398	DV4TD	ES	11/05 ▸ 07/07			6453QH	**813809**	SD6V12
1.6 HDi 16V 11193 ▸	D	1560	DV6ATED4,DV6TED4	ES	07/07 ▸ 10/09			6453XK	**813817**	SD7V12
1.6 HDi 16V ▸11192	D	1560	DV6ATED4,DV6TED4	ES	11/05 ▸ 07/07			6453QH	**813809**	SD6V12
C3 PLURIEL										
1.4 i	E	1360	TU3JP	ES	05/03 ▸ 05/04	6453LF	**813189** ↻MQ	6453LH	**813689**	SD6V12
1.4 i	E	1360	TU3A,TU3JP	ES	05/03 ▸			6453QH	**813809**	SD6V12
1.4 i	E	1360	TU3A,TU3JP	ES	05/03 ▸	6453QG	•**813317**	6453XK	**813817**	SD7V12
1.6 i 16V	E	1587	TU5JP4	ES	05/03 ▸ 05/04	6453LF	**813189** ↻MQ	6453LH	**813689**	SD6V12
1.6 i 16V	E	1587	TU5JP4	ES	05/03 ▸			6453QH	**813809**	SD6V12
1.6 i 16V 10044 ▸	E	1587	TU5JP4	ES	05/03 ▸	648722	•**813317**	6453XK	**813817**	SD7V12
1.4 HDi	D	1398	DV4TD	ES	02/04 ▸ 12/05			6453QH	**813809**	SD6V12
1.4 HDi	D	1398	DV4TD	ES	02/04 ▸ 01/11	648722	•**813317**	6453XK	**813817**	SD7V12
1.4 HDi	D	1399	DV4TD	ES	02/04 ▸ 05/04	6453LF	**813189** ↻MQ	6453LH	**813689**	SD6V12
C3 PICASSO										
1.4 i	E	1397	EP3		02/09 ▸	6453WK	**813162**			SD7C16
1.4 VTi 16V	E	1397	EP3,EP3C	ES	02/09 ▸	648708	•**813223**	6453WL	**813723**	SD6C12
1.6	E	1598	EP6		02/09 ▸	6453WK	**813162**			SD7C16
1.6 Vti 16V	E	1598	EP6	ES	02/09 ▸	648708	•**813223**	6453WL	**813723**	SD6C12
1.6 HDi	D	1560	DV6ATED4		02/09 ▸	6453WK	**813162**			SD7C16
C3 PICASSO										
1.6 HDi 16V	D	1560	DV6ATED4,DV6TED4	ES	02/09 ▸	648708	•**813223**	6453WL	**813723**	SD6C12

You must replace the receiver drier with the compressor
Vous devez remplacer la bouteille déshydratante avec le compresseur
Tauschen Sie den Trockner mit dem Kompressor
Es obligatorio cambiar el Filtro Deshidratante con el Compresor
Tem de substituir o filtro desidratante com o compressor
E' necessario cambiare il filtro disidratatore con il compressore
U moet de filterdroger samen met de compressor vervangen
Musisz wymienić filtr osuszacz przy wymianie sprę arki
Рекомендируем замену осушителя вместо с компрессором
Při výměně kompresoru je nutné vyměnit také vysoušeč
Nu untați sa schimbați uscatorul cu compresorul
Kompresörle birlikte nem alıcıyı da değiştirin
Πρέπει να αντικαταστήσετε το φίλτρο υγρού μαζί με το συμπιεστή

		cc				OE NEW	Valeo NEW	OE ES	Valeo ES	
CITROËN (.../...)										
C4										
1.4 i 16V ▸11318	E	1360	ET3J4	ES	11/04 ▸	6453WK	**813162**	6453QN	**813662**	SD7C16
1.4 i 16V ▸11318	E	1360	ET3J4	ES	11/04 ▸	6453ZZ	•**813223**	6453WL	**813723**	SD6C12
1.6 i 16V ▸11318	E	1587	TU5JP4	ES	11/04 ▸	6453WK	**813162**	6453QN	**813662**	SD7C16
1.6 i 16V ▸11318	E	1587	TU5JP4	ES	11/04 ▸	6453QJ	•**813223**	6453WL	**813723**	SD6C12
1.6 i Bioflex 16V ▸11318	F	1587	TU5JP4	ES	09/07 ▸ 11/07	648708	•**813223**	6453WL	**813723**	SD6C12
2.0 i 16V	E	1997	EW10A,EW10J4 EW10J4S	ES	11/04 ▸	6453QL	**813162**	6453QN	**813662**	SD7C16
2.0 i 16V ▸11312	E	1997	EW10A,EW10J4 EW10J4S	ES	11/04 ▸	648708	•**813223**	6453WL	**813723**	SD6C12
1.6 HDi 16V	D	1560	DV6ATED4, DV6TED4	ES	11/04 ▸	6453QL	**813162**	6453QN	**813662**	SD7C16
1.6 HDi 16V ▸11318	D	1560	DV6ATED4,DV6TED4 DV6TED4B	ES	11/04 ▸	6453ZZ	•**813223**	6453WL	**813723**	SD6C12
2.0 HDi 16V 11319 ▸11801	D	1997	DW10BTED4	ES	11/04 ▸ 03/09			6453XN	**813719**	SD7C16
2.0 HDi 16V	D	1997	DW10BTED4	ES	11/04 ▸	6453QP	**813164**	6453QQ	**813664**	SD6C12
C4 PICASSO (2006>)										
1.6 HDi 16V	D	1560	DV6TED4		09/06 ▸	6453QL	**813162**			SD7C16
1.8 i 16V	E	1749	EW7A		09/06 ▸	6453QL	**813162**			SD7C16
1.8 i 16V	E	1749	EW7A	ES	11/07 ▸ 03/09			6453YF	**813717**	SD7C16
2.0 i 16V	E	1997	EW10A		09/06 ▸	6453QL	**813162**			SD7C16
2.0 i 16V	E	1997	EW10A	ES	11/07 ▸ 03/09			6453YF	**813717**	SD7C16
2.0 HDi 16V	D	1997	DW10BTED4		09/06 ▸	6453RV	**813161**			SD7C16
2.0 HDi 16V ▸11318	D	1997	DW10BTED4	ES	11/07 ▸ 03/09			6453TN	**813716**	SD7C16
C5 (2001>2004)										
1.8 i 16V ▸9337	E	1749	EW7J4	ES	02/01 ▸ 06/02	6453CL	**699199**		**699699**	SD7V16
1.8 i 16V 9338 ▸	E	1749	EW7J4	ES	06/02 ▸ 08/04			6453YK	**813820**	SD7V16
2.0 i 16V, 2.0 HPi 16V ▸9337	E	1997	EW10D, EW10J4	ES	02/01 ▸ 06/02	6453CL	**699199**		**699699**	SD7V16
3.0 i V6 24V ▸9337	E	2946	ES9J4S	ES	02/01 ▸ 06/02	6453AX		6453GP	**699606**	SD7V16
3.0 i V6 24V 9338 ▸	E	2946	ES9J4S	ES	02/01 ▸ 08/04			6453NJ	**813804**	SD7V16
2.0 HDi	D	1997	DW10ATED, DW10TD	ES	02/01 ▸ 12/01	6453AQ	**699155**	6453GF	**699655**	V5
2.0 HDi 9338 ▸	D	1997	DW10ATED, DW10TD	ES	06/02 ▸ 08/04	6453TE	**699272** ⊃MQ	6453LR	**699772**	SD7V16
2.0 HDi ▸9337	D	1997	DW10ATED,DW10TD	ES	12/01 ▸ 08/04			6453LY	**813815**	V51135
2.2 HDi 16V ▸9337	D	2179	DW12TED4	ES	02/01 ▸ 06/02	6453FE	**699236** ⊃MQ	6453GA	**699736**	SD7V16
2.2 HDi 16V 9338 ▸	D	2179	DW12TED4	ES	06/02 ▸ 08/04	6453TE	**699272** ⊃MQ	6453LR	**699772**	SD7V16
C5 (2004>2007)										
2.2 HDi 16V 10248 ▸	D	2179	DW12TED4	ES	11/04 ▸ 12/05			6453RS	**813713**	SD7C16

• **New** Nouveau **Neu** Nuevo **Novo** Nuovo **Nieuw** Nowi **Новый** Nowy **Nou** Yeni **Νέους**

⊃MQ : **Valeo Matching Quality** Valeo gleichwertige Qualität **Valeo Calidad Equivalente** Część Valeo o Jakości Porównywalnej z Oryginałem

Use technical code cross-list for precise selection page 648
Utiliser les pages Cross-List (page 648) pour identifier la bonne référence
Verwenden Sie die Code-Vergleichsliste zur gezielten Suche des adäquaten Bauteils, Seite 648
Utilizar la lista de códigos cruzados para una selección precisa, página 648
Utilizzare la crosslist dei codici tecnici per una scelta precisa, pag. 648
Gebruik de lijst met verwijzingen naar de technische 648 voor de juiste keuze, op pagina 648
U yj listy kodów technicznych Valeo na stronie 648 dla precyzyjnego doboru
A se folosi paginile crosslist ca sa identifiati referita corecta
Χρησιμοποιήστε την λίστα αντιστοιχίων κωδικών για να κάνετε σωστή και ακριβή επιλογή, σελίδα 648

		CC				OE NEW	Valeo NEW	OE ES	Valeo ES	
CITROËN (.../...)										
C5 (2004>2008)										
1.8 i 16V ▸10186	E	1749	EW7J4		09/04 ▸ 06/08	6453RA	**699351**			SD7C16
2.0 i 16V	E	1997	EW10A		09/04 ▸ 06/08	6453RA	**699351**			SD7C16
1.6 HDi 16V	D	1560	DV6TED4		09/04 ▸ 06/08	6453RG	**699349**			SD7C16
2.0 HDi 16V ▸10703	D	1997	DW10BTED4		02/06 ▸ 06/08	6453WW	**813163**			SD7C16
2.0 HDi 16V 10248 ▸10702	D	1997	DW10BTED4	ES	09/04 ▸ 06/08	6453RF	**813225**	6453XE	**813725**	SD7C16
2.2 HDi 16V	D	2179	DW12BTED4		02/06 ▸ 06/08	6453WW	**813163**			SD7C16
C5 (2008>)										
1.6 THP 16V	E	1598	EP6CDT	ES	10/09 ▸	648708	•**813223**	6453WL	**813723**	SD6C12
1.8 i 16V	E	1749	EW7A	ES	03/08 ▸			6453XC	**813726**	SD7C16
2.0 i 16V	E	1997	EW10A	ES	03/08 ▸			6453XC	**813726**	SD7C16
1.6 HDi	D	1560	DV6TED4	ES	03/08 ▸			6453XC	**813726**	SD7C16
1.6 HDi	D	1560	DV6C	ES	10/10 ▸	648708	•**813223**	6453WL	**813723**	SD6C12
2.0 HDi,2.0 HDi-160 16V	D	1997	DW10BTED4 DW10CTED4	ES	03/08 ▸			6453XF	**813725**	SD7C16
C8										
2.0 i 16V ▸10201	E	1997	EW10J4	ES	06/02 ▸ 10/04	6453CL	**699199**		**699699**	SD7V16
2.0 i 16V	E	1997	EW10A	ES	02/06 ▸	6453TE	**699272** ⊃MQ	6453LR	**699772**	SD7V16
2.0 i 16V ▸10202	E	1997	EW10J4	ES	10/04 ▸ 10/05			6453YK	**813820**	SD7V16
2.2 i 16V ▸10201	E	2230	EW12J4	ES	06/02 ▸ 10/04	6453CL	**699199**		**699699**	SD7V16
2.2 i 16V ▸10202	E	2230	EW12J4	ES	10/04 ▸ 09/05			6453YK	**813820**	SD7V16
3.0 i V6 24V	E	2946	ES9J4S	ES	06/02 ▸	6453AX		6453GP	**699606**	SD7V16
3.0 i V6 24V ▸10066	E	2946	ES9J4S	ES	06/04 ▸ 09/05			6453NJ	**813804**	SD7V16
2.0 HDi 16V	D	1997	DW10ATED4	ES	04/04 ▸	6453TE	**699272** ⊃MQ	6453LR	**699772**	SD7V16
2.0 HDi 16V ▸11571	D	1997	DW10BTED4 DW10UTED4	ES	04/06 ▸			6453TC	**813811**	SD7V16
2.0 HDi 16V ▸11571	D	1997	DW10BTED4 DW10UTED4		04/06 ▸	6453YW	•**813322**	6453YX		SD7V16
2.2 HDi 16V	D	2179	DW12ATED4	ES	04/04 ▸ 06/06	6453TE	**699272** ⊃MQ	6453LR	**699772**	SD7V16
2.2 HDi 16V ▸11571	D	2179	DW12BTED4	ES	12/07 ▸			6453TC	**813811**	SD7V16
2.2 HDi 16V ▸11571	D	2179	DW12BTED4		12/07 ▸	6453YW	•**813322**	6453YX		SD7V16
DS3										
1.4 VTi 95 16V	E	1397	EP3C	ES	03/10 ▸	6453ZZ	•**813223**	6453WL	**813723**	SD6C12
1.6 THP 16V	E	1598	EP6C,EP6DT	ES	03/10 ▸	648708	•**813223**	6453WL	**813723**	SD6C12
1.6 HDI	D	1560	DV6C,DV6DTED	ES	03/10 ▸	6453ZZ	•**813223**	6453WL	**813723**	SD6C12
EVASION (94>98)										
1.8 i	E	1761	XU7JP	ES	07/96 ▸ 09/98	6453FE	**699236** ⊃MQ	6453GA	**699736**	SD7V16
2.0 i, 2.0 i Turbo CT	E	1998	XU10J2C XU10J2CTEL3	ES	07/94 ▸ 09/98	6453FE	**699236** ⊃MQ	6453GA	**699736**	SD7V16
1.9 TD	D	1905	XUD9BTF, XUD9TEF XUD9TF	ES	10/94 ▸ 09/98	6453FE	**699236** ⊃MQ	6453GA	**699736**	SD7V16

You must replace the receiver drier with the compressor
Vous devez remplacer la bouteille déshydratante avec le compresseur
Tauschen Sie den Trockner mit dem Kompressor
Es obligatorio cambiar el Filtro Deshidratante con el Compresor
Tem de substituir o filtro desidratante com o compressor
E' necessario cambiare il filtro disidratatore con il compressore
U moet de filterdroger samen met de compressor vervangen
Musisz wymienić filtr osuszacz przy wymianie sprę arki
Рекомендируем замену осушителя вместо с компрессором
Při výměně kompresoru je nutné vyměnit také vysoušeč
Nu untați sa schimbați uscatorul cu compresorul
Kompresörle birlikte nem alıcıyı da değiştirin
Πρέπει να αντικαταστήσετε το φίλτρο υγρού μαζί με το συμπιεστή

		cc				OE NEW	Valeo NEW	OE ES	Valeo ES	
CITROËN (.../...)										
EVASION (94>98) (.../...)										
2.1 TD	D	2088	XUD11BTE	ES	04/96 ▸ 09/98	6453FE	**699236** ⊃MQ	6453GA	**699736**	SD7V16
EVASION (98>2002)										
1.8 i	E	1761	XU7JP	ES	10/98 ▸ 05/02	6453FE	**699236** ⊃MQ	6453GA	**699736**	SD7V16
2.0 i 16V	E	1997	EW10J4	ES	07/00 ▸ 05/02	6453CL	**699199**		**699699**	SD7V16
2.0 i, 2.0 i 16V **2.0 i Turbo CT**	E	1998	XU10J2C/TEL3 XU10J4R	ES	10/98 ▸ 05/02	6453FE	**699236** ⊃MQ	6453GA	**699736**	SD7V16
1.9 TD	D	1905	XUD9BTF	ES	10/98 ▸ 05/02	6453FE	**699236** ⊃MQ	6453GA	**699736**	SD7V16
2.0 HDi, 2.0 HDi 16V	D	1997	DW10ATED DW10ATED4	ES	08/99 ▸ 05/02	6453FE	**699236** ⊃MQ	6453GA	**699736**	SD7V16
2.1 TD	D	2088	XUD11BTE	ES	10/98 ▸ 05/02	6453FE	**699236** ⊃MQ	6453GA	**699736**	SD7V16
SAXO (96>99)										
1.1 i, 1.1 i GPL	E	1124	TU1M+	ES	03/96 ▸ 08/99	6453N1		6453GC	**699526**	SD7V12
1.4 i	E	1360	TU3JP	ES	03/96 ▸ 08/99	6453N1		6453GC	**699526**	SD7V12
1.6 i, 1.6 i 16V	E	1587	TU5J4, TU5JP	ES	03/96 ▸ 08/99	6453N1		6453GC	**699526**	SD7V12
1.5 D	D	1527	TUD5, TUD5B	ES	05/96 ▸ 08/99	6453N1		6453GC	**699526**	SD7V12
SAXO (99>)										
Electrique	L		SA13	ES	09/99 ▸ 09/00	6453N1		6453GC	**699526**	SD7V12
Electrique	L		SA13	ES	09/00 ▸	6453FS	**699237** ⊃MQ	6453JK	**699737**	SD6V12
1.0 i	E	954	TU9M	ES	09/99 ▸ 09/00	6453N1		6453GC	**699526**	SD7V12
1.0 i	E	954	TU9M	ES	09/00 ▸	6453FS	**699237** ⊃MQ	6453JK	**699737**	SD6V12
1.1 i, 1.1 i GPL	E	1124	TU1JP, TU1M+	ES	09/99 ▸ 09/00	6453N1		6453GC	**699526**	SD7V12
1.1 i, 1.1 i GPL	E	1124	TU1JP, TU1M+	ES	09/00 ▸	6453FS	**699237** ⊃MQ	6453JK	**699737**	SD6V12
1.4 i	E	1360	TU3JP	ES	09/99 ▸ 09/00	6453N1		6453GC	**699526**	SD7V12
1.4 i	E	1360	TU3JP	ES	09/00 ▸	6453FS	**699237** ⊃MQ	6453JK	**699737**	SD6V12
1.6 i, 1.6 i 16V	E	1587	TU5J4, TU5JP	ES	09/99 ▸ 09/00	6453N1		6453GC	**699526**	SD7V12
1.6 i, 1.6 i 16V	E	1587	TU5J4, TU5JP	ES	09/00 ▸	6453FS	**699237** ⊃MQ	6453JK	**699737**	SD6V12
1.5 D	D	1527	TUD5, TUD5B	ES	09/99 ▸ 09/00	6453N1		6453GC	**699526**	SD7V12
1.5 D	D	1527	TUD5, TUD5B	ES	09/00 ▸	6453FS	**699237** ⊃MQ	6453JK	**699737**	SD6V12
SYNERGIE (95>2002)										
2.0 i	E	1998	XU10J2C	ES	10/95 ▸ 05/02	6453FE	**699236** ⊃MQ	6453GA	**699736**	SD7V16
1.9 TD	D	1905	XUD9TEF	ES	10/95 ▸ 05/02	6453FE	**699236** ⊃MQ	6453GA	**699736**	SD7V16
XANTIA (93>97)										
1.6 i	E	1580	XU5JP	ES	08/93 ▸ 12/97	6453FE	**699236** ⊃MQ	6453GA	**699736**	SD7V16
1.8 i, 1.8 i 16V	E	1761	XU7JB, XU7JP XU7JP4	ES	03/93 ▸ 12/97	6453FE	**699236** ⊃MQ	6453GA	**699736**	SD7V16
2.0 i, 2.0 i 16V	E	1998	XU10J2C, XU10J4 XU10J4R	ES	03/93 ▸ 12/97	6453FE	**699236** ⊃MQ	6453GA	**699736**	SD7V16
2.0 i Turbo CT	E	1998	XU10J2CTE XU10J2CTEL3	ES	07/95 ▸ 12/97	6453P9		6453GE	**699520**	SD7H15

• **New** Nouveau **Neu** Nuevo **Novo** Nuovo **Nieuw** Nowi **Новый** Novy **Nou** Yeni **Νέους**

⊃MQ : **Valeo Matching Quality** Valeo gleichwertige Qualität **Valeo Calidad Equivalente**
Część Valeo o Jakości Porównywalnej z Oryginałem

Use technical code cross-list for precise selection page 648
Utiliser les pages Cross-List (page 648) pour identifier la bonne référence
Verwenden Sie die Code-Vergleichsliste zur gezielten Suche des adäquaten Bauteils, Seite 648
Utilizar la lista de códigos cruzados para una selección precisa, página 648
Utilizzare la crosslist dei codici tecnici per una scelta precisa, pag. 648
Gebruik de lijst met verwijzingen naar de technische 648 voor de juiste keuze, op pagina 648
U yj listy kodów technicznych Valeo na stronie 648 dla precyzyjnego doboru
A se folosi paginile crosslist ca sa identifiati referita corecta
Χρησιμοποιήστε την λίστα αντιστοιχίων κωδικών για να κάνετε σωστή και ακριβή επιλογή, σελίδα 648

		cc				OE NEW	Valeo NEW	OE ES	Valeo ES	
CITROËN (.../...)										
XANTIA (93>97) (.../...)										
1.9 D, 1.9 SD, 1.9 TD	D	1905	XUD9	ES	06/93 ▸ 12/97	6453AQ	**699155**	6453GF	**699655**	V5
1.9 D, 1.9 SD, 1.9 TD	D	1905	XUD9	ES	06/93 ▸ 12/97	6453FE	**699236** ⊃MQ	6453GA	**699736**	SD7V16
XANTIA (97>2002)										
1.6 i	E	1580	XU5JP	ES	12/97 ▸ 05/02	6453FE	**699236** ⊃MQ	6453GA	**699736**	SD7V16
1.8 i, 1.8 i 16V **1.8 i GPL 16V**	E	1761	XU7JB, XU7JP XU7JP4	ES	12/97 ▸ 05/02	6453FE	**699236** ⊃MQ	6453GA	**699736**	SD7V16
2.0 i, 2.0 i 16V **2.0 i Turbo CT**	E	1998	XU10J2C XU10J2CTEL3 XU10J4R	ES	12/97 ▸ 05/02	6453FE	**699236** ⊃MQ	6453GA	**699736**	SD7V16
3.0 i V6 24V	E	2946	ES9J4	ES	12/97 ▸ 05/02	6453AX		6453GP	**699606**	SD7V16
1.9 SD, 1.9 TD	D	1905	XUD9BTF, XUD9SD	ES	12/97 ▸ 05/02	6453AQ	**699155**	6453GF	**699655**	V5
2.0 HDi	D	1997	DW10ATED, DW10TD	ES	10/98 ▸ 05/02	6453AQ	**699155**	6453GF	**699655**	V5
2.1 TD	D	2088	XUD11BTE	ES	12/97 ▸ 05/02	6453AQ	**699155**	6453GF	**699655**	V5
XM (89>94)										
2.0, 2.0 i, 2.0 i Turbo CT	E	1998	XU10	ES	05/89 ▸ 09/93			6453FZ	**699518**	SD709
3.0 i V6, 3.0 i V6 24V	E	2975	ZPJ, ZPJ4	ES	05/89 ▸ 09/93			6453FZ	**699518**	SD709
2.1 TD Turbo D12 12V	D	2088	XUD11ATE	ES	09/89 ▸ 09/93			6453FZ	**699518**	SD709
2.1 TD Turbo D12 12V	D	2088	XUD11ATE	ES	09/93 ▸ 06/94	6453P9		6453GE	**699520**	SD7H15
2.1 D D12	D	2138	XUD11A	ES	09/89 ▸ 09/93			6453FZ	**699518**	SD709
2.1 D D12	D	2138	XUD11A	ES	09/93 ▸ 06/94	6453P9		6453GE	**699520**	SD7H15
XM (94>2001)										
2.0 i 16V, 2.0 i Turbo CT	E	1998	XU10J2TE, XU10J4R	ES	07/94 ▸ 03/00	6453P9		6453GE	**699520**	SD7H15
2.0 i 16V, 2.0 i Turbo CT	E	1998	XU10J2TE, XU10J4R	ES	07/94 ▸ 07/01	6453GK			**699523**	SD7H15
3.0 i V6, 3.0 i V6 24V	E	2963	ZPJ, ZPJ4	ES	07/94 ▸ 06/97	6453Q2		6453GJ	**699525**	SD7V16
2.1 TD Turbo D12 12V	D	2088	XUD11ATE	ES	07/94 ▸ 06/97	6453P9		6453GE	**699520**	SD7H15
2.1 TD Turbo D12 12V	D	2088	XUD11ATE	ES	07/94 ▸ 06/97	6453GK			**699523**	SD7H15
2.1 D D12	D	2138	XUD11A	ES	07/94 ▸ 06/96	6453P9		6453GE	**699520**	SD7H15
2.1 D D12	D	2138	XUD11A	ES	07/94 ▸ 06/96	6453GK			**699523**	SD7H15
2.5 TD Turbo D	D	2446	DK5ATE	ES	07/94 ▸ 07/01	6453FE	**699236** ⊃MQ	6453GA	**699736**	SD7V16
XSARA (97>2000)										
1.4 i, 1.4 i GPL	E	1360	TU3JP	ES	07/97 ▸ 08/00	6453N1		6453GC	**699526**	SD7V12
1.6 i	E	1587	TU5JP	ES	07/97 ▸ 08/00	6453N1		6453GC	**699526**	SD7V12
1.8 i, 1.8 i 16V **1.8 i GPL 16V**	E	1761	XU7JB, XU7JP XU7JP4	ES	07/97 ▸ 08/00	6453FE	**699236** ⊃MQ	6453GA	**699736**	SD7V16
2.0 i 16V	E	1998	XU10J4R, XU10J4RS	ES	01/98 ▸ 08/00	6453FE	**699236** ⊃MQ	6453GA	**699736**	SD7V16
1.5 D	D	1527	TUD5	ES	03/98 ▸ 08/00	6453N1		6453GC	**699526**	SD7V12
1.8 D	D	1769	XUD7	ES	03/98 ▸ 08/00	6453FE	**699236** ⊃MQ	6453GA	**699736**	SD7V16
1.9 D	D	1868	DW8	ES	09/98 ▸ 08/00	6453FE	**699236** ⊃MQ	6453GA	**699736**	SD7V16
1.9 D, 1.9 SD, 1.9 TD	D	1905	XUD9A, XUD9BSD XUD9SD, XUD9TE	ES	07/97 ▸ 08/00	6453FE	**699236** ⊃MQ	6453GA	**699736**	SD7V16
2.0 HDi	D	1997	DW10TD	ES	03/99 ▸ 08/00	6453FE	**699236** ⊃MQ	6453GA	**699736**	SD7V16
XSARA (2000>)										
1.4 i	E	1360	TU3JP	ES	12/01 ▸	6453LF	**813189** ⊃MQ	6453LH	**813689**	SD6V12
1.4 i 10046 ▸	E	1360	TU3JP	ES	05/04 ▸ 07/05			6453QF	**813824**	SD7V12

You must replace the receiver drier with the compressor
Vous devez remplacer la bouteille déshydratante avec le compresseur
Tauschen Sie den Trockner mit dem Kompressor
Es obligatorio cambiar el Filtro Deshidratante con el Compresor
Tem de substituir o filtro desidratante com o compressor
E' necessario cambiare il filtro disidratatore con il compressore
U moet de filterdroger samen met de compressor vervangen
Musisz wymienić filtr osuszacz przy wymianie sprę arki
Рекомендируем замену осушителя вместо с компрессором
Při výměně kompresoru je nutné vyměnit také vysoušeč
Nu untați sa schimbați uscatorul cu compresorul
Kompresörle birlikte nem alıcıyı da değiştirin
Πρέπει να αντικαταστήσετε το φίλτρο υγρού μαζί με το συμπιεστή

		cc				OE NEW	Valeo NEW	OE ES	Valeo ES	
CITROËN (.../...)										
XSARA (2000>) (.../...)										
1.4 i	E	1360	TU3JP	ES	09/00 ▸ 12/01			6453JJ	**813814**	SD7V12
1.4 i	E	1360	TU3JP	ES	09/00 ▸ 12/01			6453JP	**699738**	SD6V12
1.4 i 10046 ▸	E	1360	TU3JP	ES	05/04 ▸ 07/05	648714	•**813317**	6453XK	**813817**	SD7V12
1.6 i 16V	E	1587	TU5JP4	ES	12/01 ▸	6453LF	**813189** ⊃MQ	6453LH	**813689**	SD6V12
1.6 i 16V	E	1587	TU5JP4	ES	09/00 ▸ 12/01			6453JP	**699738**	SD6V12
1.6 i 16V	E	1587	TU5JP4	ES	09/00 ▸ 12/01			6453JJ	**813814**	SD7V12
1.6 i 16V 10046 ▸	E	1587	TU5JP4	ES	05/04 ▸ 08/05			6453QF	**813824**	SD7V12
1.6 i 16V 10046 ▸	E	1587	TU5JP4	ES	05/04 ▸ 08/05	648714	•**813317**	6453XK	**813817**	SD7V12
2.0 i 16V	E	1997	EW10J4	ES	09/00 ▸	6453EN	**699216**	6453JH	**699716**	SD6V12
2.0 i 16V 10046 ▸	E	1997	EW10J4	ES	05/04 ▸ 08/05			6453QF	**813824**	SD7V12
2.0 i 16V	E	1997	EW10J4	ES	09/00 ▸ 12/01			6453JP	**699738**	SD6V12
2.0 i 16V 10046 ▸	E	1997	EW10J4	ES	04/04 ▸ 08/05	648714	•**813317**	6453XK	**813817**	SD7V12
2.0 i 16V	E	1998	XU10J4RS	ES	09/00 ▸	6453FE	**699236** ⊃MQ	6453GA	**699736**	SD7V16
1.4 HDi	D	1398	DV4TD	ES	01/03 ▸ 08/05			6453TH	**813812**	SD7V16
1.4 HDi	D	1398	DV4TD	ES	01/03 ▸ 08/05			6453YK	**813820**	SD7V16
1.9 D ▸ 8987	D	1868	DW8B	ES	09/00 ▸ 06/01	6453FE	**699236** ⊃MQ	6453GA	**699736**	SD7V16
1.9 D 9156 ▸	D	1868	DW8B	ES	12/01 ▸	6453TE	**699272** ⊃MQ	6453LR	**699772**	SD7V16
2.0 HDi ▸ 8987	D	1997	DW10TD	ES	09/00 ▸ 06/01	6453FE	**699236** ⊃MQ	6453GA	**699736**	SD7V16
2.0 HDi 9156 ▸	D	1997	DW10ATED, DW10TD	ES	12/01 ▸	6453TE	**699272** ⊃MQ	6453LR	**699772**	SD7V16
XSARA PICASSO										
1.6 i ▸ 9162	E	1587	TU5JP	ES	12/99 ▸ 12/01	6453CN	**699190** ⊃MQ	6453JG	**699690**	SD6V12
1.6 i	E	1587	TU5JP	ES	12/01 ▸ 05/04	6453LF	**813189** ⊃MQ	6453LH	**813689**	SD6V12
1.6 i	E	1587	TU5JP	ES	12/01 ▸ 11/02			6453JP	**699738**	SD6V12
1.6 i,1.6 i 16V 10048 ▸	E	1587	TU5JP,TU5JP4	ES	05/04 ▸			6453QE	**813824**	SD7V12
1.6 i,1.6 i 16V 10018 ▸	E	1587	TU5JP,TU5JP4	ES	05/04 ▸ 05/07	648714	•**813317**	6453XK	**813817**	SD7V12
1.8 i 16V ▸ 9491	E	1749	EW7J4	ES	12/99 ▸ 11/02	6453EN	**699216**	6453JH	**699716**	SD6V12
1.8 i 16V	E	1749	EW7J4	ES	11/02 ▸ 05/04	6453LF	**813189** ⊃MQ	6453LH	**813689**	SD6V12
1.8 i 16V 10048 ▸	E	1749	EW7J4	ES	05/04 ▸			6453QF	**813824**	SD7V12
1.8 i 16V 10048 ▸	E	1749	EW7J4	ES	05/04 ▸ 12/05	648714	•**813317**	6453XK	**813817**	SD7V12
2.0 i 16V	E	1997	EW10J4	ES	01/03 ▸ 05/04	6453LF	**813189** ⊃MQ	6453LH	**813689**	SD6V12
2.0 i 16V 10048 ▸	E	1997	EW10J4	ES	05/04 ▸ 12/05			6453QE	**813824**	SD7V12
2.0 i 16V 10048 ▸	E	1997	EW10J4	ES	05/04 ▸ 12/05	648714	•**813317**	6453XK	**813817**	SD7V12
1.6 HDi 16V	D	1560	DV6ATED4,DV6TED4	ES	03/04 ▸			6453YK	**813820**	SD7V16
2.0 HDi ▸ 9491/FV	D	1997	DW10TD	ES	12/99 ▸ 11/02	6453FE	**699236** ⊃MQ	6453GA	**699736**	SD7V16

• **New** Nouveau **Neu** Nuevo **Novo** Nuovo **Nieuw** Nowi **Новый** Novy **Nou** Yeni **Νέους**

⊃MQ : **Valeo Matching Quality** Valeo gleichwertige Qualität **Valeo Calidad Equivalente**
Część Valeo o Jakości Porównywalnej z Oryginałem

Use technical code cross-list for precise selection page 648
Utiliser les pages Cross-List (page 648) pour identifier la bonne référence
Verwenden Sie die Code-Vergleichsliste zur gezielten Suche des adäquaten Bauteils, Seite 648
Utilizar la lista de códigos cruzados para una selección precisa, página 648
Utilizzare la crosslist dei codici tecnici per una scelta precisa, pag. 648
Gebruik de lijst met verwijzingen naar de technische 648 voor de juiste keuze, op pagina 648
U yj listy kodów technicznych Valeo na stronie 648 dla precyzyjnego doboru
A se folosi paginile crosslist ca sa identifiati referita corecta
Χρησιμοποιήστε την λίστα αντιστοιχίων κωδικών για να κάνετε σωστή και ακριβή επιλογή, σελίδα 648

		cc				OE NEW	Valeo NEW	OE ES	Valeo ES	
CITROËN (.../...)										
XSARA PICASSO (.../...)										
2.0 HDi 9492/FV ▸	D	1997	DW10TD	ES	11/02 ▸	6453TE	**699272** ⊃MQ	6453LR	**699772**	SD7V16
2.0 HDi 9028/78 ▸ 10310/78	D	1997	DW10TD	ES	07/01 ▸ 01/05			6453KZ	**813806**	SD7V16
ZX										
1.1, 1.1 i	E	1124	TU1, TU1M, TU1M+	ES	03/91 ▸ 07/98			6453GN	**699522**	SD7H13
1.4	E	1360	TU3.2	ES	09/92 ▸ 07/94			6453GN	**699522**	SD7H13
1.6 i	E	1580	XU5M, XU5M2	ES	03/91 ▸ 08/93			6453FZ	**699518**	SD709
1.6 i	E	1580	XU5JP	ES	09/92 ▸ 07/98	6453P9		6453GE	**699520**	SD7H15
1.8 i, 1.8 i 16V	E	1761	XU7JP, XU7JP4	ES	09/92 ▸ 07/98	6453P9		6453GE	**699520**	SD7H15
1.9 i	E	1905	XU9JA	ES	03/91 ▸ 08/93			6453FZ	**699518**	SD709
2.0 i, 2.0 i 16V	E	1998	XU10J2C, XU10J4 XU10J4RS	ES	09/92 ▸ 07/98	6453P9		6453GE	**699520**	SD7H15
1.4 D	D	1360	TUD3	ES	07/94 ▸ 07/98			6453GN	**699522**	SD7H13
1.5 D	D	1527	TUD5	ES	07/94 ▸ 07/98			6453GN	**699522**	SD7H13
1.8 D	D	1769	XUD7	ES	09/92 ▸ 07/98	6453P9		6453GE	**699520**	SD7H15
1.9 D, 1.9 TD	D	1905	XUD9, XUD9A XUD9TE	ES	07/92 ▸ 07/98	6453P9		6453GE	**699520**	SD7H15
CITROËN										
BERLINGO (96>2002)										
Electrique	L		SA18	ES	05/98 ▸ 12/02	6453FE	**699236** ⊃MQ	6453GA	**699736**	SD7V16
1.1 i, 1.1 i GPL	E	1124	TU1M+	ES	07/96 ▸ 09/00	6453N1		6453GC	**699526**	SD7V12
1.1 i, 1.1 i GPL	E	1124	TU1JP, TU1M+	ES	09/00 ▸ 12/02	6453FS	**699237** ⊃MQ	6453JK	**699737**	SD6V12
1.4 i, 1.4 i GPL	E	1360	TU3JP	ES	07/96 ▸ 12/02	6453N1		6453GC	**699526**	SD7V12
1.4	E	1360	TU3.2	ES	07/96 ▸ 12/02			6453GN	**699522**	SD7H13
1.4, 1.4 i, 1.4 i GPL	E	1360	TU3.2, TU3JP	ES	09/00 ▸ 12/02	6453FS	**699237** ⊃MQ	6453JK	**699737**	SD6V12
1.8 i	E	1761	XU7JB	ES	07/97 ▸ 12/02	6453FE	**699236** ⊃MQ	6453GA	**699736**	SD7V16
1.8 D	D	1769	XUD7	ES	07/96 ▸ 12/02	6453FE	**699236** ⊃MQ	6453GA	**699736**	SD7V16
1.9 D	D	1868	DW8, DW8B	ES	07/98 ▸ 12/02	6453FE	**699236** ⊃MQ	6453GA	**699736**	SD7V16
1.9 D	D	1905	XUD9A	ES	07/96 ▸ 12/02	6453FE	**699236** ⊃MQ	6453GA	**699736**	SD7V16
2.0 HDi	D	1997	DW10TD	ES	10/99 ▸ 12/02	6453FE	**699236** ⊃MQ	6453GA	**699736**	SD7V16
BERLINGO (2002>)										
1.1 i	E	1124	TU1JP	ES	12/02 ▸	6453LF	**813189** ⊃MQ	6453LH	**813689**	SD6V12
1.1 i 10073 ▸	E	1124	TU1JP	ES	12/02 ▸ 08/05			6453QE	**813824**	SD7V12
1.1 i 10073 ▸	E	1124	TU1JP	ES	06/04 ▸ 08/05	648714	•**813317**	6453XK	**813817**	SD7V12
1.4 i GNV,1.4 i GPL 10073 ▸	F	1360	TU3JP	ES	04/03 ▸ 05/08			6453QE	**813824**	SD7V12
1.4 i GNV,1.4 i GPL 10073 ▸	F	1360	TU3JP	ES	04/03 ▸ 09/10	648714	•**813317**	6453XK	**813817**	SD7V12
1.4 i	E	1360	TU3A,TU3JP	ES	12/02 ▸			6453QE	**813824**	SD7V12
1.4 i	E	1360	TU3JP	ES	12/02 ▸	6453LF	**813189** ⊃MQ	6453LH	**813689**	SD6V12

You must replace the receiver drier with the compressor
Vous devez remplacer la bouteille déshydratante avec le compresseur
Tauschen Sie den Trockner mit dem Kompressor
Es obligatorio cambiar el Filtro Deshidratante con el Compresor
Tem de substituir o filtro desidratante com o compressor
E' necessario cambiare il filtro disidratatore con il compressore
U moet de filterdroger samen met de compressor vervangen

Musisz wymienić filtr osuszacz przy wymianie sprę arki
Рекомендируем замену осушителя вместо с компрессором
Při výměně kompresoru je nutné vyměnit také vysoušeč
Nu uitați sa schimbați uscatorul cu compresorul
Kompresörle birlikte nem alıcıyı da değiştirin
Πρέπει να αντικαταστήσετε το φίλτρο υγρού μαζί με το συμπιεστή

		cc				OE NEW	Valeo NEW	OE ES	Valeo ES	
CITROËN (.../...)										
BERLINGO (2002>) (.../...)										
1.4 i	E	1360	TU3A,TU3JP	ES	06/04 ▸ 05/08	648714	•**813317**	6453XK	**813817**	SD7V12
1.6 i 16V	E	1587	TU5JP4	ES	12/02 ▸	6453LF	**813189** ⊃MQ	6453LH	**813689**	SD6V12
1.6 i 16V 10073 ▸	E	1587	TU5JP4	ES	12/02 ▸ 05/08			6453QE	**813824**	SD7V12
1.6 i 16V 10073 ▸	E	1587	TU5JP4	ES	06/04 ▸ 05/08	648714	•**813317**	6453XK	**813817**	SD7V12
1.6 HDi 16V	D	1560	DV6ATED4,DV6BTED4	ES	01/06 ▸ 05/08			6453YK	**813820**	SD7V16
1.9 D	D	1868	DW8B	ES	12/02 ▸	6453TE	**699272** ⊃MQ	6453LR	**699772**	SD7V16
2.0 HDi	D	1997	DW10TD	ES	12/02 ▸	6453TE	**699272** ⊃MQ	6453LR	**699772**	SD7V16
BERLINGO (2008>)										
1.6 i 16V	E	1587	TU5JP4,TU5JP4B		05/08 ▸	6453WK	**813162**			SD7C16
1.6 i 16V	E	1587	TU5JP4,TU5JP4B	ES	05/08 ▸	648708	•**813223**	6453WL	**813723**	SD6C12
DISPATCH (2004>2006)										
1.9 D	D	1868	DW8B	ES	01/04 ▸	6453TE	**699272** ⊃MQ	6453LR	**699772**	SD7V16
1.9 D ▸ 10618	D	1868	DW8B	ES	01/04 ▸ 12/05	6453FE	**699236** ⊃MQ	6453GA	**699736**	SD7V16
1.9 D 10619 ▸	D	1868	DW8B	ES	12/05 ▸ 12/06			6453QW	**813810**	SD7V16
2.0 HDi	D	1997	DW10BTED DW10BTED+L4	ES	01/04 ▸	6453TE	**699272** ⊃MQ	6453LR	**699772**	SD7V16
2.0 HDi ▸ 10618	D	1997	DW10BTED DW10BTED+L4	ES	01/04 ▸ 12/05	6453FE	**699236** ⊃MQ	6453GA	**699736**	SD7V16
2.0 HDi 10619 ▸	D	1997	DW10BTED DW10BTED+L4	ES	12/05 ▸ 12/06			6453QW	**813810**	SD7V16
DISPATCH (2007>)										
2.0 i 16V	E	1997	EW10A	ES	03/07 ▸			6453YK	**813820**	SD7V16
1.6 HDi 16V	D	1560	DV6UTED4	ES	01/07 ▸			6453YK	**813820**	SD7V16
2.0 HDi 16V	D	1997	DW10BTED4 DW10UTED4		01/07 ▸	6453YW	•**813322**	6453YX		SD7V16
2.0 HDi 16V	D	1997	DW10BTED4 DW10UTED4	ES	01/07 ▸			6453TC	**813811**	SD7V16
2.0 HDi 16V	D	1997	DW10BTED4 DW10UTED4	ES	01/07 ▸			6453VC	**813813**	SD7V16
JUMPER (94>2001)										
2.0 i	E	1998	XU10J2U	ES	02/94 ▸ 12/01	6453P9		6453GE	**699520**	SD7H15
1.9 D, 1.9 TD	D	1905	XUD9A, XUD9AU XUD9TEF, XUD9UTF	ES	02/94 ▸ 12/01	6453P9		6453GE	**699520**	SD7H15
2.0 HDi	D	1997	DW10TD	ES	09/01 ▸ 12/01	6453FE	**699236** ⊃MQ	6453GA	**699736**	SD7V16
2.5 D, 2.5 TD, 2.5 TDi	D	2446	DJ5, DJ5T, DJ5TED	ES	02/94 ▸ 12/01	6453T0		6453GQ	**699528**	SD7H15
2.8 D	D	2798	8140-63	ES	06/99 ▸ 12/01	6453FE	**699236** ⊃MQ	6453GA	**699736**	SD7V16
2.8 HDi	D	2798	8140-43S	ES	09/00 ▸ 12/01			6453NR	**813808**	SD7H15
JUMPER (2002>2006)										
2.0 i	E	1998	XU10J2U	ES	01/02 ▸ 06/06	6453FE	**699236** ⊃MQ	6453GA	**699736**	SD7V16
2.0 HDi	D	1997	DW10UTD	ES	01/02 ▸ 06/06	6453FE	**699236** ⊃MQ	6453GA	**699736**	SD7V16

• **New** Nouveau **Neu** Nuevo **Novo** Nuovo **Nieuw** Nowi **Новый** Novy **Nou** Yeni **Νέους**

⊃MQ : **Valeo Matching Quality** Valeo gleichwertige Qualität **Valeo Calidad Equivalente**
Część Valeo o Jakości Porównywalnej z Oryginałem

Use technical code cross-list for precise selection page 648
Utiliser les pages Cross-List (page 648) pour identifier la bonne référence
Verwenden Sie die Code-Vergleichsliste zur gezielten Suche des adäquaten Bauteils, Seite 648
Utilizar la lista de códigos cruzados para una selección precisa, página 648
Utilizzare la crosslist dei codici tecnici per una scelta precisa, pag. 648
Gebruik de lijst met verwijzingen naar de technische 648 voor de juiste keuze, op pagina 648
U yj listy kodów technicznych Valeo na stronie 648 dla precyzyjnego doboru
A se folosi paginile crosslist ca sa identifiati referita corecta
Χρησιμοποιήστε την λίστα αντιστοιχίων κωδικών για να κάνετε σωστή και ακριβή επιλογή, σελίδα 648

		cc				OE NEW	Valeo NEW	OE ES	Valeo ES	
CITROËN (.../...)										
JUMPER (2002>2006) (.../...)										
2.2 HDi	D	2179	DW12TED	ES	01/02 ▸ 06/06	6453FE	**699236** MQ	6453GA	**699736**	SD7V16
2.8 HDi	D	2798	F28TDCR	ES	01/02 ▸ 06/06			6453NR	**813808**	SD7H15
JUMPY										
2.0 i 16V	E	1997	EW10J4	ES	09/00 ▸ 12/03	6453CL	**699199**		**699699**	SD7V16
JUMPY (95>2003)										
1.9 D	D	1868	DW8, DW8B	ES	11/99 ▸ 12/03	6453FE	**699236** MQ	6453GA	**699736**	SD7V16
1.9 D, 1.9 TD	D	1905	XUD9A, XUD9BTF XUD9TF	ES	09/95 ▸ 12/03	6453FE	**699236** MQ	6453GA	**699736**	SD7V16
2.0 HDi, 2.0 HDi 16V	D	1997	DW10ATED/4 DW10BTED/CTED	ES	09/00 ▸ 12/03	6453FE	**699236** MQ	6453GA	**699736**	SD7V16
JUMPY (2004>2006)										
2.0 i 16V	E	1997	EW10J4	ES	01/04 ▸ 12/06	6453CL	**699199**		**699699**	SD7V16
2.0 i 16V 10619 ▸	E	1997	EW10J4	ES	12/05 ▸ 12/06			6453YK	**813820**	SD7V16
1.9 D	D	1868	DW8B	ES	01/04 ▸ 12/06	6453FE	**699236** MQ	6453GA	**699736**	SD7V16
1.9 D 10619 ▸	D	1868	DW8B	ES	12/05 ▸ 12/06			6453QW	**813810**	SD7V16
2.0 HDi	D	1997	DW10BTED DW10BTED/L4	ES	01/04 ▸ 12/06	6453FE	**699236** MQ	6453GA	**699736**	SD7V16
2.0 HDi,2.0 HDi 16V 10619 ▸	D	1997	DW10ATED4 DW10BTED DW10BTED+L4	ES	12/05 ▸ 12/06			6453QW	**813810**	SD7V16
JUMPY (2007>)										
2.0 i 16V 11452 ▸	E	1997	EW10A	ES	03/07 ▸			6453YK	**813820**	SD7V16
1.6 HDi 16V 11452 ▸	D	1560	DV6UTED4	ES	01/07 ▸			6453YK	**813820**	SD7V16
2.0 HDi 16V	D	1997	DW10BTED4 DW10UTED4	ES	03/07 ▸			6453VC	**813813**	SD7V16
2.0 HDi 16V	D	1997	DW10BTED4 DW10UTED4		01/07 ▸	6453YW	•**813322**	6453YX		SD7V16
2.0 HDi 16V	D	1997	DW10BTED4 DW10UTED4	ES	01/07 ▸			6453TC	**813811**	SD7V16
NEMO										
1.4 i	E	1360	TU3A	ES	12/07 ▸			6453QH	**813809**	SD6V12
1.4 i	E	1360	TU3A,TU3AE5	ES	12/07 ▸	648722	•**813317**	6453XK	**813817**	SD7V12
1.4 HDi	D	1398	DV4TED	ES	12/07 ▸			6453QH	**813809**	SD6V12
1.4 HDi	D	1398	DV4TED	ES	12/07 ▸	648722	•**813317**	6453XK	**813817**	SD7V12
RELAY (94>2001)										
2.0 i	E	1998	XU10J2U	ES	02/94 ▸ 08/98	6453P9		6453GE	**699520**	SD7H15
1.9 D, 1.9 TD	D	1905	XUD9A, XUD9UTF	ES	02/94 ▸ 12/01	6453P9		6453GE	**699520**	SD7H15
2.8 HDi	D	2798	8140-43S	ES	09/00 ▸ 12/01			6453NR	**813808**	SD7H15
RELAY (2002>2006)										
2.0 i	E	1998	XU10J2U	ES	01/02 ▸ 06/06	6453FE	**699236** MQ	6453GA	**699736**	SD7V16
2.0 HDi	D	1997	DW10UTD	ES	01/02 ▸ 06/06	6453FE	**699236** MQ	6453GA	**699736**	SD7V16

You must replace the receiver drier with the compressor
Vous devez remplacer la bouteille déshydratante avec le compresseur
Tauschen Sie den Trockner mit dem Kompressor
Es obligatorio cambiar el Filtro Deshidratante con el Compresor
Tem de substituir o filtro desidratante com o compressor
E' necessario cambiare il filtro disidratatore con il compressore
U moet de filterdroger samen met de compressor vervangen
Musisz wymienić filtr osuszacz przy wymianie sprę arki
Рекомендируем замену осушителя вместо с компрессором
Při výměně kompresoru je nutné vyměnit také vysoušeč
Nu untați sa schimbați uscatorul cu compresorul
Kompresörle birlikte nem alıcıyı da değiştirin
Πρέπει να αντικαταστήσετε το φίλτρο υγρού μαζί με το συμπιεστή

		cc				OE NEW	Valeo NEW	OE ES	Valeo ES	
CITROËN (.../...)										
RELAY (2002>2006) (.../...)										
2.2 HDi	D	2179	DW12TED	ES	01/02 ▸ 06/06	6453FE	**699236** ⊃MQ	6453GA	**699736**	SD7V16
2.8 HDi	D	2798	F28TDCR	ES	01/02 ▸ 06/06			6453NR	**813808**	SD7H15
DACIA										
DUSTER										
1.5 dCi	D	1461	K9K.7.96/8.92/8.94/8.96		03/10 ▸	926009154R	**813256**			DKV11
LODGY										
1.5 dCi,1.5 dCi 110	D	1461	K9K.6.12,K9K.8.46		04/12 ▸	926009154R	**813256**			DKV11
1.6 MPI 85	E	1598	K7M.8.12		04/12 ▸	926009154R	**813256**			DKV11
LOGAN										
1.4 MPI	E	1390	K7J	ES	09/04 ▸	8200117767			**699914**	SD7V16
1.6 MPI	E	1598	K7M	ES	09/04 ▸	8200117767			**699914**	SD7V16
1.6 i 16V	E	1598	K4M.6.90,K4M.6.94	ES	10/06 ▸			7711497531	**813827**	SD7V16
1.6 i 16V	E	1598	K4M		10/06 ▸	8200802609	**813198**			SD7V16
1.5 Dci 070215 ▸	D	1461	K9K		02/07 ▸	8200802609	**813198**			SD7V16
1.5 dCi 070215 ▸	D	1461	K9K.7.92,K9K.7.94 K9K.7.96	ES	01/07 ▸ 04/11			7711497531	**813827**	SD7V16
1,5 dCi	D	1461	K9K.8.92		05/11 ▸	926009154R	**813256**			DKV11
SANDERO										
1.6 MPI 90	E	1598	K7M.7.14	ES	06/08 ▸			7711497531	**813827**	SD7V16
1.5 dCi	D	1461	K9K.7.92,K9K.7.96	ES	09/08 ▸			7711497531	**813827**	SD7V16
1.5 dCi,1.5 dCi 70	D	1461	K9K.7.92		09/08 ▸	926009154R	**813256**			DKV11
DAEWOO										
LANOS										
1.3 i	E	1349	A13SMS		09/97 ▸	96255980	**813159**			V5
1.5 i	E	1498	A15SMS		09/97 ▸	96255980	**813159**			V5
1.6 i 16V	E	1598	A16DMS		09/97 ▸	96255980	**813159**			V5
DAF										
75										
75.240, 75.270, 75.300	D	8650	RS 180/200/222		07/92 ▸ 02/98	1638737	**813019**			SD7H15
85										
85.330, 85.360, 85.400	D	11600	WS 242, WS 295 M WS268		07/92 ▸ 02/98	1264800	**813019**			SD7H15
95										
95.310, 95.330, 95.350 95.360, 95.380, 95.400	D	11600	WS 225/242/259 WS 268/282/295		09/87 ▸ 01/93	1638737	**813019**			SD7H15
95.430	D	11600	WS 315/315 G/L/M		02/92 ▸ 01/98	1264800	**813019**			SD7H15
FIAT										
ALBEA										
1.2 i, 1.2 i 16V	E	1242	188A4/A5.000		04/02 ▸	46785772	**699283**			SC08C
1.3 JTD 16V	D	1248	188A9.000		09/03 ▸ 01/04	46819144	**813167**			SCSC06C

• **New** Nouveau **Neu** Nuevo **Novo** Nuovo **Nieuw** Nowi **Новый** Novy **Nou** Yeni **Νέους**

⊃MQ : **Valeo Matching Quality** Valeo gleichwertige Qualität **Valeo Calidad Equivalente** Część Valeo o Jakości Porównywalnej z Oryginalem

Use technical code cross-list for precise selection page 648
Utiliser les pages Cross-List (page 648) pour identifier la bonne référence
Verwenden Sie die Code-Vergleichsliste zur gezielten Suche des adäquaten Bauteils, Seite 648
Utilizar la lista de códigos cruzados para una selección precisa, página 648
Utilizzare la crosslist dei codici tecnici per una scelta precisa, pag. 648
Gebruik de lijst met verwijzingen naar de technische 648 voor de juiste keuze, op pagina 648
U yj listy kodów technicznych Valeo na stronie 648 dla precyzyjnego doboru
A se folosi paginile crosslist ca sa identifiati referita corecta
Χρησιμοποιήστε την λίστα αντιστοιχίων κωδικών για να κάνετε σωστή και ακριβή επιλογή, σελίδα 648

						OE NEW	Valeo NEW	OE ES	Valeo ES	
		cc								
FIAT (.../...)										
BARCHETTA (95>2003)										
1.8 i 16V	E	1747	183A1.000		05/95 ▸ 09/00	46438366	**699290**			TV12SC
1.8 i 16V	E	1747	188A6.000		09/00 ▸ 06/03	46786262	**699284**			SCS08C
BARCHETTA (2003>)										
1.8 i 16V	E	1747	188A6.000		07/03 ▸	46819144	**813167**			SCSC06C
BRAVA										
1.2 i 16V	E	1242	188A5.000		10/98 ▸	46785772	**699283**			SC08C
1.2 i 16V	E	1242	182B2.000		10/98 ▸	46514443	**699280**			SC08C
1.4 i, 1.4 i 12V	E	1372	182A3/A5.000		06/95 ▸ 09/98	46438366	**699290**			TV12SC
1.6 i, 1.6 i 16V	E	1581	182A4.027 182A4/A6.000		06/95 ▸	46438576	**699289**			TV12SC
1.6 i 16V	E	1596	182B6.000		10/98 ▸	46438576	**699289**			TV12SC
1.8 i, 1.8 i 16V ▸ 4873621	E	1747	182A2.000		06/95 ▸ 07/99	46438366	**699290**			TV12SC
1.9 TD	D	1910	182A7/A8.000		03/96 ▸	46438366	**699290**			TV12SC
1.9 JTD	D	1910	182B4.000		10/98 ▸	60815788	**699284**			SCS08C
1.9 D	D	1929	160A7.000	ES	06/95 ▸ 09/98	7767200	**699075**		**699575**	V5
BRAVO										
1.2 i 16V	E	1242	188A5.000		10/98 ▸	46785772	**699283**			SC08C
1.2 i 16V	E	1242	182B2.000		10/98 ▸	46514443	**699280**			SC08C
1.4 i	E	1372	182A3/A5.000		06/95 ▸ 09/98	46438366	**699290**			TV12SC
1.6 i 16V	E	1581	182A4/A6.000		06/95 ▸	46438576	**699289**			TV12SC
1.6 i 16V	E	1596	182B6.000		10/98 ▸	46525369	**699391**			V5
1.8 i 16V	E	1747	182A2.000		06/95 ▸ 07/99	46438366	**699290**			TV12SC
2.0 i 20V	E	1998	182A1.000 182B7.000		06/95 ▸	46514137	**699281**			TV12SC
1.9 TD	D	1910	182A7/A8.000		03/96 ▸	46438366	**699290**			TV12SC
1.9 JTD	D	1910	182B4/B9.000		10/98 ▸	60815788	**699284**			SCS08C
1.9 D	D	1929	160A7.000	ES	06/95 ▸ 09/98	7767200	**699075**		**699575**	V5
CINQUECENTO										
1.1 i	E	1108	176B2.000		10/94 ▸ 02/98	46443509	**699212**			SD7B10
COUPE										
1.8 i 16V	E	1747	183A1.000		11/93 ▸ 09/96	46438366	**699290**			TV12SC
2.0 i 16V, 2.0 i Turbo 16V	E	1995	175A1.000 836A3.000/011		11/93 ▸ 09/96	7746258	**699147**			SD7H15
2.0 i Turbo 20V	E	1998	175A3.000		07/96 ▸	46514137	**699281**			TV12SC
CROMA (85>90)										
2000 ie	E	1995	154C, 834B.000	ES	10/85 ▸ 12/90	7774059			**699598**	SD709
2500 TD	D	2500	8144-97	ES	07/88 ▸ 12/90	4846601			**699599**	SD709
CROMA (91>96)										
2.0 CHT, 2.0 ie, 2.0 ie 16V **2.0 ie Turbo**	E	1995	154C3/4.046 154C3/4/5.000 154E1.000 834B.146	ES	01/91 ▸ 08/96	7774059			**699598**	SD709
2.5 TD	D	2500	8144-97Y/7		01/91 ▸ 08/96	98453640	**699101**			SD7H15
2.5 TD	D	2500	8144-97, 8144-97S	ES	01/91 ▸ 08/96	4846601			**699599**	SD709
CROMA II (2005>)										
1.9 JTD **1.9 JTD Multijet 16V**	D	1910	939A1.000 939A2.000	ES	06/05 ▸	51760316	•**699368**	13171593	**699868**	SD7V16

You must replace the receiver drier with the compressor
Vous devez remplacer la bouteille déshydratante avec le compresseur
Tauschen Sie den Trockner mit dem Kompressor
Es obligatorio cambiar el Filtro Deshidratante con el Compresor
Tem de substituir o filtro desidratante com o compressor
E' necessario cambiare il filtro disidratatore con il compressore
U moet de filterdroger samen met de compressor vervangen

Musisz wymienić filtr osuszacz przy wymianie sprę arki
Рекомендируем замену осушителя вместо с компрессором
Při výměně kompresoru je nutné vyměnit také vysoušeč
Nu uitați sa schimbați uscatorul cu compresorul
Kompresörle birlikte nem alıcıyı da değiştirin
Πρέπει να αντικαταστήσετε το φίλτρο υγρού μαζί με το συμπιεστή

		cc				OE NEW	Valeo NEW	OE ES	Valeo ES	
FIAT (.../...)										
IDEA										
1.2 i 16V	E	1242	188A5.000		02/04 ▸	46782669	**813171**			SCSB06C
1.4 i 16V	E	1368	192B2.000 843A1.000		10/03 ▸	46782669	**813171**			SCSB06C
1.3 JTD Multijet 16V	D	1248	188A9.000		10/03 ▸ 01/04	46819144	**813167**			SCSC06C
LINEA (2007>)										
1.4 i	E	1368	350A1.000		07/07 ▸	55194880	**813197**			5SL12C
MAREA										
1.2 i 16V	E	1242	182B2.000		02/99 ▸	46514443	**699280**			SC08C
1.4 i 12V	E	1372	182A3.000		07/96 ▸ 01/99	46438366	**699290**			TV12SC
1.6 i 16V **1.6 i Bipower 16V**	E	1581	182A3/4.000 182B5.098		07/96 ▸	46438576	**699289**			TV12SC
1.6 i 16V	E	1596	182B6.000		02/99 ▸ 09/02	46809223	**699373**			5SL12C
1.6 i 16V	E	1596	182B6.000		02/99 ▸	46525369	**699391**			V5
1.8 i 16V	E	1747	182A2.000		07/96 ▸	46438366	**699290**			TV12SC
2.0 i 20V	E	1998	182A1/B7.000		07/96 ▸	46514137	**699281**			TV12SC
1.9 TD	D	1910	182A7/A8.000		07/96 ▸	46438366	**699290**			TV12SC
1.9 TD	D	1910	182A7/A8.000		07/96 ▸ 01/99	46514137	**699281**			TV12SC
1.9 JTD	D	1910	182B9.000		02/99 ▸	60815788	**699284**			SCS08C
2.4 TD	D	2387	185A2.000		07/96 ▸ 01/99	46479556	**699279**			TV12SC
2.4 TD	D	2387	185A2.000		07/96 ▸ 01/99	46514137	**699281**			TV12SC
MARENGO (159) (89>93)										
1.9 D, 1.9 TDs	D	1929	160A6/A7.000	ES	11/89 ▸ 02/93	7604446			**699715**	V5
MARENGO (159) (93>95)										
1.9 D, 1.9 TD	D	1929	160A6/A7.000	ES	02/93 ▸ 01/95	7767200	**699075**		**699575**	V5
MARENGO (185) (95>)										
1.9 JTD, 1.9 TD	D	1910	182A7/A8.000 182B4.000		01/95 ▸	46438366	**699290**			TV12SC
MULTIPLA (98>2003)										
1.6 i 16V **1.6 i Bipower 16V** **1.6 i Blupower 16V**	E	1581	182A4.000 186A3/A4.000		11/98 ▸	46525369	**699391**			V5
1.6 i Bipower 16V	E	1596	182B6.000		08/00 ▸	46525369	**699391**			V5
MULTIPLA (2004>)										
1.6 i 16V **1.6 i Bi Power 16V**	E	1596	182B6.000		07/04 ▸	55192057	**699391**			V5
PALIO										
1.2 i	E	1242	178B5/7.045 178C4.066 188A4.000		04/96 ▸ 02/01	46514443	**699280**			SC08C
1.2 i, 1.2 i 16V	E	1242	188A4/A5.000		03/01 ▸	46785772	**699283**			SC08C
1.7 TD	D	1697	176A3.000		09/97 ▸	7736928	**699288**			TV14EC
1.9 D	D	1910	223A6.000		09/97 ▸ 02/01	46757907	**699284**			SCS08C
PANDA (2003>)										
1.1 i	E	1108	187A1.000		09/03 ▸	46782669	**813171**			SCSB06C
1.2 i	E	1242	188A4.000		09/03 ▸	46782669	**813171**			SCSB06C
1.3 JTD 16V	D	1248	188A9.000		09/03 ▸	46819144	**813167**			SCSC06C

• **New** Nouveau **Neu** Nuevo **Novo** Nuovo **Nieuw** Nowi **Новый** Novy **Nou** Yeni **Νέους**

MQ : Valeo Matching Quality Valeo gleichwertige Qualität **Valeo Calidad Equivalente**
Część Valeo o Jakości Porównywalnej z Oryginałem

Use technical code cross-list for precise selection page 648
Utiliser les pages Cross-List (page 648) pour identifier la bonne référence
Verwenden Sie die Code-Vergleichsliste zur gezielten Suche des adäquaten Bauteils, Seite 648
Utilizar la lista de códigos cruzados para una selección precisa, página 648
Utilizzare la crosslist dei codici tecnici per una scelta precisa, pag. 648
Gebruik de lijst met verwijzingen naar de technische 648 voor de juiste keuze, op pagina 648
U yj listy kodów technicznych Valeo na stronie 648 dla precyzyjnego doboru
A se folosi paginile crosslist ca sa identifiati referita corecta
Χρησιμοποιήστε την λίστα αντιστοιχίων κωδικών για να κάνετε σωστή και ακριβή επιλογή, σελίδα 648

		cc				OE NEW	Valeo NEW	OE ES	Valeo ES	
FIAT (.../...)										
PUNTO (93>99)										
1.1 i	E	1108	176A6/B2.000		07/93 ▸ 09/99	7765865	**699286**			TV12EC
1.2 i, 1.2 i 16V	E	1242	176A7/A8.000 176B1/B4/B9.000		07/93 ▸ 09/99	7765865	**699286**			TV12EC
1.6 i	E	1581	176A9.000		11/93 ▸ 04/97	7741901	**699287**			TV14EC
1.7 D, 1.7 TD	D	1697	176A3.000/F 176A5.000 176B3/B7.000		07/93 ▸ 09/99	7736928	**699288**			TV14EC
PUNTO II (99>2003)										
1.2 i, 1.2 i 16V	E	1242	188A4/A5.000		07/99 ▸	46757168	**699283**			SC08C
1.2 i, 1.2 i 16V	E	1242	188A4/A5.000		01/02 ▸ 06/03	46782669	**813171**			SCSB06C
1.8 i 16V	E	1747	183A1.000		07/99 ▸ 06/03	46438366	**699290**			TV12SC
1.8 i 16V	E	1747	188A6.000		05/03 ▸ 06/03	46819144	**813167**			SCSC06C
1.9 D, 1.9 JTD	D	1910	188A2/A3.000 188A7.000		07/99 ▸ 06/03	46786262	**699284**			SCS08C
1.9 D, 1.9 JTD	D	1910	188A2/A3.000 188A7.000		04/03 ▸ 06/03	46819144	**813167**			SCSC06C
PUNTO II (2003>)										
1.2 i, 1.2 i 16V **1.2 i Bipower**	E	1242	188A4/A5.000		07/03 ▸	46782669	**813171**			SCSB06C
1.4 i 16V	E	1368	843A1.000		07/03 ▸	46782669	**813171**			SCSB06C
1.8 i 16V	E	1747	188A6.000		07/03 ▸	46819144	**813167**			SCSC06C
1.3 JTD 16V	D	1248	188A9.000		07/03 ▸	46819144	**813167**			SCSC06C
1.9 JTD	D	1910	188A7/B2.000		07/03 ▸	46819144	**813167**			SCSC06C
PUNTO EVO (2009>)										
1.2 i 65	E	1242	199A4.000		10/09 ▸ 2011	55194880	**813197**			5SL12C
1.4 i 16V	E	1368	199A7.000 350A1.000 955A6.000		10/09 ▸ 2011	55194880	**813197**			5SL12C
1.4 MP,1.4 i GPL	F	1368	350A1.000 GNV 350A1.000 GPL		10/09 ▸ 2011	55194880	**813197**			5SL12C
GRANDE PUNTO										
1.2 i 8V	E	1242	199A4.000		10/05 ▸	55194880	**813197**			5SL12C
1.4 MPi 8V, 1.4 i 8V	E	1368	350A1.000		10/05 ▸	55194880	**813197**			5SL12C
QUBO										
1.4 i 77	E	1368	350A1.000 GNV		10/09 ▸	55194880	**813197**			5SL12C
SEICENTO										
0.9 i	E	899	1170A1.046F		03/98 ▸ 08/00	46443509	**699212**			SD7B10
1.1 i	E	1108	176B2.000 187A1.000		03/98 ▸	46443509	**699212**			SD7B10
SIENA (97>2001)										
1.2 i	E	1242	178B5.000 178B7.045 178C4.066		09/98 ▸	46514443	**699280**			SC08C
1.7 D, 1.7 TD	D	1697	176B3.000 178C9.066		09/98 ▸	7736928	**699288**			TV14EC
SIENA (2002>)										
1.2 i, 1.2 i 16V	E	1242	178D7055 188A4/A5.000		01/02 ▸	46785772	**699283**			SC08C

You must replace the receiver drier with the compressor
Vous devez remplacer la bouteille déshydratante avec le compresseur
Tauschen Sie den Trockner mit dem Kompressor
Es obligatorio cambiar el Filtro Deshidratante con el Compresor
Tem de substituir o filtro desidratante com o compressor
E' necessario cambiare il filtro disidratatore con il compressore
U moet de filterdroger samen met de compressor vervangen

Musisz wymienić filtr osuszacz przy wymianie sprę arki
Рекомендируем замену осушителя вместо с компрессором
Při výměně kompresoru je nutné vyměnit také vysoušeč
Nu untați sa schimbați uscatorul cu compresorul
Kompresörle birlikte nem alıcıyı da değiştirin
Πρέπει να αντικαταστήσετε το φίλτρο υγρού μαζί με το συμπιεστή

		cc				OE NEW	Valeo NEW	OE ES	Valeo ES	

FIAT (.../...)

STILO (2001>2004)

1.2 i 16V	E	1242	188A5.000		09/01 ▸ 12/03	46782669	**813171**			SCSB06C
1.6 i 16V	E	1596	178E7.000 182B6.000 192B3.000		09/01 ▸ 12/02	46809223	**699373**			5SL12C
1.6 i 16V	E	1596	182B6.000		01/03 ▸ 12/03	46811244	**699374**			5SL12C
1.8 i 16V	E	1747	192A4.000		01/03 ▸ 12/03	46811244	**699374**			5SL12C
2.4 i 20V	E	2446	192A2.000		09/01 ▸	46759036	**699311**			SD6V12
1.9 JTD	D	1910	192A1/A3.000		09/01 ▸ 12/03	46811244	**699374**			5SL12C

STILO (2004>)

1.4 16V, 1.4 i 16V	E	1368	192B2.000 843A1.000		01/04 ▸	46782669	**813171**			SCSB06C
1.8 16V, 1.8 i 16V	E	1747	192A4.000		01/04 ▸	46811244	**699374**			5SL12C
1.9 JTD, 1.9 JTD 16V 1.9 JTD Multijet/16V	D	1910	192A1/3/4.000 192A5/B1.000		01/04 ▸	46811244	**699374**			5SL12C

TEMPRA

1.4, 1.4 ie	E	1372	159A2/160A1 836A4.000		11/89 ▸ 06/96	7773398	**699076**			V5
1.4 ie	E	1372	160A1.046	ES	03/93 ▸ 06/96	7576000			**699568**	V5
1.6, 1.6 ie	E	1581	159A3/B9,000 835C1.000		11/89 ▸ 06/96	7773398	**699076**			V5
1.8 ie	E	1756	159A4.000	ES	11/89 ▸ 02/93	7774059			**699598**	SD709
1.8 ie, 1.8 ie 16V	E	1756	159A4, 835C2/C4 836A5		02/90 ▸ 06/96	7746258	**699147**			SD7H15
2.0 ie	E	1995	159A6.046		02/90 ▸ 02/93	7773398	**699076**			V5
2.0 ie	E	1995	159A6.046		02/93 ▸ 06/96	7746258	**699147**			SD7H15
1.9 D, 1.9 TDs	D	1929	160A6/A7.000 160B6.046	ES	11/89 ▸ 02/93	7604446			**699715**	V5
1.9 D, 1.9 TD	D	1929	160A6/7.000 160D1.000	ES	03/93 ▸ 06/96	7767200	**699075**		**699575**	V5

TIPO

1.4, 1.4 ie	E	1372	160A1.000 160A1.046	ES	01/88 ▸ 02/93	7576000			**699568**	V5
1.4, 1.4 ie	E	1372	159A2, 160A1 836A4		03/93 ▸ 10/95	7773398	**699076**			V5
1.6	E	1581	160A2.000	ES	01/88 ▸ 02/93	7576000			**699568**	V5
1.6, 1.6 ie	E	1581	159A3, 835C1		03/93 ▸ 10/95	7773398	**699076**			V5
1.8 ie, 1.8 ie 16V	E	1756	159A4, 160A5	ES	04/89 ▸ 02/93	7774059			**699598**	SD709
1.8 ie	E	1756	835C2.000 836A5.000		03/93 ▸ 10/95	7746258	**699147**			SD7H15
2.0 ie 16V	E	1995	160A8.046	ES	03/91 ▸ 02/93	7774059			**699598**	SD709
2.0 ie, 2.0 ie 16V	E	1995	1540, 159A5/6 836A3		06/90 ▸ 10/95	7746258	**699147**			SD7H15
1.7 D	D	1697	149B4.000	ES	01/88 ▸ 02/93	7604446			**699715**	V5
1.9 D, 1.9 TDs	D	1929	160A6/A7, 160B6	ES	01/88 ▸ 02/93	7604446			**699715**	V5
1.9 D, 1.9 TD	D	1929	160A6/A7, 160D1	ES	03/93 ▸ 10/95	7767200	**699075**		**699575**	V5

ULYSSE (94>98)

1.8 ie	E	1761	LFW	ES	03/96 ▸ 09/98	9613260680	**699236** ⊃MQ		**699736**	SD7V16
2.0 ie, 2.0 ie Turbo	E	1998	RFU, RGX	ES	06/94 ▸ 09/98	9613260680	**699236** ⊃MQ		**699736**	SD7V16
1.9 TD	D	1905	XUD9TEF/K/Y XUD9TEF/L3	ES	06/94 ▸ 09/98	9613260680	**699236** ⊃MQ		**699736**	SD7V16
2.1 TD	D	2088	P8C	ES	03/96 ▸ 09/98	9613260680	**699236** ⊃MQ		**699736**	SD7V16

• **New** Nouveau **Neu** Nuevo **Novo** Nuovo **Nieuw** Nowi **Новый** Novy **Nou** Yeni **Νέους**

⊃MQ : **Valeo Matching Quality** Valeo gleichwertige Qualität **Valeo Calidad Equivalente**
Część Valeo o Jakości Porównywalnej z Oryginałem

Use technical code cross-list for precise selection page 648
Utiliser les pages Cross-List (page 648) pour identifier la bonne référence
Verwenden Sie die Code-Vergleichsliste zur gezielten Suche des adäquaten Bauteils, Seite 648
Utilizar la lista de códigos cruzados para una selección precisa, página 648
Utilizzare la crosslist dei codici tecnici per una scelta precisa, pag. 648
Gebruik de lijst met verwijzingen naar de technische 648 voor de juiste keuze, op pagina 648
U yj listy kodów technicznych Valeo na stronie 648 dla precyzyjnego doboru
A se folosi paginile crosslist ca sa identifiati referita corecta
Χρησιμοποιήστε την λίστα αντιστοιχίων κωδικών για να κάνετε σωστή και ακριβή επιλογή, σελίδα 648

		CC				OE NEW	Valeo NEW	OE ES	Valeo ES	
FIAT (.../...)										
ULYSSE (98>2002)										
1.8 ie	E	1761	LFW	ES	10/98 ▸ 08/02	9613260680	**699236** MQ		**699736**	SD7V16
2.0 ie 16V	E	1997	EW10J4/L4	ES	10/98 ▸ 08/02	9626902180	**699199**		**699699**	SD7V16
2.0 ie, 2.0 ie 16V 2.0 ie Turbo	E	1998	RFU, RFV, RGX	ES	10/98 ▸ 08/02	9640486480	**699236** MQ		**699736**	SD7V16
1.9 TD	D	1905	XUD9TEF/K XUD9TEF/L3	ES	10/98 ▸ 08/02	9613260680	**699236** MQ		**699736**	SD7V16
2.0 JTD, 2.0 JTD 16V	D	1997	DW10ATED4, RHZ	ES	10/99 ▸ 08/02	9613260680	**699236** MQ		**699736**	SD7V16
2.1 TD	D	2088	P8C	ES	10/98 ▸ 08/02	9640486480	**699236** MQ		**699736**	SD7V16
ULYSSE (2002>)										
2.0 i 16V	E	1997	EW10J4/L4	ES	09/02 ▸	9626902180	**699199**		**699699**	SD7V16
UNO (89>95)										
60, Trend 9439466 ▸	E	1116	146A4, 146A6	ES	10/89 ▸ 12/92	7767200	**699075**		**699575**	V5
70, 70 SX, 70S	E	1372	146A7/C1/C2 160A1	ES	10/89 ▸ 12/93	7767200	**699075**		**699575**	V5
75S, 75SX	E	1498	149C1	ES	10/89 ▸ 12/93	7767200	**699075**		**699575**	V5
UNO MONDO (98>)										
1.4	E	1372	146C2.028	ES	01/98 ▸	7767200	**699075**		**699575**	V5
FIAT										
DOBLO (2000>)										
1.2 i	E	1242	223A5.000		10/00 ▸	46514443	**699280**			SC08C
1.6 i 16V, 1.6 GNV 16V	E	1596	182B6.000		10/01 ▸ 12/05	46809223	**699373**			5SL12C
1.9 DS, 1.9 JTD	D	1910	182B9.000 223A6.000		10/00 ▸	46786262	**699284**			SCS08C
DOBLO II (2006>)										
1.6 GNV 16V	E	1596	182B6.000		01/06 ▸	46809223	**699373**			5SL12C
1.9 MJTD 8V	D	1910	186A9.000 223B1.000		01/06 ▸	46786262	**699284**			SCS08C
DUCATO (94>2001)										
2.0, 2.0 i	E	1998	XU102CU/W2 XU10J2U/W2	ES	02/94 ▸ 12/01	9614674380		6453GE	**699520**	SD7H15
1.9 D, 1.9 TD	D	1905	XUD9A/K XUD9TEF/W3	ES	06/98 ▸ 12/01	9616821680	**699236** MQ		**699736**	SD7V16
FIORINO (2008>)										
1.4 i 75	E	1360	KFV	ES	12/07 ▸			9655191680	**813809**	SD6V12
1.4 i 75	E	1360	KFV	ES	12/07 ▸	9671456680	•**813317**	6453XK	**813817**	SD7V12
SCUDO (95>2003)										
2.0 i 16V	E	1997	EW10J4/L4	ES	09/00 ▸ 12/03	9626902180	**699199**		**699699**	SD7V16
1.9 D	D	1868	DW8/W3, DW8B/L4	ES	07/96 ▸ 12/03	9613260680	**699236** MQ		**699736**	SD7V16
1.9 D, 1.9 TD	D	1905	XUD9A/K XUD9TEF/K/L3/W3	ES	07/95 ▸ 12/03	9613260680	**699236** MQ		**699736**	SD7V16
2.0 JTD, 2.0 JTD 16V	D	1997	DW10ATED4, RHX RHZ	ES	02/00 ▸ 12/03	9613260680	**699236** MQ		**699736**	SD7V16

You must replace the receiver drier with the compressor
Vous devez remplacer la bouteille déshydratante avec le compresseur
Tauschen Sie den Trockner mit dem Kompressor
Es obligatorio cambiar el Filtro Deshidratante con el Compresor
Tem de substituir o filtro desidratante com o compressor
E' necessario cambiare il filtro disidratatore con il compressore
U moet de filterdroger samen met de compressor vervangen
Musisz wymienić filtr osuszacz przy wymianie sprę arki
Рекомендируем замену осушителя вместо с компрессором
Při výměně kompresoru je nutné vyměnit také vysoušeč
Nu uitați sa schimbați uscatorul cu compresorul
Kompresörle birlikte nem alıcıyı da değiştirin
Πρέπει να αντικαταστήσετε το φίλτρο υγρού μαζί με το συμπιεστή

		cc				OE NEW	Valeo NEW	OE ES	Valeo ES	
FIAT (.../...)										
SCUDO (2004>)										
2.0 16V	E	1997	EW10J4/L4	ES	01/04 ▸	9626902180	**699199**		**699699**	SD7V16
1.9 D	D	1868	DW8B/L4	ES	01/04 ▸	9640486480	**699236** ⊃MQ		**699736**	SD7V16
2.0 JTD, 2.0 JTD 16V	D	1997	DW10ATED4 DW10BTED/L4	ES	01/04 ▸	9640486480	**699236** ⊃MQ		**699736**	SD7V16
SCUDO (2007>)										
1.6 Mj 16V ▸11452	D	1560	DV6UTED4	ES	01/07 ▸ 03/08			9659232180	**813812**	SD7V16
2.0 Mj 16V	D	1997	DW10BTED4 DW10BTED4/F DW10UTED4	ES	01/07 ▸			9659749480	**813813**	SD7V16
STRADA PICK UP										
Trekking	E	1242	178B5.000		03/99 ▸ 03/03	46514443	**699280**			SC08C
Trekking	D	1910	223A6.000		12/00 ▸ 03/03	46786262	**699284**			SCS08C
STRADA PICK UP (2003>)										
1.2 i	E	1242	188A4.000		03/03 ▸	46514443	**699280**			SC08C
1.9 Ds, 1.9 JTD	D	1910	188A2.000 223A6.000		03/03 ▸	46786262	**699284**			SCS08C
FORD										
COUGAR										
2.0 i	E	1998	EDB		09/98 ▸ 05/99	4054456	**699209** ⊃MQ			FS10
2.0 i	E	1998	EDB	ES	05/99 ▸ 12/00	4034605			**699840**	FS10
2.5 i V6	E	2544	LCB	ES	09/98 ▸ 05/99	3933911	**699128** ⊃MQ		**699628**	FS10
ESCORT (90>94)										
1.3, 1.3 i	E	1299	J6A, JBD	ES	09/90 ▸ 08/93	6573814			**699671**	10PA15C
1.3, 1.3 i	E	1299	J6A, JBD	ES	08/93 ▸ 12/94	1058282			**813606**	FS10
1.4, 1.4 i	E	1392	F6F, F6G, FUH	ES	09/90 ▸ 08/93	6573814			**699671**	10PA15C
1.4, 1.4 i	E	1392	F6F, F6G, FUH	ES	08/93 ▸ 12/94	1058282			**813606**	FS10
1.6, 1.6 i	E	1597	LJE/F, LUJ, LUK	ES	09/90 ▸ 08/93	6573814			**699671**	10PA15C
1.6, 1.6 i	E	1597	LJE/F, LUJ, LUK	ES	08/93 ▸ 12/94	1058282			**813606**	FS10
1.8 i	E	1796	RDA, RQB	ES	08/93 ▸ 12/94	1058282			**813606**	FS10
2.0 i 16V	E	1998	N7A	ES	11/93 ▸ 12/94	1058282			**813606**	FS10
1.8 D, 1.8 TD	D	1753	RFD, RTE	ES	07/93 ▸ 12/94	1058283	**699119** ⊃MQ		**699619**	FS10
ESCORT (95>2001)										
1.4 i	E	1392	F4B	ES	01/95 ▸ 09/01	1058282			**813606**	FS10
1.6 i	E	1597	L1E, L1H, L1K	ES	01/95 ▸ 09/01	1058282			**813606**	FS10
1.8 i	E	1796	RDA, RKC, RQB	ES	01/95 ▸ 09/01	1058282			**813606**	FS10
2.0 i	E	1998	N7A	ES	08/95 ▸ 08/96	1058282			**813606**	FS10
1.8 D, 1.8 TD	D	1753	RFD, RFS, RTH, RV	ES	01/95 ▸ 09/01	1058283	**699119** ⊃MQ		**699619**	FS10
FIESTA (89>95)										
1.3 i	E	1299	J6B		02/94 ▸ 07/95	6926859	**699078**			TRV090
FIESTA (95>99)										
1.0 i	E	999	C4, TD	ES	05/96 ▸ 08/99	1047782	**699330** ⊃MQ		**699830**	FS10

• **New** Nouveau **Neu** Nuevo **Novo** Nuovo **Nieuw** Nowi **Новый** Novy **Nou** Yeni **Νέους**

⊃MQ : **Valeo Matching Quality** Valeo gleichwertige Qualität **Valeo Calidad Equivalente**
Część Valeo o Jakości Porównywalnej z Oryginałem

Use technical code cross-list for precise selection page 648
Utiliser les pages Cross-List (page 648) pour identifier la bonne référence
Verwenden Sie die Code-Vergleichsliste zur gezielten Suche des adäquaten Bauteils, Seite 648
Utilizar la lista de códigos cruzados para una selección precisa, página 648
Utilizzare la crosslist dei codici tecnici per una scelta precisa, pag. 648
Gebruik de lijst met verwijzingen naar de technische 648 voor de juiste keuze, op pagina 648
U yj listy kodów technicznych Valeo na stronie 648 dla precyzyjnego doboru
A se folosi paginile crosslist ca sa identifiati referita corecta
Χρησιμοποιήστε την λίστα αντιστοιχίων κωδικών για να κάνετε σωστή και ακριβή επιλογή, σελίδα 648

		cc				OE NEW	Valeo NEW	OE ES	Valeo ES	
FORD (.../...)										
FIESTA (95>99) (.../...)										
1.1 i	E	1118	G6A	ES	08/95 ▸ 09/96	1047782	**699330** MQ		**699830**	FS10
1.2 i 16V	E	1242	DHA	ES	08/95 ▸ 09/99	1047782	**699330** MQ		**699830**	FS10
1.3 i	E	1299	J4C, JJA	ES	08/95 ▸ 08/99	1047782	**699330** MQ		**699830**	FS10
1.3 i	E	1299	JAS, JBS	ES	10/95 ▸ 08/99	4029945			**699834**	FS10
1.4 i 16V	E	1388	FHA	ES	01/96 ▸ 08/99	1047782	**699330** MQ		**699830**	FS10
1.4 i 16V	E	1299	JAS, JBS	ES	01/96 ▸ 08/99	4029945			**699834**	FS10
FIESTA (99>2002)										
1.2 i 16V	E	1242	DHB, DHC, DHD	ES	08/99 ▸ 03/02	1034699	**699330** MQ		**699830**	FS10
1.3 i	E	1299	JAS, JBS	ES	08/99 ▸ 03/02	4029945			**699834**	FS10
1.4 i 16V	E	1388	FHA, FHE	ES	08/99 ▸ 03/02	1034699	**699330** MQ		**699830**	FS10
1.8 D, 1.8 TDdi	D	1753	DI-TD, RTJ	ES	03/00 ▸ 03/02	1346251	**699326** MQ		**699826**	TRV10
FIESTA (2002>)										
1.4 i 16V	E	1388	FXJA	ES	03/02 ▸	4338795	**699326** MQ		**699826**	TRV10
1.6 i 16V	E	1596	FYJA	ES	03/02 ▸	4338795	**699326** MQ		**699826**	TRV10
1.4 TDCi	D	1399	F6JA	ES	03/02 ▸	1321791			**813638**	SD6V12
1.6 TDCi 16V	D	1560	HHDA/B	ES	11/04 ▸ 09/05			1334194	•**813711**	
FIESTA (2005>)										
1.4 i 16V	E	1388	ASDA/B	ES	10/05 ▸	1346251	**699326** MQ		**699826**	TRV10
1.6 i 16V	E	1596	HWDA/B	ES	10/05 ▸	1346251	**699326** MQ		**699826**	TRV10
1.4 TDCi	D	1399	F6JC	ES	10/05 ▸	1321791			**813638**	SD6V12
1.6 TDCi 16V	D	1560	HHJA/B	ES	10/05 ▸ 11/08			1334194	•**813711**	
FOCUS (98>2001)										
1.4 i, 1.4 i 16V	E	1388	FXDA, FXDC	ES	03/00 ▸	1346251	**699326** MQ		**699826**	TRV10
1.6 i, 1.6 i 16V	E	1596	FYDA, FYDC	ES	03/00 ▸	1346251	**699326** MQ		**699826**	TRV10
1.8 i, 1.8 i 16V	E	1796	EYDA, EYDC	ES	03/00 ▸	1346251	**699326** MQ		**699826**	TRV10
2.0 i	E	1988	EDDA, EDDC	ES	03/00 ▸ 10/01	1066927	**699326** MQ		**699826**	TRV10
1.8 TDCi, 1.8 TDi	D	1753	C9D, C9DC, LD18TC	ES	03/00 ▸ 10/01	1066927	**699326** MQ		**699826**	TRV10
FOCUS (2001>2003)										
2.0 i 16V, 2.0 i Turbo 16V	E	1988	D20RS, EDDA, EDDC ZH20EST	ES	11/01 ▸	1346251	**699326** MQ		**699826**	TRV10
FOCUS (2004>)										
1.4 i 16V	E	1388	ZETEC-S 1.4 EFI	ES	09/04 ▸ 12/07			1678411	**813735**	VS16
1.6 i 16V	E	1596	HWDA/B, HXDA,	ES	09/04 ▸ 12/07			1678411	**813735**	VS16
1.8 i CNG 16V **1.8 i Flexifuel 16V**	F	1798	DURA18CNG,Q7DA	ES	11/04 ▸			1490495	**813733**	VS16

You must replace the receiver drier with the compressor
Vous devez remplacer la bouteille déshydratante avec le compresseur
Tauschen Sie den Trockner mit dem Kompressor
Es obligatorio cambiar el Filtro Deshidratante con el Compresor
Tem de substituir o filtro desidratante com o compressor
E' necessario cambiare il filtro disidratatore con il compressore
U moet de filterdroger samen met de compressor vervangen
Musisz wymienić filtr osuszacz przy wymianie sprę arki
Рекомендируем замену осушителя вместо с компрессором
Při výměně kompresoru je nutné vyměnit také vysoušeč
Nu uitați sa schimbați uscatorul cu compresorul
Kompresörle birlikte nem alıcıyı da değiştirin
Πρέπει να αντικαταστήσετε το φίλτρο υγρού μαζί με το συμπιεστή

		CC				OE NEW	Valeo NEW	OE ES	Valeo ES	
FORD (.../...)										
FOCUS (2004>) (.../...)										
2.0 i 16V	E	1999	2.0L DURATEC-HE	ES	11/04 ▸			1490495	**813733**	VS16
1.6 TDCi 16V	D	1560	D16FAP,HHDA/B	ES	09/06 ▸			1677171	**813734**	VS16
1.6 TDCi 16V	D	1560	D16FAP,HHDA/B	ES	09/04 ▸			1438877	**813736**	VS16
2.0 TDCi 16V	D	1997	D20TDCI D20TDCIFAP	ES	09/04 ▸ 10/06			1437620	**813737**	VS16
FOCUS (2007>)										
1.8 16V,1.8 Flexifuel 16V	F	1798	Q7DA	ES	12/07 ▸			1490495	**813733**	VS16
1.8 16V	E	1798	1.8 DURATEC-HE	ES	12/07 ▸ 01/10			1490495	**813733**	VS16
2.0 i CNG 145 16V 2.0 i LPG 145 16V	F	1999	2.0DC-HE BIFUEL	ES	06/08 ▸ 01/10			1490495	**813733**	VS16
2.0 16V	E	1999	2.0L DURATEC-HE	ES	12/07 ▸			1490495	**813733**	VS16
1.6 TDCi,1.6 TDCi 110 1.6 TDCi 90	D	1560	1.6 DQ TDCI,G8DA G8DB	ES	12/07 ▸			1677171	**813734**	VS16
FOCUS COUPÉ CABRIOLET										
1.6 i 16V	E	1596	HWDA/B	ES	07/06 ▸ 04/08			1678411	**813735**	VS16
2.0 i 16V	E	1999	2.0L DURATEC-HE	ES	07/06 ▸ 04/08			1490495	**813733**	VS16
2.0 TCDCi 16V	D	1997	D20TDCIFAP	ES	07/06 ▸			1437620	**813737**	VS16
FOCUS C-MAX (2003>2007)										
1.6 i 16V	E	1596	HWDA/B	ES	06/03 ▸ 02/07			1678411	**813735**	VS16
1.8 i 16V	E	1798	CSDA,DURA18	ES	06/03 ▸			1432770	**813733**	VS16
2.0 i 16V	E	1999	2.0L DURATEC-HE	ES	06/03 ▸ 02/07			1432770	**813733**	VS16
1.6 TDCi 16V	D	1560	D16FAP,HHDA/B	ES	06/03 ▸			1439594	**813736**	VS16
1.6 TDCi 16V	D	1560	D16FAP,HHDA/B	ES	10/03 ▸ 02/07			1677171	**813734**	VS16
2.0 TDCi 16V	D	1997	D20TDCI		10/03 ▸ 02/07	1234257	**813203**			SD7V16
2.0 TDCi 16V	D	1997	D20TDCI D20TDCIFAP	ES	12/05 ▸ 02/07			1437620	**813737**	VS16
FOCUS C-MAX (2007>)										
1.8 i 16V	F	1798	1.8 DURATEC-HE	ES	03/07 ▸ 08/10			1490495	**813733**	VS16
1.8 i 16V	E	1798	1.8 DURATEC-HE	ES	03/07 ▸ 08/10			1490495	**813733**	VS16
2.0 i 16V	E	1999	2.0L DURATEC-HE	ES	03/07 ▸ 08/10			1490495	**813733**	VS16
2.0 i CNG 16V,2.0 i GPL 16V	F	1999	2.0DC-HE BIFUEL	ES	03/07 ▸ 08/10			1490495	**813733**	VS16
1.6 TDCi 16V	D	1560	1.6 DQ TDCI,G8DB	ES	03/07 ▸			1465439	**813734**	VS16
FUSION (2002>2005)										
1.4 i 16V	E	1388	FXJA	ES	06/02 ▸ 09/05	4338795	**699326** ⊃MQ		**699826**	TRV10
1.6 i 16V	E	1596	FYJA	ES	06/02 ▸ 09/05	4338795	**699326** ⊃MQ		**699826**	TRV10
1.4 TDCi	D	1399	F6JA	ES	06/02 ▸	1321791			**813638**	SD6V12
1.6 TDCi 16V	D	1560	HHDA/B	ES	11/04 ▸ 09/05			1334194	•**813711**	
FUSION (2005>)										
1.2 i 16V	E	1242	DURAZET125	ES	10/05 ▸	1346251	**699326** ⊃MQ		**699826**	TRV10
1.4 i 16V	E	1388	ASDA/B	ES	10/05 ▸	1346251	**699326** ⊃MQ		**699826**	TRV10
1.6 i 16V	E	1596	HWDA/B	ES	10/05 ▸	1346251	**699326** ⊃MQ		**699826**	TRV10
1.4 TDCi	D	1399	F6JC	ES	10/05 ▸	1346251	**699326** ⊃MQ		**699826**	TRV10
1.6 TDCi 16V	D	1560	HHJA/B	ES	10/05 ▸			1334194	•**813711**	

• **New** Nouveau **Neu** Nuevo **Novo** Nuovo **Nieuw** Nowi **Новый** Novy **Nou** Yeni **Νέους**

⊃MQ : **Valeo Matching Quality** Valeo gleichwertige Qualität **Valeo Calidad Equivalente** Część Valeo o Jakości Porównywalnej z Oryginałem

Use technical code cross-list for precise selection page 648
Utiliser les pages Cross-List (page 648) pour identifier la bonne référence
Verwenden Sie die Code-Vergleichsliste zur gezielten Suche des adäquaten Bauteils, Seite 648
Utilizar la lista de códigos cruzados para una selección precisa, página 648
Utilizzare la crosslist dei codici tecnici per una scelta precisa, pag. 648
Gebruik de lijst met verwijzingen naar de technische 648 voor de juiste keuze, op pagina 648
U yj listy kodów technicznych Valeo na stronie 648 dla precyzyjnego doboru
A se folosi paginile crosslist ca sa identifiati referita corecta
Χρησιμοποιήστε την λίστα αντιστοιχίων κωδικών για να κάνετε σωστή και ακριβή επιλογή, σελίδα 648

		CC				OE NEW	Valeo NEW	OE ES	Valeo ES	
FORD (.../...)										
GALAXY (95>2000)										
2.0 i	E	1998	NSE	ES	05/95 ▸ 03/00	1026282	**699127** MQ		**699627**	FS10
2.3 i, 2.3 i 16V	E	2295	Y5	ES	01/97 ▸ 03/00	1026282	**699127** MQ		**699627**	FS10
1.9 TDi	D	1896	MF, MG	ES	11/95 ▸ 03/00	1067111	**813200** MQ		**813700**	SD7V16
1.9 TDi	D	1896	MG, MF	ES	11/95 ▸ 03/00	1067111	•**813400**		**813700**	DCS17
GALAXY (2000>2006)										
2.0 i	E	1998	NSE	ES	01/01 ▸	1026282	**699127** MQ		**699627**	FS10
2.0 i	E	1998	NSE	ES	08/02 ▸			1149431	**813627**	SD7V16
2.3 i	E	2295	Y5	ES	04/00 ▸ 08/01	1026282	**699127** MQ		**699627**	FS10
2.3 i	E	2295	Y5B	ES	08/02 ▸			1149431	**813627**	SD7V16
GALAXY (2006>2010)										
2.0 i 16V	E	1999	2.0L DURATEC-HE	ES	04/06 ▸ 03/10			1674615	**813739**	VS16
1.8 TDCi	D	1753	1.8 TC LYNX 1.8 TCD LYNX	ES	04/06 ▸ 04/10			1731790	**813738**	VS16
2.0 TDCi 16V	D	1997	2.0 DURATORQ 2.0TDCIDURATORQ	ES	04/06 ▸ 03/10			1441291	**813738**	VS16
GALAXY (2010>)										
2.0 i 145 16V	E	1999	2.0L DURATEC-HE	ES	03/10 ▸			1674615	**813739**	VS16
GRANADA (92>95)										
2.0 i	E	1998	N9B, N9D	ES	08/93 ▸ 01/95	3649380	**699120** MQ		**699620**	FS10
2.5 TDi	D	2500	SCB	ES	09/93 ▸ 01/95	3649380	**699120** MQ		**699620**	FS10
KA										
1.3 i	E	1299	JAS, JBS	ES	10/95 ▸ 03/02	4029945			**699834**	FS10
KUGA										
2.0 TDCi	D	1997	2.0 DURATORQ/F	ES	04/08 ▸ 03/10			1437620	**813737**	VS16
MONDEO (93>96)										
1.6 i	E	1597	L1F	ES	01/93 ▸ 08/95	1035433	**699047** MQ	1018265	**699547**	FS10
1.6 i	E	1597	L1F		08/95 ▸ 08/96	1035435	**699209** MQ			FS10
1.8 i	E	1796	RKA	ES	01/93 ▸ 08/96	1035433	**699047** MQ	1018265	**699547**	FS10
1.8 i	E	1796	RKA		08/95 ▸ 08/96	1035435	**699209** MQ			FS10
2.0 i	E	1998	NGA	ES	01/93 ▸ 08/96	1035433	**699047** MQ	1018265	**699547**	FS10
2.0 i	E	1998	NGA		08/95 ▸ 08/96	1035435	**699209** MQ			FS10
2.5 i V6 24V	E	2544	SEA	ES	07/94 ▸ 02/96	1018496	**699048** MQ		**699548**	FS10
2.5 i V6 24V	E	2544	SEA	ES	07/94 ▸ 08/96	1035431	**699128** MQ		**699628**	FS10
1.8 TD	D	1753	RFN	ES	09/93 ▸ 08/00	1035432	**699048** MQ	1018496	**699548**	FS10

You must replace the receiver drier with the compressor
Vous devez remplacer la bouteille déshydratante avec le compresseur
Tauschen Sie den Trockner mit dem Kompressor
Es obligatorio cambiar el Filtro Deshidratante con el Compresor
Tem de substituir o filtro desidratante com o compressor
E' necessario cambiare il filtro disidratatore con il compressore
U moet de filterdroger samen met de compressor vervangen

Musisz wymienić filtr osuszacz przy wymianie sprę arki
Рекомендируем замену осушителя вместо с компрессором
Při výměně kompresoru je nutné vyměnit také vysoušeč
Nu uitați sa schimbați uscatorul cu compresorul
Kompresörle birlikte nem alıcıyı da değiştirin
Πρέπει να αντικαταστήσετε το φίλτρο υγρού μαζί με το συμπεστή

		cc				OE NEW	Valeo NEW	OE ES	Valeo ES	
FORD (.../...)										
MONDEO (96>2000)										
1.6 i	E	1597	L1, L1J-90		08/96 ▸ 08/00	1035435	**699209** ⊃MQ			FS10
1.6 i	E	1597	L1, L1J-90	ES	05/99 ▸ 08/00	4034605			**699840**	FS10
1.8 i	E	1796	RKJ	ES	08/96 ▸ 05/99	1035433	**699047** ⊃MQ	1018265	**699547**	FS10
1.8 i	E	1796	RKJ		08/96 ▸ 08/00	1035435	**699209** ⊃MQ			FS10
1.8 i	E	1796	RKJ	ES	05/99 ▸ 08/00	4034605			**699840**	FS10
2.0 i	E	1998	NGA		08/96 ▸ 08/00	1035435	**699209** ⊃MQ			FS10
2.0 i	E	1998	NGA	ES	08/96 ▸ 05/99	1035433	**699047** ⊃MQ	1018265	**699547**	FS10
2.0 i	E	1998	NGA	ES	05/99 ▸ 08/00	4034605			**699840**	FS10
2.5 i V6	E	2544	SEA	ES	08/96 ▸ 08/00	1035431	**699128** ⊃MQ		**699628**	FS10
1.8 TD	D	1753	RFN	ES	09/93 ▸ 08/00	1035432	**699048** ⊃MQ	1018496	**699548**	FS10
MONDEO (2000>2003)										
1.8 i 16V	E	1798	CGBA/BB, CHBA/BB	ES	10/00 ▸	4586557	**699328**		**699828**	TRV10
2.0 i 16V	E	1999	CJBA, CJBB	ES	10/00 ▸	4586557	**699328**		**699828**	TRV10
2.5 Sfi	E	2495	LCBD	ES	10/00 ▸	1S7H19D629DD	**699336**		**699836**	SCROLL
3.0 V6 Efi	E	2967	MEBA	ES	05/02 ▸	1S7H19D629DD	**699336**		**699836**	SCROLL
2.0 DI 16V, 2.0 TDCi 16V 2.0 TDDI 16V	D	1998	D5BA, D6BA, PD	ES	10/00 ▸ 06/03	4054452	**699327** ⊃MQ		**699827**	FS10
MONDEO (2003>2005)										
1.8 SCi 16V	E	1798	ZH18	ES	06/03 ▸	4586557	**699328**		**699828**	TRV10
2.0 i 16V	E	1999	CJBB	ES	06/03 ▸	4586557	**699328**		**699828**	TRV10
2.0 DI 16V, 2.0 TDCi 16V 2.0 TDDI 16V	D	1998	D5BA, D6BA, PD	ES	06/03 ▸ 04/05	4749934	**699327** ⊃MQ		**699827**	FS10
2.2 TDCi 16V	D	2198	QJBA, QJBB	ES	09/04 ▸ 04/05	4749934	**699327** ⊃MQ		**699827**	FS10
MONDEO (2005>2007)										
1.8 i 16V	E	1798	DURA18	ES	05/05 ▸ 06/07	4586557	**699328**		**699828**	TRV10
2.0 i 16V	E	1999	DURA20	ES	05/05 ▸ 06/07	4586557	**699328**		**699828**	TRV10
2.0 TDCi 16V	D	1998	DURATQ20	ES	05/05 ▸ 06/07	4749934	**699327** ⊃MQ		**699827**	FS10
2.2 TDCi 16V	D	2198	QJBA, QJBB	ES	05/05 ▸ 06/07	4749934	**699327** ⊃MQ		**699827**	FS10
MONDEO (2007>)										
1.8 TDCi	D	1753	1.8 DQ-TDCI ECO 1.8 TC LYNX 1.8 TCD LYNX	ES	06/07 ▸			1441291	**813738**	VS16
2.0 TDCi,2.0 TDCi 115	D	1997	2.0 DURATORQ/F 2.0DQ DOHC DSL 2.0TDCIDURATORQ	ES	06/07 ▸			1674618	**813738**	VS16
2.0 145 16V,2.0 16V	E	1999	2.0L DURATEC-HE	ES	06/07 ▸			1674615	**813739**	VS16
2.0 16V	F	1999	2.0L DURATEC	ES	02/08 ▸ 09/10			1674615	**813739**	VS16
2.3 16V	E	2261	2.3 DURATEC HE	ES	09/07 ▸			1435790	**813739**	VS16
ORION (90>93)										
1.4, 1.4 i	E	1392	F6F, F6G, FUH	ES	09/90 ▸ 09/93	6573814			**699671**	10PA15C
1.6, 1.6 i	E	1597	LJE, LJF, LU, LUJ LUK	ES	09/90 ▸ 09/93	6573814			**699671**	10PA15C

• **New** Nouveau **Neu** Nuevo **Novo** Nuovo **Nieuw** Nowi **Новый** Nový **Nou** Yeni **Νέους**

⊃MQ : **Valeo Matching Quality** Valeo gleichwertige Qualität **Valeo Calidad Equivalente**
Część Valeo o Jakości Porównywalnej z Oryginałem

Use technical code cross-list for precise selection page 648
Utiliser les pages Cross-List (page 648) pour identifier la bonne référence
Verwenden Sie die Code-Vergleichsliste zur gezielten Suche des adäquaten Bauteils, Seite 648
Utilizar la lista de códigos cruzados para una selección precisa, página 648
Utilizzare la crosslist dei codici tecnici per una scelta precisa, pag. 648
Gebruik de lijst met verwijzingen naar de technische 648 voor de juiste keuze, op pagina 648
U yj listy kodów technicznych Valeo na stronie 648 dla precyzyjnego doboru
A se folosi paginile crosslist ca sa identifiati referita corecta
Χρησιμοποιήστε την λίστα αντιστοιχίων κωδικών για να κάνετε σωστή και ακριβή επιλογή, σελίδα 648

		cc				OE NEW	Valeo NEW	OE ES	Valeo ES	
FORD (.../...)										
ORION (90>93) (.../...)										
1.6 i	E	1597	L1E	ES	01/92 ▸ 09/93	1058282			**813606**	FS10
1.8 D	D	1753	RT	ES	09/90 ▸ 09/93	1027438	**699119** MQ		**699619**	FS10
PUMA										
1.4 i 16V	E	1388	FHD, FHF	ES	01/98 ▸ 10/00	1047782	**699330** MQ		**699830**	FS10
1.6 i 16V	E	1596	ZH16S	ES	09/00 ▸ 12/01	1047782	**699330** MQ		**699830**	FS10
1.7 i 16V	E	1679	MHA	ES	05/97 ▸ 12/01	1047782	**699330** MQ		**699830**	FS10
SCORPIO (92>94)										
2.0, 2.0 i	E	1998	N8B, N9B, N9D N9F	ES	08/93 ▸ 10/94	1028708	**699120** MQ		**699620**	FS10
2.5 TD	D	2499	SFA	ES	09/93 ▸ 09/94	3649380	**699120** MQ		**699620**	FS10
2.5 TD	D	2500	SCB	ES	09/93 ▸ 10/94	3649380	**699120** MQ		**699620**	FS10
SCORPIO (94>98)										
2.0 i, 2.0 i 16V	E	1998	N3A, NSD, NSE	ES	10/94 ▸	1028708	**699120** MQ		**699620**	FS10
2.3 i 16V	E	2295	Y5A	ES	05/96 ▸	1028708	**699120** MQ		**699620**	FS10
2.9 i	E	2933	BRF	ES	05/96 ▸ 08/96	3649380	**699120** MQ		**699620**	FS10
2.9 i 24V	E	2935	B0B	ES	05/96 ▸	3649380	**699120** MQ		**699620**	FS10
2.5 TD	D	2500	SCC, SCD	ES	10/94 ▸	3649380	**699120** MQ		**699620**	FS10
2.5 TD	D	2500	SCC, SCD		10/94 ▸	1028888	**699205**			FS10
S-MAX (2006>2010)										
2.0 i 16V	F	1999	2.0L DURATEC	ES	03/08 ▸ 06/10			1674615	**813739**	VS16
2.0 i 16V	E	1999	2.0L DURATEC-HE	ES	04/06 ▸ 06/10			1674615	**813739**	VS16
2.3 i Turbo 16V	E	2261	2.3 DURATEC HE	ES	03/07 ▸ 06/10			1674615	**813739**	VS16
2.5 i Turbo 20V	E	2521	2.5 DURATEC	ES	04/06 ▸ 06/10			1435790	**813739**	VS16
1.8 TDCi	D	1753	1.8 TC LYNX 1.8 TCD LYNX	ES	04/06 ▸ 06/10			1731790	**813738**	VS16
2.0 TDCi 16V	D	1997	2.0 DURATORQ 2.0TDCIDURATORQ	ES	04/06 ▸ 06/10			1441291	**813738**	VS16
2.0 TDCi 16V	D	1998	2.0DI DURATORQ	ES	04/06 ▸			1441291	**813738**	VS16
FORD										
COURRIER (91>96)										
1.3 i	E	1299	J6B		01/94 ▸ 09/96	6926859	**699078**			TRV090
TOURNEO CONNECT										
1.8 i 16V	E	1796	ZH18	ES	05/02 ▸	1346251	**699326** MQ		**699826**	TRV10
1.8 TDCi, 1.8 TDdi	D	1753	D18DI, D18TCI	ES	05/02 ▸	1346251	**699326** MQ		**699826**	TRV10
TRANSIT (2000>)										
2.3 i 16V	E	2295	E5FA	ES	01/00 ▸	4167448	**699127** MQ		**699627**	FS10

You must replace the receiver drier with the compressor
Vous devez remplacer la bouteille déshydratante avec le compresseur
Tauschen Sie den Trockner mit dem Kompressor
Es obligatorio cambiar el Filtro Deshidratante con el Compresor
Tem de substituir o filtro desidratante com o compressor
E' necessario cambiare il filtro disidratatore con il compressore
U moet de filterdroger samen met de compressor vervangen
Musisz wymienić filtr osuszacz przy wymianie sprę arki
Рекомендируем замену осушителя вместо с компрессором
Při výměně kompresoru je nutné vyměnit také vysoušeč
Nu untați sa schimbați uscatorul cu compresorul
Kompresörle birlikte nem alıcıyı da değiştirin
Πρέπει να αντικαταστήσετε το φίλτρο υγρού μαζί με το συμπιεστή

		cc				OE NEW	Valeo NEW	OE ES	Valeo ES	
FORD (.../...)										
TRANSIT (2000>) (.../...)										
2.0 TDci, 2.0 TDdi	D	1998	ABFA, D3FA-E3 F3FA, FIFA	ES	08/00 ▸	1308989	**699327** ⊃MQ		**699827**	FS10
2.0 TDdi	D	1998	20TDCI-125 20TDI-85, ABFA	ES	08/00 ▸	1346251	**699326** ⊃MQ		**699826**	TRV10
2.4 TDdi	D	2402	D2FA, D4FA, F4FA TBE	ES	01/00 ▸	4502836	**699337** ⊃MQ		**699837**	FS10
2.4 TDCi	D	2402	H9FA	ES	01/04 ▸	1308989	**699327** ⊃MQ		**699827**	FS10
TRANSIT (2006>)										
2.2 TDCi	D	2198	2.2 DURATORQ 2.2DURATORQTDCI P8FA,QVFA,QWFA QWFB	ES	04/06 ▸			1421334	**813740**	VS16
2.2 TDCi	D	2198	2.2 DURATORQ	ES	08/07 ▸			1444893	**813741**	VS16
2.4 TDCi 100,2.4 TDCi 115 2.4 TDCi 120,2.4 TDCi 140	D	2402	H9FC,HPFB,JXFA JXFB,PHFA,PHFB	ES	04/06 ▸			1444893	**813741**	VS16
TRANSIT CONNECT										
1.8 i 16V	E	1796	ZH18	ES	05/02 ▸	1346251	**699326** ⊃MQ		**699826**	TRV10
1.8 TDCi, 1.8 TDdi	D	1753	D18DI, D18TCI	ES	05/02 ▸	1346251	**699326** ⊃MQ		**699826**	TRV10
HONDA										
ACCORD IV (89>93)										
1.8	E	1849	F18A2		09/89 ▸ 01/93	38810PT0003	**699296**			10PA17C
2.0, 2.0 i 16V	E	1997	F20A2, F20A3 F20A4, F20A5 F20A8		09/89 ▸ 01/93	38810PT0013	**699296**			10PA17C
2.2 i 16V	E	2156	F22A3		09/89 ▸ 01/93	38810PT0003	**699296**			10PA17C
ACCORD V (93>95)										
2.0 i	E	1997	F20Z2		07/93 ▸ 06/95	38810PT0003	**699296**			10PA17C
2.3 i	E	2259	H23A3		07/93 ▸ 06/95	38810PT0003	**699296**			10PA17C
ACCORD VI (CE/CF) (95>98)										
2.0 TDi	D	1994	20T2N	ES	03/96 ▸ 08/98	38800P5TG20			**699720**	SD7V16
ACCORD VII (98>2003)										
2.0 i	E	1997	F20B6		09/98 ▸ 02/03	38810P3G003	**699325**			10PA17C
2.2 i	E	2157	H22A7		09/98 ▸ 02/03	38810P3G003	**699325**			10PA17C
ACCORD COUPE (91>97)										
2.0 i	E	1997	F20A7		07/91 ▸ 08/93	38810PT0003	**699296**			10PA17C
ACCORD COUPE (97>)										
2.0 i	E	1997	F20B5		06/98 ▸ 06/02	38810P3G003	**699325**			10PA17C
CIVIC V (EJ/EK) (95>2001)										
1.4 i	E	1396	D14A4		10/95 ▸ 03/01	38810PLC006	**813168**			TRS090
2.0 TDi	D	1994	20T2N12	ES	07/96 ▸ 03/01	38800P5TG20			**699720**	SD7V16
CIVIC (EP) (2001>)										
1.4 i	E	1396	D14A4, D14Z6		02/01 ▸ 09/05	38810PLC006	**813168**			TRS090

• **New** Nouveau **Neu** Nuevo **Novo** Nuovo **Nieuw** Nowi **Новый** Novy **Nou** Yeni **Νέους**

⊃MQ : **Valeo Matching Quality** Valeo gleichwertige Qualität **Valeo Calidad Equivalente** Część Valeo o Jakości Porównywalnej z Oryginałem

Use technical code cross-list for precise selection page 648
Utiliser les pages Cross-List (page 648) pour identifier la bonne référence
Verwenden Sie die Code-Vergleichsliste zur gezielten Suche des adäquaten Bauteils, Seite 648
Utilizar la lista de códigos cruzados para una selección precisa, página 648
Utilizzare la crosslist dei codici tecnici per una scelta precisa, pag. 648
Gebruik de lijst met verwijzingen naar de technische 648 voor de juiste keuze, op pagina 648
U yj listy kodów technicznych Valeo na stronie 648 dla precyzyjnego doboru
A se folosi paginile crosslist ca sa identifiati referita corecta
Χρησιμοποιήστε την λίστα αντιστοιχίων κωδικών για να κάνετε σωστή και ακριβή επιλογή, σελίδα 648

		cc				OE NEW	Valeo NEW	OE ES	Valeo ES	
HONDA (.../...)										
CIVIC (EP) (2001>) (.../...)										
1.4 iS	E	1396	D14Z6		02/01 ▸ 09/05	38810PLC006	**813168**			TRS090
1.6 i	E	1590	D16V1		02/01 ▸ 09/05	38810PLC006	**813168**			TRS090
ODYSSEY										
2.2 i 16V	E	2156	F22B8		07/97 ▸ 12/00	38810P3G003	**699325**			10PA17C
HYUNDAI										
ACCENT (94>99)										
1.3 i	E	1341	G4EH62		12/97 ▸ 09/99	9770129510	**813170**			HCC
1.5 i 12V	E	1495	G4EK-88		12/97 ▸ 09/99	9770129510	**813170**			HCC
ACCENT (99>2003)										
1.3 i	E	1341	G4EH44/55/62		10/99 ▸ 01/03	9770125000	**813169**			HCC
1.5 i, 1.5 i 16V	E	1495	G4EK-90, G4FK-102		10/99 ▸ 01/03	9770125000	**813169**			HCC
ELANTRA (2006>)										
1.6 i 16V	E	1591	1.6L-GAMMA		11/06 ▸ 07/08	977012H200	**•813359**			VS-14
2.0 i 16V	E	1975	2.0L-BETA		11/06 ▸ 07/08	977012H100	**•813366**			VS-14
1.6 CRDi 16V	D	1582	1.6L-U		11/06 ▸ 07/08	977012H200	**•813359**			VS-14
EXCEL (94>)										
1.3	E	1341	G4EH62		07/94 ▸ 09/99	9770122261	**813170**			HCC
GETZ (2002>2005)										
1.1 i 12V	E	1086	G4H46		09/02 ▸ 08/05	977011C100	**•813350**			
1.6 i 16V	E	1599	G4GR		09/02 ▸ 12/03	977011C250	**•813353**			HS-15
GETZ (2005>2006)										
1.1 i 12V	E	1086	1.1L-EPSILON		09/05 ▸ 12/06	977011C100	**•813350**			
1.4 i 16V	E	1399	G4EE		09/05 ▸ 12/06	977011C250	**•813353**			HS-15
1.6 i 16V	E	1599	GAGRE		09/05 ▸ 12/06	977011C250	**•813353**			HS-15
1.5 CRDi 16V	D	1493	D4F,D4FA-G		09/05 ▸ 12/06	977011C600	**•813358**			HS-15
GETZ (2006>)										
1.1 i 12V	E	1086	G4H46		11/06 ▸ 02/07	977011C100	**•813350**			
1.4 i 16V	E	1399	1.4L-ALPHA		11/06 ▸ 07/09	977011C250	**•813353**			HS-15
1.6 i 16V	E	1599	1.6L-ALPHA DOHC		11/06 ▸ 07/09	977011C250	**•813353**			HS-15
1.5 CRDi 16V	D	1493	1.5L-U		11/06 ▸ 07/10	977011C600	**•813358**			HS-15
GRANDEUR										
2.2 CRDi 16V	D	2188	D4-EB		06/06 ▸ 08/08	977013K720	**•813361**			VS-18
I10										
1.1 i 12V	E	1086	1.1L-EPSILON		12/07 ▸	977010X000	**•813379**			HS-11
1.2 16V	E	1248	1.2L-KAPPA		09/08 ▸	977010X100	**•813368**			HS-09
1.1 CRDi 12V	D	1120	1.1L-U		12/07 ▸	977010X200	**•813369**			HS-09
I30										
1.4 i 16V	E	1396	1.4L-GAMMA		03/07 ▸	977012H000	**•813356**			VS-14
1.6 CVVT 16V	E	1591	1.6L-GAMMA		12/07 ▸	977012H000	**•813356**			VS-14
2.0 CVVT 16V	E	1975	2.0L-BETA		12/07 ▸	977012H100	**•813366**			VS-14
1.6 CRDi 16V	D	1582	1.6L-U		03/07 ▸	977012H200	**•813359**			VS-14

You must replace the receiver drier with the compressor
Vous devez remplacer la bouteille déshydratante avec le compresseur
Tauschen Sie den Trockner mit dem Kompressor
Es obligatorio cambiar el Filtro Deshidratante con el Compresor
Tem de substituir o filtro desidratante com o compressor
E' necessario cambiare il filtro disidratatore con il compressore
U moet de filterdroger samen met de compressor vervangen
Musisz wymienić filtr osuszacz przy wymianie sprę arki
Рекомендируем замену осушителя вместо с компрессором
Při výměně kompresoru je nutné vyměnit také vysoušeč
Nu untați sa schimbați uscatorul cu compresorul
Kompresörle birlikte nem alıcıyı da değiştirin
Πρέπει να αντικαταστήσετε το φίλτρο υγρού μαζί με το συμπιεστή

		cc				OE NEW	Valeo NEW	OE ES	Valeo ES	
HYUNDAI (.../...)										
IX55										
3.0 CRDi	D	2959	3.0L-S		09/08 ▸	977013J010	•**813364**			VS-18
LANTRA (95>)										
1.5 i 12V	E	1495	G4EK-88		09/96 ▸ 07/00	9770122261	**813170**			HCC
PONY (94>)										
1.3 i	E	1341	G4EH62		12/97 ▸	9770129510	**813170**			HCC
1.5 i 12V	E	1495	G4EK-88		12/97 ▸	9770129510	**813170**			HCC
SANTA FÉ (2006>)										
2.7 i V6 24V	E	2656	G8-EA		03/06 ▸ 09/09	977012B151	•**813377**			VS-18
2.2 CRDi 16V	D	2188	D4-EB		03/06 ▸ 09/09	977012B151	•**813377**			VS-18
HYUNDAI										
SOLARIS (RUS)										
1.4 i	E				06/10 ▸	977014L000	•**813374**			
1.6 i	E				06/10 ▸	977014L000	•**813374**			
HYUNDAI										
SONATA (2005>)										
2.0 CRDi 16V	D	1991	D4-EA		03/05 ▸ 12/07	977013K720	•**813361**			VS-18
TUCSON (2004>)										
2.0 i 16V	E	1975	G4GCG		07/04 ▸ 12/06	977012E000	•**813357**			HS-15
JEEP										
CHEROKEE (77>2001)										
4.0 i	E	3964	ERH-184		01/99 ▸ 10/99	55037360	**699310**			SD7H15
GRAND CHEROKEE (99>)										
4.0 i	E	3964	ERH		01/99 ▸	55037205AG	**699310**			SD7H15
KIA										
CEED										
1.4 CVVT 16V	E	1397	D4FAE		08/06 ▸	977012H000	•**813356**			VS-14
1.6 CVVT 16V	E	1591	G4FC		08/06 ▸	977012H000	•**813356**			VS-14
2.0 CVVT 16V	E	1975	G4GC		08/06 ▸	977012H100	•**813366**			VS-14
1.6 CRDi VGT 16V	D	1582	D4FB,D4FB-L		08/06 ▸ 11/09	977012H000	•**813356**			VS-14
1.6 CRDi VGT 16V	D	1582	D4FB,D4FB-L		08/06 ▸	977012H200	•**813359**			VS-14
2.0 CRDi VGT 16V	D	1991	D4EA		08/06 ▸ 11/09	977012H100	•**813366**			VS-14
CERATO										
1.6 i 16V	E	1599	G4ED		01/04 ▸ 12/08	977012F000	•**813360**			10PA15C
1.5 CRDi 16V	D	1493	D4FA		04/05 ▸ 12/08	977012F500	•**813362**			10PA15C
2.0 CRDi 16V	D	1991	D4EA		01/04 ▸ 12/08	977012F000	•**813360**			10PA15C
MAGENTIS II										
2.0 i 16V	E	1998	G4KA		01/06 ▸ 05/08	977013K720	•**813361**			VS-18
2.0 CRDi 16V	D	1991	D4EA		01/06 ▸ 05/08	977013K720	•**813361**			VS-18

• **New** Nouveau **Neu** Nuevo **Novo** Nuovo **Nieuw** Nowi **Новый** Novy **Nou** Yeni **Νέους**

Valeo Matching Quality Valeo gleichwertige Qualität **Valeo Calidad Equivalente**
Część Valeo o Jakości Porównywalnej z Oryginałem

Use technical code cross-list for precise selection page 648
Utiliser les pages Cross-List (page 648) pour identifier la bonne référence
Verwenden Sie die Code-Vergleichsliste zur gezielten Suche des adäquaten Bauteils, Seite 648
Utilizar la lista de códigos cruzados para una selección precisa, página 648
Utilizzare la crosslist dei codici tecnici per una scelta precisa, pag. 648
Gebruik de lijst met verwijzingen naar de technische 648 voor de juiste keuze, op pagina 648
U yj listy kodów technicznych Valeo na stronie 648 dla precyzyjnego doboru
A se folosi paginile crosslist ca sa identifiati referita corecta
Χρησιμοποιήστε την λίστα αντιστοιχίων κωδικών για να κάνετε σωστή και ακριβή επιλογή, σελίδα 648

		CC				OE NEW	Valeo NEW	OE ES	Valeo ES	
KIA (.../...)										
PICANTO (2004>2007)										
1.0	E	999	G4HF		01/04 ▸ 12/07	9770107100	•**813375**			HS-11
1.1	E	1086	G4HG		01/04 ▸ 12/07	9770107100	•**813375**			HS-11
1.1 CRDi	D	1120	D3FA		11/05 ▸ 12/06	9770107200	•**813367**			HS-11
PICANTO (2006>2007)										
1.0 i 61 12V	E	999	1.0L-EPSILON		09/06 ▸ 12/06	9770107100	•**813375**			HS-11
1.1 i 65 12V	E	1086	1.1L-EPSILON		09/06 ▸ 12/06	9770107100	•**813375**			HS-11
1.1 CRDI 75 12V	D	1120	1.1L-U		09/06 ▸ 12/06	9770107100	•**813375**			HS-11
PICANTO (2007>)										
1.0 i 61 12V	E	999	1.0L-EPSILON		12/07 ▸ 12/08	9770107200	•**813367**			HS-11
1.1 i 65 12V	E	1086	1.1L-EPSILON		12/07 ▸ 12/08	9770107200	•**813367**			HS-11
1.1 CRDi 75 12V	D	1120	1.1L-U		12/07 ▸ 12/08	9770107200	•**813367**			HS-11
SORENTO										
2.5 CRDi 16V	D	2497	D4CB		02/03 ▸ 08/09	977013E050	•**813370**			10PA17C
2.5 CRDi	D	2497	D4CB		12/06 ▸	977013E350	•**813371**			HS-18
SOUL (2008>)										
1.6 CRDi 16V	D	1582	1.6L-U2		12/08 ▸ 07/11	977012K201	•**813372**			VS-12
SPORTAGE										
2.7 i V6 24V	E	2656	G6BA		12/04 ▸ 12/06	977012E000	•**813357**			HS-15
VENGA (2009>)										
1.4 CRDi 90 16V	D	1396	1.4L-U2		12/09 ▸	977012K201	•**813372**			VS-12
1.6 CRDi 128 16V	D	1582	1.6L-U2		12/09 ▸	977012K201	•**813372**			VS-12
LANCIA										
DEDRA (89>94)										
1.6 ie	E	1581	835A1.046 835A1/C1.000	ES	03/89 ▸ 06/94	7576000			**699568**	V5
1.6 ie	E	1581	835C1.000		10/92 ▸ 06/94	7773398	**699076**			V5
1.8 ie	E	1756	835A2/C5		03/89 ▸ 06/94	7746258	**699147**			SD7H15
2.0 ie, 2.0 ie Turbo	E	1995	835A5/A7/A8.000 835A5/A7/A8.046		03/89 ▸ 06/94	7746258	**699147**			SD7H15
1.9 TDs	D	1929	160D1.000 835A4.000	ES	03/89 ▸ 06/94	7767200	**699075**		**699575**	V5
DEDRA (94>99)										
1.6 ie	E	1581	159B9.000		07/94 ▸ 11/97	7773398	**699076**			V5
1.6 ie, 1.6 ie 16V	E	1581	182A4.000		12/97 ▸ 09/99	46438576	**699289**			TV12SC
1.8 ie ▸ 4088460	E	1756	836A5.000		07/94 ▸ 05/95	7746258	**699147**			SD7H15
1.8 ie 4088460 ▸	E	1756	836A5.000	ES	05/95 ▸ 09/99	46405414			**813628**	SD7V16
2.0 ie, 2.0 ie 16V ▸ 4078692	E	1995	835A5.046 836A3.000		07/94 ▸ 05/95	7746258	**699147**			SD7H15
2.0 ie, 2.0 ie 16V 4078692 ▸	E	1995	835A5.046 836A3.000	ES	05/95 ▸ 09/99	46405414			**813628**	SD7V16
1.9 Tds	D	1929	160D1.000 835A4.000	ES	07/94 ▸ 09/99	7767200	**699075**		**699575**	V5
DELTA (93>99)										
1.4 ie	E	1372	160A1.046 836A4.000		03/93 ▸ 08/99	7773398	**699076**			V5

You must replace the receiver drier with the compressor
Vous devez remplacer la bouteille déshydratante avec le compresseur
Tauschen Sie den Trockner mit dem Kompressor
Es obligatorio cambiar el Filtro Deshidratante con el Compresor
Tem de substituir o filtro desidratante com o compressor
E' necessario cambiare il filtro disidratatore con il compressore
U moet de filterdroger samen met de compressor vervangen
Musisz wymienić filtr osuszacz przy wymianie sprę arki
Рекомендируем замену осушителя вместо с компрессором
Při výměně kompresoru je nutné vyměnit také vysoušeč
Nu untați sa schimbați uscatorul cu compresorul
Kompresörle birlikte nem alıcıyı da değiştirin
Πρέπει να αντικαταστήσετε το φίλτρο υγρού μαζί με το συμπιεστή

		cc				OE NEW	Valeo NEW	OE ES	Valeo ES	

LANCIA (.../...)

DELTA (93>99) (.../...)

1.6 ie	E	1581	835C1.000		03/93 ▸ 08/99	7773398	**699076**			V5
1.6 ie, 1.6 ie 16V	E	1581	182A4.000 182A6.000		07/95 ▸ 08/99	46438576	**699289**			TV12SC
1.8 ie 16V	E	1747	183A1.000		05/96 ▸ 08/99	7746258	**699147**			SD7H15
1.8 ie 16V 0063308 ▸	E	1747	183A1.000	ES	05/95 ▸ 08/99	46405414			**813628**	SD7V16
1.8 ie	E	1756	835C2/C4.000 836A5/A6.000		03/93 ▸ 08/99	7746258	**699147**			SD7H15
1.8 ie	E	1756	835C2/C4.000 836A5/A6.000	ES	05/95 ▸ 08/99	46405414			**813628**	SD7V16
2.0 i 16V, 2.0 i Turbo 16V	E	1995	175A4.000 836A2/A3.000		03/93 ▸ 08/99	7746258	**699147**			SD7H15
2.0 i 16V, 2.0 i Turbo 16V	E	1995	175A4.000 836A2/A3.000	ES	04/95 ▸ 08/99	46405414			**813628**	SD7V16
1.9 TD	D	1929	160D1.000 835A4.000	ES	06/94 ▸ 08/99	7767200	**699075**		**699575**	V5

KAPPA

3.0 ie V6 24V	E	2959	838B.000	ES	05/96 ▸ 10/01	60607289	**699174**		**699674**	SD7V16

LYBRA

1.6 i 16V	E	1581	182A4.000		09/99 ▸	46525369	**699391**			V5
1.6 i 16V	E	1596	182B6.000		09/99 ▸	46525369	**699391**			V5
2.0 i 20V	E	1998	182B7.000 185A8.000		09/99 ▸	46514137	**699281**			TV12SC

MUSA

1.4 i 16V	E	1368	192B2.000 843A1.000		07/04 ▸	46782669	**813171**			SCSB06C

PHEDRA

2.0 i 16V	E	1997	EW10J4/L4	ES	09/02 ▸	9626902180	**699199**		**699699**	SD7V16

THEMA

2.0 i, 2.0 i 16V **2.0 i Turbo 16V, 2000 ie** **2000 ie 16V, 2000 ie Turbo** **2000 ie Turbo 16V**	E	1995	834B/C/C1 834B1/C1/F1.000 834B2.246 834B2/F2.000	ES	10/84 ▸ 11/94	7774059			**699598**	SD709
2.5 TDs	D	2500	8144-97Y 8144-97YC		09/92 ▸ 11/94	98453640	**699101**			SD7H15
2500 TD	D	2500	8144-97, 8144-97S	ES	10/88 ▸ 08/92	4846601			**699599**	SD709

THESIS

3.0 i V6 24V	E	2959	841A.000	ES	09/02 ▸	60607289	**699174**		**699674**	SD7V16

Y (95>2000)

1.1 i	E	1108	176B2.000		04/97 ▸ 08/00	46514443	**699280**			SC08C
1.2 i, 1.2 i 16V	E	1242	176B9.000 840A3.000		11/95 ▸ 08/00	7765865	**699286**			TV12EC
1.4 i	E	1370	840A2/A4.000		11/95 ▸ 08/00	46438366	**699290**			TV12SC

Y (2000>2003)

1.2 i, 1.2 i 16V	E	1242	188A4/A5.000		09/00 ▸ 09/03	46782669	**813171**			SCSB06C

YPSILON (2003>)

1.2 i, 1.2 i 16V	E	1242	188A4/A5.000		10/03 ▸	46782669	**813171**			SCSB06C

• **New** Nouveau **Neu** Nuevo **Novo** Nuovo **Nieuw** Nowi **Новый** Novy **Nou** Yeni **Νέους**

VMQ : **Valeo Matching Quality** Valeo gleichwertige Qualität **Valeo Calidad Equivalente**
Część Valeo o Jakości Porównywalnej z Oryginałem

Use technical code cross-list for precise selection page 648
Utiliser les pages Cross-List (page 648) pour identifier la bonne référence
Verwenden Sie die Code-Vergleichsliste zur gezielten Suche des adäquaten Bauteils, Seite 648
Utilizar la lista de códigos cruzados para una selección precisa, página 648
Utilizzare la crosslist dei codici tecnici per una scelta precisa, pag. 648
Gebruik de lijst met verwijzingen naar de technische 648 voor de juiste keuze, op pagina 648
U yj listy kodów technicznych Valeo na stronie 648 dla precyzyjnego doboru
A se folosi paginile crosslist ca sa identifiati referita corecta
Χρησιμοποιήστε την λίστα αντιστοιχίων κωδικών για να κάνετε σωστή και ακριβή επιλογή, σελίδα 648

		CC				OE NEW	Valeo NEW	OE ES	Valeo ES	
LANCIA (.../...)										
YPSILON (2003>) (.../...)										
1.4 i 16V	E	1368	843A1.000		10/03 ▸	46782669	**813171**			SCSB06C
ZETA										
2.0 ie 16V, 2.0 ie Turbo	E	1998	RFV, RGX	ES	10/94 ▸ 12/00	9613260680	**699236** ⊃MQ		**699736**	SD7V16
2.0 ie 16V	E	1997	EW10J4/L4	ES	01/01 ▸ 08/02	9626902180	**699199**		**699699**	SD7V16
2.0 JTD	D	1997	DW10ATED/L4	ES	01/00 ▸ 08/02	9613260680	**699236** ⊃MQ		**699736**	SD7V16
2.1 TD	D	2088	P8C	ES	03/96 ▸ 12/00	9613260680	**699236** ⊃MQ		**699736**	SD7V16
LAND ROVER										
DISCOVERY (89>94)										
3.5 V8	E	3528	27G	ES	11/89 ▸ 08/93	ETC7994			**699635**	SD709
3.5 i V8	E	3532	22D, 24D	ES	09/89 ▸ 08/93	ETC7994			**699635**	SD709
DISCOVERY (94>98)										
3.9 i V8	E	3947	36D	ES	03/94 ▸ 07/97	ETC7994			**699635**	SD709
3.9 i V8	E	3950	35D-182	ES	07/97 ▸ 11/98	ETC7994			**699635**	SD709
FREELANDER										
2.5 i V6 ▸ 1A999999	E	2497	25K6	ES	03/00 ▸	JPB101154L		JPB000040A	•**813832**	7SB16C
2.0 Td4	D	1951	M47-112		09/00 ▸ 09/03	JPB101460	**699347**			PXV16
2.0 Td4	D	1951	M47-112		09/03 ▸	JPB500120	**699347**			PXV16
RANGE ROVER (94>2002)										
2.5 TD	D	2497	25/6TM	ES	09/94 ▸ 02/02	ERR4375	**699148** ⊃MQ		**699648**	10PA17C
MAN										
F2000										
19.463, 19.464	D	12816	D 2876 LF 02/06		01/94 ▸	5177970-7014	**813022**			SD7H15
23.463, 24.463, 26.463 27.463, 33.463	D	12816	D 2876 LF 02		01/94 ▸	5177970-7011	**813022**			SD7H15
32.463, 35.463, 41.463	D	12816	D 2876 LF 02		08/95 ▸	5177970-7014	**813022**			SD7H15
L2000										
8.145, 9.145, 9.185	D	4580	D 0834 LFL 02/03		09/00 ▸	5177970-7011	**813022**			SD7H15
10.145, 10.185, 12.185	D	4580	D 0834 LFL 02/03		09/00 ▸	5177970-7011	**813022**			SD7H15
8.185, 8.220, 8.223, 8.224	D	6871	D 0836 LFL 02		01/95 ▸	5177970-7014	**813022**			SD7H15
9.223, 9.224, 9.225	D	6871	D 0826 LFL 02/03/06		01/95 ▸	5177970-7014	**813022**			SD7H15
10.220, 10.223, 10.224 10.225	D	6871	D 0826 LFL 03		01/95 ▸	5177970-7011	**813022**			SD7H15
M2000										
12.224, 12.225, 12.255	D	6871	D 0826 LFL 02/03/09/10		08/95 ▸	5177970-7014	**813022**			SD7H15
15.224, 15.225, 15.255 15.265, 15.285	D	6871	D 0826 LFL 02/03/05/09/10		08/95 ▸	5177970-7011	**813022**			SD7H15
18.224, 18.255, 18.285	D	6871	D 0826 LFL 03/05/10		09/99 ▸	5177970-7011	**813022**			SD7H15
TGA										
18.310, 18.350, 18.360 18.390, 18.430	D	10518	D 2066 LF03/04/13 LF33/35		05/04 ▸	8161906-6012	**813014**			SD7H15

You must replace the receiver drier with the compressor
Vous devez remplacer la bouteille déshydratante avec le compresseur
Tauschen Sie den Trockner mit dem Kompressor
Es obligatorio cambiar el Filtro Deshidratante con el Compresor
Tem de substituir o filtro desidratante com o compressor
E' necessario cambiare il filtro disidratatore con il compressore
U moet de filterdroger samen met de compressor vervangen

Musisz wymienić filtr osuszacz przy wymianie sprę arki
Рекомендируем замену осушителя вместо с компрессором
Při výměně kompresoru je nutné vyměnit také vysoušeč
Nu uitați sa schimbați uscatorul cu compresorul
Kompresörle birlikte nem alıcıyı da değiştirin
Πρέπει να αντικαταστήσετε το φίλτρο υγρού μαζί με το συμπιεστή

		cc				OE NEW	Valeo NEW	OE ES	Valeo ES	
MAN (.../...)										
TGA (.../...)										
18.310, 18.360, 18.410	D	11967	D 2868 LF26/27/28		09/02 ▸	5177970-7014	**813022**			SD7H15
18.460, 18.510, 18.480 18.530	D	12816	D 2876 LF04/05 LF07/12/13		04/00 ▸	5177970-7011	**813022**			SD7H15
24.350, 24.360, 24.390 24.400, 24.430	D	10518	D 2066 LF02/03 LF12/13/32		05/04 ▸	8161906-6012	**813014**			SD7H15
24.360, 24.410	D	11967	D 2866 LF27/28		09/01 ▸	5177970-7014	**813022**			SD7H15
24.460, 24.480, 24.510 24.530	D	12816	D 2876 LF04/05 LF12/13		09/01 ▸	5177970-7014	**813022**			SD7H15
26.310, 26.350, 26.360 26.390, 26.400	D	10518	D 2066 LF03/04 LF13/33/35		05/04 ▸	8161906-6012	**813014**			SD7H15
26.310, 26.360, 26.410	D	11967	D 2866 LF26/27/28		01/01 ▸	5177970-7014	**813022**			SD7H15
26.460, 26.480, 26.510 26.530	D	12816	D 2876 LF05/12/13		01/01 ▸	5177970-7014	**813022**			SD7H15
28.310, 28.360, 28.410	D	11967	D 2866 LF26/27/28		09/02 ▸	5177970-7014	**813022**			SD7H15
28.460, 28.480, 28.510 28.530	D	12816	D 2876 LF04/05/12/13		09/02 ▸	5177970-7014	**813022**			SD7H15
32.390, 32.400, 32.430 32.440	D	10518	D 2066 LF02/03 LF12/13/32		05/04 ▸	8161906-6012	**813014**			SD7H15
32.310, 32.360, 32.410	D	11967	D 2866 LF26/27/28		01/02 ▸	5177970-7014	**813022**			SD7H15
32.460, 32.480	D	12816	D 2876 LF04/12		01/02 ▸	5177970-7014	**813022**			SD7H15
33.350, 33.360, 33.390 33.400, 33.430	D	10518	D 2066 LF02/03 LF12/13/32		05/04 ▸	8161906-6012	**813014**			SD7H15
33.360, 32.410	D	11967	D 2866 LF27/28/32		10/00 ▸	5177970-7014	**813022**			SD7H15
33.460, 33.480, 33.510 33.530	D	12816	D 2876 LF04/05/07 LF12/13		09/02 ▸	5177970-7014	**813022**			SD7H15
35.310, 35.320, 35.350 35.360, 35.390, 35.400	D	10518	D 2066 LF03/04/13 LF33/35		02/04 ▸	8161906-6012	**813014**			SD7H15
35.360, 35.410	D	11967	D 2866 LF27/28/32		09/02 ▸	5177970-7014	**813022**			SD7H15
37.310, 37.320, 37.350 37.360, 37.390, 37.400	D	10518	D 2066 LF03/04/13 LF33/35		12/04 ▸	8161906-6012	**813014**			SD7H15
41.350, 41.360, 41.390 41.400, 41.430	D	10518	D 2066 LF03/04/13 LF33/35		12/04 ▸	8161906-6012	**813014**			SD7H15
41.360, 41.410	D	11967	D 2866 LF27/28/32		01/03 ▸	5177970-7014	**813022**			SD7H15
MAZDA										
121 (JA/JB) (96>)										
1.2	E	1242	DHA	ES	03/96 ▸	1E0561450A	**699330** ⊃MQ		**699830**	FS10
CX-7										
2.3 i Turbo 16V	E	2261	MZR-DISI TURBO		05/07 ▸ 06/08	GJ6A61K00D	**813175**			PANASO
MAZDA 3										
2.3 i Turbo 16V	E	2261	MZR-DISI TURBO		07/06 ▸ 07/09	GJ6A61K00D	**813175**			PANASO
MAZDA 6										
1.8 i 16V	E	1798	MZR18		02/02 ▸	GJ6A61K00C	**813175**			PANASO
2.0 i 16V	E	1999	MZR20		02/02 ▸	GJ6A61K00C	**813175**			PANASO
2.3 i 16V	E	2261	L3		02/02 ▸	GJ6A61K00C	**813175**			PANASO
2.0 DiTD 16V	D	1998	MZR-CD20		04/05 ▸	GJ6A61K00C	**813175**			PANASO
MERCEDES										
190 (201)										
2.0, 2.0 i	E	1997	102.924/962	ES	12/82 ▸ 08/93	0031319501			**699552**	10P15C
2.3 i	E	2299	102.983/5	ES	07/86 ▸ 08/93	0031319501			**699552**	10P15C
2.6 i	E	2599	103.942-160	ES	01/87 ▸ 08/93	0031319501			**699552**	10P15C

• **New** Nouveau **Neu** Nuevo **Novo** Nuovo **Nieuw** Nowi **Новый** Novy **Nou** Yeni **Νέους**

⊃MQ : **Valeo Matching Quality** Valeo gleichwertige Qualität **Valeo Calidad Equivalente**
Część Valeo o Jakości Porównywalnej z Oryginałem

Use technical code cross-list for precise selection page 648
Utiliser les pages Cross-List (page 648) pour identifier la bonne référence
Verwenden Sie die Code-Vergleichsliste zur gezielten Suche des adäquaten Bauteils, Seite 648
Utilizar la lista de códigos cruzados para una selección precisa, página 648
Utilizzare la crosslist dei codici tecnici per una scelta precisa, pag. 648
Gebruik de lijst met verwijzingen naar de technische 648 voor de juiste keuze, op pagina 648
U yj listy kodów technicznych Valeo na stronie 648 dla precyzyjnego doboru
A se folosi paginile crosslist ca sa identifiati referita corecta
Χρησιμοποιήστε την λίστα αντιστοιχίων κωδικών για να κάνετε σωστή και ακριβή επιλογή, σελίδα 648

		CC				OE NEW	Valeo NEW	OE ES	Valeo ES	
MERCEDES (.../...)										
190 (201) (.../...)										
2.5 D Turbo	D	2497	602.961	ES	07/86 ▸ 08/93	0031319501			**699552**	10P15C
200/300 (124)										
200T, 200TE i	E	1997	102922, 102963	ES	03/86 ▸ 09/92	0031319501			**699552**	10P15C
200 CE i, 200E i, 200TE i	E	1998	111.940	ES	10/92 ▸ 06/93	0002300611	**699105**		**699605**	10PA17C
220 CE i, 220E i, 220TE i	E	2199	111.960	ES	10/92 ▸ 06/93	0002300611	**699105**		**699605**	10PA17C
230TE i	E	2299	102.982	ES	03/86 ▸ 09/92	0031319501			**699552**	10P15C
260E i	E	2599	103,94, 103943	ES	01/85 ▸ 09/92	0031319501			**699552**	10P15C
280E i, 280EL i, 280TE i	E	2799	104.942	ES	10/92 ▸ 06/93	0002300511			**699604**	10PA17C
300 CE i, 300E i, 300TE i	E	2962	103.980/3/5	ES	03/85 ▸ 06/93	0031319501			**699552**	10P15C
300 CE i, 300E i, 300TE i	E	2962	104.980	ES	07/89 ▸ 06/93	0002300511			**699604**	10PA17C
320 CE i, 320E i, 320TE i	E	3199	104.992	ES	10/92 ▸ 06/93	0002300511			**699604**	10PA17C
400E i	E	4196	119.975	ES	10/92 ▸ 06/93	0001301115			**699688**	10PA15C
500E i	E	4973	119.974	ES	06/90 ▸ 06/93	0001301115			**699688**	10PA15C
250D, 250DL, 250TD	D	2497	602912, 602962	ES	12/84 ▸ 06/93	0031319501			**699552**	10P15C
A CLASS (168) (97>2003)										
A140 i	E	1397	166.940	ES	05/97 ▸	0002309411	**699300**		•**699800**	6SEU12C
A160 i	E	1598	166.960	ES	05/97 ▸	0002305911	**699300**		•**699800**	6SEU12C
A190 i	E	1898	166.990	ES	04/99 ▸	0002309411	**699300**		•**699800**	6SEU12C
A210 i	E	2084	166.995	ES	01/02 ▸	0002307911	**699300**		•**699800**	6SEU12C
A160CDI, A170CDI	D	1689	668.940/1/2	ES	05/98 ▸	0002305911	**699300**		•**699800**	6SEU12C
A CLASS (169) (2004>2008)										
A160CDI, A180CDI, A200CDI	D	1991	640941, 640942 640,94		07/04 ▸	0012303611	**813196**			6SEU16C
B CLASS (2005>2008)										
B150 i	E	1498	266.920		05/05 ▸	0012303611	**813196**			6SEU16C
B170 i	E	1699	266.940		05/05 ▸	0012303611	**813196**			6SEU16C
B200 i	E	2034	266,96, 266,98		05/05 ▸	0012303611	**813196**			6SEU16C
B180 CDI, B200 CDI	D	1991	640941, 640,94		05/05 ▸	0012303611	**813196**			6SEU16C
C CLASS (202)										
C180 i	E	1799	111,92, 111921		03/93 ▸ 02/01	0002301311	**699299**			6CA17C
C180 i A344660 ▸	E	1799	111,92, 111921	ES	03/93 ▸ 02/01	0002307011	**699298** MQ		**699798**	7SBU16C
C180 i, C200 i, C200K i	E	1998	111945, 111.952/6		01/94 ▸ 02/01	0002301311	**699299**			6CA17C
C180 i, C200 i, C200K i A344660 ▸	E	1998	111,94, 111.95/6	ES	01/94 ▸ 02/01	0002307011	**699298** MQ		**699798**	7SBU16C
C220 i	E	2199	111.961		03/93 ▸ 03/00	0002301311	**699299**			6CA17C
C220 i A344660 ▸	E	2199	111.961	ES	03/93 ▸ 03/00	0002307011	**699298** MQ		**699798**	7SBU16C
C230 i, C230K i	E	2295	111974, 111975		08/95 ▸ 02/01	0002301311	**699299**			6CA17C
C230 i, C230K i A344660 ▸	E	2295	111974, 111975	ES	08/95 ▸ 02/01	0002307011	**699298** MQ		**699798**	7SBU16C
C240 i	E	2398	112.910		06/97 ▸ 02/01	0002301311	**699299**			6CA17C
C240 i A344660 ▸	E	2398	112.910	ES	06/97 ▸ 02/01	0002307011	**699298** MQ		**699798**	7SBU16C
C240 i	E	2597	112.915		04/00 ▸ 02/01	0002301311	**699299**			6CA17C
C280 i	E	2799	112,92, 104941		05/93 ▸ 02/01	0002301311	**699299**			6CA17C
C280 i A344660 ▸	E	2799	112,92, 104941	ES	05/93 ▸ 02/01	0002307011	**699298** MQ		**699798**	7SBU16C
C36 AMG i	E	3606	C36AMG		09/94 ▸ 03/00	0002301311	**699299**			6CA17C
C36 AMG i A344660 ▸	E	3606	C36AMG	ES	09/94 ▸ 03/00	0002307011	**699298** MQ		**699798**	7SBU16C

You must replace the receiver drier with the compressor
Vous devez remplacer la bouteille déshydratante avec le compresseur
Tauschen Sie den Trockner mit dem Kompressor
Es obligatorio cambiar el Filtro Deshidratante con el Compresor
Tem de substituir o filtro desidratante com o compressor
E' necessario cambiare il filtro disidratatore con il compressore
U moet de filterdroger samen met de compressor vervangen
Musisz wymienić filtr osuszacz przy wymianie sprę arki
Рекомендируем замену осушителя вместо с компрессором
Při výměně kompresoru je nutné vyměnit také vysoušeč
Nu untați sa schimbați uscatorul cu compresorul
Kompresörle birlikte nem alıcıyı da değiştirin
Πρέπει να αντικαταστήσετε το φίλτρο υγρού μαζί με το συμπιεστή

		cc				OE NEW	Valeo NEW	OE ES	Valeo ES	
MERCEDES (.../...)										
C CLASS (202) (.../...)										
C43 AMG i	E	4266	113.944		10/97 ▸ 02/01	0002301311	**699299**			6CA17C
C43 AMG i A344660 ▸	E	4266	113.944	ES	10/97 ▸ 02/01	0002307011	**699298** ⊃MQ		**699798**	7SBU16C
C200D	D	1997	601.913		03/93 ▸ 03/00	0002301311	**699299**			6CA17C
C200D A344660 ▸	D	1997	601.913	ES	03/93 ▸ 03/00	0002307011	**699298** ⊃MQ		**699798**	7SBU16C
C200D	D	1998	604.915		03/93 ▸ 02/01	0002301311	**699299**			6CA17C
C200CDI,C220CDI	D	2151	611,96, 611.960A		03/98 ▸ 02/01	0002301311	**699299**			6CA17C
C200CDI,C220CDI A344660 ▸	D	2151	611,96, 611.960A	ES	03/98 ▸ 02/01	0002307011	**699298** ⊃MQ		**699798**	7SBU16C
C220D	D	2155	604.910		08/93 ▸ 02/01	0002301311	**699299**			6CA17C
C220D A344660 ▸	D	2155	604.910	ES	08/93 ▸ 02/01	0002307011	**699298** ⊃MQ		**699798**	7SBU16C
C250D,C250TD	D	2497	605,91, 605,96		05/93 ▸ 02/01	0002301311	**699299**			6CA17C
C250D,C250TD A344660 ▸	D	2497	605,91, 605,96	ES	05/93 ▸ 02/01	0002307011	**699298** ⊃MQ		**699798**	7SBU16C
C CLASS (203) (2000>2003)										
C180,C200	E	1998	111951, 111955	ES	04/00 ▸	0002306511	**813157**	0002306511	**813657**	DCS17E
C200	E	1998	111.951,111.955	ES	04/00 ▸ 12/03	0002309111	**813195**	0012301011	•**813695**	7SEU17C
C200	E	2295	111.981	ES	09/00 ▸ 12/03	0002306511	**813157**	0002306511	**813657**	DCS17E
C230	E	2295	111.981	ES	09/00 ▸ 12/03	0002309111	**813195**	0012301011	•**813695**	7SEU17C
C240	E	2597	112912, 112916	ES	04/00 ▸ 12/03	0002306511	**813157**	0002306511	**813657**	DCS17E
C260	E	2597	112.912,112.916	ES	04/00 ▸ 12/03	0002309111	**813195**	0012301011	•**813695**	7SEU17C
C320	E	3199	112946, 112953 112961	ES	04/00 ▸ 12/03	0002306511	**813157**	0002306511	**813657**	DCS17E
3.2iV618V	E	3199	112.946,112.953	ES	04/00 ▸ 12/03	0002309111	**813195**	0012301011	•**813695**	7SEU17C
C200CDI,C220CDI	D	2148	611.962	ES	04/00 ▸	0002306511	**813157**	0002306511	**813657**	DCS17E
C210CDI	D	2148	611.962	ES	04/00 ▸ 12/03	0002309111	**813195**	0012301011	•**813695**	7SEU17C
C270CDI	D	2685	612.962	ES	08/00 ▸	0002309011	**813157**	0002306511	**813657**	DCS17E
C270CDI	D	2685	612.962	ES	08/00 ▸ 12/03	0002309111	**813195**	0012301011	•**813695**	7SEU17C
C30CDI	D	2950	612.990	ES	09/02 ▸ 12/03	0002309011	**813157**	0002309011	**813657**	DCS17E
C CLASS (203) (2004>)										
C240i	E	2597	112.916	ES	01/04 ▸	0002306511	**813157**	0002306511	**813657**	DCS17E
C240i	E	2597	112.916	ES	01/04 ▸ 12/06	0002309111	**813195**	0012301011	•**813695**	7SEU17C
C320i	E	3199	112946, 112953	ES	01/04 ▸	0002306511	**813157**	0002306511	**813657**	DCS17E
C320i	E	3199	112.946,112.953	ES	01/04 ▸ 02/08	0002309111	**813195**	0012301011	•**813695**	7SEU17C
C200CDICDI,C220CDICDI	D	2148	646.962,646.963	ES	01/04 ▸ 02/08	0002306511	**813157**	0002309011	**813657**	DCS17E
C270CDI	D	2685	612.962	ES	01/04 ▸ 07/05	0002306511	**813157**	0002309011	**813657**	DCS17E
C30CDI	D	2950	612.990	ES	01/04 ▸	0002306511	**813157**	0002306511	**813657**	DCS17E
C CLASS (204) (2007>)										
C180,C200	E	1796	271950, 271952	ES	05/07 ▸	0022303311	**813137**		**813637**	DCS17E
C180,C200	E	1796	271950, 271952	ES	05/07 ▸	0022304911	**813137**		**813637**	DCS17E
2.15 CDI BE 16V	D	2143	651.911	ES	10/08 ▸	0022305011	**813157**	0022305011	**813657**	DCS17E
C200CDI, C220CDI	D	2148	646.811	ES	05/07 ▸	0022303411	**813157**	0022305011	**813657**	DCS17E
1.8 CGI 16V	E	1796	271.820,271.860		2007 ▸	0022304511	**813258**			DCS17
CL CLASS (215) (99>2006)										
CL500 i	E	4966	113.960	ES	08/99 ▸ 04/06	0002306511	**813157**	0002308511	**813657**	DCS17E
CL55 i	E	5439	113.986	ES	09/99 ▸ 04/06	0002306511	**813157**	0002308511	**813657**	DCS17E
CLK (208)										
CLK200 i, CLK200K i	E	1998	111.944/5, 111956		06/97 ▸	0002301311	**699299**			6CA17C
CLK230K i	E	2295	111975, 111982	ES	06/97 ▸	0002300611	**699105**		**699605**	10PA17C

• **New** Nouveau **Neu** Nuevo **Novo** Nuovo **Nieuw** Nowi **Новый** Novy **Nou** Yeni **Νέους**

⊃MQ : **Valeo Matching Quality** Valeo gleichwertige Qualität **Valeo Calidad Equivalente** Część Valeo o Jakości Porównywalnej z Oryginałem

Use technical code cross-list for precise selection page 648
Utiliser les pages Cross-List (page 648) pour identifier la bonne référence
Verwenden Sie die Code-Vergleichsliste zur gezielten Suche des adäquaten Bauteils, Seite 648
Utilizar la lista de códigos cruzados para una selección precisa, página 648
Utilizzare la crosslist dei codici tecnici per una scelta precisa, pag. 648
Gebruik de lijst met verwijzingen naar de technische 648 voor de juiste keuze, op pagina 648
U yj listy kodów technicznych Valeo na stronie 648 dla precyzyjnego doboru
A se folosi paginile crosslist ca sa identifiati referita corecta
Χρησιμοποιήστε την λίστα αντιστοιχίων κωδικών για να κάνετε σωστή και ακριβή επιλογή, σελίδα 648

		CC				OE NEW	Valeo NEW	OE ES	Valeo ES	
MERCEDES (.../...)										
CLK (208) (.../...)										
CLK230K i	E	2295	111975, 111982	ES	06/97 ▸	0002307011	**699298** ⊃MQ		**699798**	7SBU16C
CLK320 i	E	3199	112.940	ES	06/97 ▸	0002307011	**699298** ⊃MQ		**699798**	7SBU16C
CLK (209) (2002>)										
CLK200, CLK200 i F132632 ▸	E	1796	271.94, 271.942	ES	03/02 ▸	0012305511	**813137**		**813637**	DCS17E
CLK240 i	E	2597	112.912		03/02 ▸ 05/05	0002306511	**813157**			DCS17E
CLK 240 i ▸ F050740	E	2597	112.912	ES	03/02 ▸	0002309111	**813195**	0012301011	•**813695**	7SEU17C
CLK320 i	E	3199	112.955		03/02 ▸ 05/05	0002306511	**813157**			DCS17E
CLK 320 i F050741 ▸	E	3199	112.955	ES	03/02 ▸	0002309111	**813195**	0012301011	•**813695**	7SEU17C
CLK270 CDI	D	2685	612.962		10/02 ▸ 05/05	0002306511	**813157**			DCS17E
CLK320 CDI	D	2987	642.910	ES	06/05 ▸	0012307911	**813195**	0012301011	•**813695**	7SEU17C
CLK 240 i	E	2597	112.912	ES	03/02 ▸ 05/05	0002306511	**813157**	0002306511	**813657**	DCS17E
CLK 320 i	E	3199	112.955	ES	03/02 ▸ 05/05	0002306511	**813157**	0002306511	**813657**	DCS17E
CLK 270 CDI	D	2685	612.967	ES	03/02 ▸ 05/05	0002306511	**813157**	0002309011	**813657**	DCS17E
E CLASS (124)										
E200 i, E200T i	E	1998	111.940	ES	07/93 ▸ 02/96	0002300611	**699105**		**699605**	10PA17C
E220 i, E220T i	E	2199	111.960	ES	07/93 ▸ 02/96	0002300611	**699105**		**699605**	10PA17C
E280 i, E280L i, E280T i	E	2799	104.942	ES	07/93 ▸ 02/96	0002300511			**699604**	10PA17C
E300 i, E300T i	E	2962	103.985	ES	07/93 ▸ 02/96	0031319501			**699552**	10P15C
E320 i, E320T i	E	3199	104.992	ES	07/93 ▸ 02/96	0002300511			**699604**	10PA17C
E420 i	E	4196	119.975	ES	07/93 ▸ 09/95	0001301115			**699688**	10PA15C
E500 i	E	4973	119.974	ES	07/93 ▸ 09/95	0001301115			**699688**	10PA15C
E250TD	D	2497	602.962	ES	07/93 ▸ 02/96	0031319501			**699552**	10P15C
E CLASS (210)										
E200 i	E	1998	111.942	ES	04/95 ▸ 06/99	0002307011	**699298** ⊃MQ		**699798**	7SBU16C
E230 i	E	2295	111.970	ES	04/95 ▸ 06/99	0002307011	**699298** ⊃MQ		**699798**	7SBU16C
E280 i, E280L i	E	2799	104.945, 112.921	ES	04/95 ▸ 06/99	0002307011	**699298** ⊃MQ		**699798**	7SBU16C
E320 i	E	3199	104.995, 112.941	ES	04/95 ▸ 06/99	0002307011	**699298** ⊃MQ		**699798**	7SBU16C
E420 i	E	4196	119.985	ES	04/95 ▸ 06/99	0002307011	**699298** ⊃MQ		**699798**	7SBU16C
E50 i	E	4973	119.AMG	ES	03/96 ▸ 06/99	0002307011	**699298** ⊃MQ		**699798**	7SBU16C
E200D	D	1998	604.917	ES	04/95 ▸ 06/99	0002307011	**699298** ⊃MQ		**699798**	7SBU16C
E220D	D	2155	604.912	ES	04/95 ▸ 06/99	0002307011	**699298** ⊃MQ		**699798**	7SBU16C
E250D, E250DL	D	2497	605.912	ES	04/95 ▸ 06/99	0002307011	**699298** ⊃MQ		**699798**	7SBU16C
E290TD, E290TDL	D	2874	602.982	ES	04/95 ▸ 06/99	0002307011	**699298** ⊃MQ		**699798**	7SBU16C
E300D, E300TD	D	2996	606912, 606962	ES	04/95 ▸ 06/99	0002307011	**699298** ⊃MQ		**699798**	7SBU16C
E CLASS (211) (2002>2006)										
E200 CDI, E220 CDI	D	2148	646.820/1, 646951 646961		07/02 ▸	0012301411	**813157**			DCS17E

You must replace the receiver drier with the compressor
Vous devez remplacer la bouteille déshydratante avec le compresseur
Tauschen Sie den Trockner mit dem Kompressor
Es obligatorio cambiar el Filtro Deshidratante con el Compresor
Tem de substituir o filtro desidratante com o compressor
E' necessario cambiare il filtro disidratatore con il compressore
U moet de filterdroger samen met de compressor vervangen
Musisz wymienić filtr osuszacz przy wymianie sprę arki
Рекомендируем замену осушителя вместо с компрессором
Při výměně kompresoru je nutné vyměnit také vysoušeč
Nu untați sa schimbați uscatorul cu compresorul
Kompresörle birlikte nem alıcıyı da değiştirin
Πρέπει να αντικαταστήσετε το φίλτρο υγρού μαζί με το συμπιεστή

		cc				OE NEW	Valeo NEW	OE ES	Valeo ES	
MERCEDES (.../...)										
E CLASS (211) (2002>2006) (.../...)										
E 320 i	E	3199	112.949	ES	03/02 ▸	0002306511	**813157**	0012301411	**813657**	DCS17E
E 500 i	E	4966	113.967	ES	03/02 ▸	0002306511	**813157**	0012301411	**813657**	DCS17E
E 55 i	E	5439	113.990	ES	07/02 ▸	0002306511	**813157**	0012301411	**813657**	DCS17E
E 200 CDI,E 220 CDI	D	2148	646.951,646.961	ES	03/02 ▸	0002306511	**813157**	0012301411	**813657**	DCS17E
E CLASS (211) (2006>2009)										
5.4 i V8 32V	E	5461	273.960,273.962	ES	04/06 ▸	0002306511	**813157**	0012301411	**813657**	DCS17E
6.2 i V8 32V	E	6208	156.983	ES	04/06 ▸	0002306511	**813157**	0012301411	**813657**	DCS17E
E CLASS (212) (2009>)										
1.8 CGI 16V	E	1796	271.820,271.860		03/09 ▸ 02/10	0032304811	**813258**			DCS17
G CLASS (463)										
2.0 i	E	1997	102.965	ES	09/89 ▸	0002300511			**699604**	10PA17C
2.3 i	E	2299	102.989	ES	09/89 ▸	0002300511			**699604**	10PA17C
3.0 i	E	2962	103.987	ES	09/89 ▸	0002300511			**699604**	10PA17C
3.2 i	E	3199	104.996	ES	10/93 ▸ 12/97	0002300511			**699604**	10PA17C
3.0 TD	D	2996	603931, 606964	ES	09/89 ▸	0002307011	**699298** ⊃MQ		**699798**	7SBU16C
M CLASS (163)										
ML230 i	E	2295	111.977	ES	03/98 ▸	0002307011	**699298** ⊃MQ		**699798**	7SBU16C
ML430 i	E	4266	113.942	ES	03/98 ▸	0002307011	**699298** ⊃MQ		**699798**	7SBU16C
S CLASS (126)										
260 SE i	E	2599	103.941	ES	09/85 ▸ 06/91	0031319501			**699552**	10P15C
300 SE i, 300 SEL i	E	2962	103.981	ES	09/85 ▸ 07/91	0031319501			**699552**	10P15C
380 SEC i	E	3818	116.963	ES	09/81 ▸ 08/85	1161310001			**699688**	10PA15C
420 SEC i	E	4196	116.965	ES	09/85 ▸ 12/91	1161310001			**699688**	10PA15C
500 SE i, 500 SEC i 500 SEL i	E	4973	117961, 117963	ES	09/81 ▸ 06/91	1161310001			**699688**	10PA15C
560 SE i, 560 SEC i 560 SEL i	E	5547	117.968	ES	09/85 ▸ 12/91	1161310001			**699688**	10PA15C
S CLASS (140)										
3.0 TD	D	2996	606.961	ES	08/96 ▸ 08/98	0002307011	**699298** ⊃MQ		**699798**	7SBU16C
S CLASS (220)										
S280 i, S280L i A316704 ▸	E	2799	112.922	ES	09/02 ▸ 09/04	0002309111	**813195**	0012301011	•**813695**	7SEU17C
S280 i	E	2799	112.922	ES	03/99 ▸ 09/04	0002308511	**813157**	0002308511	**813657**	DCS17E
S320 i, S320L i A316704 ▸	E	3199	112.944	ES	09/02 ▸ 09/04	0002309111	**813195**	0012301011	•**813695**	7SEU17C
S320 i,S320L i	E	3199	112.944	ES	09/98 ▸ 09/04	0002308511	**813157**	0002308511	**813657**	DCS17E
S350 i, S350L i	E	3724	112972, 112975	ES	09/02 ▸ 09/04	0002309111	**813195**	0012301011	•**813695**	7SEU17C
S430 i, S430L i	E	4266	113941, 113948	ES	09/02 ▸ 09/04	0002309111	**813195**	0012301011	•**813695**	7SEU17C
S430 i,S430L i	E	4266	113.941	ES	09/98 ▸ 09/04	0002308511	**813157**	0002308511	**813657**	DCS17E
S500 i, S500L i	E	4966	113966, 113,96	ES	09/02 ▸ 09/04	0002309111	**813195**	0012301011	•**813695**	7SEU17C
S500 i,S500L i	E	4966	113.960	ES	09/98 ▸ 09/04	0002308511	**813157**	0002308511	**813657**	DCS17E
S55 i A316704 ▸	E	5439	113.986	ES	09/02 ▸ 09/04	0002309111	**813195**	0012301011	•**813695**	7SEU17C
S55 i	E	5439	113.986,113.991	ES	01/00 ▸ 09/04	0002308511	**813157**	0002308511	**813657**	DCS17E
S320CDI CDI,S320CDIL CDI	D	3222	648.960	ES	09/02 ▸ 09/04	0002308511	**813157**	0002308511	**813657**	DCS17E

• **New** Nouveau **Neu** Nuevo **Novo** Nuovo **Nieuw** Nowi **Новый** Novy **Nou** Yeni **Νέους**

⊃MQ : **Valeo Matching Quality** Valeo gleichwertige Qualität **Valeo Calidad Equivalente**
Część Valeo o Jakości Porównywalnej z Oryginalem

Use technical code cross-list for precise selection page 648
Utiliser les pages Cross-List (page 648) pour identifier la bonne référence
Verwenden Sie die Code-Vergleichsliste zur gezielten Suche des adäquaten Bauteils, Seite 648
Utilizar la lista de códigos cruzados para una selección precisa, página 648
Utilizzare la crosslist dei codici tecnici per una scelta precisa, pag. 648
Gebruik de lijst met verwijzingen naar de technische 648 voor de juiste keuze, op pagina 648
U yj listy kodów technicznych Valeo na stronie 648 dla precyzyjnego doboru
A se folosi paginile crosslist ca sa identifiati referita corecta
Χρησιμοποιήστε την λίστα αντιστοιχίων κωδικών για να κάνετε σωστή και ακριβή επιλογή, σελίδα 648

		cc				OE NEW	Valeo NEW	OE ES	Valeo ES	
MERCEDES (.../...)										
S CLASS (220) (.../...)										
S320CDI CDI,S320CDIL CDI	D	3224	613.960	ES	01/00 ▸ 09/02	0002308511	**813157**	0002308511	**813657**	DCS17E
SL (129)										
500 i	E	4973	119,96, 119972	ES	03/89 ▸ 07/93	0002300611	**699105**		**699605**	10PA17C
SL (230) (2001>2008)										
SL500 i	E	4966	113.963	ES	08/01 ▸ 07/02	0002308511	**813157**	0002308511	**813657**	DCS17E
SL55 AMG i	E	5439	113.992	ES	08/01 ▸ 07/02	0002308511	**813157**	0002308511	**813657**	DCS17E
SLK (R170)										
SLK200 i, SLK200K i	E	1998	111943, 111946	ES	08/96 ▸ 03/00	0002307011	**699298** ⊃MQ		**699798**	7SBU16C
SLK230K i	E	2295	111.973	ES	08/96 ▸ 03/00	0002307011	**699298** ⊃MQ		**699798**	7SBU16C
VANEO (414)										
1.6 i	E	1598	166.960, 166.961	ES	10/01 ▸ 07/05	0002309411	**699300**		•**699800**	6SEU12C
1.9 i	E	1898	166.991	ES	10/01 ▸ 07/05	0002309411	**699300**		•**699800**	6SEU12C
1.7 CDI	D	1689	668.914	ES	10/01 ▸ 07/05	0002309411	**699300**		•**699800**	6SEU12C
V CLASS (638/2)										
V200 ▸016685	E	1998	111.948	ES	10/96 ▸	0002300611	**699105**		**699605**	10PA17C
V200 016686 ▸	E	1998	111.948	ES	10/96 ▸ 12/02	0002307011	**699298** ⊃MQ		**699798**	7SBU16C
V230 ▸016685	E	2295	111.978	ES	10/96 ▸	0002300611	**699105**		**699605**	10PA17C
V230 016686 ▸	E	2295	111.978	ES	10/96 ▸ 12/02	0002307011	**699298** ⊃MQ		**699798**	7SBU16C
V280 ▸016685	E	2799	104.900	ES	10/96 ▸	0002300611	**699105**		**699605**	10PA17C
V280 016686 ▸	E	2799	104.900	ES	10/96 ▸ 12/02	0002307011	**699298** ⊃MQ		**699798**	7SBU16C
V230TD	D	2299	601.970		10/96 ▸ 12/02	0002303711	**813173**			10P15C
V230TD 016691 ▸	D	2299	601.970	ES	10/96 ▸ 12/02	0002307011	**699298** ⊃MQ		**699798**	7SBU16C
V230TD ▸016690	D	2299	601.970	ES	10/96 ▸	0002300611	**699105**		**699605**	10PA17C
MERCEDES										
SPRINTER (95>)										
2.3 i	E	2295	111.979	ES	02/95 ▸	0002307011	**699298** ⊃MQ		**699798**	7SBU16C
2.3 i	E	2295	111.979	ES	02/95 ▸	0002300611	**699105**		**699605**	10PA17C
2.2 D	D	2151	611DE22LA	ES	11/99 ▸	0002300611	**699105**		**699605**	10PA17C
2.3 D	D	2299	601.943	ES	02/95 ▸	0002300611	**699105**		**699605**	10PA17C
2.7 D	D	2686	612DE27LA	ES	11/99 ▸	0002300611	**699105**		**699605**	10PA17C
2.9 D	D	2874	602.980	ES	02/95 ▸	0002300611	**699105**		**699605**	10PA17C
SPRINTER (2006>)										
2.2 D	D	2143	651.957	ES	07/09 ▸		**813157**	0022307211	**813657**	DCS17E
VITO (96>2003)										
2.0 i ▸016685	E	1998	111.948	ES	01/96 ▸	0002300611	**699105**		**699605**	10PA17C

You must replace the receiver drier with the compressor
Vous devez remplacer la bouteille déshydratante avec le compresseur
Tauschen Sie den Trockner mit dem Kompressor
Es obligatorio cambiar el Filtro Deshidratante con el Compresor
Tem de substituir o filtro desidratante com o compressor
E' necessario cambiare il filtro disidratatore con il compressore
U moet de filterdroger samen met de compressor vervangen
Musisz wymienić filtr osuszacz przy wymianie sprę arki
Рекомендируем замену осушителя вместо с компрессором
Při výměně kompresoru je nutné vyměnit také vysoušeč
Nu untați sa schimbați uscatorul cu compresorul
Kompresörle birlikte nem alıcıyı da değiştirin
Πρέπει να αντικαταστήσετε το φίλτρο υγρού μαζί με το συμπεστή

		cc				OE NEW	Valeo NEW	OE ES	Valeo ES	
MERCEDES (.../...)										
VITO (96>2003) (.../...)										
2.0 i ▸016686	E	1998	111.948	ES	01/96 ▸ 09/03	0002307011	**699298** ⊃MQ		**699798**	7SBU16C
2.3 D, 2.3 TD ▸016690	D	2299	601,97, 601942	ES	01/96 ▸	0002300611	**699105**		**699605**	10PA17C
2.3 D, 2.3 TD ▸016691	D	2299	601942, 601,97	ES	01/96 ▸ 09/03	0002307011	**699298** ⊃MQ		**699798**	7SBU16C
2.3 D, 2.3 TD	D	2299	601,97, 601942		01/96 ▸ 09/03	0002303711	**813173**			10P15C
MERCEDES										
ACTROS										
1831, 1835, 1840, 1843	D	11946			09/96 ▸ 10/02	0002340811	**813031**			10PA15C
1848, 1857, 2031, 2040	D	15928			09/96 ▸ 10/02	0002340811	**813031**			10PA15C
SK										
1728, 1729/L	D	15080	OM442 906/907/908/923/925		07/87 ▸ 09/96	5412300011	**813030**			10PA15C
1735, 1748	D	14618	OM442 944/963/964/976		07/87 ▸ 09/96	5412300011	**813030**			10PA15C
1831	D	9572	OM401,972/979/993		07/87 ▸ 09/96	5412300011	**813030**			10PA15C
MITSUBISHI										
CARISMA										
1.9 TD	D	1870	F8Q, F9Q1, F9Q2		05/96 ▸	MR262971	**699345**			SD7H15
MG										
MG ZS										
2.5 i V6 24V	E	2497	25KV6	ES	07/01 ▸ 04/05	JPB101430A		JPB000040A	•**813832**	7SB16C
MG ZT										
2.5 i V6 24V	E	2497	25K6,25KV6	ES	10/01 ▸ 04/05	JPB000040A		JPB000040A	•**813832**	7SB16C
NISSAN										
ALMERA (2000>2006)										
1.5 i 16V	E	1497	QG15DE	ES	02/00 ▸ 11/06	926009F510		926009F510	•**813834**	CVC
1.8 i 16V	E	1769	QG18DE	ES	02/00 ▸ 11/06	926009F510		926009F510	•**813834**	CVC
ALMERA TINO (2000>)										
1.8 i 16V	E	1769	QG18DE	ES	08/00 ▸ 11/05	926009F501		926009F510	•**813834**	CVC
2.0 i 16V	E	1998	SR20DE	ES	08/00 ▸ 01/03	926009F510		926009F510	•**813834**	CVC
MICRA (K12)										
1.2 i 16V	E	1240	CR12DE		06/05 ▸	92600AX80A	**813113**			DKV08R
1.4 i 16V	E	1386	CR14DE		06/05 ▸	92600AX80A	**813113**			DKV08R
1.6 i 16V	E	1598	HR16DE		06/05 ▸	92600CJ700	•**813343**			DKV08R
1.5 dCi	D	1461	K9K.7		06/05 ▸	92600CJ700	•**813343**			DKV08R
MURANO										
3.5 V6 24V	E	3498	VQ35DE		04/05 ▸	92600CA01A	**813111**			DKS17D
NOTE (2005>)										
1.4 i 16V	E	1386	CR14DE		09/05 ▸	92600AX80A	**813113**			DKV08R

• **New** Nouveau **Neu** Nuevo **Novo** Nuovo **Nieuw** Nowi **Новый** Novy **Nou** Yeni **Νέους**

⊃MQ : **Valeo Matching Quality** Valeo gleichwertige Qualität **Valeo Calidad Equivalente**
Część Valeo o Jakości Porównywalnej z Oryginałem

Use technical code cross-list for precise selection page 648
Utiliser les pages Cross-List (page 648) pour identifier la bonne référence
Verwenden Sie die Code-Vergleichsliste zur gezielten Suche des adäquaten Bauteils, Seite 648
Utilizar la lista de códigos cruzados para una selección precisa, página 648
Utilizzare la crosslist dei codici tecnici per una scelta precisa, pag. 648
Gebruik de lijst met verwijzingen naar de technische 648 voor de juiste keuze, op pagina 648
U yj listy kodów technicznych Valeo na stronie 648 dla precyzyjnego doboru
A se folosi paginile crosslist ca sa identifiati referita corecta
Χρησιμοποιήστε την λίστα αντιστοιχίων κωδικών για να κάνετε σωστή και ακριβή επιλογή, σελίδα 648

		cc				OE NEW	Valeo NEW	OE ES	Valeo ES	
NISSAN (.../...)										
NOTE (2005>) (.../...)										
1.6 i 16V	E	1598	HR16DE		09/05 ▸	92600CJ700	•**813343**			DKV08R
PRIMERA (P11) (96>2001)										
1.8 i 16V	E	1769	QG18DE	ES	05/98 ▸ 02/02	926009F510		926009F510	•**813834**	CVC
2.0 i 16V	E	1998	SR20DE,SR20DEF	ES	06/99 ▸ 02/02	926009F510		926009F510	•**813834**	CVC
PRIMERA (P12) (2001>)										
1.6 i 16V	E	1596	QG16DE	ES	03/02 ▸ 2006	926009F510		926009F510	•**813834**	CVC
1.8 i 16V	E	1769	QG18DE	ES	03/02 ▸ 2006	926009F510		926009F510	•**813834**	CVC
2.2 VDi 16V,2.2 dCi 16V	D	2184	YD22DDT	ES	02/02 ▸ 06/03	926009F501		926009F510	•**813834**	CVC
QASHQAI (2007>2010)										
2.0 dCi	D	1995	M9R/F		03/07 ▸ 01/10	926001DE0A	**813262**			DCS17
QASHQAI (2010>)										
2.0 dCi 150	D	1994	M9R		01/10 ▸	926001DE0A	**813262**			DCS17
TERRANO III										
3.0 Di	D	2953	ZD30TI		02/04 ▸	92600VK110	**813110**			DKS17CH
TIIDA (C11X) (2007>)										
1.6 i 16V	E	1598	HR16DE		03/07 ▸	92600CJ70B	•**813343**			DKV08R
X-TRAIL (T30)										
2.2 Di	D	2184	YD22ETI-114		06/01 ▸ 09/03	926005M301	**813115**			DKV11G
2.2 dCi 16V	D	2184	YD22ETI		10/05 ▸	92600ES60A	**813117**			DKV11G
X-TRAIL (T31>)										
2.0 dCi 16V	D	1995	M9R/F		03/07 ▸ 06/07	926001DE0A	**813262**			DCS17
NISSAN										
KING CAB (D22)										
2.4 i, 2.4 i 4WD	E	2389	KA24DE, KA24E-1		02/98 ▸ 03/03	92600VK200	**813108**			DKS17CH
2.5 Tdi, 2.5 Tdi 4WD	D	2488	YD25DDTI		03/03 ▸	92600VK510	**813109**			DKS17CH
PRIMASTAR (2006>)										
2.0 dCi	D	1995	M9R.7.80	ES	09/06 ▸	276300Q0A	**813265**		•**813765**	DCS17
OPEL										
AGILA										
1.0 i 12V	E	973	Z10XE	ES	03/00 ▸ 08/03			6854021	**699748**	V5
1.0 i Twinport 12V	E	998	Z10XEP	ES	08/03 ▸			6854021	**699748**	V5
1.2 i 16V	E	1199	Z12XE	ES	03/00 ▸ 08/04			6854021	**699748**	V5
1.2 i Twinport 16V	E	1229	Z12XEP	ES	09/04 ▸			R1580052	**699771**	CVC
1.3 CDTi	D	1248	Z13DT	ES	08/03 ▸			6854055	**699867**	SD6V10
ASTRA F (91>98)										
1.4, 1.4 i, 1.4 i 16V	E	1389	14NV, 14SE, C14NZ C14SE, X14NZ X14XE	ES	03/91 ▸ 02/01	1854008	**699071**	1854124	**699571**	V5
1.6 i, 1.6 i 16V	E	1598	16LZ2, C16NZ C16SE, X16SZ X16SZR, X16XEL	ES	09/91 ▸ 02/01	1854008	**699071**	1854124	**699571**	V5

You must replace the receiver drier with the compressor
Vous devez remplacer la bouteille déshydratante avec le compresseur
Tauschen Sie den Trockner mit dem Kompressor
Es obligatorio cambiar el Filtro Deshidratante con el Compresor
Tem de substituir o filtro desidratante com o compressor
E' necessario cambiare il filtro disidratatore con il compressore
U moet de filterdroger samen met de compressor vervangen
Musisz wymienić filtr osuszacz przy wymianie sprę arki
Рекомендируем замену осушителя вместо с компрессором
Při výměně kompresoru je nutné vyměnit také vysoušeč
Nu untați sa schimbați uscatorul cu compresorul
Kompresörle birlikte nem alıcıyı da değiştirin
Πρέπει να αντικαταστήσετε το φίλτρο υγρού μαζί με το συμπιεστή

		CC				OE NEW	Valeo NEW	OE ES	Valeo ES	
OPEL (.../...)										
ASTRA F (91>98) (.../...)										
1.8 i	E	1796	C18NZ	ES	09/91 ▸ 01/98	1854008	**699071**	1854124	**699571**	V5
1.8 i 16V	E	1799	C18XE, C18XEL X18XE	ES	07/93 ▸ 02/01	1854008	**699071**	1854124	**699571**	V5
2.0 i, 2.0 i 16V	E	1998	C20NE, C20XE X20XEV	ES	09/91 ▸ 02/01	1854008	**699071**	1854124	**699571**	V5
1.7 TD, 1.7 TD Ecoturbo 1.7 TD Turbo	D	1686	17TD, X17DTL	ES	09/91 ▸ 01/98	1854008	**699071**	1854124	**699571**	V5
1.7 D	D	1699	17D, 17DR	ES	09/91 ▸ 01/98	1854008	**699071**	1854124	**699571**	V5
ASTRA G (98>)										
1.2 i 16V	E	1199	X12XE	ES	02/98 ▸ 08/00			6854022	**699749**	CVC
1.2 i 16V	E	1199	Z12XE	ES	09/00 ▸	1854119			**699898**	CVC
1.4 i 16V	E	1389	Z14XE	ES	02/98 ▸	1854111	**699270** ⊃MQ	6854024	**699770**	CVC
1.4 i 16V	E	1389	X14XE	ES	02/98 ▸	1854102	**699250** ⊃MQ		**699750**	CVC
1.6 i, 1.6 i 16V	E	1598	Z16SE/E4, Z16XE	ES	02/98 ▸	1854111	**699270** ⊃MQ	6854024	**699770**	CVC
1.6 i, 1.6 i 16V	E	1598	C16SEL, X16SZR X16XEL	ES	02/98 ▸	1854102	**699250** ⊃MQ		**699750**	CVC
1.6 i	E	1598	Z16SE/E2	ES	09/00 ▸ 02/01	1854008	**699071**	1854124	**699571**	V5
1.6 i 22271937 ▸	E	1598	Z16SE/E4	ES	01/02 ▸ 02/04	6854015		93176127	**699900**	SD6V12
1.8 i 16V	E	1796	X18XE1	ES	02/98 ▸	1854102	**699250** ⊃MQ		**699750**	CVC
1.8 i 16V	E	1796	Z18XE, Z18XEL	ES	02/00 ▸	1854111	**699270** ⊃MQ	6854024	**699770**	CVC
2.0 i 16V	E	1998	X20XEV	ES	02/98 ▸ 12/99	1854102	**699250** ⊃MQ		**699750**	CVC
2.0 16V OPC	E	1998	X20XER-160	ES	11/99 ▸ 09/02			6854023	**699752**	CVC
2.0 i Turbo 16V	E	1998	Z20LER, Z20LET	ES	02/00 ▸	1854111	**699270** ⊃MQ	6854024	**699770**	CVC
2.2 i 16V	E	2198	Z22SE	ES	10/99 ▸	1854113	**699307**	6854025	**699807**	PXV16
1.7 TD, 1.7 TD Ecoturbo	D	1686	X17DTL	ES	02/98 ▸ 08/00	1854103	**699251** ⊃MQ	6854026	**699751**	CVC
1.7 CDTI, 1.7 DTi 16V	D	1686	Y17DT, Z17DTL		02/00 ▸	1854122	**699405**			SD6V12
1.7 DTi 16V	D	1686	Y17DT	ES	02/00 ▸ 03/03	93176884			**699870**	SD6V12
2.0 DTi 16V, 2.0 Di 16V	D	1995	Y20DTH, Y20DTL	ES	02/98 ▸	1854107	**699306** ⊃MQ	6854028	**699806**	SD6V12
2.0 DTi 16V, 2.0 Di 16V	D	1995	X20DTL	ES	02/98 ▸	1854138			**699899**	SD6V12
2.2 DTI 16V	D	2171	Y22DTR	ES	03/01 ▸	1854107	**699306** ⊃MQ	6854028	**699806**	SD6V12
ASTRA H (2004>)										
1.2 i Twinport 16V	E	1229	Z12XEP	ES	03/04 ▸	6854058			**813600**	CVC
1.4 i Twinport 16V	E	1364	Z14XEL,Z14XEP	ES	03/04 ▸	6854058			**813600**	CVC
1.8 i 16V	E	1796	Z18XE	ES	03/04 ▸	6854058			**813600**	CVC
2.0 i Turbo 16V	E	1998	Z20LEH/L/R	ES	03/04 ▸	6854060			**813605**	CVC
1.3 CDTI 16V	D	1248	Z13DTH	ES	08/05 ▸	6854066			**813604**	CVC
1.7 CDTI, 1.7 DTi 16V	D	1686	Z17DTH, Z17DTL	ES	03/04 ▸	6854056	•**813101**		**813601**	CVC
1.9 CDTI, 1.9 CDTI 16V	D	1910	Z19DTH, Z19DTL	ES	07/04 ▸	6854065		6854098	**813602**	CVC
CALIBRA										
2.0 i, 2.0 i 16S, Turbo 16S ▸ N1299999	E	1998	C20LET, C20NE C20XE	ES	09/89 ▸	1854054	**699070**	1854129	**699570**	V5
2.0 i, 2.0 i 16S, Turbo 16S P1000001 ▸ P1999999	E	1998	C20LET, C20NE C20XE, X20XEV	ES	01/92 ▸			1854126	**699566**	V5

• **New** Nouveau **Neu** Nuevo **Novo** Nuovo **Nieuw** Nowi **Новый** Nový **Nou** Yeni **Νέους**

⊃MQ : **Valeo Matching Quality** Valeo gleichwertige Qualität **Valeo Calidad Equivalente** Część Valeo o Jakości Porównywalnej z Oryginałem

Use technical code cross-list for precise selection page 648
Utiliser les pages Cross-List (page 648) pour identifier la bonne référence
Verwenden Sie die Code-Vergleichsliste zur gezielten Suche des adäquaten Bauteils, Seite 648
Utilizar la lista de códigos cruzados para una selección precisa, página 648
Utilizzare la crosslist dei codici tecnici per una scelta precisa, pag. 648
Gebruik de lijst met verwijzingen naar de technische 648 voor de juiste keuze, op pagina 648
U yj listy kodów technicznych Valeo na stronie 648 dla precyzyjnego doboru
A se folosi paginile crosslist ca sa identifiati referita corecta
Χρησιμοποιήστε την λίστα αντιστοιχίων κωδικών για να κάνετε σωστή και ακριβή επιλογή, σελίδα 648

		CC				OE NEW	Valeo NEW	OE ES	Valeo ES	
OPEL (.../...)										
CALIBRA (.../...)										
2.0 i, 2.0 i 16S, Turbo 16S R1000001 ▸	E	1998	C20LET, C20NE C20XE, X20XEV	ES	06/94 ▸ 07/97	1854008	**699071**	1854124	**699571**	V5
2.5 i V6, 2.5 i V6 24V P1000001 ▸ P1999999	E	2498	C25XE, X25XE-170	ES	05/93 ▸			1854126	**699566**	V5
2.5 i V6	E	2498	C25XE	ES	05/93 ▸ 06/96	1854008	**699071**	1854124	**699571**	V5
CORSA B (93>2000)										
1.0 i 12V X3043503 ▸	E	973	X10XE	ES	03/98 ▸ 08/00			6854021	**699748**	V5
1.0 i 12V W4328199 ▸ X4030714	E	973	X10XE	ES	03/97 ▸	1854009		1854100	**699748**	V5
1.2 i 16V X3043503 ▸	E	1199	X12XE	ES	03/98 ▸ 08/00			6854021	**699748**	V5
1.2 i 16V W4328199 ▸ X4030714	E	1199	X12XE	ES	03/98 ▸	1854009		1854100	**699748**	V5
1.4 i, 1.4 i 16V	E	1389	C14NZ, C14SE X14SZ, X14XE	ES	03/93 ▸ 08/00	1854094	**699072** MQ	1854141	**699572**	V5
1.6 i 16V	E	1598	C16XE	ES	03/93 ▸ 08/00	1854094	**699072** MQ	1854141	**699572**	V5
CORSA C (2000>2003)										
1.0 i 12V	E	973	Z10XE	ES	09/00 ▸ 08/03	1854146			**699893**	CVC
1.2 i 16V	E	1199	Z12XE	ES	09/00 ▸ 08/03	1854119			**699898**	CVC
1.4 i 16V	E	1389	Z14XE	ES	09/00 ▸ 08/03	1854111	**699270** MQ	6854024	**699770**	CVC
1.8 i 16V	E	1796	Z18XE	ES	09/00 ▸ 08/03	1854111	**699270** MQ	6854024	**699770**	CVC
1.7 DI 16V, 1.7 DTi 16V	D	1686	Y17DT, Y17DTL	ES	09/00 ▸ 08/03	1854147	**699306** MQ	6854048	**699806**	SD6V12
CORSA C (2003>2006)										
1.0 i Twinport 12V	E	998	Z10XEP	ES	09/03 ▸ 06/06	1854146			**699893**	CVC
1.2 i 16V	E	1199	Z12XE	ES	09/03 ▸ 08/04	1854119			**699898**	CVC
1.4 i Twinport 16V	E	1364	Z14XEP	ES	09/03 ▸ 06/06			6854032	**699912**	SD6V12
1.8 16V	E	1796	Z18XE	ES	09/03 ▸ 06/06	1854111	**699270** MQ	6854024	**699770**	CVC
1.7 CDTI	D	1686	Z17DTH	ES	09/03 ▸ 06/06	1854147	**699306** MQ	6854048	**699806**	SD6V12
FRONTERA (91>98)										
2.8 TDi	D	2771	4JB1-TC	ES	05/95 ▸ 07/96	1854054	**699070**	1854129	**699570**	V5
FRONTERA (98>)										
2.2 DTi 16V	D	2171	Y22DTH(120)	ES	03/01 ▸	1854144	**699102** MQ		**699602**	V5
2.2 DTi 16V	D	2172	X22DTH	ES	10/98 ▸	1854144	**699102** MQ		**699602**	V5
MERIVA										
1.4 i Twinport 16V	E	1364	Z14XEP	ES	09/04 ▸	1854111	**699270** MQ	6854024	**699770**	CVC
1.6 i, 1.6 i 16V	E	1598	Z16SE/E4, Z16XE	ES	05/03 ▸	1854111	**699270** MQ	6854024	**699770**	CVC
1.8 i 16V	E	1796	Z18XE	ES	05/03 ▸	1854111	**699270** MQ	6854024	**699770**	CVC
1.7 CDTi, 1.7 DTi 16V	D	1686	Y17DT, Z17DTH	ES	05/03 ▸	1854147	**699306** MQ	6854048	**699806**	SD6V12

You must replace the receiver drier with the compressor
Vous devez remplacer la bouteille déshydratante avec le compresseur
Tauschen Sie den Trockner mit dem Kompressor
Es obligatorio cambiar el Filtro Deshidratante con el Compresor
Tem de substituir o filtro desidratante com o compressor
E' necessario cambiare il filtro disidratatore con il compressore
U moet de filterdroger samen met de compressor vervangen
Musisz wymienić filtr osuszacz przy wymianie sprę arki
Рекомендируем замену осушителя вместо с компрессором
Při výměně kompresoru je nutné vyměnit také vysoušeč
Nu untați sa schimbați uscatorul cu compresorul
Kompresörle birlikte nem alıcıyı da değiştirin
Πρέπει να αντικαταστήσετε το φίλτρο υγρού μαζί με το συμπεστή

		cc				OE NEW	Valeo NEW	OE ES	Valeo ES	
OPEL (.../...)										
OMEGA A (86>94)										
2.0 i ▸K1000098	E	1998	20SE, C20NE	ES	10/86 ▸	1286220			**699695**	V5
2.4 i K10000099 ▸	E	2410	C24NE	ES	06/89 ▸ 07/91	1854057	**699073**	1854021	**699573**	V5
2.6 i	E	2594	C26NE	ES	09/90 ▸ 05/94	1854025			**699574**	V5
3000 i ▸K1000098	E	2968	30NE, C30NE	ES	02/87 ▸ 06/89	1854021			**699573**	V5
3000 i K10000099 ▸ L1999999	E	2968	30NE, C30LE C30NE	ES	06/89 ▸	1854057	**699073**	1854021	**699573**	V5
3.0 i, 3.0 i 24V	E	2968	30NE, C30SE	ES	03/87 ▸ 08/93	1854025			**699574**	V5
3.6 Lotus	E	3615	C36GET	ES	09/90 ▸ 05/94	1854025			**699574**	V5
2.3 D, 2.3 TD ▸K1000098	D	2260	23DTR, 23YD 23YDT	ES	10/86 ▸ 06/89	1854021			**699573**	V5
2.3 D, 2.3 TD K10000099 ▸	D	2260	23DTR, 23YD	ES	06/89 ▸ 02/94	1854057	**699073**	1854021	**699573**	V5
OMEGA B (94>)										
2.0 i, 2.0 i 16V ▸Y1182315	E	1998	20SE, X20SE X20XEV	ES	02/94 ▸ 07/03	1854145	**699077** ⊃MQ	1854125	**699577**	V5
2.2 i 16V ▸Y1182315	E	2198	Z22XE	ES	08/99 ▸	1854145	**699077** ⊃MQ	1854125	**699577**	V5
2.5 i V6 24V ▸Y1182315	E	2498	X25XE-170	ES	02/94 ▸ 09/00	1854145	**699077** ⊃MQ	1854125	**699577**	V5
2.6 i V6 24V ▸Y1182315	E	2597	Y26SE	ES	09/00 ▸	1854145	**699077** ⊃MQ	1854125	**699577**	V5
3.0 i V6 24V ▸Y1182315	E	2962	X30XE	ES	02/94 ▸ 09/00	1854145	**699077** ⊃MQ	1854125	**699577**	V5
3.2 i V6 24V ▸Y1182315	E	3175	Y32SE	ES	09/00 ▸	1854145	**699077** ⊃MQ	1854125	**699577**	V5
2.2 DTi 16V	D	2171	Y22DTH(120)	ES	09/00 ▸ 07/03	1854104			**699743**	V5
2.5 TD	D	2497	U25TD, X25TD	ES	02/94 ▸ 07/03			1854128	**699745**	6CA17C
2.5 TD	D	2497	U25TD, X25TD	ES	01/97 ▸ 07/03			90564976	**699767**	7SB16C
2.5 TDi 24V	D	2497	Y25DT	ES	09/01 ▸ 07/03	6854040			**699894**	7SBU16C
SENATOR B (87>93)										
2.5 i	E	2490	25NE	ES	02/87 ▸ 08/90	1854057	**699073**	1854021	**699573**	V5
2.6 i	E	2594	C26NE	ES	09/90 ▸ 08/93	1854025			**699574**	V5
3.0 i	E	2968	C30LE, C30NE	ES	02/87 ▸ 06/93	1854057	**699073**	1854021	**699573**	V5
3.0 i, 3.0 i 24V	E	2968	C30NE, C30SE	ES	09/90 ▸ 08/93	1854025			**699574**	V5
SIGNUM										
1.8 i 16V	E	1796	Z18XE	ES	06/03 ▸	6854007	**699317**	6854035	**699817**	PXV16
1.8 i 16V	E	1796	Z18XER	ES	10/05 ▸			6854085	**813685**	SD7V16
2.0 i Turbo 16V	E	1998	Z20NET	ES	06/03 ▸	6854003	**699318**		**699818**	PXV16
2.2 DIG 16V	E	2198	Z22YH	ES	06/03 ▸	6854003	**699318**		**699818**	PXV16
3.2 i V6 24V ▸41048789	E	3175	Z32SE	ES	06/03 ▸	6854019	**699355**	6854036	**699855**	PXV16
1.9 CDTI 16V	D	1910	Z19DT, Z19DTH	ES	04/04 ▸ 09/05	6854063	•**699368**	13171593	**699868**	SD7V16
1.9 CDTI, 1.9 CDTI 16V 51079584 ▸	D	1910	Z19DT, Z19DTH Z19DTL	ES	10/05 ▸	6854083			**813688**	V5
2.0 DTi 16V ▸41000251	D	1995	Y20DTH	ES	06/03 ▸	6854019	**699355**	6854036	**699855**	PXV16
2.2 DTI 16V ▸41000251	D	2171	Y22DTR	ES	06/03 ▸	6854019	**699355**	6854036	**699855**	PXV16
3.0 CDTi V6 24V	D	2958	Y30DT	ES	06/03 ▸	6854019	**699355**	6854036	**699855**	PXV16

• **New** Nouveau **Neu** Nuevo **Novo** Nuovo **Nieuw** Nowi **Новый** Novy **Nou** Yeni **Νέους**

⊃MQ : **Valeo Matching Quality** Valeo gleichwertige Qualität **Valeo Calidad Equivalente** Część Valeo o Jakości Porównywalnej z Oryginałem

Use technical code cross-list for precise selection page 648
Utiliser les pages Cross-List (page 648) pour identifier la bonne référence
Verwenden Sie die Code-Vergleichsliste zur gezielten Suche des adäquaten Bauteils, Seite 648
Utilizar la lista de códigos cruzados para una selección precisa, página 648
Utilizzare la crosslist dei codici tecnici per una scelta precisa, pag. 648
Gebruik de lijst met verwijzingen naar de technische 648 voor de juiste keuze, op pagina 648
U yj listy kodów technicznych Valeo na stronie 648 dla precyzyjnego doboru
A se folosi paginile crosslist ca sa identifiati referita corecta
Χρησιμοποιήστε την λίστα αντιστοιχίων κωδικών για να κάνετε σωστή και ακριβή επιλογή, σελίδα 648

		CC				OE NEW	Valeo NEW	OE ES	Valeo ES	
OPEL (.../...)										
SINTRA										
2.2 i 16V	E	2198	X22XE	ES	03/96 ▸ 12/99			1854139	**699735**	V5
3.0 i V6 24V	E	2962	X30XE	ES	03/96 ▸ 12/99			1854139	**699735**	V5
2.2 DTi	D	2172	X22DTH	ES	09/97 ▸ 12/99			1854139	**699735**	V5
TIGRA (94>2003)										
1.4 i 16V ▸X4154088	E	1389	X14XE	ES	10/94 ▸ 01/00	1854094	**699072** MQ	1854141	**699572**	V5
1.6 i 16V ▸X4154088	E	1598	X16XE	ES	10/94 ▸ 01/00	1854094	**699072** MQ	1854141	**699572**	V5
TIGRA TWINTOP (2004>)										
1.4 i Twinport 16V	E	1364	Z14XEP	ES	07/04 ▸			6854032	**699912**	SD6V12
1.8 i 16V	E	1796	Z18XE	ES	07/04 ▸	1854111	**699270** MQ	6854024	**699770**	CVC
VECTRA A (88>95)										
1.6 i	E	1598	C16NZ	ES	09/88 ▸ 06/93	1854054	**699070**	1854129	**699570**	V5
1.6 i P9000001 ▸ P9999999	E	1598	C16NZ	ES	01/93 ▸ 12/93			1854126	**699566**	V5
2.0 i, 2.0 i 16V 2000 Turbo 16S, 2000 i 2000 i 16V	E	1998	20NE, 20SEH, 20XE C20LET, C20NE C20XE	ES	09/88 ▸ 09/93	1854054	**699070**	1854129	**699570**	V5
2.0 i, 2.0 i 16V 2000 Turbo 16S, 2000 i 16V P1000001 ▸ P9000001	E	1998	20NE, 20SEH C20LET, C20NE C20XE, X20XEV	ES	01/93 ▸ 12/93			1854126	**699566**	V5
2.0 i, 2.0 i 16V 2000 Turbo 16S, 2000 i 16V	E	1998	20NE, C20LET C20NE, X20XEV	ES	01/94 ▸ 09/95	1854008	**699071**	1854124	**699571**	V5
2.5 i V6 24V P9000001 ▸ P9999999	E	2498	C25XE	ES	01/93 ▸ 12/93			1854126	**699566**	V5
1.7 TD	D	1686	17TD	ES	07/91 ▸ 06/93	1854054	**699070**	1854129	**699570**	V5
1.7 TD P1000001 ▸ P9000001	D	1686	17TD	ES	01/93 ▸ 12/93			1854126	**699566**	V5
VECTRA B (95>99)										
1.6 i, 1.6 i 16V	E	1598	16LZ2, X16SZR X16XEL	ES	10/95 ▸ 01/99	1854144	**699102** MQ		**699602**	V5
1.8 i 16V	E	1799	X18XE	ES	10/95 ▸ 01/99	1854144	**699102** MQ		**699602**	V5
2.0 i, 2.0 i 16V	E	1998	20NEJ, X20XEV	ES	10/95 ▸ 01/99	1854144	**699102** MQ		**699602**	V5
2.5 i V6 24V	E	2498	X25XE-170	ES	10/95 ▸ 01/99	1854148			**699896**	7SB16C
2.0 Di 16V, 2.0 TDi 16V	D	1995	X20DTH, X20DTL	ES	10/96 ▸ 01/99	1854144	**699102** MQ	1854142	**699602**	V5
VECTRA B (99>2002)										
1.6 i 16V	E	1598	Z16XE	ES	02/99 ▸ 06/03	1854144	**699102** MQ	1854142	**699602**	V5
1.8 i 16V	E	1796	Z18XE	ES	02/99 ▸ 06/03	1854144	**699102** MQ		**699602**	V5
2.2 i 16V	E	2198	Z22SE	ES	02/99 ▸ 06/03	1854113	**699307**	6854025	**699807**	PXV16
2.6 i V6 24V	E	2597	Y26SE	ES	09/00 ▸ 06/03	1854148			**699896**	7SB16C
2.0 DTi 16V	D	1995	Y20DTH	ES	02/99 ▸ 06/03	1854144	**699102** MQ		**699602**	V5
2.2 DTI 16V	D	2171	Y22DTR	ES	09/00 ▸ 06/03	1854144	**699102** MQ		**699602**	V5

You must replace the receiver drier with the compressor
Vous devez remplacer la bouteille déshydratante avec le compresseur
Tauschen Sie den Trockner mit dem Kompressor
Es obligatorio cambiar el Filtro Deshidratante con el Compresor
Tem de substituir o filtro desidratante com o compressor
E' necessario cambiare il filtro disidratatore con il compressore
U moet de filterdroger samen met de compressor vervangen
Musisz wymienić filtr osuszacz przy wymianie sprę arki
Рекомендируем замену осушителя вместо с компрессором
Při výměně kompresoru je nutné vyměnit také vysoušeč
Nu untați sa schimbați uscatorul cu compresorul
Kompresörle birlikte nem alıcıyı da değiştirin
Πρέπει να αντικαταστήσετε το φίλτρο υγρού μαζί με το συμπιεστή

		cc				OE NEW	Valeo NEW	OE ES	Valeo ES	

OPEL (.../...)

VECTRA C (2002>2005)

1.6 i 16V	E	1598	Z16XE	ES	04/02 ▸	6854007	**699317**	6854035	**699817**	PXV16
1.8 i 16V	E	1796	Z18XE, Z18XEL-110 Z18XER	ES	04/02 ▸	6854007	**699317**	6854035	**699817**	PXV16
2.0 i Turbo 16V	E	1998	Z20NET	ES	03/03 ▸	6854003	**699318**		**699818**	PXV16
2.2 DIG 16V, 2.2 i 16V	E	2198	Z22SE, Z22YH	ES	04/02 ▸	6854003	**699318**		**699818**	PXV16
3.2 i V6 24V ▸ 48045597	E	3175	Z32SE	ES	06/02 ▸	6854019	**699355**	6854036	**699855**	PXV16
1.9 CDTI 16V	D	1910	Z19DT, Z19DTH	ES	04/04 ▸	6854063	•**699368**	13171593	**699868**	SD7V16
2.0 DTi 16V ▸ 41000251	D	1995	Y20DTH	ES	04/02 ▸ 01/04	6854019	**699355**	6854036	**699855**	PXV16
2.2 DTI 16V ▸ 41000251	D	2171	Y22DTR	ES	04/02 ▸ 01/04	6854019	**699355**	6854036	**699855**	PXV16
3.0 CDTI V6 24V	D	2958	Y30DT	ES	06/03 ▸	6854019	**699355**	6854036	**699855**	PXV16

VECTRA C (2005>)

1.6 i 16V	E	1598	Z16XE	ES	10/05 ▸	6854082			**813682**	SD7V16
1.6 i 16V ▸ 51075527	E	1598	Z16XE	ES	10/05 ▸	6854073	**699318**		**699818**	PXV16
1.8 i 16V	E	1796	Z18XE, Z18XER	ES	10/05 ▸	6854082			**813682**	SD7V16
1.8 i 16V ▸ 51075527	E	1796	Z18XE, Z18XER	ES	10/05 ▸	6854073	**699318**		**699818**	PXV16
2.0 i Turbo 16V	E	1998	Z20NET	ES	10/05 ▸	6854073	**699318**		**699818**	PXV16
2.0 i Turbo 16V	E	1998	Z20NET	ES	10/05 ▸	6854082			**813682**	SD7V16
2.2 DIG 16V	E	2198	Z22YH	ES	10/05 ▸	6854073	**699318**		**699818**	PXV16
2.2 DIG 16V	E	2198	Z22YH	ES	10/05 ▸	6854082			**813682**	SD7V16
2.8 i V6 Turbo	E	2792	Z28NET	ES	10/05 ▸	6854084			**813682**	SD7V16
1.9 CDTI, 1.9 CDTI 16V	D	1910	Z19DT, Z19DTH Z19DTL	ES	10/05 ▸	6854063			•**813688**	V5

ZAFIRA (98>2003)

1.6 i 16V ▸ Y2147297	E	1598	X16XEL, Z16XE Z16XE/D3		01/99 ▸ 01/00	1854096	**699301**			7SBU16C
1.6 i 16V Y2147298 ▸ 12094025	E	1598	X16XEL, Z16XE Z16XE/D3	ES	01/00 ▸ 01/01	1854120			**699769**	7SB16C
1.6 i 16V ▸ 12094026	E	1598	X16XEL, Z16XE Z16XE/D3	ES	01/01 ▸ 06/03	6854000			**699897**	7SBU16C
1.8 i 16V ▸ Y2147297	E	1796	X18XE1, Z18XE		01/99 ▸ 01/00	1854096	**699301**			7SBU16C
1.8 i 16V Y2147298 ▸ 12094025	E	1796	X18XE1, Z18XE	ES	01/00 ▸ 01/01	1854120			**699769**	7SB16C
1.8 i 16V ▸ 12094026	E	1796	X18XE1, Z18XE	ES	01/01 ▸ 06/03	6854000			**699897**	7SBU16C
2.2 i 16V	E	2198	Z22SE	ES	01/99 ▸ 06/03	1854113	**699307**	6854025	**699807**	PXV16
2.0 DT 16V, 2.0 DTI 16V ▸ 12082350	D	1995	X20DTL, Y20DTL	ES	01/01 ▸ 06/05	6854001		6854031	**699824**	7SBU16C
2.0 DTi 16V ▸ 12094026	D	1995	Y20DTH	ES	01/01 ▸ 06/03	6854000			**699897**	7SBU16C

ZAFIRA (2003>2005)

1.6 i GNV	G	1598	Z16YNG	ES	07/03 ▸ 06/05	6854000			**699897**	7SBU16C
1.6 i 16V	E	1598	Z16XE, Z16XE/D4	ES	07/03 ▸ 06/05	6854000			**699897**	7SBU16C
1.8 i 16V	E	1796	Z18XE	ES	07/03 ▸ 06/05	6854000			**699897**	7SBU16C
2.2 i 16V	E	2198	Z22SE	ES	07/03 ▸ 06/05	1854113	**699307**	6854025	**699807**	PXV16
2.2 DTI 16V	D	2171	Y22DTR	ES	07/03 ▸ 06/05	6854001		6854031	**699824**	7SBU16C

ZAFIRA II (2005>)

1.6 GNV 16V	F	1598	Z16YNG	ES	01/06 ▸ 07/08	6854058			**813600**	CVC

• **New** Nouveau **Neu** Nuevo **Novo** Nuovo **Nieuw** Nowi **Новый** Novy **Nou** Yeni **Νέους**

Valeo Matching Quality Valeo gleichwertige Qualität **Valeo Calidad Equivalente** Część Valeo o Jakości Porównywalnej z Oryginałem

Use technical code cross-list for precise selection page 648
Utiliser les pages Cross-List (page 648) pour identifier la bonne référence
Verwenden Sie die Code-Vergleichsliste zur gezielten Suche des adäquaten Bauteils, Seite 648
Utilizar la lista de códigos cruzados para una selección precisa, página 648
Utilizzare la crosslist dei codici tecnici per una scelta precisa, pag. 648
Gebruik de lijst met verwijzingen naar de technische 648 voor de juiste keuze, op pagina 648
U yj listy kodów technicznych Valeo na stronie 648 dla precyzyjnego doboru
A se folosi paginile crosslist ca sa identifiati referita corecta
Χρησιμοποιήστε την λίστα αντιστοιχίων κωδικών για να κάνετε σωστή και ακριβή επιλογή, σελίδα 648

					OE NEW	Valeo NEW	OE ES	Valeo ES	
OPEL (.../...)									
ZAFIRA II (2005>) (.../...)									
2.0 i Turbo 16V	E	1998	Z20LEH, Z20LER	07/05 ▸	6854060			**813605**	CVC
2.2 i 16V	E	2198	Z22YH	07/05 ▸	6854078			**813603**	CVC
1.9 CDTI, 1.9 CDTI 16V	D	1910	Z19DT, Z19DTH Z19DTL	07/05 ▸	6854065		6854098	**813602**	CVC
OPEL									
CAMPO (88>96)									
2.2 D	D	2238	C233	04/93 ▸ 06/96			1854133	**699768**	7SB16C
2.5 D, 2.5 TD	D	2499	25D, 25TD	04/93 ▸ 06/96			1854133	**699768**	7SB16C
3.1 TD	D	3059	C4JG	04/93 ▸ 06/96			1854133	**699768**	7SB16C
COMBO (93>2001)									
1.4 i ▸ W4098342	E	1389	C14NZ, C14SE X14SZ	03/93 ▸ 01/98	1854094	**699072** MQ	1854141	**699572**	V5
COMBO TOUR (2002>)									
1.4 i Twinport 16V	E	1364	Z14XEP	07/04 ▸			6854032	**699912**	SD6V12
1.6 i	E	1598	Z16SE/E4	04/02 ▸ 06/04	1854111	**699270** MQ	6854024	**699770**	CVC
1.7 CDTI 16V, 1.7 DI 16V	D	1686	Y17DTL, Z17DTH	04/02 ▸	1854147	**699306** MQ	6854048	**699806**	SD6V12
PEUGEOT									
106 (91>96)									
1.0 i	E	954	TU9M	06/92 ▸ 03/96	6453N1		6453GC	**699526**	SD7V12
1.1 i	E	1124	TU1M	09/91 ▸ 03/96	6453N1		6453GC	**699526**	SD7V12
1.3 i	E	1294	TU2J2	06/93 ▸ 03/96	6453N1		6453GC	**699526**	SD7V12
1.4, 1.4 i	E	1360	TU3, TU3.2 TU3FJ2, TU3FMC TU3J2, TU3M	09/91 ▸ 03/96	6453N1		6453GC	**699526**	SD7V12
1.6 i	E	1587	TU5J2, TU5JP	06/93 ▸ 03/96	6453N1		6453GC	**699526**	SD7V12
1.4 D	D	1360	TUD3	06/92 ▸ 03/96	6453N1		6453GC	**699526**	SD7V12
1.5 D	D	1527	TUD5	07/94 ▸ 03/96	6453N1		6453GC	**699526**	SD7V12
106 (96>2003)									
1.0 i	E	954	TU9M	03/96 ▸ 09/00	6453N1		6453GC	**699526**	SD7V12
1.0 i	E	954	TU9M	09/00 ▸ 07/03	6453FS	**699237** MQ	6453JK	**699737**	SD6V12
1.1, 1.1 i, 1.1 i GPL	E	1124	TU1JP, TU1M+ TU1TR	03/96 ▸ 09/00	6453N1		6453GC	**699526**	SD7V12
1.1, 1.1 i, 1.1 i GPL	E	1124	TU1JP, TU1M+ TU1TR	09/00 ▸ 07/03	6453FS	**699237** MQ	6453JK	**699737**	SD6V12
1.4, 1.4 i	E	1360	TU3.2, TU3JP	03/96 ▸ 09/00	6453N1		6453GC	**699526**	SD7V12
1.4, 1.4 i	E	1360	TU3.2, TU3JP	09/00 ▸ 07/03	6453FS	**699237** MQ	6453JK	**699737**	SD6V12
1.6 i, 1.6 i 16V	E	1587	TU5J2, TU5J4 TU5JP	03/96 ▸ 09/00	6453N1		6453GC	**699526**	SD7V12
1.6 i, 1.6 i 16V	E	1587	TU5J2, TU5J4 TU5JP	09/00 ▸ 07/03	6453FS	**699237** MQ	6453JK	**699737**	SD6V12
1.5 D	D	1527	TUD5, TUD5B	03/96 ▸ 09/00	6453N1		6453GC	**699526**	SD7V12
1.5 D	D	1527	TUD5, TUD5B	09/00 ▸ 07/03	6453FS	**699237** MQ	6453JK	**699737**	SD6V12
107									
1.0 i 12V	E	998	384F	06/05 ▸	6453RJ	**699393**		**699893**	DKV06R

You must replace the receiver drier with the compressor
Vous devez remplacer la bouteille déshydratante avec le compresseur
Tauschen Sie den Trockner mit dem Kompressor
Es obligatorio cambiar el Filtro Deshidratante con el Compresor
Tem de substituir o filtro desidratante com o compressor
E' necessario cambiare il filtro disidratatore con il compressore
U moet de filterdroger samen met de compressor vervangen
Musisz wymienić filtr osuszacz przy wymianie sprę arki
Рекомендируем замену осушителя вместо с компрессором
Při výměně kompresoru je nutné vyměnit také vysoušeč
Nu untați sa schimbați uscatorul cu compresorul
Kompresörle birlikte nem alıcıyı da değiştirin
Πρέπει να αντικαταστήσετε το φίλτρο υγρού μαζί με το συμπεστή

		cc				OE NEW	Valeo NEW	OE ES	Valeo ES	
PEUGEOT (.../...)										
107 (.../...)										
1.4 HDi	D	1398	DV4TD		06/05 ▸	6453RK	**699392**			DKV06R
1007										
1.4 i,1.4 i 16V	E	1360	ET3J4,TU3A,TU3JP	ES	04/05 ▸			6453QH	**813809**	SD6V12
1.4 i,1.4 i 16V	E	1360	ET3J4,TU3A,TU3JP	ES	04/05 ▸	6453QG	**•813317**	6453XK	**813817**	SD7V12
1.6 i 16V	E	1587	TU5JP4	ES	04/05 ▸			6453QH	**813809**	SD6V12
1.6 i 16V	E	1587	TU5JP4	ES	04/05 ▸	648722	**•813317**	6453XK	**813817**	SD7V12
1.4 HDi	D	1398	DV4TD	ES	04/05 ▸			6453QH	**813809**	SD6V12
1.4 HDi	D	1398	DV4TD	ES	04/05 ▸	6453QG	**•813317**	6453XK	**813817**	SD7V12
1.6 HDi 16V	D	1560	DV6TED4	ES	02/07 ▸			6453QH	**813809**	SD6V12
1.6 HDi 16V	D	1560	DV6TED4	ES	02/07 ▸	6453QG	**•813317**	6453XK	**813817**	SD7V12
205										
1.6, 1.6 i	E	1580	XU51C, XU52C XU5J1/A, XU5M	ES	08/87 ▸ 09/98	6453GK			**699523**	SD7H15
1.7 D, 1.7 TD	D	1769	XUD7, XUD7T	ES	08/87 ▸ 09/98	6453GK			**699523**	SD7H15
1.9 D	D	1905	XUD9	ES	08/89 ▸ 09/98	6453GK			**699523**	SD7H15
206										
1.1 i	E	1124	TU1JP	ES	09/98 ▸	6453LF	**813189** ⊃MQ	6453LH	**813689**	SD6V12
1.1 i ▸9456	E	1124	TU1JP	ES	09/98 ▸ 09/02	6453CN	**699190** ⊃MQ	6453JG	**699690**	SD6V12
1.4 i	E	1360	TU3JP	ES	09/98 ▸	6453LF	**813189** ⊃MQ	6453LH	**813689**	SD6V12
1.4 i ▸9456	E	1360	TU3JP	ES	09/98 ▸ 09/02	6453CN	**699190** ⊃MQ	6453JG	**699690**	SD6V12
1.4 i 16V 10046 ▸	E	1360	ET3J4	ES	05/04 ▸ 09/05	648714	**•813317**	6453XK	**813817**	SD7V12
1.6 i, 1.6 i 16V	E	1587	TU5JP, TU5JP4	ES	09/98 ▸	6453LF	**813189** ⊃MQ	6453LH	**813689**	SD6V12
1.6 i, 1.6 i 16V ▸9456	E	1587	TU5JP, TU5JP4	ES	09/98 ▸ 09/02	6453CN	**699190** ⊃MQ	6453JG	**699690**	SD6V12
1.6 i 16V 11193 ▸	E	1587	TU5JP4	ES	05/04 ▸ 02/09	648714	**•813317**	6453XK	**813817**	SD7V12
1.6 i 16V 11193 ▸	E	1587	TU5JP4	ES	07/07 ▸ 02/09			6453XQ	**813818**	SD7V12
1.6 i 16V 10046 ▸	E	1587	TU5JP4	ES	02/01 ▸ 02/09			6453QF	**813824**	SD7V12
2.0 i 16V ▸8700	E	1997	EW10J4	ES	04/99 ▸ 09/00	6453CL	**699199**		**699699**	SD7V16
2.0 i 16V 8701 ▸9456	E	1997	EW10J4	ES	09/00 ▸ 09/02	6453EN	**699216**	6453JH	**699716**	SD6V12
2.0 i 16V	E	1997	EW10J4	ES	09/02 ▸	6453LF	**813189** ⊃MQ	6453LH	**813689**	SD6V12
2.0 i 16V 10046 ▸	E	1997	EW10J4,EW10J4S	ES	10/00 ▸ 02/09			6453QE	**813824**	SD7V12
2.0 i 16V 10046 ▸	E	1997	EW10J4S	ES	05/04 ▸ 02/09	648714	**•813317**	6453XK	**813817**	SD7V12
1.4 HDi	D	1398	DV4TD	ES	03/02 ▸	6453LF	**813189** ⊃MQ	6453LH	**813689**	SD6V12
1.4 HDi ▸11192	D	1398	DV4TD	ES	10/05 ▸ 07/07			6453QF	**813824**	SD7V12
1.4 HDi	D	1398	DV4TD	ES	10/05 ▸ 2010	648714	**•813317**	6453XK	**813817**	SD7V12
1.6 HDi 16V 11193 ▸	D	1560	DV6TED4	ES	04/04 ▸ 02/09			6453XQ	**813818**	SD7V12
1.6 HDi 16V ▸11192	D	1560	DV6TED4	ES	04/04 ▸ 07/07			6453QE	**813824**	SD7V12

• **New** Nouveau **Neu** Nuevo **Novo** Nuovo **Nieuw** Nowi **Новый** Nowy **Nou** Yeni **Νέους**

⊃MQ : **Valeo Matching Quality** Valeo gleichwertige Qualität **Valeo Calidad Equivalente**
Część Valeo o Jakości Porównywalnej z Oryginałem

Use technical code cross-list for precise selection page 648
Utiliser les pages Cross-List (page 648) pour identifier la bonne référence
Verwenden Sie die Code-Vergleichsliste zur gezielten Suche des adäquaten Bauteils, Seite 648
Utilizar la lista de códigos cruzados para una selección precisa, página 648
Utilizzare la crosslist dei codici tecnici per una scelta precisa, pag. 648
Gebruik de lijst met verwijzingen naar de technische 648 voor de juiste keuze, op pagina 648
U yj listy kodów technicznych Valeo na stronie 648 dla precyzyjnego doboru
A se folosi paginile crosslist ca sa identifiati referita corecta
Χρησιμοποιήστε την λίστα αντιστοιχίων κωδικών για να κάνετε σωστή και ακριβή επιλογή, σελίδα 648

		CC				OE NEW	Valeo NEW	OE ES	Valeo ES	
PEUGEOT (.../...)										
206 (.../...)										
1.6 HDi 16V 11193 ▸	D	1560	DV6TED4	ES	04/04 ▸ 02/09	648714	•**813317**	6453XK	**813817**	SD7V12
1.9 D ▸ 9337	D	1868	DW8, DW8B	ES	09/98 ▸ 06/02	6453TJ	**699236** MQ	6453GA	**699736**	SD7V16
1.9 D 9338 ▸	D	1868	DW8, DW8B	ES	06/02 ▸	6453KW	**699358**		**699858**	SD6V12
2.0 HDi ▸ 9337	D	1997	DW10TD	ES	09/99 ▸ 06/02	6453TJ	**699236** MQ	6453GA	**699736**	SD7V16
2.0 HDi 9338 ▸	D	1997	DW10TD	ES	06/02 ▸	6453KW	**699358**		**699858**	SD6V12
206 CC										
1.6 i 16V	E	1587	TU5JP4	ES	02/01 ▸	6453LF	**813189** MQ	6453LH	**813689**	SD6V12
2.0 i 16V	E	1997	EW10J4	ES	10/00 ▸	6453CL	**699199**		**699699**	SD7V16
2.0 i 16V 8701 ▸ 9456	E	1997	EW10J4	ES	10/00 ▸ 09/02	6453EN	**699216**	6453JH	**699716**	SD6V12
2.0 i 16V	E	1997	EW10J4	ES	09/02 ▸	6453LF	**813189** MQ	6453LH	**813689**	SD6V12
206 SW										
1.1 i	E	1124	TU1JP	ES	09/02 ▸	6453LF	**813189** MQ	6453LH	**813689**	SD6V12
1.4 i	E	1360	TU3JP	ES	09/02 ▸	6453LF	**813189** MQ	6453LH	**813689**	SD6V12
1.6 i 16V	E	1587	TU5JP4	ES	09/02 ▸	6453LF	**813189** MQ	6453LH	**813689**	SD6V12
2.0 i 16V 8701 ▸ 9456	E	1997	EW10J4	ES	05/02 ▸ 09/02	6453EN	**699216**	6453JH	**699716**	SD6V12
2.0 i 16V	E	1997	EW10J4	ES	09/02 ▸	6453LF	**813189** MQ	6453LH	**813689**	SD6V12
2.0 HDi ▸ 09337	D	1997	DW10TD	ES	05/02 ▸ 06/02	6453TJ	**699236** MQ	6453GA	**699736**	SD7V16
2.0 HDi 09338 ▸	D	1997	DW10TD	ES	06/02 ▸	6453KW	**699358**		**699858**	SD6V12
206+ (2009>)										
1.1 i	E	1124	TU1A	ES	03/09 ▸ 02/10			6453XQ	**813818**	SD7V12
1.1 i	E	1124	TU1A,TU1AE5	ES	03/09 ▸	648714	•**813317**	6453XK	**813817**	SD7V12
1.4 i	E	1360	TU3A	ES	03/09 ▸ 02/10			6453XQ	**813818**	SD7V12
1.4 i	E	1360	TU3A,TU3AE5	ES	03/09 ▸	648714	•**813317**	6453XK	**813817**	SD7V12
1.4 HDi	D	1398	DV4C,DV4TD	ES	03/09 ▸	648714	•**813317**	6453XK	**813817**	SD7V12
207										
1.4 e, 1.4 e 16V	E	1360	ET3J4,TU3A		03/06 ▸	6453WK	**813162**			SD7C16
1.4 e,1.4 e 16V	E	1360	ET3J4,TU3A,TU3AE5	ES	03/06 ▸	648708	•**813223**	6453WL	**813723**	SD6C12
1.4 VTi 16V	E	1397	EP3		07/07 ▸	6453WK	**813162**			SD7C16
1.4 VTi 16V	E	1397	EP3,EP3C	ES	07/07 ▸	648708	•**813223**	6453WL	**813723**	SD6C12
1.6 e 16V	E	1587	TU5JP4		03/06 ▸	6453WK	**813162**			SD7C16
1.6 e 16V	E	1587	TU5JP4	ES	03/06 ▸ 06/07	6453QK	•**813223**	6453WL	**813723**	SD6C12
1.6 THP 16V, 1.6 VTi 16V 1.6 e 16V	E	1598	EP6, EP6DT EP6DTS		12/06 ▸	6453WK	**813162**			SD7C16
1.6 THP 16V,1.6 VTi 16V 1.6 e 16V	E	1598	EP6,EP6C,EP6DT EP6DTS	ES	12/06 ▸	6453QK	•**813223**	6453WL	**813723**	SD6C12
1.4 HDi	D	1398	DV4TD		03/06 ▸	6453WK	**813162**			SD7C16
1.4 HDi,1.4 HDi 68	D	1398	DV4C,DV4TD	ES	03/06 ▸	648708	•**813223**	6453WL	**813723**	SD6C12
1.6 HDi 16V	D	1560	DV6ATED4,DV6TED4		03/06 ▸	6453WK	**813162**			SD7C16

You must replace the receiver drier with the compressor
Vous devez remplacer la bouteille déshydratante avec le compresseur
Tauschen Sie den Trockner mit dem Kompressor
Es obligatorio cambiar el Filtro Deshidratante con el Compresor
Tem de substituir o filtro desidratante com o compressor
E' necessario cambiare il filtro disidratatore con il compressore
U moet de filterdroger samen met de compressor vervangen

Musisz wymienić filtr osuszacz przy wymianie sprę arki
Рекомендируем замену осушителя вместо с компрессором
Při výměně kompresoru je nutné vyměnit také vysoušeč
Nu uitați sa schimbați uscatorul cu compresorul
Kompresörle birlikte nem alıcıyı da değiştirin
Πρέπει να αντικαταστήσετε το φίλτρο υγρού μαζί με το συμπιεστή

		cc				OE NEW	Valeo NEW	OE ES	Valeo ES	
PEUGEOT (.../...)										
207 (.../...)										
1.6 HDi,1.6 HDi 16V	D	1560	DV6ATED4,DV6C DV6DTED,DV6TED4 DV6TED4B	ES	03/06 ▸	648708	•**813223**	6453WL	**813723**	SD6C12
208										
1.4 Hdi	D	1398	DV4C	ES	03/12 ▸			648709	•**813749**	SD6C12
306 (93>97)										
1.1 i	E	1124	TU1M, TU1M+	ES	02/93 ▸ 02/97	6453N1		6453GC	**699526**	SD7V12
1.4	E	1360	TU3, TU3.2	ES	02/93 ▸ 02/97			6453GN	**699522**	SD7H13
1.4 i	E	1360	TU3JP, TU3MC	ES	02/93 ▸ 02/97	6453N1		6453GC	**699526**	SD7V12
1.6 i	E	1587	TU5JP	ES	02/93 ▸ 02/97	6453N1		6453GC	**699526**	SD7V12
1.8 i	E	1761	XU7JP	ES	02/93 ▸ 02/97	6453TJ	**699236** ⊃MQ	6453GA	**699736**	SD7V16
2.0 i, 2.0 i 16V	E	1998	XU10J2, XU10J2C XU10J4 XU10J4R/S	ES	06/93 ▸ 02/97	6453TJ	**699236** ⊃MQ	6453GA	**699736**	SD7V16
1.8 D	D	1769	XUD7	ES	06/93 ▸ 02/97	6453TJ	**699236** ⊃MQ	6453GA	**699736**	SD7V16
1.9 D, 1.9 TD	D	1905	XUD9, XUD9A XUD9TE	ES	06/93 ▸ 02/97	6453TJ	**699236** ⊃MQ	6453GA	**699736**	SD7V16
306 (97>)										
1.4, 1.4 i, 1.4 i GPL ▸ 8700	E	1360	TU3.2, TU3JP	ES	03/97 ▸ 09/00	6453N1		6453GC	**699526**	SD7V12
1.6 i ▸ 8700	E	1587	TU5JP, TU5JP+	ES	03/97 ▸ 09/00	6453N1		6453GC	**699526**	SD7V12
1.8 i, 1.8 i 16V 1.8 i GPL 16V	E	1761	XU7JP, XU7JP4	ES	03/97 ▸ 09/02	6453TJ	**699236** ⊃MQ	6453GA	**699736**	SD7V16
2.0 i 16V	E	1998	XU10J4R, XU10J4RS	ES	03/97 ▸ 09/02	6453TJ	**699236** ⊃MQ	6453GA	**699736**	SD7V16
1.8 D	D	1769	XUD7	ES	03/97 ▸ 02/02	6453TJ	**699236** ⊃MQ	6453GA	**699736**	SD7V16
1.9 D	D	1868	DW8, DW8B	ES	11/98 ▸ 03/02	6453TJ	**699236** ⊃MQ	6453GA	**699736**	SD7V16
1.9 D, 1.9 SD, 1.9 TD	D	1905	XUD9A, XUD9BSD XUD9TE	ES	03/97 ▸ 03/02	6453TJ	**699236** ⊃MQ	6453GA	**699736**	SD7V16
2.0 HDi	D	1997	DW10TD	ES	03/99 ▸ 03/02	6453TJ	**699236** ⊃MQ	6453GA	**699736**	SD7V16
307 (2001>2005)										
1.4 i, 1.4 i 16V	E	1360	ET3J4, TU3JP	ES	09/01 ▸ 06/05	6453LF	**813189** ⊃MQ	6453LH	**813689**	SD6V12
1.4 i,1.4 i 16V ▸ 10046	E	1360	ET3J4,TU3JP	ES	05/04 ▸ 06/05			6453QE	**813824**	SD7V12
1.4 i	E	1360	TU3JP	ES	09/01 ▸ 06/05			6453JP	**699738**	SD6V12
1.4 i,1.4 i 16V ▸ 10046	E	1360	ET3J4,TU3JP	ES	05/04 ▸ 06/05	648714	•**813317**	6453XK	**813817**	SD7V12
1.6 i, 1.6 i 16V	E	1587	TU5JP4	ES	03/01 ▸ 06/05	6453LF	**813189** ⊃MQ	6453LH	**813689**	SD6V12
1.6 i,1.6 i 16V ▸ 10046	E	1587	TU5JP4	ES	05/04 ▸ 06/05			6453QE	**813824**	SD7V12
1.6 i 16V	E	1587	TU5JP4	ES	03/01 ▸ 06/05			6453JP	**699738**	SD6V12
1.6 i,1.6 i 16V ▸ 10046	E	1587	TU5JP4	ES	05/04 ▸ 06/05	648714	•**813317**	6453XK	**813817**	SD7V12
2.0 i 16V	E	1997	EW10J4, EW10J4S	ES	03/01 ▸ 06/05	6453LF	**813189** ⊃MQ	6453LH	**813689**	SD6V12

• **New** Nouveau **Neu** Nuevo **Novo** Nuovo **Nieuw** Nowi **Новый** Novy **Nou** Yeni **Νέους**

⊃MQ : **Valeo Matching Quality** Valeo gleichwertige Qualität **Valeo Calidad Equivalente**
Część Valeo o Jakości Porównywalnej z Oryginałem

Use technical code cross-list for precise selection page 648
Utiliser les pages Cross-List (page 648) pour identifier la bonne référence
Verwenden Sie die Code-Vergleichsliste zur gezielten Suche des adäquaten Bauteils, Seite 648
Utilizar la lista de códigos cruzados para una selección precisa, página 648
Utilizzare la crosslist dei codici tecnici per una scelta precisa, pag. 648
Gebruik de lijst met verwijzingen naar de technische 648 voor de juiste keuze, op pagina 648
U yj listy kodów technicznych Valeo na stronie 648 dla precyzyjnego doboru
A se folosi paginile crosslist ca sa identifiati referita corecta
Χρησιμοποιήστε την λίστα αντιστοιχίων κωδικών για να κάνετε σωστή και ακριβή επιλογή, σελίδα 648

						OE NEW	Valeo NEW	OE ES	Valeo ES	
		cc								
PEUGEOT (.../...)										
307 (2001>2005) (.../...)										
2.0 i 16V	E	1997	EW10A, EW10J4	ES	01/05 ▸ 06/05	6453QL	**813162**	6453QN	**813662**	SD7C16
2.0 i 16V 10046 ▸ 10366	E	1997	EW10A,EW10J4 EW10J4S	ES	05/04 ▸ 06/05			6453QE	**813824**	SD7V12
2.0 i 16V	E	1997	EW10J4S	ES	09/03 ▸ 06/05	648708	•**813223**	6453WL	**813723**	SD6C12
2.0 i 16V	E	1997	EW10J4	ES	03/01 ▸ 06/05			6453JP	**699738**	SD6V12
2.0 i 16V 10046 ▸ 10366	E	1997	EW10J4,EW10J4S	ES	05/04 ▸ 06/05	648714	•**813317**	6453XK	**813817**	SD7V12
1.4 HDi	D	1398	DV4TD	ES	05/02 ▸ 06/05	6453QL	**813162**	6453QN	**813662**	SD7C16
1.4 HDi	D	1398	DV4TD	ES	02/02 ▸ 06/05	648708	•**813223**	6453WL	**813723**	SD6C12
1.4 HDi 10046 ▸	D	1398	DV4TD	ES	05/04 ▸ 06/05			6453QF	**813824**	SD7V12
1.4 HDi 10046 ▸ 10366	D	1398	DV4TD	ES	05/04 ▸ 03/05	648714	•**813317**	6453XK	**813817**	SD7V12
1.4 HDi	D	1399	DV4TD	ES	02/02 ▸ 06/05	6453LF	**813189** MQ	6453LH	**813689**	SD6V12
1.4 HDi	D	1399	DV4TD	ES	01/05 ▸ 06/05	6453QL	**813162**	6453QN	**813662**	SD7C16
1.6 HDi, 1.6 HDi 16V	D	1560	DV6ATED4, DV6TED4	ES	07/04 ▸ 06/05	6453QL	**813162**	6453QN	**813662**	SD7C16
1.6 HDi,1.6 HDi 16V ▸ 10366	D	1560	DV6ATED4,DV6TED4	ES	07/04 ▸ 06/05			6453QF	**813824**	SD7V12
1.6 HDi,1.6 HDi 16V	D	1560	DV6ATED4,DV6TED4	ES	07/04 ▸ 06/05	6453QJ	•**813223**	6453WL	**813723**	SD6C12
1.6 HDi,1.6 HDi 16V ▸ 10366	D	1560	DV6ATED4,DV6TED4	ES	07/04 ▸ 06/05	648714	•**813317**	6453XK	**813817**	SD7V12
2.0 HDi 9156 ▸	D	1997	DW10ATED, DW10TD	ES	06/01 ▸ 06/05	6453TE	**699272** MQ	6453LR	**699772**	SD7V16
2.0 HDi 9338 ▸	D	1997	DW10ATED, DW10TD	ES	06/02 ▸ 06/05	6453KW	**699358**		**699858**	SD6V12
2.0 HDi 16V	D	1997	DW10BTED4	ES	04/04 ▸ 06/05	6453PE			**699859**	SD6V12
2.0 HDi 16V	D	1997	DW10BTED4		06/05 ▸ 06/05	6453RV	**813161**			SD7C16
2.0 HDi 16V	D	1997	DW10BTED4		06/05 ▸ 06/05	6453QP	**813164**			SD6C12
307 (2005>)										
1.4 i 16V	E	1360	ET3J4	ES	06/05 ▸	6453QJ	•**813223**	6453WL	**813723**	SD6C12
1.6 i 16V	F	1587	TU5JP4	ES	07/07 ▸	6453QK	•**813223**	6453WL	**813723**	SD6C12
1.6 i 16V	E	1587	TU5JP4	ES	06/05 ▸	648708	•**813223**	6453WL	**813723**	SD6C12
2.0 i 16V	E	1997	EW10A,EW10J4S	ES	06/05 ▸	648708	•**813223**	6453WL	**813723**	SD6C12
2.0 i 16V	E	1997	EW10A	ES	06/05 ▸	6453QL	**813162**	6453QN	**813662**	SD7C16
1.6 HDi 16V	D	1560	DV6ATED4,DV6TED4	ES	06/05 ▸	6453QL	**813162**	6453QN	**813662**	SD7C16
1.6 HDi 16V	D	1560	DV6ATED4,DV6TED4	ES	06/05 ▸	6453QK	•**813223**	6453WL	**813723**	SD6C12
2.0 HDi 16V	D	1997	DW10BTED4	ES	06/05 ▸			6453RW	**813714**	SD7C16
2.0 HDi 16V	D	1997	DW10BTED4	ES	06/05 ▸	6453QP	**813164**	6453QQ	**813664**	SD6C12
308										
1.6i 16V	F	1587	TU5JP4	ES	04/10 ▸	648708	•**813223**	6453WL	**813723**	SD6C12
1.6 THP 16V,1.6 VTi 16V	E	1598	EP6C,EP6CDT,EP6DT	ES	03/09 ▸	648708	•**813223**	6453WL	**813723**	SD6C12
1.4 16V	D	1397	EP3		09/07 ▸	6453WK	**813162**			SD7C16
1.6 HDi 16V, 1.6 16V	D	1560	DV6ATED4,DV6TED4 DV6TED4B		09/07 ▸	6453WK	**813162**			SD7C16
1.6 HDi,1.6 HDi 16V	D	1560	DV6ATED4,DV6C DV6DTED,DV6TED4 DV6TED4B	ES	09/07 ▸	648708	•**813223**	6453WL	**813723**	SD6C12
2.0 HDi 163 16V,2.0 HDi 16V	D	1997	DW10BTED4 DW10CTED4	ES	03/09 ▸	648708	•**813223**	6453WL	**813723**	SD6C12
308 SW										
1.4 16V	D	1397	EP3		09/07 ▸	6453WK	**813162**			SD7C16
1.6 16V	D	1560	DV6TED4		09/07 ▸	6453WK	**813162**			SD7C16

You must replace the receiver drier with the compressor
Vous devez remplacer la bouteille déshydratante avec le compresseur
Tauschen Sie den Trockner mit dem Kompressor
Es obligatorio cambiar el Filtro Deshidratante con el Compresor
Tem de substituir o filtro desidratante com o compressor
E' necessario cambiare il filtro disidratatore con il compressore
U moet de filterdroger samen met de compressor vervangen
Musisz wymienić filtr osuszacz przy wymianie sprę arki
Рекомендируем замену осушителя вместо с компрессором
Při výměně kompresoru je nutné vyměnit také vysoušeč
Nu untați sa schimbați uscatorul cu compresorul
Kompresörle birlikte nem alıcıyı da değiştirin
Πρέπει να αντικαταστήσετε το φίλτρο υγρού μαζί με το συμπεστή

		cc				OE NEW	Valeo NEW	OE ES	Valeo ES	
PEUGEOT (.../...)										
3008										
1.6 HDi 16V	D	1560	DV6TED4	ES	09/09 ▸	6453ZA	**813162**	6453QN	**813662**	SD7C16
405 (87>92)										
1.4	E	1360	TU3, TU3.2, TU3/A TU3A	ES	06/87 ▸ 06/92	6453K4		6453GG	**699524**	SD709
1.4	E	1360	TU3, TU3.2, TU3/A TU3A	ES	06/87 ▸ 06/92			6453FZ	**699518**	SD709
1.6, 1.6 i	E	1580	XU51C, XU52C XU5CP, XU5M	ES	06/87 ▸ 06/92	6453K4		6453GG	**699524**	SD709
1.6, 1.6 i	E	1580	XU51C, XU52C XU5CP, XU5M	ES	06/87 ▸ 06/92			6453FZ	**699518**	SD709
1.9, 1.9 i	E	1905	XU92C, XU9J1/A XU9J2/4, XU9JAZ XU9M	ES	06/87 ▸ 06/92			6453FZ	**699518**	SD709
1.9, 1.9 i	E	1905	XU92C, XU9J1 XU9J1A, XU9J2 XU9JAZ, XU9M	ES	06/87 ▸ 06/92	6453K4		6453GG	**699524**	SD709
1.7 D, 1.7 TD	D	1769	XUD7, XUD7TE	ES	06/87 ▸ 06/92	6453K4		6453GG	**699524**	SD709
1.7 D, 1.7 TD	D	1769	XUD7, XUD7TE	ES	06/87 ▸ 06/92			6453FZ	**699518**	SD709
1.9 D	D	1905	XUD9A	ES	06/87 ▸ 06/92	6453K4		6453GG	**699524**	SD709
1.9 D	D	1905	XUD9A	ES	06/87 ▸ 06/92			6453FZ	**699518**	SD709
405 (92>96)										
1.6 i	E	1580	XU5JP	ES	07/92 ▸ 10/96	6453P9		6453GE	**699520**	SD7H15
1.6 i	E	1580	XU5JP	ES	07/92 ▸ 10/96	6453K4		6453GG	**699524**	SD709
1.8 i	E	1761	XU7JP, XU7JPPR	ES	07/92 ▸ 10/96	6453K4		6453GG	**699524**	SD709
1.8 i	E	1761	XU7JP, XU7JPPR	ES	07/92 ▸ 10/96	6453P9		6453GE	**699520**	SD7H15
2.0 i, 2.0 i Turbo 16S	E	1998	XU10J2, XU10J2C XU10J4, XU10J4TE	ES	07/92 ▸ 10/96	6453K4		6453GG	**699524**	SD709
2.0 i, 2.0 i Turbo 16S	E	1998	XU10J2, XU10J2C XU10J4, XU10J4TE	ES	07/92 ▸ 10/96	6453P9		6453GE	**699520**	SD7H15
1.7 TD	D	1769	XUD7TE	ES	01/94 ▸ 10/95	6453K4		6453GG	**699524**	SD709
1.7 TD	D	1769	XUD7TE	ES	01/94 ▸ 10/95	6453P9		6453GE	**699520**	SD7H15
1.9 D, 1.9 TD	D	1905	XUD9A, XUD9TE	ES	07/92 ▸ 10/96	6453K4		6453GG	**699524**	SD709
1.9 D, 1.9 TD	D	1905	XUD9A, XUD9TE	ES	07/92 ▸ 10/96	6453P9		6453GE	**699520**	SD7H15
406 (95>99)										
1.6 i	E	1580	XU5JP	ES	10/95 ▸ 03/99	6453TJ	**699236** ⊃MQ	6453GA	**699736**	SD7V16
1.8 i, 1.8 i 16V 1.8 i GPL 16V	E	1761	XU7JB, XU7JP XU7JP4	ES	10/95 ▸ 04/99	6453TJ	**699236** ⊃MQ	6453GA	**699736**	SD7V16
2.0 i 16V	E	1997	EW10J4	ES	05/99 ▸ 04/03	6453CL	**699199**		**699699**	SD7V16
2.0 i 16V, 2.0 i Turbo	E	1998	XU10J2TE, XU10J4R	ES	10/95 ▸ 04/99	6453TJ	**699236** ⊃MQ	6453GA	**699736**	SD7V16
3.0 i V6 24V	E	2946	ES9J4, ES9J4S	ES	05/97 ▸ 06/02	6453AX		6453GP	**699606**	SD7V16
3.0 i V6 24V	E	2946	ES9J4S	ES	01/00 ▸ 10/04			6453NJ	**813804**	SD7V16
1.9 TD	D	1905	XUD9BSD, XUD9BTF XUD9SD, XUD9TE	ES	11/95 ▸ 03/99	6453TJ	**699236** ⊃MQ	6453GA	**699736**	SD7V16
1.9 TD 7539 ▸	D	1905	XUD9BSD, XUD9BTF XUD9SD, XUD9TE	ES	03/97 ▸ 03/99	6453AQ	**699155**	6453GF	**699655**	V5
2.0 HDi	D	1997	DW10ATED	ES	10/98 ▸ 03/99	6453AQ	**699155**	6453GF	**699655**	V5
2.1 TD	D	2088	XUD11BTE	ES	11/95 ▸ 03/99	6453AQ	**699155**	6453GF	**699655**	V5
2.1 TD	D	2088	XUD11BTE	ES	11/95 ▸ 03/99	6453TJ	**699236** ⊃MQ	6453GA	**699736**	SD7V16
406 (99>)										
1.6 i	E	1580	XU5JP	ES	04/99 ▸ 03/04	6453TJ	**699236** ⊃MQ	6453GA	**699736**	SD7V16

• **New** Nouveau **Neu** Nuevo **Novo** Nuovo **Nieuw** Nowi **Новый** Nový **Nou** Yeni **Νέους**

⊃MQ : **Valeo Matching Quality** Valeo gleichwertige Qualität **Valeo Calidad Equivalente**
Część Valeo o Jakości Porównywalnej z Oryginałem

Use technical code cross-list for precise selection page 648
Utiliser les pages Cross-List (page 648) pour identifier la bonne référence
Verwenden Sie die Code-Vergleichsliste zur gezielten Suche des adäquaten Bauteils, Seite 648
Utilizar la lista de códigos cruzados para una selección precisa, página 648
Utilizzare la crosslist dei codici tecnici per una scelta precisa, pag. 648
Gebruik de lijst met verwijzingen naar de technische 648 voor de juiste keuze, op pagina 648
U yj listy kodów technicznych Valeo na stronie 648 dla precyzyjnego doboru
A se folosi paginile crosslist ca sa identifiati referita corecta
Χρησιμοποιήστε την λίστα αντιστοιχίων κωδικών για να κάνετε σωστή και ακριβή επιλογή, σελίδα 648

		CC				OE NEW	Valeo NEW	OE ES	Valeo ES	
PEUGEOT (.../...)										
406 (99>) (.../...)										
1.8 i 16V, 1.8 i GPL 16V ▸9337	E	1749	EW7J4	ES	10/00 ▸ 06/02	6453CL	**699199**		**699699**	SD7V16
1.8 i 16V	E	1761	XU7JP4	ES	04/99 ▸ 03/04	6453AX		6453GP	**699606**	SD7V16
1.8 i, 1.8 i 16V 1.8 i GPL 16V	E	1761	XU7JB, XU7JP XU7JP4	ES	04/99 ▸ 04/04	6453TJ	**699236** ⊃MQ	6453GA	**699736**	SD7V16
2.0 HPi 16V, 2.0 i 16V ▸9337	E	1997	EW10D, EW10J4	ES	04/99 ▸ 04/04	6453CL	**699199**		**699699**	SD7V16
2.0 i 16V	E	1998	XU10J4R	ES	04/99 ▸ 04/04	6453TJ	**699236** ⊃MQ	6453GA	**699736**	SD7V16
2.2 i 16V ▸9337	E	2230	EW12J4	ES	05/00 ▸ 06/02	6453CL	**699199**		**699699**	SD7V16
2.0 HDi ▸8971	D	1997	DW10ATED, DW10TD	ES	04/99 ▸ 12/00	6453AQ	**699155**	6453GF	**699655**	V5
2.0 HDi 9338 ▸	D	1997	DW10ATED, DW10TD	ES	06/02 ▸ 04/04	6453TE	**699272** ⊃MQ	6453LR	**699772**	SD7V16
2.0 HDi ▸9337	D	1997	DW10ATED,DW10TD	ES	04/99 ▸ 04/04			6453NC	**813816**	V51135
2.2 HDi 16V ▸8973	D	2179	DW12TED4	ES	10/00 ▸ 06/01	6453TJ	**699236** ⊃MQ	6453GA	**699736**	SD7V16
2.2 HDi 16V 9338 ▸	D	2179	DW12TED4	ES	06/02 ▸ 10/04	6453TE	**699272** ⊃MQ	6453LR	**699772**	SD7V16
407										
1.8 i 16V	E	1749	EW7J4		04/04 ▸	6453RA	**699351**			SD7C16
1.8 i 16V ▸11563	E	1749	EW7A,EW7J4	ES	04/04 ▸ 07/08			6453WZ	**813718**	SD7C16
1.8 i 16V 11564 ▸ 11924	E	1749	EW7A	ES	06/08 ▸ 08/09			6453XC	**813726**	SD7C16
2.0 i 16V	E	1997	EW10J4		04/04 ▸	6453RA	**699351**			SD7C16
2.0 i 16V ▸11563	E	1997	EW10A,EW10J4	ES	04/04 ▸ 07/08			6453WZ	**813718**	SD7C16
2.0 i 16V 11564 ▸ 11924	E	1997	EW10A	ES	06/08 ▸ 08/09			6453XC	**813726**	SD7C16
2.2 i 16V	E	2230	EW12J4		04/04 ▸	6453RA	**699351**			SD7C16
2.2 i 16V 11564 ▸ 11924	E	2230	EW12J4	ES	06/08 ▸ 08/09			6453XC	**813726**	SD7C16
2.2 i 16V ▸11563	E	2230	EW12J4	ES	04/04 ▸ 07/08			6453WY	**813718**	SD7C16
3.0 i V6 24V 11010 ▸	E	2946	ES9A	ES	04/04 ▸			6453VJ	**813715**	SD7C16
1.6 HDi 16V	D	1560	DV6TED4		04/04 ▸	6453RG	**699349**			SD7C16
1.6 HDi 16V 11564 ▸	D	1560	DV6TED4	ES	07/08 ▸			6453XC	**813726**	SD7C16
1.6 HDi 16V ▸11563	D	1560	DV6TED4	ES	04/04 ▸			6453WY	**813718**	SD7C16
2.0 HDi 16V 10706 ▸ 11073	D	1997	DW10BTED4		03/06 ▸ 03/07	6453SN	**813163**			SD7C16
2.0 HDi 16V 11564 ▸ 11864	D	1997	DW10BTED4	ES	04/04 ▸ 05/09			6453XF	**813725**	SD7C16
2.0 HDi 16V 10706 ▸ 11563	D	1997	DW10BTED4	ES	04/04 ▸ 07/08	6453SN	**813163**	6453WX	**813663**	SD7C16
2.0 HDi 16V ▸10705	D	1997	DW10BTED4	ES	04/04 ▸	6453RF	**813225**	6453XE	**813725**	SD7C16
2.2 HDi 16V	D	2179	DW12BTED4		06/06 ▸ 03/07	6453SN	**813163**			SD7C16
2.2 HDi 16V 11564 ▸ 11864	D	2179	DW12BTED4	ES	07/08 ▸ 05/09			6453XF	**813725**	SD7C16
2.2 HDi 16V ▸11563	D	2179	DW12BTED4	ES	06/06 ▸ 07/08	6453SN	**813163**	6453WX	**813663**	SD7C16

You must replace the receiver drier with the compressor
Vous devez remplacer la bouteille déshydratante avec le compresseur
Tauschen Sie den Trockner mit dem Kompressor
Es obligatorio cambiar el Filtro Deshidratante con el Compresor
Tem de substituir o filtro desidratante com o compressor
E' necessario cambiare il filtro disidratatore con il compressore
U moet de filterdroger samen met de compressor vervangen

Musisz wymienić filtr osuszacz przy wymianie sprę arki
Рекомендируем замену осушителя вместо с компрессором
Při výměně kompresoru je nutné vyměnit také vysoušeč
Nu untați sa schimbați uscatorul cu compresorul
Kompresörle birlikte nem alıcıyı da değiştirin
Πρέπει να αντικαταστήσετε το φίλτρο υγρού μαζί με το συμπεστή

		cc				OE NEW	Valeo NEW	OE ES	Valeo ES	
PEUGEOT (.../...)										
407 (.../...)										
2.7 HDi V6 24V	D	2720	DT17TED4		10/05 ▸	6453RG	**699349**			SD7C16
2.7 HDi V6 24V Auto	D	2720	DT17BTED4/F	ES	10/05 ▸ 06/08			6453WV	**813712**	SD7C16
508										
1.6 THP 156 16V	E	1598	EP6CDT	ES	03/11 ▸	648708	**•813223**	6453WL	**813723**	SD6C12
5008										
1.6 HDi	D	1560	DV6C,DV6TED4	ES	09/09 ▸	6453ZA	**813162**	6453QN	**813662**	SD7C16
605 (89>94)										
2.0, 2.0 i, 2.0 i Turbo	E	1998	XU102C, XU102C TR XU10J2, XU10J2TE XU10M	ES	10/89 ▸ 09/93			6453FZ	**699518**	SD709
2.0, 2.0 i, 2.0 i Turbo	E	1998	XU102C, XU102C TR XU10J2, XU10J2TE XU10M	ES	09/93 ▸ 06/94	6453GK			**699523**	SD7H15
3.0 i V6, 3.0 i V6 24V	E	2975	ZPJ, ZPJ4	ES	10/89 ▸ 09/93			6453FZ	**699518**	SD709
3.0 i V6, 3.0 i V6 24V	E	2975	ZPJ, ZPJ4	ES	09/93 ▸ 06/94	6453Q2		6453GJ	**699525**	SD7V16
2.1 TD Turbo	D	2088	XUD11ATE XUD11BTE	ES	04/90 ▸ 09/93			6453FZ	**699518**	SD709
2.1 TD Turbo	D	2088	XUD11ATE XUD11BTE	ES	09/93 ▸ 05/99	6453GK			**699523**	SD7H15
2.1 D	D	2138	XUD11A	ES	09/90 ▸ 09/93			6453FZ	**699518**	SD709
2.1 D	D	2138	XUD11A	ES	09/93 ▸ 06/94	6453GK			**699523**	SD7H15
605 (94>99)										
2.0, 2.0 i, 2.0 i 16V 2.0 i Turbo	E	1998	XU102C TR, XU10J2 XU10J2CTE/L3 XU10J4R	ES	07/94 ▸ 05/99	6453GK			**699523**	SD7H15
2.0, 2.0 i, 2.0 i 16V 2.0 i Turbo	E	1998	XU102C TR XU10J2/CTE/L3 XU10J4R	ES	07/94 ▸ 05/99	6453P9		6453GE	**699520**	SD7H15
3.0 i V6 24V	E	2963	ES9J4	ES	06/97 ▸ 05/99	6453AX		6453GP	**699606**	SD7V16
2.1 TD Turbo	D	2088	XUD11ATE	ES	07/94 ▸ 05/99	6453P9		6453GE	**699520**	SD7H15
2.1 TD Turbo	D	2088	XUD11BTE	ES	07/94 ▸ 05/99	6453TJ	**699236** ⊃MQ	6453GA	**699736**	SD7V16
2.5 TD	D	2446	DK5ATE	ES	07/94 ▸ 05/99	6453TJ	**699236** ⊃MQ	6453GA	**699736**	SD7V16
607 (2000>2004)										
2.0 i 16V ▸ 9337	E	1997	EW10J4	ES	05/00 ▸ 06/02	6453CL	**699199**		**699699**	SD7V16
2.2 i 16V ▸ 9337	E	2230	EW12J4	ES	05/00 ▸ 06/02	6453CL	**699199**		**699699**	SD7V16
3.0 i V6 24V ▸ 9337	E	2946	ES9J4S	ES	05/00 ▸ 06/02	6453AX		6453GP	**699606**	SD7V16
3.0 i V6 24V 9338 ▸	E	2946	ES9J4S	ES	06/02 ▸ 09/04			6453NJ	**813804**	SD7V16
2.0 HDi ▸ 8938	D	1997	DW10ATED	ES	05/00 ▸ 03/01	6453TJ	**699236** ⊃MQ	6453GA	**699736**	SD7V16
2.0 HDi 9338 ▸	D	1997	DW10ATED	ES	06/02 ▸ 09/04	6453TE	**699272** ⊃MQ	6453LR	**699772**	SD7V16
2.2 HDi 16V ▸ 8938	D	2179	DW12TED4	ES	05/00 ▸ 03/01	6453TJ	**699236** ⊃MQ	6453GA	**699736**	SD7V16
2.2 HDi 16V 9338 ▸	D	2179	DW12TED4	ES	06/02 ▸ 06/03	6453TE	**699272** ⊃MQ	6453LR	**699772**	SD7V16

• **New** Nouveau **Neu** Nuevo **Novo** Nuovo **Nieuw** Nowi **Новый** Novy **Nou** Yeni **Νέους**

⊃MQ : **Valeo Matching Quality** Valeo gleichwertige Qualität **Valeo Calidad Equivalente**
Część Valeo o Jakości Porównywalnej z Oryginałem

Use technical code cross-list for precise selection page 648
Utiliser les pages Cross-List (page 648) pour identifier la bonne référence
Verwenden Sie die Code-Vergleichsliste zur gezielten Suche des adäquaten Bauteils, Seite 648
Utilizar la lista de códigos cruzados para una selección precisa, página 648
Utilizzare la crosslist dei codici tecnici per una scelta precisa, pag. 648
Gebruik de lijst met verwijzingen naar de technische 648 voor de juiste keuze, op pagina 648
U yj listy kodów technicznych Valeo na stronie 648 dla precyzyjnego doboru
A se folosi paginile crosslist ca sa identifiati referita corecta
Χρησιμοποιήστε την λίστα αντιστοιχίων κωδικών για να κάνετε σωστή και ακριβή επιλογή, σελίδα 648

		cc				OE NEW	Valeo NEW	OE ES	Valeo ES	
PEUGEOT (.../...)										
607 (2004>)										
2.2 i 16V	E	2230	EW12J4	ES	10/04 ▸	6453TE	**699272** ⊃MQ	6453LR	**699772**	SD7V16
3.0 i V6 24V	E	2946	ES9A		10/04 ▸	6453RA	**699351**			SD7C16
2.0 HDi	D	1997	DW10ATED	ES	10/04 ▸	6453TE	**699272** ⊃MQ	6453LR	**699772**	SD7V16
2.0 HDi 16V	D	1997	DW10BTED4	ES	01/06 ▸	6453RE	**813225**	6453XE	**813725**	SD7C16
2.2 HDi 16V	D	2179	DW12TED4	ES	10/04 ▸	6453TE	**699272** ⊃MQ	6453LR	**699772**	SD7V16
2.2 HDi 16V	D	2179	DW12BTED4		10/04 ▸	6453SN	**813163**			SD7C16
806 (94>98)										
1.8 i	E	1761	XU7JP	ES	06/95 ▸ 09/98	6453TJ	**699236** ⊃MQ	6453GA	**699736**	SD7V16
2.0 i, 2.0 i Turbo	E	1998	XU10J2C/TE XU10J2CTEL3	ES	07/94 ▸ 09/98	6453TJ	**699236** ⊃MQ	6453GA	**699736**	SD7V16
1.9 TD	D	1905	XUD9BTF, XUD9TE XUD9TEF	ES	08/94 ▸ 09/98	6453TJ	**699236** ⊃MQ	6453GA	**699736**	SD7V16
2.1 TD	D	2088	XUD11BTE	ES	06/96 ▸ 09/98	6453TJ	**699236** ⊃MQ	6453GA	**699736**	SD7V16
806 (98>2002)										
1.8 i	E	1761	XU7JP	ES	10/98 ▸ 05/02	6453TJ	**699236** ⊃MQ	6453GA	**699736**	SD7V16
2.0 i, 2.0 i 16V **2.0 i Turbo CT**	E	1998	XU10J2C XU10J2CTEL3 XU10J4R	ES	10/98 ▸ 05/02	6453TJ	**699236** ⊃MQ	6453GA	**699736**	SD7V16
2.0 i 16V	E	1997	EW10J4	ES	07/00 ▸ 05/02	6453CL	**699199**		**699699**	SD7V16
1.9 TD	D	1905	XUD9BTF	ES	10/98 ▸ 05/02	6453TJ	**699236** ⊃MQ	6453GA	**699736**	SD7V16
2.0 HDi, 2.0 HDi 16V	D	1997	DW10ATED DW10ATED4	ES	08/99 ▸ 05/02	6453TJ	**699236** ⊃MQ	6453GA	**699736**	SD7V16
2.1 TD	D	2088	XUD11BTE	ES	10/98 ▸ 05/02	6453TJ	**699236** ⊃MQ	6453GA	**699736**	SD7V16
807										
2.0 i 16V	E	1997	EW10J4	ES	06/02 ▸	6453CL	**699199**		**699699**	SD7V16
2.2 i 16V	E	2230	EW12J4	ES	06/02 ▸ 09/05	6453CL	**699199**		**699699**	SD7V16
3.0 i V6 24V	E	2946	ES9J4S	ES	06/02 ▸ 09/05	6453AX		6453GP	**699606**	SD7V16
3.0 i V6 24V 10066 ▸	E	2946	ES9J4S	ES	06/04 ▸ 09/05			6453NJ	**813804**	SD7V16
2.0 HDi	D	1997	DW10ATED4	ES	06/02 ▸	6453TE	**699272** ⊃MQ	6453LR	**699772**	SD7V16
2.2 HDi	D	1997	DW12TED4	ES	06/02 ▸	6453TE	**699272** ⊃MQ	6453LR	**699772**	SD7V16
2.0 HDi 16V	D	1997	DW10ATED4 DW10BTED4 DW10UTED4		06/02 ▸	6453YW	•**813322**	6453YX		SD7V16
2.0 HDi 16V	D	1997	DW10ATED4 DW10BTED4 DW10UTED4	ES	06/02 ▸			6453TC	**813811**	SD7V16
2.2 HDi 16V	D	2179	DW12TED4		06/02 ▸ 06/06	6453YW	•**813322**	6453YX		SD7V16
2.2 HDi 16V	D	2179	DW12TED4	ES	06/02 ▸ 06/06			6453TC	**813811**	SD7V16
PEUGEOT										
BIPPER										
1.4 i	E	1360	TU3A	ES	12/07 ▸			6453QH	**813809**	SD6V12

You must replace the receiver drier with the compressor
Vous devez remplacer la bouteille déshydratante avec le compresseur
Tauschen Sie den Trockner mit dem Kompressor
Es obligatorio cambiar el Filtro Deshidratante con el Compresor
Tem de substituir o filtro desidratante com o compressor
E' necessario cambiare il filtro disidratatore con il compressore
U moet de filterdroger samen met de compressor vervangen
Musisz wymienić filtr osuszacz przy wymianie sprę arki
Рекомендируем замену осушителя вместо с компрессором
Při výměně kompresoru je nutné vyměnit také vysoušeč
Nu uitați sa schimbați uscatorul cu compresorul
Kompresörle birlikte nem alıcıyı da değiştirin
Πρέπει να αντικαταστήσετε το φίλτρο υγρού μαζί με το συμπεστή

		cc				OE NEW	Valeo NEW	OE ES	Valeo ES	

PEUGEOT (.../...)

BIPPER (.../...)

1.4 i	E	1360	TU3A,TU3AE5	ES	12/07 ▸	648722	•**813317**	6453XK	**813817**	SD7V12
1.4 HDi	D	1398	DV4TED	ES	12/07 ▸			6453QH	**813809**	SD6V12
1.4 HDi	D	1398	DV4TED	ES	12/07 ▸	6453QG	•**813317**	6453XK	**813817**	SD7V12

BOXER (94>2001)

2.0, 2.0 i	E	1998	XU102CU, XU10J2U	ES	02/94 ▸ 12/01	6453P9		6453GE	**699520**	SD7H15
1.9 D, 1.9 TD	D	1905	XUD9A, XUD9AU XUD9TEF, XUD9UTF	ES	02/94 ▸ 12/01	6453P9		6453GE	**699520**	SD7H15
2.0 HDi	D	1997	DW10TD	ES	09/01 ▸ 12/01	6453TJ	**699236** ⊃MQ	6453GA	**699736**	SD7V16
2.5 D, 2.5 TD, 2.5 TDi	D	2446	DJ5, DJ5T, DJ5TED	ES	02/94 ▸ 12/01	6453T0		6453GQ	**699528**	SD7H15
2.8 D,2.8 HDi,2.8 TD	D	2798	8140-43,8140-43S 8140-63	ES	06/99 ▸ 12/01			6453NR	**813808**	SD7H15

BOXER (2002>)

2.0 i	E	1998	XU10J2U	ES	01/02 ▸	6453TJ	**699236** ⊃MQ	6453GA	**699736**	SD7V16
2.0 HDi	D	1997	DW10UTD	ES	01/02 ▸	6453TJ	**699236** ⊃MQ	6453GA	**699736**	SD7V16
2.2 HDi	D	2179	DW12TED	ES	01/02 ▸	6453TJ	**699236** ⊃MQ	6453GA	**699736**	SD7V16
2.8 HDi	D	2798	F28TDCR	ES	01/02 ▸			6453NR	**813808**	SD7H15

EXPERT (95>2003)

1.8 i	E	1761	XU7JP	ES	11/99 ▸ 12/03	6453TJ	**699236** ⊃MQ	6453GA	**699736**	SD7V16
2.0 i 16V	E	1997	EW10J4	ES	09/00 ▸ 12/03	6453CL	**699199**		**699699**	SD7V16
1.9 D	D	1868	DW8	ES	05/98 ▸ 08/01	6453TJ	**699236** ⊃MQ	6453GA	**699736**	SD7V16
1.9 D, 1.9 TD	D	1905	XUD9A, XUD9BTF XUD9TEF	ES	09/95 ▸ 12/03	6453TJ	**699236** ⊃MQ	6453GA	**699736**	SD7V16
2.0 HDi, 2.0 HDi 16V	D	1997	DW10ATED/4 DW10BTED	ES	09/00 ▸ 12/03	6453TJ	**699236** ⊃MQ	6453GA	**699736**	SD7V16

EXPERT (2044>2006)

2.0 i 16V	E	1997	EW10J4	ES	01/04 ▸ 12/06	6453CL	**699199**		**699699**	SD7V16
1.9 D	D	1868	DW8B	ES	01/04 ▸ 12/06	6453TJ	**699236** ⊃MQ	6453GA	**699736**	SD7V16
2.0 HDi, 2.0 HDi 16V	D	1997	DW10ATED4 DW10BTED/+L4	ES	01/04 ▸ 12/06	6453TJ	**699236** ⊃MQ	6453GA	**699736**	SD7V16

EXPERT (2004>2006)

2.0 i 16V 10619 ▸	E	1997	EW10J4	ES	12/05 ▸ 12/06			6453YK	**813820**	SD7V16
1.9 D 10619 ▸	D	1868	DW8B	ES	01/04 ▸ 12/06			6453QW	**813810**	SD7V16
2.0 HDi,2.0 HDi 16V 10619 ▸	D	1997	DW10ATED4 DW10BTED DW10BTED+L4	ES	01/04 ▸ 12/06			6453QW	**813810**	SD7V16

EXPERT (2007>)

2.0 i 16V 11452 ▸	E	1997	EW10A	ES	03/07 ▸			6453YK	**813820**	SD7V16
1.6 HDi 16V 11452 ▸	D	1560	DV6UTED4	ES	01/07 ▸			6453YK	**813820**	SD7V16
2.0 HDi 16V ▸ 12382	D	1997	DW10BTED4 DW10UTED4		01/07 ▸	6453YW	•**813322**	6453YX		SD7V16

• **New** Nouveau **Neu** Nuevo **Novo** Nuovo **Nieuw** Nowi **Новый** Novy **Nou** Yeni **Νέους**

⊃MQ : **Valeo Matching Quality** Valeo gleichwertige Qualität **Valeo Calidad Equivalente**
Część Valeo o Jakości Porównywalnej z Oryginałem

Use technical code cross-list for precise selection page 648
Utiliser les pages Cross-List (page 648) pour identifier la bonne référence
Verwenden Sie die Code-Vergleichsliste zur gezielten Suche des adäquaten Bauteils, Seite 648
Utilizar la lista de códigos cruzados para una selección precisa, página 648
Utilizzare la crosslist dei codici tecnici per una scelta precisa, pag. 648
Gebruik de lijst met verwijzingen naar de technische 648 voor de juiste keuze, op pagina 648
U yj listy kodów technicznych Valeo na stronie 648 dla precyzyjnego doboru
A se folosi paginile crosslist ca sa identifiati referita corecta
Χρησιμοποιήστε την λίστα αντιστοιχίων κωδικών για να κάνετε σωστή και ακριβή επιλογή, σελίδα 648

		cc				OE NEW	Valeo NEW	OE ES	Valeo ES	
PEUGEOT (.../...)										
EXPERT (2007>) (.../...)										
2.0 HDi 16V	D	1997	DW10BTED4 DW10UTED4	ES	01/07 ▸			6453VC	**813813**	SD7V16
2.0 HDi 16V	D	1997	DW10BTED4 DW10UTED4	ES	01/07 ▸			6453TC	**813811**	SD7V16
PARTNER (96>2002)										
1.1 i, 1.1 i GPL ▸08721	E	1124	TU1M+	ES	06/96 ▸ 09/00	6453N1		6453GC	**699526**	SD7V12
1.4 i, 1.4 i GPL ▸08721	E	1360	TU3JP	ES	06/96 ▸ 09/00	6453N1		6453GC	**699526**	SD7V12
1.4	E	1360	TU3.2	ES	06/96 ▸ 11/02			6453GN	**699522**	SD7H13
1.4 i 8722 ▸	E	1360	TU3JP	ES	09/00 ▸ 11/02	6453FS	**699237** ⊃MQ	6453JK	**699737**	SD6V12
1.8 i	E	1761	XU7JB	ES	05/97 ▸ 11/02	6453TJ	**699236** ⊃MQ	6453GA	**699736**	SD7V16
1.8 D	D	1769	XUD7	ES	06/96 ▸ 11/02	6453TJ	**699236** ⊃MQ	6453GA	**699736**	SD7V16
1.9 D	D	1868	DW8, DW8B	ES	10/98 ▸ 11/02	6453TJ	**699236** ⊃MQ	6453GA	**699736**	SD7V16
1.9 D	D	1905	XUD9A	ES	06/96 ▸ 11/02	6453TJ	**699236** ⊃MQ	6453GA	**699736**	SD7V16
2.0 HDi	D	1997	DW10TD	ES	05/00 ▸ 11/02	6453TJ	**699236** ⊃MQ	6453GA	**699736**	SD7V16
PARTNER (2002>)										
1.1 i	E	1124	TU1JP	ES	11/02 ▸	6453LF	**813189** ⊃MQ	6453LH	**813689**	SD6V12
1.1 i 10073 ▸	E	1124	TU1JP	ES	11/02 ▸ 05/08			6453QE	**813824**	SD7V12
1.1 i 10073 ▸	E	1124	TU1JP	ES	06/04 ▸ 05/08	648714	•**813317**	6453XK	**813817**	SD7V12
1.4 i	E	1360	TU3JP	ES	11/02 ▸	6453LF	**813189** ⊃MQ	6453LH	**813689**	SD6V12
1.4 i 10073 ▸	E	1360	TU3A,TU3JP	ES	11/02 ▸ 05/08			6453QE	**813824**	SD7V12
1.4 i GNV,1.4 i GPL 10073 ▸	F	1360	TU3JP	ES	04/03 ▸ 06/04	648714	•**813317**	6453XK	**813817**	SD7V12
1.4 i	E	1360	TU3A,TU3JP	ES	06/04 ▸ 05/08	648714	•**813317**	6453XK	**813817**	SD7V12
1.6 i 16V	E	1587	TU5JP4	ES	11/02 ▸	6453LF	**813189** ⊃MQ	6453LH	**813689**	SD6V12
1.6 i 16V 10073 ▸	E	1587	TU5JP4	ES	11/02 ▸ 05/08			6453QE	**813824**	SD7V12
1.6 i 16V 10073 ▸	E	1587	TU5JP4	ES	06/04 ▸ 05/08	648714	•**813317**	6453XK	**813817**	SD7V12
1.9 D	D	1868	DW8B	ES	11/02 ▸	6453TE	**699272** ⊃MQ	6453LR	**699772**	SD7V16
2.0 HDi	D	1997	DW10TD	ES	11/02 ▸	6453TE	**699272** ⊃MQ	6453LR	**699772**	SD7V16
PARTNER (2008>)										
1.6 i 16V	E	1587	TU5JP4,TU5JP4B		05/08 ▸	6453WK	**813162**			SD7C16
1.6 i 16V	E	1587	TU5JP4,TU5JP4B	ES	05/08 ▸	648708	•**813223**	6453WL	**813723**	SD6C12
1.6 HDi	D	1560	DV6AUTED4 DV6BUTED4,DV6C DV6DTED,DV6TED4B DV6TED4BU	ES	05/08 ▸	648708	•**813223**	6453WL	**813723**	SD6C12
1.6 HDi	D	1560	DV6DTED DV6BUTED4	ES	05/08 ▸			648709	•**813749**	SD6C12

You must replace the receiver drier with the compressor
Vous devez remplacer la bouteille déshydratante avec le compresseur
Tauschen Sie den Trockner mit dem Kompressor
Es obligatorio cambiar el Filtro Deshidratante con el Compresor
Tem de substituir o filtro desidratante com o compressor
E' necessario cambiare il filtro disidratatore con il compressore
U moet de filterdroger samen met de compressor vervangen
Musisz wymienić filtr osuszacz przy wymianie sprę arki
Рекомендируем замену осушителя вместо с компрессором
Při výměně kompresoru je nutné vyměnit také vysoušeč
Nu untați sa schimbați uscatorul cu compresorul
Kompresörle birlikte nem alıcıyı da değiştirin
Πρέπει να αντικαταστήσετε το φίλτρο υγρού μαζί με το συμπεστή

		CC				OE NEW	Valeo NEW	OE ES	Valeo ES	
PEUGEOT (.../...)										
RANCH (96>2002)										
1.4 i	E	1360	TU3JP	ES	06/96 ▸ 11/02	6453N1		6453GC	**699526**	SD7V12
1.8 i	E	1761	XU7JB	ES	07/97 ▸ 11/02	6453TJ	**699236** ⊃MQ	6453GA	**699736**	SD7V16
1.8 D	D	1769	XUD7	ES	06/96 ▸ 11/02	6453TJ	**699236** ⊃MQ	6453GA	**699736**	SD7V16
1.9 D	D	1868	DW8, DW8B	ES	11/98 ▸ 11/02	6453TJ	**699236** ⊃MQ	6453GA	**699736**	SD7V16
1.9 D	D	1905	XUD9A	ES	06/96 ▸ 11/02	6453TJ	**699236** ⊃MQ	6453GA	**699736**	SD7V16
2.0 HDi	D	1997	DW10TD	ES	01/01 ▸ 11/02	6453TJ	**699236** ⊃MQ	6453GA	**699736**	SD7V16
RANCH (2002>)										
1.4 i	E	1360	TU3JP	ES	11/02 ▸ 06/04	6453LF	**813189** ⊃MQ	6453LH	**813689**	SD6V12
1.4 i 10073 ▸	E	1360	TU3A,TU3JP	ES	06/04 ▸ 05/08			6453QE	**813824**	SD7V12
1.4 i	E	1360	TU3A,TU3JP	ES	06/04 ▸ 05/08	648714	•**813317**	6453XK	**813817**	SD7V12
1.6 i 16V 10073 ▸	E	1587	TU5JP4	ES	06/04 ▸ 05/08			6453QF	**813824**	SD7V12
1.6 i 16V 10073 ▸	E	1587	TU5JP4	ES	06/04 ▸ 05/08	648714	•**813317**	6453XK	**813817**	SD7V12
1.9 D	D	1868	DW8B	ES	11/02 ▸	6453TE	**699272** ⊃MQ	6453LR	**699772**	SD7V16
2.0 HDi	D	1997	DW10TD	ES	11/02 ▸	6453TE	**699272** ⊃MQ	6453LR	**699772**	SD7V16
PORSCHE										
911 CARRERA (997-1)										
3.6 i 325	E	3596	M96.05		07/04 ▸ 06/08	99612601152	**813166**			7SBU16C
3.8 i 355,3.8 i 381	E	3824	M97.01,M97.01S		07/04 ▸ 06/08	99612601152	**813166**			7SBU16C
911 TURBO / GT2 (997T)										
3.6 i 480 24V,3.6 i 530 24V	E	3600	M97.70,M97.70S		02/06 ▸ 12/09	99612601152	**813166**			7SBU16C
BOXSTER (96>2002)										
2.5 i 24V	E	2480	M96.20		08/96 ▸ 08/99	99612601152	**813166**			7SBU16C
2.7 i 24V	E	2687	M96.22		08/99 ▸ 06/02	99612601152	**813166**			7SBU16C
3.2 i 24V	E	3179	M96.21		08/99 ▸ 06/02	99612601152	**813166**			7SBU16C
BOXSTER (2004>2009)										
2.7 i 24V	E	2687	M96.25,M97.20		11/04 ▸ 11/08	99612601152	**813166**			7SBU16C
3.2 i 24V	E	3179	M96.26		11/04 ▸ 08/06	99612601152	**813166**			7SBU16C
3.4 i 24V	E	3387	M97.21,M97.22		07/06 ▸ 04/09	99612601152	**813166**			7SBU16C
RENAULT										
R19										
1.7, 1.7 i, 1.8 i	E	1721	F2N, F3N	ES	07/88 ▸ 11/95			7701499827	**699504**	SD709
1.8 i	E	1794	F3P	ES	05/92 ▸ 11/95			7701499827	**699504**	SD709
R21										
1.7, 1.7 i	E	1721	F2N, F3N	ES	06/86 ▸ 08/95			7701499827	**699504**	SD709
2.0	E	1965	F2R	ES	06/86 ▸ 03/92			7701499827	**699504**	SD709
2.0, 2.0 i, 2.0 i Turbo	E	1995	J6R, J6T, J7R	ES	03/86 ▸ 01/94	7700857170			**699501**	SD709
2.0, 2.0 i, 2.0 i Turbo	E	1995	J6R, J6T, J7R	ES	03/86 ▸ 01/94	6025107881			**813630**	SD7H15

• **New** Nouveau **Neu** Nuevo **Novo** Nuovo **Nieuw** Nowi **Новый** Nowy **Nou** Yeni **Νέους**

⊃MQ : **Valeo Matching Quality** Valeo gleichwertige Qualität **Valeo Calidad Equivalente**
Część Valeo o Jakości Porównywalnej z Oryginałem

Use technical code cross-list for precise selection page 648
Utiliser les pages Cross-List (page 648) pour identifier la bonne référence
Verwenden Sie die Code-Vergleichsliste zur gezielten Suche des adäquaten Bauteils, Seite 648
Utilizar la lista de códigos cruzados para una selección precisa, página 648
Utilizzare la crosslist dei codici tecnici per una scelta precisa, pag. 648
Gebruik de lijst met verwijzingen naar de technische 648 voor de juiste keuze, op pagina 648
U yj listy kodów technicznych Valeo na stronie 648 dla precyzyjnego doboru
A se folosi paginile crosslist ca sa identifiati referita corecta
Χρησιμοποιήστε την λίστα αντιστοιχίων κωδικών για να κάνετε σωστή και ακριβή επιλογή, σελίδα 648

					OE NEW	Valeo NEW	OE ES	Valeo ES	
RENAULT (.../...)									
R21 (.../...)									
2.2, 2.2 i	E	2165	J7T	06/86 ▸ 08/95	7700857170			**699501**	SD709
2.2, 2.2 i	E	2165	J7T	06/86 ▸ 08/95	6025107881			**813630**	SD7H15
2.1 D, 2.1 TD	D	2068	J8S	06/86 ▸ 08/95	7700857170			**699501**	SD709
2.1 D, 2.1 TD	D	2068	J8S	06/86 ▸ 08/95	6025107881			**813630**	SD7H15
R25									
2.0	E	1995	J6R, J7R	06/88 ▸ 01/92	7700857170			**699501**	SD709
2.2	E	2165	J7T	06/88 ▸ 01/92	7700857170			**699501**	SD709
2.5 V6 Turbo	E	2458	Z7U	09/85 ▸ 01/92			7701499807	**699505**	SD709
2.6 V6 Injection	E	2664	Z7V	09/83 ▸ 05/89			7701499807	**699505**	SD709
2.8 V6, 2.8 V6 Injection	E	2849	Z7W	09/85 ▸ 01/92			7701499807	**699505**	SD709
2.1 D, 2.1 TD	D	2068	J8S	06/88 ▸ 01/92	7700857170			**699501**	SD709
AVANTIME									
2.0 i Turbo 16V	E	1998	F4R	11/01 ▸ 03/03	8200021822	**699240**		**699740**	V5
2.2 dCi 16V	D	2188	G9T	02/02 ▸ 03/03	8200021822	**699240**		**699740**	V5
CLIO (90>98)									
1.2 i	E	1149	D7F	03/96 ▸ 02/98	7700106069	**699059**		**699559**	SD7V16
1.2, 1.2 i	E	1171	E5F, E7F	06/90 ▸ 02/96			7701499856	**699533**	SD709
1.2, 1.2 i	E	1171	E5F, E7F	06/90 ▸ 02/98	7700272400		7701499811	**699538**	SD7H15
1.2 i	E	1171	E7F	01/94 ▸ 02/98	7700272497	**699039**	7701499819	**699539**	SD7V16
1.4, 1.4 i	E	1390	E6J, E7J	06/90 ▸ 02/96			7701499856	**699533**	SD709
1.4, 1.4 i	E	1390	E6J, E7J	06/90 ▸ 02/98	7700272400		7701499811	**699538**	SD7H15
1.4 i	E	1390	E7J	10/94 ▸ 02/96	7700859676	**699003**			SD7H15
1.4 i	E	1390	E7J	01/94 ▸ 02/98	7700272497	**699039**	7701499819	**699539**	SD7V16
1.8 i	E	1794	F3P	01/93 ▸ 02/96	7700861779			**699618**	SD709
CLIO II (98>2001)									
1.2 i ▸ 981211	E	1149	D7F	03/98 ▸ 12/98	7700106069	**699059**		**699559**	SD7V16
1.2 i	E	1149	D7F	03/98 ▸ 03/01	8200315744	**699218**		**699718**	SD6V12
1.2 i 981211 ▸ 000505	E	1149	D7F	12/98 ▸ 05/00	7700115830	**699202**			SD6V12
1.2 i 000505 ▸	E	1149	D7F	05/00 ▸ 03/01	8200037058	**699234**		**699734**	SD6V12
1.4 i	E	1390	E7J	03/98 ▸ 03/01	7700875357	**699144**	7701499858	**699644**	SD7V16
1.4 i, 1.4 i 16V	E	1390	E7J, K4J, K7J	10/98 ▸ 03/01	8200315744	**699218**		**699718**	SD6V12
1.6 i	E	1598	K7M	03/98 ▸ 03/01	7700875357	**699144**	7701499858	**699644**	SD7V16
1.6 i 16V ▸ 990310	E	1598	K4M	07/98 ▸ 03/99	7700106441	**699221**		**699721**	SD7V16
1.6 i 16V ▸ 990310	E	1598	K4M	07/98 ▸ 03/99	7700106069	**699059**		**699559**	SD7V16
1.6 i, 1.6 i 16V 990310 ▸	E	1598	K4M, K7M	07/98 ▸ 03/01	8200315744	**699218**		**699718**	SD6V12
2.0 i 16V	E	1998	F4R	01/00 ▸ 03/01	6000073500	**699239**	7711134208	**699739**	SD6V12
1.9 D ▸ 981223	D	1870	F8Q	03/98 ▸	7700100417	**699107**	7701499850	**699607**	SD7V16
1.9 D, 1.9 dTi 981223 ▸	D	1870	F8Q, F9Q	12/98 ▸ 03/01	7700111235	**699191**		**699691**	SD6V12
CLIO II (2001>2005)									
1.0 i	E	999	D7D	04/01 ▸	8200037058	**699234**		**699734**	SD6V12
1.2 i, 1.2 i 16V	E	1149	D4F, D7F	04/01 ▸	8200037058	**699234**		**699734**	SD6V12
1.4 i, 1.4 i 16V	E	1390	E7J, K4J, K7J	04/01 ▸	8200315744	**699218**		**699718**	SD6V12
1.6 i	E	1598	K7M	04/01 ▸	7700875357	**699144**	7701499858	**699644**	SD7V16
1.6 i 16V	E	1598	K4M	04/01 ▸	8200315744	**699218**		**699718**	SD6V12

You must replace the receiver drier with the compressor
Vous devez remplacer la bouteille déshydratante avec le compresseur
Tauschen Sie den Trockner mit dem Kompressor
Es obligatorio cambiar el Filtro Deshidratante con el Compresor
Tem de substituir o filtro desidratante com o compressor
E' necessario cambiare il filtro disidratatore con il compressore
U moet de filterdroger samen met de compressor vervangen
Musisz wymienić filtr osuszacz przy wymianie sprę arki
Рекомендируем замену осушителя вместо с компрессором
Při výměně kompresoru je nutné vyměnit také vysoušeč
Nu untați sa schimbați uscatorul cu compresorul
Kompresörle birlikte nem alıcıyı da değiştirin
Πρέπει να αντικαταστήσετε το φίλτρο υγρού μαζί με το συμπεστή

		CC				OE NEW	Valeo NEW	OE ES	Valeo ES	
RENAULT (.../...)										
CLIO II (2001>2005) (.../...)										
2.0 i 16V	E	1998	F4R	ES	04/01 ▸	6000073500	**699239**	7711134208	**699739**	SD6V12
1.5 dCi	D	1461	K9K	ES	04/01 ▸	8200315744	**699218**		**699718**	SD6V12
1.9 D, 1.9 dTi	D	1870	F8Q, F9Q	ES	04/01 ▸	7700111235	**699191**		**699691**	SD6V12
CLIO III (2005>)										
1.2 i 16V	E	1149	D4F	ES	09/05 ▸	8200357173	**813132**		**813632**	SD6V12
1.4 i 16V	E	1390	K4J	ES	09/05 ▸	8200365787	**813131**		**813631**	SD6V12
1.4 i 16V	E	1390	K4J	ES	09/05 ▸ 04/09	8200651251	**813165**	7711497298	**•813665**	SD6V12
1.6 i 16V	E	1598	K4M	ES	09/05 ▸	8200365787	**813131**		**813631**	SD6V12
1.6 i 16V	E	1598	K4M	ES	09/05 ▸ 04/09	8200651251	**813165**	7711497298	**•813665**	SD6V12
1.5 dCi	D	1461	K9K	ES	09/05 ▸	8200365787	**813131**		**813631**	SD6V12
1.5 dCi	D	1461	K9K	ES	09/05 ▸ 04/09	8200651251	**813165**	7711497298	**•813665**	SD6V12
CLIO III FL (2009>)										
2.0 i 201 16V	E	1998	F4R	ES	04/09 ▸			7711497516	**813826**	CVC085
CLIO IV										
0.9 Tce	E	898	H4B.4.00		10/12 ▸	926000217R	**•813382**			DCS17
1.2 essence 4 cylindres	E	1149	D4F.7.40		10/12 ▸	926009582R	**•813381**			DCS17
1.6 turbo	E				10/12 ▸	926001243R	**•813384**			DCS17
1.5 dci	D	1461	K9K.6.08		10/12 ▸	926002352R	**•813383**			DCS17
ESPACE II (91>96)										
2.0 i	E	1995	J7R	ES	01/91 ▸ 07/94	7700857170			**699501**	SD709
2.0 i	E	1995	J7R	ES	01/91 ▸ 08/96	6025107881			**813630**	SD7H15
2.2 i	E	2165	J7T	ES	01/91 ▸ 05/96	7700857170			**699501**	SD709
2.2 i	E	2165	J7T	ES	03/94 ▸ 08/96	6025107881			**813630**	SD7H15
2.8 V6	E	2849	Z7W	ES	04/91 ▸ 03/94			7701499807	**699505**	SD709
2.8 V6	E	2849	Z7W	ES	06/95 ▸ 08/96	6025107881			**813630**	SD7H15
2.1 dT	D	2068	J8S	ES	01/91 ▸ 05/96	7700857170			**699501**	SD709
2.1 dT	D	2068	J8S	ES	06/92 ▸ 08/96	6025107881			**813630**	SD7H15
ESPACE III (96>2000)										
2.0 i	E	1998	F3R		10/96 ▸ 06/00	7700859676	**699003**			SD7H15
1.9 dTi	D	1870	F9Q	ES	01/99 ▸ 06/00	7700111289	**699088**		**699588**	SD7H15
2.2 dT	D	2188	G8T	ES	10/96 ▸ 06/00	7700111298	**699079**		**699579**	SD7H15
2.2 dT	D	2188	G8T		07/98 ▸ 06/00	7700859676	**699003**			SD7H15
ESPACE III (2000>2002)										
2.0 i 16V	E	1998	F4R	ES	07/00 ▸ 10/02	7700111289	**699088**		**699588**	SD7H15
3.0 i V6	E	2946	L7X	ES	07/00 ▸ 10/02			7701499857	**699596**	SD7H15
1.9 dTi	D	1870	F9Q	ES	07/00 ▸ 10/02	7700111289	**699088**		**699588**	SD7H15
2.2 dCi	D	2188	G9T	ES	07/00 ▸ 10/02	7700105765	**699143** ⊃MQ	7701499860	**699643**	V5
ESPACE IV (2002>2006)										
2.0 i 16V, 2.0 i Turbo 16V	E	1998	F4R	ES	09/02 ▸	8200067915			**699860**	CVC
2.0 i Turbo 16V	E	1998	F4R	ES	04/05 ▸	8200436108			**813635**	CVC
1.9 dCi	D	1870	F9Q	ES	09/02 ▸	8200067915			**699860**	CVC
2.2 dCi 16V	D	2188	G9T	ES	09/02 ▸	8200067915			**699860**	CVC
ESPACE IV (2006>)										
2.0 dCi 16V ▸ 070912	D	1995	M9R	ES	03/06 ▸ 09/07	8200577732	**813125**	8200577732	**813625**	DCS17IC
2.0 dCi 16V 070912 ▸	D	1995	M9R	ES	03/06 ▸		**813144**	8200454172	**813644**	KC-88

• **New** Nouveau **Neu** Nuevo **Novo** Nuovo **Nieuw** Nowi **Новый** Novy **Nou** Yeni **Νέους**

⊃MQ : **Valeo Matching Quality** Valeo gleichwertige Qualität **Valeo Calidad Equivalente**
Część Valeo o Jakości Porównywalnej z Oryginałem

Use technical code cross-list for precise selection page 648
Utiliser les pages Cross-List (page 648) pour identifier la bonne référence
Verwenden Sie die Code-Vergleichsliste zur gezielten Suche des adäquaten Bauteils, Seite 648
Utilizar la lista de códigos cruzados para una selección precisa, página 648
Utilizzare la crosslist dei codici tecnici per una scelta precisa, pag. 648
Gebruik de lijst met verwijzingen naar de technische 648 voor de juiste keuze, op pagina 648
U yj listy kodów technicznych Valeo na stronie 648 dla precyzyjnego doboru
A se folosi paginile crosslist ca sa identifiati referita corecta
Χρησιμοποιήστε την λίστα αντιστοιχίων κωδικών για να κάνετε σωστή και ακριβή επιλογή, σελίδα 648

		cc				OE NEW	Valeo NEW	OE ES	Valeo ES	
RENAULT (.../...)										
ESPACE IV (2006>) (.../...)										
2.2 dCi 16V	D	2188	G9T	ES	03/06 ▸	8200436108			**813635**	CVC
KOLEOS										
2.0 dCi 16V	D	1995	M9R830/F,M9R833/F M9R836,M9R850 M9R856		06/08 ▸	926007877R	•**813339**			DKS17D
LAGUNA (94>98)										
1.8	E	1794	F3P		01/94 ▸ 04/98	7700859676	**699003**			SD7H15
2.0	E	1998	F3R		01/94 ▸ 04/98	7700859676	**699003**			SD7H15
3.0 V6	E	2946	L7X	ES	05/97 ▸ 04/98			7701499857	**699596**	SD7H15
2.2 D	D	2188	G8T	ES	03/94 ▸ 11/95			7701499835	**699540**	SD7H15
2.2 D, 2.2 Dt	D	2188	G8T	ES	11/95 ▸ 04/98	7700111298	**699079**		**699579**	SD7H15
LAGUNA (98>2000)										
1.8 i GPL	G	1794	F3P	ES	05/98 ▸ 12/00	7700111289	**699088**		**699588**	SD7H15
1.6 i 16V	E	1598	K4M	ES	05/98 ▸ 12/00	7700111036	**699092**		**699592**	SD7H15
1.8 i 16V	E	1783	F4P	ES	09/98 ▸ 12/00	7700111289	**699088**		**699588**	SD7H15
1.8 i	E	1794	F3P	ES	09/99 ▸ 12/00	7700111289	**699088**		**699588**	SD7H15
2.0 i, 2.0 i 16V	E	1998	F3R, F4R	ES	05/98 ▸ 12/00	7700111289	**699088**		**699588**	SD7H15
3.0 i V6	E	2946	L7X	ES	05/98 ▸ 12/00			7701499857	**699596**	SD7H15
1.9 dCi, 1.9 dTi	D	1870	F9Q	ES	05/98 ▸ 12/00	7700111289	**699088**		**699588**	SD7H15
2.2 dT	D	2188	G8T	ES	05/98 ▸ 12/00	7700111298	**699079**		**699579**	SD7H15
LAGUNA II										
1.6 i 16V, 1.6 i GPL 16V	E	1598	K4M	ES	01/01 ▸	8200024397	**699241**		**699741**	V5
1.8 i 16V	E	1783	F4P	ES	01/01 ▸ 02/05	8200021822	**699240**		**699740**	V5
1.8 i 16V	E	1783	F4P	ES	03/05 ▸	8200678509			**813633**	V5
2.0 i 16V, 2.0 ide 16V	E	1998	F4R, F5R	ES	01/01 ▸ 02/05	8200021822	**699240**		**699740**	V5
2.0 i 16V, 2.0 i Turbo 16V	E	1998	F4R, F5R	ES	03/05 ▸	8200678509			**813633**	V5
2.0 i 16V, 2.0 i Turbo 16V	E	1998	F4R	ES	03/05 ▸	8200678507			**813634**	V5
3.0 i V6 24V	E	2946	L7X		03/05 ▸	9642800780	**813220**			SD7V16
3.0 i V6 24V	E	2946	L7X	ES	03/05 ▸ 09/07		**813125**	8200705022	**813625**	DCS17IC
1.9 dCi	D	1870	F9Q	ES	01/01 ▸ 02/05	8200021822	**699240**		**699740**	V5
1.9 dCi	D	1870	F9Q	ES	03/05 ▸	8200678509			**813633**	V5
1.9 dCi	D	1870	F9Q	ES	03/05 ▸	8200678507			**813634**	V5
2.0 dCi, 2.0 dCi 16V ▸070102	D	1995	M9R		07/05 ▸	8200577732	**813125**			DCS17IC
2.0 dCi, 2.0 dCi 16V ▸070102	D	1995	M9R	ES	07/05 ▸ 09/07		**813125**	8200705022	**813625**	DCS17IC
2.2 dCi 16V	D	2188	G9T	ES	01/01 ▸ 02/05	8200021822	**699240**		**699740**	V5
2.2 dCi, 2.2 dCi 16V	D	2188	G9T	ES	03/05 ▸	8200678509			**813633**	V5
LAGUNA III (2007>)										
1.6 i 16V	E	1598	K4M	ES	10/07 ▸		**813147**	8200898810	**813647**	KC-88
2.0 i Ethanol 16V	F	1997	M4R	ES	07/09 ▸		**813149**	8200909753	**813649**	KC-88
2.0 16V	E	1997	M4R	ES	10/07 ▸	8200720780	**813149**	8200909753	**813649**	KC-88
1.5 dCi	D	1461	K9K	ES	10/07 ▸	8200720417	**813147**	8200720417	**813647**	KC-88
2.0 dCi	D	1995	M9R	ES	10/07 ▸	8200561276	**813145**	8200561276	**813645**	KC-88
3.0 dCi V6 24V	D	2993	V9X	ES	10/08 ▸		**813145**	8200890987	**813645**	KC-88
LAGUNA III (2010>)										
2.0 i 140 16V	F	1997	M4R	ES	11/10 ▸		**813145**	8200890987	**813645**	KC-88
2.0 i 140 16V	F	1997	M4R	ES	11/10 ▸		**813149**	8200909753	**813649**	KC-88
1.5 dCi 110	D	1461	K9K	ES	11/10 ▸		**813145**	8200890987	**813645**	KC-88
1.5 dCi 110	D	1461	K9K	ES	11/10 ▸		**813147**	8200898810	**813647**	KC-88
2.0 dCi 16V	D	1995	M9R	ES	11/10 ▸		**813145**	8200890987	**813645**	KC-88

You must replace the receiver drier with the compressor
Vous devez remplacer la bouteille déshydratante avec le compresseur
Tauschen Sie den Trockner mit dem Kompressor
Es obligatorio cambiar el Filtro Deshidratante con el Compresor
Tem de substituir o filtro desidratante com o compressor
E' necessario cambiare il filtro disidratatore con il compressore
U moet de filterdroger samen met de compressor vervangen
Musisz wymienić filtr osuszacz przy wymianie sprę arki
Рекомендируем замену осушителя вместо с компрессором
Při výměně kompresoru je nutné vyměnit také vysoušeč
Nu untați sa schimbați uscatorul cu compresorul
Kompresörle birlikte nem alıcıyı da değiştirin
Πρέπει να αντικαταστήσετε το φίλτρο υγρού μαζί με το συμπιεστή

		CC				OE NEW	Valeo NEW	OE ES	Valeo ES	
RENAULT (.../...)										
LAGUNA III (2010>) (.../...)										
3.0 dCi V6-235 24V	D	2993	V9X	ES	11/10 ▸		**813145**	8200890987	**813645**	KC-88
LATITUDE										
2,0 i	E	1998	M4R	ES	05/09 ▸	8200835879	**813264**		**•813764**	DCS17
2.0 dCi 16V	D	1995	M9R	ES	11/10 ▸	8200848916	**813265**		**•813765**	DCS17
LUTECIA (JAP)										
1.4 i	E	1390	E7J	ES	03/96 ▸ 02/98	7700272497	**699039**	7701499819	**699539**	SD7V16
1.8 i	E	1794	F3P	ES	10/94 ▸ 02/96	7700861779			**699618**	SD709
MÉGANE (95>99)										
1.4 i ▸ 960611	E	1390	E7J	ES	11/95 ▸ 06/96	7700866491	**699036**		**699536**	SD7V16
1.4 i 960611 ▸ 971001	E	1390	E7J	ES	06/96 ▸ 10/97	7700272987	**699094**	7701499820	**699594**	SD7V16
1.4 i 971001 ▸	E	1390	E7J	ES	10/97 ▸ 02/99	7700273320		7701499852	**699657**	V5
1.4 i 16V	E	1390	K4J	ES	09/98 ▸ 02/99	7700866828	**699045**	7701499844	**699545**	SD7V16
1.6 i ▸ 960611	E	1598	K7M	ES	11/95 ▸ 06/96	7700866491	**699036**		**699536**	SD7V16
1.6 i	E	1598	K7M	ES	11/95 ▸ 02/99	7700273320		7701499852	**699657**	V5
1.6 i 960611 ▸ 971001	E	1598	K7M	ES	06/96 ▸ 10/97	7700272987	**699094**	7701499820	**699594**	SD7V16
1.6 i 971001 ▸	E	1598	K7M	ES	10/97 ▸ 02/99	7700273320		7701499852	**699657**	V5
2.0 i ▸ 960611	E	1998	F3R	ES	11/95 ▸ 06/96	7700866491	**699036**		**699536**	SD7V16
2.0 i 16V	E	1998	F7R	ES	11/95 ▸ 02/99	7700866530	**699093**		**699593**	SD7V16
2.0 i	E	1998	F3R	ES	11/95 ▸ 02/99	7700866828	**699045**	7701499844	**699545**	SD7V16
2.0 i 960611 ▸ 971001	E	1998	F3R	ES	06/96 ▸ 06/97	7700272987	**699094**	7701499820	**699594**	SD7V16
1.9 dTi ▸ 960611	D	1870	F9Q	ES	11/95 ▸ 06/96	7700866491	**699036**		**699536**	SD7V16
1.9 dTi 960611 ▸ 971001	D	1870	F9Q	ES	06/96 ▸ 06/97	7700272987	**699094**	7701499820	**699594**	SD7V16
1.9 D, 1.9 dT, 1.9 dTi	D	1870	F8Q, F9Q	ES	11/95 ▸ 02/99	7700866828	**699045**	7701499844	**699545**	SD7V16
1.9 dTi 980420 ▸	D	1870	F9Q	ES	04/98 ▸ 02/99	7700105765	**699143** ⊃MQ	7701499860	**699643**	V5
MÉGANE (98>)										
1.4 i, 1.4 i 16V ▸ 001215	E	1390	E7J, K4J	ES	02/99 ▸ 12/00	7700103536	**699197**	7701499859	**699697**	V5
1.4 i 16V 001215 ▸	E	1390	K4J	ES	12/00 ▸ 08/02	8200316164	**699246**	7711135105	**699746**	CVC
1.6 i	E	1598	K7M	ES	02/99 ▸ 10/00	7700273320		7701499852	**699657**	V5
1.6 i 16V ▸ 001215	E	1598	K4M	ES	02/99 ▸ 12/00	7700103536	**699197**	7701499859	**699697**	V5
1.6 i 16V 001215 ▸	E	1598	K4M	ES	12/00 ▸ 08/02	8200316164	**699246**	7711135105	**699746**	CVC
1.9 D, 1.9 dCi, 1.9 dTi	D	1870	F8Q, F9Q	ES	02/99 ▸ 08/02	7700105765	**699143** ⊃MQ	7701499860	**699643**	V5
MÉGANE II (2002>)										
1.4 i 16V	E	1390	K4J	ES	09/02 ▸ 05/03	8200316164	**699246**	7711135105	**699746**	CVC
1.4 i 16V 050909 ▸	E	1390	K4J	ES	09/05 ▸			8200470242	**813828**	CVC016
1.6 i 16V	E	1598	K4M	ES	09/02 ▸ 05/03	8200316164	**699246**	7711135105	**699746**	CVC

• **New** Nouveau **Neu** Nuevo **Novo** Nuovo **Nieuw** Nowi **Новый** Novy **Nou** Yeni **Νέους**

⊃MQ : **Valeo Matching Quality** Valeo gleichwertige Qualität **Valeo Calidad Equivalente** Część Valeo o Jakości Porównywalnej z Oryginałem

Use technical code cross-list for precise selection page 648
Utiliser les pages Cross-List (page 648) pour identifier la bonne référence
Verwenden Sie die Code-Vergleichsliste zur gezielten Suche des adäquaten Bauteils, Seite 648
Utilizar la lista de códigos cruzados para una selección precisa, página 648
Utilizzare la crosslist dei codici tecnici per una scelta precisa, pag. 648
Gebruik de lijst met verwijzingen naar de technische 648 voor de juiste keuze, op pagina 648
U yj listy kodów technicznych Valeo na stronie 648 dla precyzyjnego doboru
A se folosi paginile crosslist ca sa identifiati referita corecta
Χρησιμοποιήστε την λίστα αντιστοιχίων κωδικών για να κάνετε σωστή και ακριβή επιλογή, σελίδα 648

		cc				OE NEW	Valeo NEW	OE ES	Valeo ES	
RENAULT (.../...)										
MÉGANE II (2002>) (.../...)										
1.6 i 16V 050909 ▸	F	1598	K4M	ES	09/05 ▸			8200600110	**813828**	CVC016
1.6 i 16V	E	1598	K4M	ES	09/05 ▸			8200940837	**813828**	CVC016
2.0 i 16V ▸ 050824	E	1998	F4R	ES	09/02 ▸ 08/05	8200309193			**699766**	CVC
2.0 i Turbo 16V ▸ 050719	E	1998	F4R	ES	09/02 ▸ 08/05	8200309193			**699766**	CVC
2.0 i 16V, 2.0 i Turbo 16V 050502 ▸	E	1998	F4R		05/05 ▸	8200678499	**813222**			CVC5
2.0 i 16V,2.0 i Turbo 16V	E	1998	F4R	ES	07/05 ▸			7711497517	**813825**	CVC085
1.5 dCi ▸ 030520	D	1461	K9K	ES	09/02 ▸ 05/03	8200316164	**699246**	7711135105	**699746**	CVC
1.5 dCi 050909 ▸	D	1461	K9K	ES	09/05 ▸			8200600110	**813828**	CVC016
1.9 dCi ▸ 050824	D	1870	F9Q	ES	09/02 ▸ 08/05	8200309193			**699766**	CVC
MÉGANE II										
1.9 dCi	D	1870	F9Q	ES	09/02 ▸			7711368037	•**813705**	V5
MÉGANE II (2002>)										
1.9 dCi 050822 ▸	D	1870	F9Q		06/04 ▸	8200678499	**813222**			CVC5
1.9 dCi	D	1870	F9Q	ES	09/08 ▸			7711497517	**813825**	CVC085
MÉGANE III (2008>)										
2.0 i 16V	E	1997	M4R	ES	10/08 ▸	8200869742	**813263**		•**813763**	DCS17
1.5 dCi	D	1461	K9K	ES	07/09 ▸	8200869742	**813263**		•**813763**	DCS17
MÉGANE SCÉNIC (96>99)										
1.4 i ▸ 971001	E	1390	E7J	ES	10/96 ▸ 10/97	7700272987	**699094**	7701499820	**699594**	SD7V16
1.4 i, 1.4 i 16V 971001 ▸	E	1390	E7J, K4J	ES	10/97 ▸ 09/99	7700273320		7701499852	**699657**	V5
1.6 i	E	1598	K7M	ES	10/96 ▸ 09/97	7700272987	**699094**	7701499820	**699594**	SD7V16
1.6 i	E	1598	K7M	ES	09/97 ▸ 09/99	7700273320		7701499852	**699657**	V5
2.0 i	E	1998	F3R	ES	10/96 ▸ 09/99	7700866828	**699045**	7701499844	**699545**	SD7V16
1.9 D, 1.9 dT, 1.9 dTi	D	1870	F8Q, F9Q	ES	10/96 ▸ 09/99	7700866828	**699045**	7701499844	**699545**	SD7V16
1.9 D, 1.9 dTi 980529 ▸	D	1870	F8Q, F9Q	ES	04/98 ▸ 09/99	7700105765	**699143** ⊃MQ	7701499860	**699643**	V5
MÉGANE SCÉNIC (99>2003)										
1.4 i 16V	E	1390	K4J	ES	09/99 ▸ 04/03	7700103536	**699197**	7701499859	**699697**	V5
1.6 i 16V	E	1598	K4M	ES	09/99 ▸ 04/03	7700103536	**699197**	7701499859	**699697**	V5
1.8 i 16V	E	1783	F4P	ES	09/99 ▸ 04/03	7700105765	**699143** ⊃MQ	7701499860	**699643**	V5
2.0 i 16V	E	1998	F4R	ES	09/99 ▸ 04/03	7700105765	**699143** ⊃MQ	7701499860	**699643**	V5
1.9 dCi, 1.9 dTi	D	1870	F9Q	ES	09/99 ▸ 04/03	7700105765	**699143** ⊃MQ	7701499860	**699643**	V5
MODUS (2004>2007)										
1.2 i 16V	E	1149	D4F	ES	09/04 ▸	8200357173	**813132**		**813632**	SD6V12
1.4 i 16V ▸ 060901	E	1390	K4J	ES	09/04 ▸ 12/07	8200365787	**813131**		**813631**	SD6V12
1.4 i 16V ▸ 060901	E	1390	K4J	ES	09/06 ▸	8200651251	**813165**	7711497298	•**813665**	SD6V12

You must replace the receiver drier with the compressor
Vous devez remplacer la bouteille déshydratante avec le compresseur
Tauschen Sie den Trockner mit dem Kompressor
Es obligatorio cambiar el Filtro Deshidratante con el Compresor
Tem de substituir o filtro desidratante com o compressor
E' necessario cambiare il filtro disidratatore con il compressore
U moet de filterdroger samen met de compressor vervangen
Musisz wymienić filtr osuszacz przy wymianie sprę arki
Рекомендируем замену осушителя вместо с компрессором
Při výměně kompresoru je nutné vyměnit také vysoušeč
Nu untați sa schimbați uscatorul cu compresorul
Kompresörle birlikte nem alıcıyı da değiştirin
Πρέπει να αντικαταστήσετε το φίλτρο υγρού μαζί με το συμπιεστή

		cc				OE NEW	Valeo NEW	OE ES	Valeo ES	
RENAULT (.../...)										
MODUS (2004>2007) (.../...)										
1.6 i 16V ▸060901	E	1598	K4M	ES	09/04 ▸	8200365787	**813131**		**813631**	SD6V12
1.6 i 16V ▸060901	E	1598	K4M	ES	09/06 ▸	8200651251	**813165**	7711497298	**•813665**	SD6V12
1.5 dCi ▸060901	D	1461	K9K	ES	09/04 ▸	8200365787	**813131**		**813631**	SD6V12
1.5 dCi, 1.5 dCi 105 FAP ▸060901	D	1461	K9K	ES	09/04 ▸	8200651251	**813165**	7711497298	**•813665**	SD6V12
MODUS (2008>)										
1.4 i 100 16V	E	1390	K4J	ES	01/08 ▸	8200651251	**813165**	7711497298	**•813665**	SD6V12
1.6 i 110 16V	E	1598	K4M	ES	01/08 ▸	8200866437	**813165**	7711497298	**•813665**	SD6V12
1.5 dCi 105,1.5 dCi 65 1.5 dCi 70,1.5 dCi 85	D	1461	K9K	ES	01/08 ▸	8200866437	**813165**	7711497298	**•813665**	SD6V12
SAFRANE										
2.0 Si, 2.0 i	E	1995	J7R	ES	05/92 ▸ 09/96	7700852705			**699502**	SD709
2.0 Si, 2.0 i	E	1995	J7R	ES	05/92 ▸ 09/96	7700871663			**699543**	SD7H15
2.2 Si, 2.2 i	E	2165	J7T	ES	05/92 ▸ 09/96	7700852705			**699502**	SD709
2.2 Si, 2.2 i	E	2165	J7T	ES	05/92 ▸ 09/96	7700871663			**699543**	SD7H15
3.0 i	E	2963	Z7X	ES	09/96 ▸ 12/98	7700865327		7701499842	**699660**	SD7H15
3.0 i	E	2946	L7X	ES	12/98 ▸ 11/00			7701499857	**699596**	SD7H15
3.0 i V6, 3.0 i V6i 3.0 i V6i Biturbo	E	2975	Z7X	ES	05/92 ▸ 09/96			7700260894	**699506**	SD7H15
3.0 i V6, 3.0 i V6i 3.0 i V6i Biturbo	E	2975	Z7X	ES	09/96 ▸ 12/98	7700865327		7701499842	**699660**	SD7H15
2.1 Dt	D	2068	J8S	ES	05/92 ▸ 09/96	7700871664			**699534**	SD709
2.2 TD	D	2188	G8T	ES	09/96 ▸ 11/00	7700112299	**699057**		**699557**	SD7H15
2.5 Dt	D	2445	S8U	ES	04/93 ▸ 09/96	7700868578			**699589**	SD7H15
SCÉNIC II										
1.4 i 16V ▸050909 ▸	E	1390	K4J	ES	09/05 ▸			8200600110	**813828**	CVC016
1.6 i GPL 16V	F	1598	K4M	ES	09/05 ▸			8200940837	**813828**	CVC016
1.6 i 16V	E	1598	K4M	ES	09/05 ▸			8200940837	**813828**	CVC016
1.6 i 16V ▸030520	E	1598	K4M	ES	05/03 ▸	8200050141	**699246**	7711135105	**699746**	CVC
2.0 i 16V, 2.0 i Turbo 16V	E	1998	F4R	ES	05/03 ▸	8200309193			**699766**	CVC
2.0 i 16V, 2.0 i Turbo 16V ▸050502 ▸	E	1998	F4R		05/05 ▸	8200678499	**813222**			CVC5
2.0 i 16V,2.0 i Turbo 16V	E	1998	F4R	ES	05/05 ▸			7711497517	**813825**	CVC085
1.5 dCi ▸050909 ▸	D	1461	K9K	ES	09/05 ▸			8200600110	**813828**	CVC016
1.9 dCi	D	1870	F9Q	ES	09/02 ▸			7711368037	**•813705**	V5
1.9 dCi	D	1870	F9Q	ES	08/05 ▸			7711497517	**813825**	CVC085
1.9 dCi	D	1870	F9Q	ES	05/03 ▸	8200309193			**699766**	CVC
1.9 dCi ▸050824 ▸	D	1870	F9Q		05/03 ▸	8200678499	**813222**			CVC5
2.0 i 140 16V	E	1997	M4R	ES	04/09 ▸	8200869742	**813263**		**•813763**	DCS17
SYMBOLE - THALIA (2008>)										
1.6 i	E	1598	K7M	ES	10/08 ▸			7711497531	**813827**	SD7V16
TWINGO (93>98)										
1.2	E	1239	C3G	ES	03/93 ▸ 01/97			7701499837	**699537**	SD7H15
1.2 i	E	1149	D7F	ES	07/96 ▸ 08/98	7700106069	**699059**		**699559**	SD7V16

		CC				OE NEW	Valeo NEW	OE ES	Valeo ES	
RENAULT (.../...)										
TWINGO (98>)										
1.2 i GPL ▸990611	G	1149	D7F	ES	10/98 ▸ 06/99	7700106069	**699059**		**699559**	SD7V16
1.2 i GPL 990611 ▸	G	1149	D7F	ES	06/99 ▸ 08/04	8200037058	**699234**		**699734**	SD6V12
1.2 i ▸990611	E	1149	D7F	ES	09/98 ▸ 06/99	7700106069	**699059**		**699559**	SD7V16
1.2 i, 1.2 i 16V	E	1149	D4F, D7F	ES	06/99 ▸ 08/04	8200037058	**699234**		**699734**	SD6V12
TWINGO (2007>)										
1.2 i 16V	E	1149	D4F	ES	07/07 ▸	8200819568	**813132**		**813632**	SD6V12
1.6 i 16V	E	1598	K4M	ES	06/08 ▸	8200651251	**813165**	7711497298	•**813665**	SD6V12
1.5 dCi	D	1461	K9K	ES	07/07 ▸	8200651251	**813165**	7711497298	•**813665**	SD6V12
VEL SATIS (2002>2005)										
2.0 i Turbo 16V	E	1998	F4R	ES	01/02 ▸ 01/05	8200021822	**699240**		**699740**	V5
2.2 dCi 16V	D	2188	G9T	ES	01/02 ▸ 01/05	8200021822	**699240**		**699740**	V5
VEL SATIS (2005>)										
2.0 i Turbo 16V	E	1998	F4R	ES	02/05 ▸	8200678507			**813634**	V5
2.0 dCi FAP 16V	D	1995	M9R	ES	01/06 ▸	8200577732	**813125**	8200705022	**813625**	DCS17IC
WIND										
1.2 TCE 100 16V	E	1149	D4F	ES	07/10 ▸	8200819568	**813132**		**813632**	SD6V12
RENAULT										
KANGOO (97>2003)										
1.2 i	E	1149	D7F	ES	09/97 ▸ 02/03	7700106069	**699059**		**699559**	SD7V16
1.4 i	E	1390	E7J	ES	09/97 ▸ 02/03	7700875357	**699144**	7701499858	**699644**	SD7V16
1.4 i	E	1390	E7J	ES	02/99 ▸ 02/03	8200315744	**699218**		**699718**	SD6V12
1.6 i	E	1598	K7M	ES	12/99 ▸ 02/03	8200315744	**699218**		**699718**	SD6V12
1.9 D ▸981223	D	1870	F8Q	ES	09/97 ▸ 12/98	7700100417	**699107**	7701499850	**699607**	SD7V16
1.9 D, 1.9 DTi 981223 ▸	D	1870	F8Q, F9Q	ES	12/98 ▸ 02/03	7700111235	**699191**		**699691**	SD6V12
KANGOO (2003>)										
1.2 i	E	1149	D7F	ES	03/03 ▸	7700106069	**699059**		**699559**	SD7V16
1.2 i, 1.2 i 16V	E	1149	D4F, D7F	ES	03/03 ▸	8200037058	**699234**		**699734**	SD6V12
1.4 i	E	1390	K7J	ES	03/03 ▸	8200315744	**699218**		**699718**	SD6V12
1.6 i 16V	E	1598	K4M	ES	03/03 ▸	8200315744	**699218**		**699718**	SD6V12
1.5 dCi	D	1461	K9K	ES	03/03 ▸	8200315744	**699218**		**699718**	SD6V12
1.9 D, 1.9 dCi, 1.9 dTi	D	1870	F8Q, F9Q	ES	03/03 ▸	7700111235	**699191**		**699691**	SD6V12
KANGOO (2007>)										
1.6 i 16V	E	1598	K4M	ES	11/07 ▸	8200866437	**813165**	7711497298	•**813665**	SD6V12
1.5 dCi	D	1461	K9K	ES	11/07 ▸	8200866437	**813165**	7711497298	•**813665**	SD6V12
MASCOTT										
3.0 DXi3 16V	D	2953	ZD3.6.00 ZD3.6.04		05/04 ▸	8200201422	**813129**			SD7V16
MASTER (97>2003)										
2.2 dCi	D	2188	G9T	ES	11/00 ▸ 09/03	7700105765	**699143** ⊃MQ	7701499860	**699643**	V5

You must replace the receiver drier with the compressor
Vous devez remplacer la bouteille déshydratante avec le compresseur
Tauschen Sie den Trockner mit dem Kompressor
Es obligatorio cambiar el Filtro Deshidratante con el Compresor
Tem de substituir o filtro desidratante com o compressor
E' necessario cambiare il filtro disidratatore con il compressore
U moet de filterdroger samen met de compressor vervangen

Musisz wymienić filtr osuszacz przy wymianie sprę arki
Рекомендируем замену осушителя вместо с компрессором
Při výměně kompresoru je nutné vyměnit také vysoušeč
Nu untați sa schimbați uscatorul cu compresorul
Kompresörle birlikte nem alıcıyı da değiştirin
Πρέπει να αντικαταστήσετε το φίλτρο υγρού μαζί με το συμπιεστή

		cc				OE NEW	Valeo NEW	OE ES	Valeo ES	
RENAULT (.../...)										
MASTER (97>2003) (.../...)										
2.5 dCi	D	2463	G9U	ES	12/00 ▸ 09/03	7700105765	**699143** ⊃MQ	7701499860	**699643**	V5
MASTER (2003>)										
1.9 dCi	D	1870	F9Q	ES	10/03 ▸	7700105765	**699143** ⊃MQ	7701499860	**699643**	V5
2.5 dCi	D	2463	G9U	ES	10/03 ▸	7700105765	**699143** ⊃MQ	7701499860	**699643**	V5
3.0 dCi	D	2953	ZD3		10/03 ▸	8200201422	**813129**			SD7V16
MASTER (2010>)										
2.3 dCi 16V	D	2298	M9T	ES	04/10 ▸	8200848916	**813265**		•**813765**	DCS17
TRAFIC II (2001>)										
2.0 i 16V	E	1998	F4R	ES	04/01 ▸	7700105765	**699143** ⊃MQ	7701499860	**699643**	V5
1.9 dCi	D	1870	F9Q	ES	04/01 ▸	7700105765	**699143** ⊃MQ	7701499860	**699643**	V5
2.0 dCi	D	1995	M9R	ES	07/06 ▸	8200454172	**813144**	8200454172	**813644**	KC-88
RENAULT										
MAGNUM E-TECH										
Magnum 400, 440, 480	D	12000	A/46, B/46, C/46		05/00 ▸	5010483009	**813007**			SD7H15
MIDLUM										
150, 180	D	4120	4C, DCI 4B		10/01 ▸	5010417679	**813023**			SD7H15
210	D	6177	DCI 6W		01/00 ▸	5010417679	**813023**			SD7H15
PREMIUM										
300	D	9839	06.20.45 D/41		04/96 ▸	5010417679	**813023**			SD7H15
320, 370	D	11100	DCI 11E, DCI 11G		08/00 ▸	5010417679	**813023**			SD7H15
320, 370	D	11100	DCI 11E, DCI 11G		08/00 ▸	5010483099	**813025**			SD7H15
400	D	11100	06.23.56 B/41		01/00 ▸	5010417679	**813023**			SD7H15
420	D	11100	DCI 11C		08/00 ▸	5010417679	**813023**			SD7H15
420	D	11100	DCI 11C		08/00 ▸	5010483099	**813025**			SD7H15
ROVER										
25 (99>2003)										
1.4 i 16V ▸ YD471564	E	1396	14K4F4	ES	12/99 ▸ 01/00	JPB100760	**699109**		**699609**	SD7V16
1.4 i 16V YD633802 ▸	E	1396	14K4F4		01/00 ▸ 07/04	JPB000150	**699314**			SD7V16
1.6 i 16V ▸ YD471564	E	1588	16K4F4	ES	12/99 ▸ 01/00	JPB100760	**699109**		**699609**	SD7V16
1.6 i 16V YD633802 ▸	E	1588	16K4F4		01/00 ▸ 07/04	JPB000150	**699314**			SD7V16
1.8 i 16V ▸ YD471564	E	1796	18K16, 18K4	ES	12/99 ▸ 01/00	JPB100760	**699109**		**699609**	SD7V16
1.8 i 16V YD633802 ▸	E	1796	18K16, 18K4		01/00 ▸ 07/04	JPB000150	**699314**			SD7V16
2.0 D ▸ 471584	D	1996	20L2N	ES	12/99 ▸ 01/00	JPB100680			**699720**	SD7V16
25 (2004>)										
1.1 i 16V	E	1119	11K4F4		08/04 ▸ 04/05	JPB000150	**699314**			SD7V16

• **New** Nouveau **Neu** Nuevo **Novo** Nuovo **Nieuw** Nowi **Новый** Novy **Nou** Yeni **Νέους**

⊃MQ : **Valeo Matching Quality** Valeo gleichwertige Qualität **Valeo Calidad Equivalente**
Część Valeo o Jakości Porównywalnej z Oryginałem

Use technical code cross-list for precise selection page 648
Utiliser les pages Cross-List (page 648) pour identifier la bonne référence
Verwenden Sie die Code-Vergleichsliste zur gezielten Suche des adäquaten Bauteils, Seite 648
Utilizar la lista de códigos cruzados para una selección precisa, página 648
Utilizzare la crosslist dei codici tecnici per una scelta precisa, pag. 648
Gebruik de lijst met verwijzingen naar de technische 648 voor de juiste keuze, op pagina 648
U yj listy kodów technicznych Valeo na stronie 648 dla precyzyjnego doboru
A se folosi paginile crosslist ca sa identifiati referita corecta
Χρησιμοποιήστε την λίστα αντιστοιχίων κωδικών για να κάνετε σωστή και ακριβή επιλογή, σελίδα 648

						OE NEW	Valeo NEW	OE ES	Valeo ES	
		cc								
ROVER (.../...)										
25 (2004>) (.../...)										
1.4 i 16V	E	1396	14K4F4		08/04 ▸ 04/05	JPB000150	**699314**			SD7V16
1.6 i 16V	E	1588	16K4F4		08/04 ▸ 04/05	JPB000150	**699314**			SD7V16
1.8 i 16V	E	1796	18K4		08/04 ▸ 04/05	JPB000150	**699314**			SD7V16
45 (2000>2004)										
1.4 i 16V YD572555 ▸	E	1396	14K4F4		01/00 ▸ 05/04	JPB000150	**699314**			SD7V16
1.8 i 16V YD572555 ▸	E	1796	18K4F		01/00 ▸ 05/04	JPB000150	**699314**			SD7V16
2.0 i V6 24V	E	1997	20K6F	ES	01/00 ▸ 05/04	JPB000040A		JPB000040A	•**813832**	7SB16C
2.0 iDT ▸ 471063	D	1994	20T2N	ES	01/00 ▸	JPB100680			**699720**	SD7V16
2.0 iDT 471064 ▸	D	1994	20T2N		01/00 ▸ 05/04	JPB101230	**699315**			SD7V16
75										
1.8 T 16V, 1.8 i 16V	E	1796	18K4F, 18K4K		03/04 ▸	JPB101460A	**699347**			PXV16
2.0 i V6 24V	E	1997	20K6F	ES	02/99 ▸	JPB101154		JPB000040A	•**813832**	7SB16C
2.5 i V6 24V	E	2497	25KV6,25KV6F	ES	02/99 ▸	JPB101154		JPB000040A	•**813832**	7SB16C
2.0 CDT 16V ▸ YM173442	D	1951	M47R	ES	02/99 ▸	JPB101161		JPB000040A	•**813832**	7SB16C
2.0 CDT, 2.0 CDTi	D	1951	204D2, M47R		04/99 ▸	JPB101460A	**699347**			PXV16
200 (95>99)										
211	E	1113	11K2F	ES	01/98 ▸ 11/99	JPB100760	**699109**		**699609**	SD7V16
214 ▸ YD471564	E	1396	14K2F, 14K4F4	ES	11/95 ▸ 12/99	JPB100760	**699109**		**699609**	SD7V16
214 633802 ▸	E	1396	14K2F, 14K4F4		11/95 ▸ 11/99	JPB000150	**699314**			SD7V16
216 ▸ YD471564	E	1589	16K4F4	ES	11/95 ▸ 12/99	JPB100760	**699109**		**699609**	SD7V16
216 633802 ▸	E	1589	16K4F4		11/95 ▸ 11/99	JPB000150	**699314**			SD7V16
220 ▸ YD471564	E	1796	18K16	ES	10/96 ▸ 12/99	JPB100760	**699109**		**699609**	SD7V16
220 633802 ▸	E	1796	18K16		10/96 ▸ 11/99	JPB000150	**699314**			SD7V16
220 ▸ YD471564	D	1994	20T2N, 20T2R	ES	11/95 ▸ 12/99	JPB100680			**699720**	SD7V16
200 (96>99)										
Cabriolet, Coupe	E	1589	16K4F4	ES	03/96 ▸	JPB100760	**699109**		**699609**	SD7V16
Coupe	E	1796	18K4K	ES	03/96 ▸	JPB100760	**699109**		**699609**	SD7V16
400 (95>)										
414 ▸ YD471063	E	1396	14K4F4	ES	05/95 ▸	JPB100760	**699109**		**699609**	SD7V16
414 YD471064 ▸	E	1396	14K4F4		05/95 ▸ 03/00	JPB101240	**699314**			SD7V16
416 YD471064 ▸	E	1589	16K4F4		05/95 ▸ 03/00	JPB101240	**699314**			SD7V16
416 ▸ YD471063	E	1589	16K4F4	ES	05/95 ▸	JPB100760	**699109**		**699609**	SD7V16
420 ▸ YD471063	E	1994	20T4H	ES	11/95 ▸	JPB100770			**699720**	SD7V16
420 ▸ 471063	D	1994	20T2N, 20T2R	ES	11/95 ▸	JPB100680			**699720**	SD7V16

You must replace the receiver drier with the compressor
Vous devez remplacer la bouteille déshydratante avec le compresseur
Tauschen Sie den Trockner mit dem Kompressor
Es obligatorio cambiar el Filtro Deshidratante con el Compresor
Tem de substituir o filtro desidratante com o compressor
E' necessario cambiare il filtro disidratatore con il compressore
U moet de filterdroger samen met de compressor vervangen
Musisz wymienić filtr osuszacz przy wymianie sprę arki
Рекомендируем замену осушителя вместо с компрессором
Při výměně kompresoru je nutné vyměnit také vysoušeč
Nu untați sa schimbați uscatorul cu compresorul
Kompresörle birlikte nem alıcıyı da değiştirin
Πρέπει να αντικαταστήσετε το φίλτρο υγρού μαζί με το συμπιεστή

		cc				OE NEW	Valeo NEW	OE ES	Valeo ES	
ROVER (.../...)										
400 (95>) (.../...)										
420 YD471064 ▸	D	1994	20T2N, 20T2R		11/95 ▸ 03/00	JPB101230	**699315**			SD7V16
600										
620 Ti Vitesse 206294 ▸	E	1994	20T4G	ES	07/94 ▸ 06/00	JPB100770			**699720**	SD7V16
620 SDI 206294 ▸	D	1994	20T2N	ES	12/94 ▸	JPB100680			**699720**	SD7V16
STREETWISE										
1.4 i 16V	E	1396	14K4F4		09/03 ▸	JPB000150	**699314**			SD7V16
SAAB										
9-3 (98>2002)										
2.0 i 16V, 2.0 i Turbo 16V	E	1985	B204I, B204L		04/98 ▸ 11/02	4635892	**699316**			TRS105
2.3 i 16V	E	2290	B234I		04/98 ▸ 11/02	4635892	**699316**			TRS105
2.2 TiD	D	2172	X22DTL		05/98 ▸ 11/02	4635892	**699316**			TRS105
9-3 (2002>)										
1.8 i 16V	E	1796	Z18XE	ES	01/03 ▸	13191995	**699317**	6854035	**699817**	PXV16
2.0 T Turbo 16V	E	1998	B207E, B207L B207R	ES	09/02 ▸	24411280	**699348**		**699848**	PXV16
2.8 T V6 24V ▸ 51030446	E	2796	B284L	ES	06/05 ▸	24411280	**699348**		**699848**	PXV16
1.9 TiD 16V ▸ 41019992	D	1910	Z19DT, Z19DTH	ES	06/04 ▸	13140505	**699355**		**699855**	PXV16
2.2 TiD 16V 31061630 ▸ 41019992	D	2171	D223L-125	ES	09/02 ▸	13140505	**699355**		**699855**	PXV16
2.2 TiD 16V	D	2171	D223L-125	ES	01/03 ▸ 12/05	13191995	**699317**	6854035	**699817**	PXV16
9-3 (2005>)										
2.8 TV6 24V	E	2792	B284L	ES	06/05 ▸	12792669			**813686**	PXV16
9-5 (97>2001)										
2.0 i Turbo 16V	E	1985	B205E, B205R		09/97 ▸ 08/01	5048368	**699346**			PXV16
2.3 i Turbo 16V	E	2290	B235E, B235L B235R		09/97 ▸ 08/01	5048368	**699346**			PXV16
3.0 i V6 Turbo 24V	E	2962	B308E		09/97 ▸ 08/01	5048368	**699346**			PXV16
9-5 (2001>)										
2.0 i Turbo 16V 33010533 ▸ 43516056	E	1985	B205E		01/03 ▸	5048368	**699346**			PXV16
2.3 T Turbo 16V **2.3 i Turbo 16V** 33010533 ▸ 43516056	E	2290	B235L		01/03 ▸	5048368	**699346**			PXV16
3.0 i V6 Turbo 24V 33010533 ▸ 43516056	E	2962	B308E		01/03 ▸ 08/03	5048368	**699346**			PXV16
1.9 TiD 16V	D	1910	Z19DTH		01/06 ▸	12756725	**813124**			DCS17IC
2.2 TiD 33010533 ▸ 43516056	D	2171	D223L		01/03 ▸	5048368	**699346**			PXV16
3.0 TiD V6 33010533 ▸ 43516056	D	2962	D308L		01/03 ▸	5048368	**699346**			PXV16
900 (79>93)										
2.0 i 16V	E	1985	B202I	ES	01/89 ▸ 07/93	4070801			**699597**	SD709

• **New** Nouveau **Neu** Nuevo **Novo** Nuovo **Nieuw** Nowi **Новый** Novy **Nou** Yeni **Νέους**

VMQ : Valeo Matching Quality Valeo gleichwertige Qualität **Valeo Calidad Equivalente**
Część Valeo o Jakości Porównywalnej z Oryginalem

Use technical code cross-list for precise selection page 648
Utiliser les pages Cross-List (page 648) pour identifier la bonne référence
Verwenden Sie die Code-Vergleichsliste zur gezielten Suche des adäquaten Bauteils, Seite 648
Utilizar la lista de códigos cruzados para una selección precisa, página 648
Utilizzare la crosslist dei codici tecnici per una scelta precisa, pag. 648
Gebruik de lijst met verwijzingen naar de technische 648 voor de juiste keuze, op pagina 648
U yj listy kodów technicznych Valeo na stronie 648 dla precyzyjnego doboru
A se folosi paginile crosslist ca sa identifiati referita corecta
Χρησιμοποιήστε την λίστα αντιστοιχίων κωδικών για να κάνετε σωστή και ακριβή επιλογή, σελίδα 648

		CC				OE NEW	Valeo NEW	OE ES	Valeo ES	
SAAB (.../...)										
9000										
2.0 i 16V, 2.0 Turbo	E	1985	B202I, B202L	ES	07/89 ▸ 07/93	4070801			**699597**	SD709
SCANIA										
94										
94.220, 94.260, 94.310	D	9000	DSC 9.11/9.12/9.13		02/96 ▸	1412264	**813016**			SD7H15
113										
113.340	D	10600	DC 11.01 DC 11.03		03/98 ▸	1412263	**699366**			SD7H15
114										
114.340	D	11000	DSC 11.79		05/96 ▸	1412263	**699366**			SD7H15
114.380	D	10600	DC 11.02		03/98 ▸	1412263	**699366**			SD7H15
124										
124.360	D	11700	DSC 12.02		09/96 ▸	1412263	**699366**			SD7H15
124.400	D	11700	DC 12.01		09/96 ▸	1412263	**699366**			SD7H15
124.420	D	11700	DC 12.01 DSC 12.05		09/97 ▸	1412263	**699366**			SD7H15
124.440, 124.470	D	11716	DT 12.02/12.08		01/01 ▸	1412263	**699366**			SD7H15
144										
144.460, 144.530	D	14200	DSC 14.13/14.15		09/95 ▸	1412263	**699366**			SD7H15
P										
P 340, P 380	D	10600	DC 11.08/11.09		09/04 ▸	1412263	**699366**			SD7H15
P 420	D	11716	DC 12.12/14/15		09/04 ▸	1412263	**699366**			SD7H15
R										
R 340, R 380	D	10600	DC 11.08 DC 11.09		03/04 ▸	1412263	**699366**			SD7H15
R 420, R 470	D	11716	DC 12.14 DT 12.06/1211		03/04 ▸	1412263	**699366**			SD7H15
R 500, R 580	D	15600	DT 16.03/16.04		03/04 ▸	1412263	**699366**			SD7H15
R 620	D	15600	DT 16.08		09/05 ▸	1412263	**699366**			SD7H15
T										
T 470	D	11716	DT 12.06		09/04 ▸ 10/05	1412263	**699366**			SD7H15
SEAT										
ALHAMBRA										
1.8 i , 1.8 i Turbo	E	1781	AJH, AWC	ES	06/00 ▸	7M3820803A	**813200** ⊃MQ		**813700**	SD7V16
1.8 i 20V, 1.8 i Turbo 20V	E	1781	AWC, AJH	ES	06/00 ▸	7M3820803A	•**813400**		**813700**	DCS17
2.0 i	E	1984	ADY	ES	03/96 ▸ 05/00	7M0820803P	**699115** ⊃MQ		**699615**	SD7V16
2.0 i	E	1984	ATM	ES	06/00 ▸	7M3820803A	**813200** ⊃MQ		**813700**	SD7V16
2.0 i	E	1984	ATM	ES	06/00 ▸	7M3820803A	•**813400**		**813700**	DCS17
2.8 i VR6 24V	E	2792	AUE, AYL	ES	06/00 ▸	7M3820803A	**813200** ⊃MQ		**813700**	SD7V16
2.8 i VR6 24V	E	2792	AYL	ES	06/00 ▸	7M3820803A	•**813400**		**813700**	DCS17
1.9 TDi	D	1896	1Z, AFN, AHU	ES	03/96 ▸ 05/00	7M0820803P	**699115** ⊃MQ		**699615**	SD7V16

You must replace the receiver drier with the compressor
Vous devez remplacer la bouteille déshydratante avec le compresseur
Tauschen Sie den Trockner mit dem Kompressor
Es obligatorio cambiar el Filtro Deshidratante con el Compresor
Tem de substituir o filtro desidratante com o compressor
E' necessario cambiare il filtro disidratatore con il compressore
U moet de filterdroger samen met de compressor vervangen

Musisz wymienić filtr osuszacz przy wymianie sprę arki
Рекомендируем замену осушителя вместо с компрессором
Při výměně kompresoru je nutné vyměnit také vysoušeč
Nu untaţi sa schimbaţi uscatorul cu compresorul
Kompresörle birlikte nem alıcıyı da değiştirin
Πρέπει να αντικαταστήσετε το φίλτρο υγρού μαζί με το συμπιεστή

		CC				OE NEW	Valeo NEW	OE ES	Valeo ES	

SEAT (.../...)

ALHAMBRA (.../...)

1.9 TDi	D	1896	ANU, ASZ, AUY	ES	06/00 ▸	7M3820803A	**813200** ⊃MQ		**813700**	SD7V16
1.9 TDi	D	1896	AUY, ANU, ASZ	ES	06/00 ▸	7M3820803A	•**813400**		**813700**	DCS17
2.0 TDi 16V	D	1968	BRT	ES	06/05 ▸	7M3820803A	**813200** ⊃MQ		**813700**	SD7V16
2.0 TDi 16V	D	1968	BRT	ES	06/05 ▸	7M3820803A	•**813400**		**813700**	DCS17

ALTEA

1.4 TSi 16V,1.4 i 16V 5P-8-023 329 ▸	E	1390	BXW,CAXC	ES	05/06 ▸	1K0820803N	**699357**	1K0820859M	**699857**	DCS17E
1.4 i 86 16V 5P-8-023 329 ▸	E	1390	BXW	ES	05/06 ▸ 03/09	1K0820859T		8J0260805	•**813838**	6SEU14C
1.6 i	E	1595	BGU, BSE, BSF	ES	03/04 ▸	1K0820803N	**699357**	1K0820803S	**699857**	DCS17E
1.6 i 102	E	1595	BSE,BSF	ES	05/05 ▸ 03/09	1K0820859T		8J0260805	•**813838**	6SEU14C
1.8 TFSi 16V	E	1798	BYT	ES	10/06 ▸	1K0820803N	**699357**	1K0820803N	**699857**	DCS17E
1.8 FSi 16V 5P-8-023 328 ▸ 5P-8-023 329	E	1798	BZB	ES	06/07 ▸	1K0820859H		8J0260805	•**813838**	6SEU14C
2.0 FSI 16V, 2.0 TFSI	E	1984	BLR, BLY, BVY BVZ, BWA	ES	03/04 ▸	1K0820803N	**699357**	1K0820803N	**699857**	DCS17E
1.9 TDi	D	1896	BJB,BKC,BLS,BXE	ES	04/04 ▸	1K0820803Q	**699357**	1K0820803S	**699857**	DCS17E
1.9 TDi	D	1896	BLS,BXE	ES	10/05 ▸ 03/09	5N0820803		8J0260805	•**813838**	6SEU14C
2.0 TDi 16V	D	1968	AZV,BKD,BMM/F,BMN	ES	03/04 ▸	1K0820803Q	**699357**	1K0820803N	**699857**	DCS17E

AROSA

1.0 i X-015 001 ▸	E	997	AHT	ES	11/98 ▸	6N0820803C	**699303**		•**699803**	SD6V12
1.0 i	E	999	AER, AHT, ALL	ES	02/97 ▸ 01/99	6N0820803A			**699515**	SD7B10
1.0 i 6H-X-015 001 ▸	E	999	AER, AHT, ALD ALL, ANV, AUC	ES	04/98 ▸	6N0820803C	**699303**		•**699803**	SD6V12
1.4 i	E	1390	AEX, AKV, APQ	ES	02/97 ▸ 04/98	6N0820803A			**699515**	SD7B10
1.4 i, 1.4 i 16V	E	1390	AFK, AKK/V, ANM/W APQ, AQQ, AUB/D	ES	04/98 ▸	6N0820803C	**699303**		•**699803**	SD6V12
1.4 TDi	D	1422	AMF	ES	10/99 ▸	6N0820803C	**699303**		•**699803**	SD6V12
1.7 SDi	D	1716	AKU	ES	12/98 ▸ 10/03	6N0820803C	**699303**		•**699803**	SD6V12

CORDOBA (93>96)

1.4 i	E	1391	ABD	ES	11/93 ▸ 11/95	1H0820803J			**699698**	V5
1.4 i	E	1391	ABD, AEX	ES	11/93 ▸ 06/96	1H0820803D	**699115** ⊃MQ		**699615**	SD7V16
1.6 i	E	1595	1F	ES	11/93 ▸ 06/96	1H0820803D	**699115** ⊃MQ		**699615**	SD7V16
1.6 i	E	1595	1F	ES	07/94 ▸ 06/96	1H0820803J			**699698**	V5
1.6 i	E	1598	ABU	ES	11/93 ▸ 07/94	1H0820803J			**699698**	V5
1.6 i	E	1598	ABU, AFT	ES	11/93 ▸ 06/96	1H0820803D	**699115** ⊃MQ		**699615**	SD7V16
1.8 i, 1.8 i 16V	E	1781	ABS, ACC, ADL ADZ	ES	11/93 ▸ 06/96	1H0820803D	**699115** ⊃MQ		**699615**	SD7V16
1.8 i, 1.8 i 16V	E	1781	ABS, ADL, ADZ	ES	11/93 ▸ 06/96	1H0820803J			**699698**	V5
2.0 i	E	1984	2E, AGG	ES	11/93 ▸ 06/96	1H0820803D	**699115** ⊃MQ		**699615**	SD7V16
2.0 i	E	1984	2E	ES	11/93 ▸ 06/96	1H0820803J			**699698**	V5
1.9 D, 1.9 SDI, 1.9 TD	D	1896	1Y, AAZ, AEY	ES	11/93 ▸ 06/96	1H0820803D	**699115** ⊃MQ		**699615**	SD7V16
1.9 D, 1.9 TD	D	1896	1Y, AAZ	ES	11/93 ▸ 06/96	1H0820803J			**699698**	V5

CORDOBA (96>99)

1.0 i	E	999	AER	ES	06/97 ▸ 04/99	1H0820803D	**699115** ⊃MQ		**699615**	SD7V16

• **New** Nouveau **Neu** Nuevo **Novo** Nuovo **Nieuw** Nowi **Новый** Novy **Nou** Yeni **Νέους**

⊃MQ : **Valeo Matching Quality** Valeo gleichwertige Qualität **Valeo Calidad Equivalente** Część Valeo o Jakości Porównywalnej z Oryginalem

Use technical code cross-list for precise selection page 648
Utiliser les pages Cross-List (page 648) pour identifier la bonne référence
Verwenden Sie die Code-Vergleichsliste zur gezielten Suche des adäquaten Bauteils, Seite 648
Utilizar la lista de códigos cruzados para una selección precisa, página 648
Utilizzare la crosslist dei codici tecnici per una scelta precisa, pag. 648
Gebruik de lijst met verwijzingen naar de technische 648 voor de juiste keuze, op pagina 648
U yj listy kodów technicznych Valeo na stronie 648 dla precyzyjnego doboru
A se folosi paginile crosslist ca sa identifiati referita corecta
Χρησιμοποιήστε την λίστα αντιστοιχίων κωδικών για να κάνετε σωστή και ακριβή επιλογή, σελίδα 648

		cc				OE NEW	Valeo NEW	OE ES	Valeo ES	
SEAT (.../...)										
CORDOBA (96>99) (.../...)										
1.4 i, 1.4 i 16V	E	1390	AEX, AFH, AKV ANX, APQ	ES	07/96 ▸ 05/99	1H0820803D	**699115** MQ		**699615**	SD7V16
1.6 i	E	1595	1F	ES	07/96 ▸ 05/99	1H0820803D	**699115** MQ		**699615**	SD7V16
1.6 i	E	1598	AEE, AFT, ALM	ES	07/96 ▸ 05/99	1H0820803D	**699115** MQ		**699615**	SD7V16
1.8 i	E	1781	ACC, ADZ	ES	07/96 ▸ 05/99	1H0820803D	**699115** MQ		**699615**	SD7V16
2.0 i, 2.0 i 16V	E	1984	ABF, AGG	ES	07/96 ▸ 04/99	1H0820803D	**699115** MQ		**699615**	SD7V16
1.9 D, 1.9 SDI, 1.9 TD 1.9 TDi	D	1896	1Y, 1Z, AAZ, AEY AFN, AHU	ES	07/96 ▸ 05/99	1H0820803D	**699115** MQ		**699615**	SD7V16
CORDOBA (99>2002)										
1.0 i, 1.0 i 16V	E	999	ALD, ANV, AST AUC, AVZ	ES	08/99 ▸ 08/02	6N0820803C	**699303**		•**699803**	SD6V12
1.4 i, 1.4 i 16V	E	1390	AKK, ANW, APE AQQ, AUB, AUD	ES	05/99 ▸ 08/02	1J0820803K	**813200** MQ		**813700**	SD7V16
1.4 i, 1.4 i 16V ▸6K-X-445 000	E	1390	AKK, ANW, AUD	ES	05/99 ▸ 08/02	1J0820805	•**813400**		**813700**	DCS17
1.4 i, 1.4 i 16V	E	1390	ANW, AKK, AUD	ES	09/99 ▸ 08/02	1J0820803K	•**813400**		**813700**	DCS17
1.6 i	E	1595	AEH, AKL, APF AUR	ES	05/99 ▸ 08/02	1J0820803K	**813200** MQ		**813700**	SD7V16
1.6 i	E	1595	APF, AEH, AKL AUR	ES	05/99 ▸ 08/02	1J0820805	•**813400**		**813700**	DCS17
1.6 i	E	1595	AUR, AKL, APF AEH	ES	09/99 ▸ 08/02	1J0820803K	•**813400**		**813700**	DCS17
1.6 i	E	1598	ALM	ES	05/99 ▸ 08/02	1J0820803K	**813200** MQ		**813700**	SD7V16
1.6 i ▸6K-X-445 000	E	1598	ALM	ES	05/99 ▸ 08/02	1J0820805	•**813400**		**813700**	DCS17
1.6 i 6K-X-445 001 ▸	E	1598	ALM	ES	09/99 ▸ 08/02	1J0820803K	•**813400**		**813700**	DCS17
1.8 i Turbo 20V	E	1781	AQX	ES	12/99 ▸ 08/02	1J0820803K	**813200** MQ		**813700**	SD7V16
1.8 i Turbo 20V	E	1781	AQX	ES	12/99 ▸ 08/02	1J0820805	•**813400**		**813700**	DCS17
1.8 i Turbo 20V	E	1781	AQX	ES	12/99 ▸ 08/02	1J0820803K	•**813400**		**813700**	DCS17
1.9 SDI, 1.9 TDi	D	1896	AGP, AGR, ALH AQM, ASV	ES	05/99 ▸ 08/02	1J0820803K	**813200** MQ		**813700**	SD7V16
1.9 SDi, 1.9 TDi ▸6K-X-445 000	D	1896	ASV, AGR, ALH,AGP AQM	ES	03/99 ▸ 08/02	1J0820805	•**813400**		**813700**	DCS17
1.9 SDi, 1.9 TDi 6K-X-445 001 ▸	D	1896	AGR, ASV, ALH AGP, AQM	ES	09/99 ▸ 08/02	1J0820803K	•**813400**		**813700**	DCS17
CORDOBA (2002>)										
1.2 i 12V	E	1198	AZQ	ES	10/02 ▸ 04/04	6Q0820803K	**699383**		•**699883**	6SEU12C
1.4 i 16V	E	1390	BBY, BBZ, BKY	ES	09/02 ▸	6Q0820803K	**699383**		•**699883**	6SEU12C
1.6 i	E	1598	BAH	ES	04/03 ▸	6Q0820803J	**699383**		•**699883**	6SEU12C
2.0 i	E	1984	AZL, BBX	ES	09/02 ▸	6Q0820803J	**699383**		•**699883**	6SEU12C
1.4 TDi	D	1422	AMF, BMS, BNM BNV	ES	10/02 ▸	6Q0820803J	**699383**		•**699883**	6SEU12C
1.9 SDI, 1.9 TDi	D	1896	ASY, ASZ, ATD AXR, BLT	ES	09/02 ▸	6Q0820803J	**699383**		•**699883**	6SEU12C
IBIZA (93>99)										
1.4 i	E	1390	AEX	ES	07/95 ▸ 06/96	1H0820803J			**699698**	V5
1.4 i, 1.4 i 16V	E	1390	AEX, AFH, AKV ANX, APQ	ES	07/95 ▸ 01/99	1H0820803D	**699115** MQ		**699615**	SD7V16

You must replace the receiver drier with the compressor
Vous devez remplacer la bouteille déshydratante avec le compresseur
Tauschen Sie den Trockner mit dem Kompressor
Es obligatorio cambiar el Filtro Deshidratante con el Compresor
Tem de substituir o filtro desidratante com o compressor
E' necessario cambiare il filtro disidratatore con il compressore
U moet de filterdroger samen met de compressor vervangen
Musisz wymienić filtr osuszacz przy wymianie sprę arki
Рекомендируем замену осушителя вместо с компрессором
Při výměně kompresoru je nutné vyměnit také vysoušeč
Nu untați sa schimbați uscatorul cu compresorul
Kompresörle birlikte nem alıcıyı da değiştirin
Πρέπει να αντικαταστήσετε το φίλτρο υγρού μαζί με το συμπιεστή

		cc				OE NEW	Valeo NEW	OE ES	Valeo ES	

SEAT (.../...)

IBIZA (93>99) (.../...)

1.4 i	E	1391	ABD	ES	09/93 ▸ 06/96	1H0820803J			**699698**	V5
1.4 i	E	1391	ABD	ES	09/93 ▸ 06/96	1H0820803D	**699115** ⊃MQ		**699615**	SD7V16
1.6 i	E	1595	1F	ES	07/94 ▸ 06/96	1H0820803J			**699698**	V5
1.6 i	E	1595	1F	ES	07/94 ▸ 01/99	1H0820803D	**699115** ⊃MQ		**699615**	SD7V16
1.6 i	E	1598	ABU, AFT	ES	02/93 ▸ 06/96	1H0820803J			**699698**	V5
1.6 i	E	1598	ABU, AEE, AFT ALM	ES	09/93 ▸ 01/99	1H0820803D	**699115** ⊃MQ		**699615**	SD7V16
1.8 i	E	1781	ABS, ACC, ADL ADZ	ES	02/93 ▸ 06/96	1H0820803J			**699698**	V5
1.8 i	E	1781	ABS, ACC, ADL ADZ	ES	02/93 ▸ 01/99	1H0820803D	**699115** ⊃MQ		**699615**	SD7V16
2.0 i	E	1984	2E	ES	02/93 ▸ 06/96	1H0820803J			**699698**	V5
2.0 i, 2.0 i 16V	E	1984	2E, ABF, AGG	ES	02/93 ▸ 01/99	1H0820803D	**699115** ⊃MQ		**699615**	SD7V16
1.9 D, 1.9 SDI, 1.9 TD	D	1896	1Y, AAZ, AEY	ES	02/93 ▸ 06/96	1H0820803J			**699698**	V5
1.9 D, 1.9 SDI, 1.9 TD 1.9 TDi	D	1896	1Y, 1Z, AAZ, AEY AFN, AHU	ES	02/93 ▸ 01/99	1H0820803D	**699115** ⊃MQ		**699615**	SD7V16

IBIZA (99>2001)

1.0 i, 1.0 i 16V	E	999	ALD, ANV, AST AUC, AVZ	ES	08/99 ▸ 11/01	6N0820803C	**699303**		•**699803**	SD6V12
1.4 i, 1.4 i 16V	E	1390	AKK, ANW, APE AQQ, AUA/B/D	ES	08/99 ▸ 11/01	1J0820803K	**813200** ⊃MQ		**813700**	SD7V16
1.4 i, 1.4 i 16V ▸ 6K-Y-006 268	E	1390	AKK, ANW	ES	08/99 ▸ 09/99	1J0820805	•**813400**		**813700**	DCS17
1.4 i, 1.4 i 16V 6K-Y-006 269 ▸	E	1390	AKK, AUD ,ANW	ES	09/99 ▸ 11/01	1J0820803K	•**813400**		**813700**	DCS17
1.6 i	E	1595	AEH, AKL, APF AUR	ES	08/99 ▸ 11/01	1J0820803K	**813200** ⊃MQ		**813700**	SD7V16
1.6 i ▸ 6K-Y-006 268	E	1595	AKL	ES	06/99 ▸ 09/99	1J0820805	•**813400**		**813700**	DCS17
1.6 i 6K-Y-006 269 ▸	E	1595	AEH, APF, AKL AUR	ES	09/99 ▸ 11/01	1J0820803K	•**813400**		**813700**	DCS17
1.6 i	E	1598	ALM	ES	08/99 ▸ 11/01	1J0820803K	**813200** ⊃MQ		**813700**	SD7V16
1.6 i ▸ 6K-Y-006 268	E	1598	ALM	ES	08/99 ▸ 09/99	1J0820805	•**813400**		**813700**	DCS17
1.6 i 6K-Y-006 269 ▸	E	1598	ALM	ES	09/99 ▸ 11/01	1J0820803K	•**813400**		**813700**	DCS17
1.8 i Turbo 20V	E	1781	AQX, AYP	ES	12/99 ▸ 11/01	1J0820803K	**813200** ⊃MQ		**813700**	SD7V16
1.8 i Turbo 20V 6K-Y-006 269 ▸	E	1781	AQX, AYP	ES	12/99 ▸ 11/01	1J0820803K	•**813400**		**813700**	DCS17
1.9 SDI, 1.9 TDi	D	1896	AGP, AGR, ALH AQM, ASV	ES	03/99 ▸ 11/01	1J0820803K	**813200** ⊃MQ		**813700**	SD7V16
1.9 SDi, 1.9 TDi ▸ 6K-Y-006 268	D	1896	AGP, ASV, AGR AQM	ES	03/99 ▸ 09/99	1J0820805	•**813400**		**813700**	DCS17
1.9 SDi, 1.9 TDi 6K-Y-006 269 ▸	D	1896	AGP, AQM, ASV AGR, ALH	ES	09/99 ▸ 11/01	1J0820803K	•**813400**		**813700**	DCS17

IBIZA (2001>)

1.2 i 12V	E	1198	AZQ, BME	ES	11/01 ▸	6Q0820803G	**699383**		•**699883**	6SEU12C
1.4 i 16V	E	1390	AUB, BBY, BBZ	ES	09/01 ▸	6Q0820803J	**699383**		•**699883**	6SEU12C
1.4 i 16V	E	1390	BKY	ES	05/04 ▸	6Q0820803K	**699383**		•**699883**	6SEU12C
1.6 i	E	1598	BAH	ES	04/03 ▸	6Q0820803J	**699383**		•**699883**	6SEU12C

• **New** Nouveau **Neu** Nuevo **Novo** Nuovo **Nieuw** Nowi **Новый** Novy **Nou** Yeni **Νέους**

⊃MQ : **Valeo Matching Quality** Valeo gleichwertige Qualität **Valeo Calidad Equivalente**
Część Valeo o Jakości Porównywalnej z Oryginałem

Use technical code cross-list for precise selection page 648
Utiliser les pages Cross-List (page 648) pour identifier la bonne référence
Verwenden Sie die Code-Vergleichsliste zur gezielten Suche des adäquaten Bauteils, Seite 648
Utilizar la lista de códigos cruzados para una selección precisa, página 648
Utilizzare la crosslist dei codici tecnici per una scelta precisa, pag. 648
Gebruik de lijst met verwijzingen naar de technische 648 voor de juiste keuze, op pagina 648
U yj listy kodów technicznych Valeo na stronie 648 dla precyzyjnego doboru
A se folosi paginile crosslist ca sa identifiati referita corecta
Χρησιμοποιήστε την λίστα αντιστοιχίων κωδικών για να κάνετε σωστή και ακριβή επιλογή, σελίδα 648

		CC				OE NEW	Valeo NEW	OE ES	Valeo ES	
SEAT (.../...)										
IBIZA (2001>) (.../...)										
1.8 i 16V, 1.8 i Turbo 20V	E	1781	BBU, BJX	ES	12/03 ▸	6Q0820803J	**699383**		•**699883**	6SEU12C
2.0 i	E	1984	AZL, BBX	ES	07/02 ▸	6Q0820803J	**699383**		•**699883**	6SEU12C
1.4 TDi	D	1422	AMF, BMS, BNM BNV	ES	05/02 ▸	6Q0820803J	**699383**		•**699883**	6SEU12C
1.9 SDI, 1.9 TDi	D	1896	ASY, ASZ, ATD BLT, BPX	ES	09/01 ▸	6Q0820803J	**699383**		•**699883**	6SEU12C
IBIZA (2008>)										
1.2 i 12V	E	1198	BZG	ES	03/08 ▸ 05/10	6Q0820808G	**699383**		•**699883**	6SEU12C
1.4 i 16V	E	1390	BXW	ES	03/08 ▸	6Q0820808D	**699383**		•**699883**	6SEU12C
1.6 i 16V	E	1598	BTS	ES	05/08 ▸	6Q0820808D	**699383**		•**699883**	6SEU12C
1.4 TDI	D	1422	BMS/F	ES	07/08 ▸ 06/10	6Q0820808E	**699383**		•**699883**	6SEU12C
1.9 TDI	D	1896	BLS/F,BXJ/F	ES	03/08 ▸	6Q0820808F	**699383**		•**699883**	6SEU12C
LEON										
1.4 i 16V	E	1390	AHW, APE, AXP BCA	ES	11/99 ▸	1J0820803K	**813200** ⊃MQ		**813700**	SD7V16
1.6 i, 1.6 i 16V	E	1595	AEH, AKL, AUS AZD, BCB	ES	08/99 ▸	1J0820803K	**813200** ⊃MQ		**813700**	SD7V16
1.6 i, 1.6 i 16V	E	1595	AEH, AKL	ES	08/99 ▸	1J0820803K	•**813400**		**813700**	DCS17
1.8 i 20V, 1.8 i Turbo 20V	E	1781	AGN, AJQ, AMK APG, APP, ARY AUQ, BAM	ES	08/99 ▸	1J0820803K	**813200** ⊃MQ		**813700**	SD7V16
1.8 i 20V, 1.8 i Turbo 20V	E	1781	APP, APG, AGN ARY, AMK, AUQ AJQ, BAM	ES	08/99 ▸	1J0820803K	•**813400**		**813700**	DCS17
2.8 i V6 24V	E	2792	AUE, BDE	ES	10/00 ▸	1J0820803K	**813200** ⊃MQ		**813700**	SD7V16
1.9 SDI, 1.9 TDi	D	1896	AGR, AHF, ALH AQM, ARL, ASV	ES	10/99 ▸	1J0820803K	**813200** ⊃MQ		**813700**	SD7V16
1.9 SDi, 1.9 TDi	D	1896	AQM, ALH, ARL AHF, ASV, AGR	ES	10/99 ▸	1J0820803K	•**813400**		**813700**	DCS17
LEON II (2005>)										
1.4 i 86 16V ▸ 1P-7-049 500	E	1390	BXW	ES	06/06 ▸ 11/06	1K0820803N	**699357**	1K0820859C	**699857**	DCS17E
1.6 i	E	1595	BGU, BSE, BSF	ES	07/05 ▸	1K0820803N	**699357**	1K0820803N	**699857**	DCS17E
2.0 FSI 16V, 2.0 TFSI 16V	E	1984	BLR, BLY, BVY BVZ, BWA	ES	07/05 ▸	1K0820803N	**699357**	1K0820803N	**699857**	DCS17E
2.0 TFSi 16V	E	1984	BWJ	ES	11/06 ▸ 05/09	8J0260805		8J0260805	•**813838**	6SEU14C
1.9 TDi	D	1896	BKC, BLS	ES	07/05 ▸	1K0820803Q	**699357**	1K0820803S	**699857**	DCS17E
2.0 TDi 16V	D	1968	AZV, BKD, BMM	ES	07/05 ▸	1K0820803Q	**699357**	1K0820803S	**699857**	DCS17E
TOLEDO (91>98)										
1.6 i	E	1595	1F	ES	02/91 ▸ 10/98	1H0820803D	**699115** ⊃MQ		**699615**	SD7V16
1.6 i	E	1598	AFT	ES	09/96 ▸ 10/98	1H0820803D	**699115** ⊃MQ		**699615**	SD7V16
1.8 i	E	1781	ABS, ADZ, RP	ES	02/91 ▸ 10/98	1H0820803D	**699115** ⊃MQ		**699615**	SD7V16
2.0 i, 2.0 i 16V	E	1984	2E, ABF, AGG	ES	02/91 ▸ 10/98	1H0820803D	**699115** ⊃MQ		**699615**	SD7V16
1.9 D, 1.9 TD, 1.9 TDi	D	1896	1Y, 1Z, AAZ, AFN AHU	ES	02/91 ▸ 10/98	1H0820803D	**699115** ⊃MQ		**699615**	SD7V16
TOLEDO (98>2004)										
1.4 i 16V ▸ 6K-Y-006 268	E	1390	AHW, AXP	ES	01/00 ▸ 05/02	1J0820805	**813200** ⊃MQ		**813700**	SD7V16

You must replace the receiver drier with the compressor
Vous devez remplacer la bouteille déshydratante avec le compresseur
Tauschen Sie den Trockner mit dem Kompressor
Es obligatorio cambiar el Filtro Deshidratante con el Compresor
Tem de substituir o filtro desidratante com o compressor
E' necessario cambiare il filtro disidratatore con il compressore
U moet de filterdroger samen met de compressor vervangen

Musisz wymienić filtr osuszacz przy wymianie sprę arki
Рекомендируем замену осушителя вместо с компрессором
Při výměně kompresoru je nutné vyměnit také vysoušeč
Nu untați sa schimbați uscatorul cu compresorul
Kompresörle birlikte nem alıcıyı da değiştirin
Πρέπει να αντικαταστήσετε το φίλτρο υγρού μαζί με το συμπιεστή

		cc				OE NEW	Valeo NEW	OE ES	Valeo ES	
SEAT (.../...)										
TOLEDO (98>2004) (.../...)										
1.6 i 16V	E	1595	BCB	ES	10/98 ▸ 07/04	1J0820803K	**813200** ⊃MQ		**813700**	SD7V16
1.6 i, 1.6 i 16V ▸ 6K-Y-006 268	E	1595	AEH, AKL	ES	10/98 ▸ 07/04	1J0820805	•**813400**		**813700**	DCS17
1.8 i 20V	E	1781	AGN, APG, AUQ	ES	10/98 ▸ 07/04	1J0820803K	**813200** ⊃MQ		**813700**	SD7V16
1.8 i 20V ▸ 6K-Y-006 268	E	1781	AGN, APG	ES	10/98 ▸ 07/04	1J0820805	•**813400**		**813700**	DCS17
1.8 i 20V	E	1781	AUQ, AGN, APG	ES	05/01 ▸ 07/04	1J0820803K	•**813400**		**813700**	DCS17
2.3 i VR5 20V	E	2324	AGZ, AQN	ES	10/98 ▸ 11/03	1J0820803K	**813200** ⊃MQ		**813700**	SD7V16
1.9 TDi ▸ 6K-Y-006 268	D	1896	AGR, AHF, ALH ARL, ASV, ASZ	ES	10/98 ▸ 07/04	1J0820805	**813200** ⊃MQ		**813700**	SD7V16
1.9 TDi ▸ 6K-Y-006 268	D	1896	ASZ, AHF, ASV AGR, ALH, ARL	ES	10/98 ▸ 07/04	1J0820805	•**813400**		**813700**	DCS17
TOLEDO (2004>)										
1.4 SRE 5P-7-063 001 ▸ 5P-8-023 328	E	1390	BXW	ES	05/06 ▸ 06/07	1K0820859T		8J0260805	•**813838**	6SEU14C
1.4 FSi,1.4 SRE 5P-7-063 001 ▸ 5-P-8 023 32	E	1390	BXW,CAXC	ES	05/06 ▸	1K0820803N	**699357**	1K0820859E	**699857**	DCS17E
1.6 i	E	1595	BGU	ES	09/04 ▸	1K0820803N	**699357**	1K0820859M	**699857**	DCS17E
1.6 i 5P-7-063 001 ▸ 5-P-8-023 32	E	1595	BSE,BSF	ES	05/05 ▸ 09/07	1K0820859J		8J0260805	•**813838**	6SEU14C
1.8 FSi 16V 5P-8-023 328 ▸ 5P-8-023 329	E	1798	BZB	ES	06/07 ▸	1K0820808A		8J0260805	•**813838**	6SEU14C
1.8 FSi 16V 5P-8-023 328 ▸	E	1798	BYT,BZB	ES	03/07 ▸	1K0820803N	**699357**	1K0820859M	**699857**	DCS17E
2.0 FSI 16V	E	1984	BLR, BLY	ES	09/04 ▸	1K0820803N	**699357**	1K0820803N	**699857**	DCS17E
1.9 TDi	D	1896	BJB, BKC	ES	09/04 ▸	1K0820803Q	**699357**	1K0820803S	**699857**	DCS17E
1.9 TDi	D	1896	BXE	ES	02/06 ▸	5N0820803		8J0260805	•**813838**	6SEU14C
2.0 TDi 16V	D	1968	AZV, BKD	ES	09/04 ▸	1K0820803Q	**699357**	1K0820859F	**699857**	DCS17E
SEAT										
INCA										
1.4 i	E	1390	AEX, AKV, APQ	ES	11/95 ▸ 06/03	1H0820803D	**699115** ⊃MQ		**699615**	SD7V16
1.4 i, 1.4 i 16V	E	1390	AUA, AUD	ES	09/00 ▸ 06/03	1J0820803K	**813200** ⊃MQ		**813700**	SD7V16
1.4 i, 1.4 i 16V	E	1390	AUD	ES	09/00 ▸ 06/03	1J0820803K	•**813400**		**813700**	DCS17
1.6 i	E	1595	1F	ES	11/95 ▸ 05/97	1H0820803D	**699115** ⊃MQ		**699615**	SD7V16
1.6 i	E	1598	AEE	ES	06/97 ▸ 09/00	1H0820803D	**699115** ⊃MQ		**699615**	SD7V16
1.7 SDI	D	1714	AHB	ES	09/96 ▸ 09/00	1H0820803D	**699115** ⊃MQ		**699615**	SD7V16
1.9 SDI	D	1896	AYQ	ES	09/00 ▸ 06/03	1J0820803K	**813200** ⊃MQ		**813700**	SD7V16
1.9 D, 1.9 SDI	D	1896	1Y, AEY	ES	11/95 ▸ 06/03	1H0820803D	**699115** ⊃MQ		**699615**	SD7V16
SKODA										
FABIA										
1.0 i	E	997	AQV, ARV	ES	10/00 ▸ 08/02	6Q0820803J	**699383**		•**699883**	6SEU12C
1.2 i, 1.2 i 6V	E	1198	AWY, AZQ, BMD BME-E4	ES	09/00 ▸	6Q0820803K	**699383**		•**699883**	6SEU12C

• **New** Nouveau **Neu** Nuevo **Novo** Nuovo **Nieuw** Nowi **Новый** Novy **Nou** Yeni **Νέους**

⊃MQ : **Valeo Matching Quality** Valeo gleichwertige Qualität **Valeo Calidad Equivalente** Część Valeo o Jakości Porównywalnej z Oryginałem

Use technical code cross-list for precise selection page 648
Utiliser les pages Cross-List (page 648) pour identifier la bonne référence
Verwenden Sie die Code-Vergleichsliste zur gezielten Suche des adäquaten Bauteils, Seite 648
Utilizar la lista de códigos cruzados para una selección precisa, página 648
Utilizzare la crosslist dei codici tecnici per una scelta precisa, pag. 648
Gebruik de lijst met verwijzingen naar de technische 648 voor de juiste keuze, op pagina 648
U yj listy kodów technicznych Valeo na stronie 648 dla precyzyjnego doboru
A se folosi paginile crosslist ca sa identifiati referita corecta
Χρησιμοποιήστε την λίστα αντιστοιχίων κωδικών για να κάνετε σωστή και ακριβή επιλογή, σελίδα 648

		CC				OE NEW	Valeo NEW	OE ES	Valeo ES	
SKODA (.../...)										
FABIA (.../...)										
1.4 i 16V	E	1390	AUA, AUB, BBY BBZ, BKY	ES	10/99 ▸	6Q0820803J	**699383**		•**699883**	6SEU12C
1.4 i	E	1397	AME, AQW, ATZ AZE, AZF	ES	08/99 ▸ 05/03	6Q0820803J	**699383**		•**699883**	6SEU12C
2.0 i ▸6Y-4-115 989	E	1984	AZL	ES	07/00 ▸ 07/04	6Q0820803J	**699383**		•**699883**	6SEU12C
1.4 TDi	D	1422	AMF	ES	03/03 ▸	6Q0820803K	**699383**		•**699883**	6SEU12C
1.9 SDI ▸6Y-4-115 989	D	1896	ASY	ES	10/99 ▸ 07/04	6Q0820803J	**699383**		•**699883**	6SEU12C
1.9 SDI, 1.9 TDi 6Y-4-115 000 ▸	D	1896	ASY, ASZ, ATD	ES	08/04 ▸	6Q0820803J	**699383**		•**699883**	6SEU12C
FELICIA (94>2001)										
1.3 i	E	1289	AMH	ES	08/96 ▸ 12/97	6N0820803A			**699515**	SD7B10
1.6 i	E	1598	16MPI, AEE	ES	05/95 ▸ 08/01	6N0820803A			**699515**	SD7B10
OCTAVIA (96>2000)										
1.4 i	E	1390	AMD	ES	02/99 ▸ 07/00	1J0820805	**813200** ⊃MQ		**813700**	SD7V16
1.6 i	E	1595	AEH, AKL	ES	02/97 ▸ 07/00	1J0820805	**813200** ⊃MQ		**813700**	SD7V16
1.6 i	E	1595	AEH, AKL	ES	02/97 ▸ 07/00	1J0820805	•**813400**		**813700**	DCS17
1.6 i	E	1598	AEE	ES	10/96 ▸ 07/00	1J0820805	**813200** ⊃MQ		**813700**	SD7V16
1.8 i 20V, 1.8 i Turbo 20V	E	1781	AGN, AGU, ARZ	ES	10/96 ▸ 07/00	1J0820805	**813200** ⊃MQ		**813700**	SD7V16
1.8 i 20V, 1.8 i Turbo 20V	E	1781	AGU, AGN, ARZ	ES	10/96 ▸ 07/00	1J0820805	•**813400**		**813700**	DCS17
2.0 i	E	1984	APK, AQY, ATF AZH	ES	05/99 ▸ 07/00	1J0820805	**813200** ⊃MQ		**813700**	SD7V16
2.0 i	E	1984	AQY, AZH, APK ATF	ES	05/99 ▸ 07/00	1J0820805	•**813400**		**813700**	DCS17
1.9 SDI, 1.9 TDi	D	1896	AGP, AGR, AHF ASV	ES	10/96 ▸ 07/00	1J0820805	**813200** ⊃MQ		**813700**	SD7V16
1.9 SDi, 1.9 TDi	D	1896	AGR, AHF, ASV AGP	ES	10/96 ▸ 07/00	1J0820805	•**813400**		**813700**	DCS17
OCTAVIA (2000>2004)										
1.4 i, 1.4 i 16V	E	1390	AMD, AXP, BCA	ES	08/00 ▸	1J0820803K	**813200** ⊃MQ		**813700**	SD7V16
1.6 i	E	1595	AEE, AEH, AKL AVU, BFQ	ES	08/00 ▸	1J0820805	**813200** ⊃MQ		**813700**	SD7V16
1.6 i ▸1-UX-232429	E	1595	AKL, AEH	ES	08/00 ▸	1J0820805	•**813400**		**813700**	DCS17
1.6 i	E	1595	AKL, AEH, AVU BFQ	ES	08/00 ▸	1J0820803K	•**813400**		**813700**	DCS17
1.6 i	E	1598	AEE	ES	08/00 ▸ 09/04	1J0820803K	**813200** ⊃MQ		**813700**	SD7V16
1.8, 1.8 i Turbo 20V	E	1781	AGU, ARX, ARZ AUM, AUQ	ES	08/00 ▸ 09/04	1J0820803K	**813200** ⊃MQ		**813700**	SD7V16
1.8, 1.8 i Turbo 20V	E	1781	ARX, ARZ, AGU AUQ, AUM	ES	08/00 ▸ 09/04	1J0820803K	•**813400**		**813700**	DCS17
1.8 i Turbo 20V ▸1-UX-232429	E	1781	AGU, ARZ	ES	08/00 ▸ 09/04	1J0820805	•**813400**		**813700**	DCS17
2.0 i	E	1984	AEG, APK, AQY AZH	ES	08/00 ▸ 09/04	1J0820805	**813200** ⊃MQ		**813700**	SD7V16
2.0 i	E	1984	AEG, AQY, AZH APK	ES	08/00 ▸ 09/04	1J0820803K	•**813400**		**813700**	DCS17

You must replace the receiver drier with the compressor
Vous devez remplacer la bouteille déshydratante avec le compresseur
Tauschen Sie den Trockner mit dem Kompressor
Es obligatorio cambiar el Filtro Deshidratante con el Compresor
Tem de substituir o filtro desidratante com o compressor
E' necessario cambiare il filtro disidratatore con il compressore
U moet de filterdroger samen met de compressor vervangen
Musisz wymienić filtr osuszacz przy wymianie sprę arki
Рекомендируем замену осушителя вместо с компрессором
Při výměně kompresoru je nutné vyměnit také vysoušeč
Nu untați sa schimbați uscatorul cu compresorul
Kompresörle birlikte nem alıcıyı da değiştirin
Πρέπει να αντικαταστήσετε το φίλτρο υγρού μαζί με το συμπιεστή

		CC				OE NEW	Valeo NEW	OE ES	Valeo ES	
SKODA (.../...)										
OCTAVIA (2000>2004) (.../...)										
2.0 i ▸1-UX-232429	E	1984	AQY, APK, AZH	ES	08/00 ▸ 09/04	1J0820805	•**813400**		**813700**	DCS17
1.9 D, 1.9 TDi	D	1896	AGR, AHF, ALH ASV/Z, ATD	ES	08/00 ▸	1J0820803K	**813200** ⊃MQ		**813700**	SD7V16
1.9 D, 1.9 TDi	D	1896	ASV, ASZ, AGR ALH, AHF, ATD AQM	ES	08/00 ▸	1J0820803K	•**813400**		**813700**	DCS17
1.9 TDi ▸1-UX-232429	D	1896	ASV, AGR, AHF	ES	08/00 ▸	1J0820805	•**813400**		**813700**	DCS17
OCTAVIA (2004>)										
1.4 i 16V	E	1390	BCA	ES	05/04 ▸	1K0820803G	**699357**	1K0820803Q	**699857**	DCS17E
1.6 i	E	1595	BGU, BSE, BSF	ES	05/04 ▸	1K0820803N	**699357**	1K0820803Q	**699857**	DCS17E
1.6 i	E	1595	BSE,BSF	ES	05/05 ▸ 10/08	8J0260805		8J0260805	•**813838**	6SEU14C
1.6 FSI 16V	E	1598	BLF	ES	05/04 ▸	1K0820803P	**699357**	1K0820803Q	**699857**	DCS17E
1.8 TFSi 16V	E	1798	BZB	ES	06/07 ▸	1K0820803P	**699357**	1K0820859D	**699857**	DCS17E
2.0 FSI 16V, 2.0 TFSI	E	1984	BLR,BLX,BLY,BVX BVY,BVZ,BWA	ES	11/05 ▸	1K0820803N	**699357**	1K0820859D	**699857**	DCS17E
1.9 TDi	D	1896	BJB,BKC,BLS,BXE	ES	05/04 ▸	1K0820803Q	**699357**	1K0820803S	**699857**	DCS17E
2.0 TDi 16V	D	1968	AZV,BKD,BMM/F,BMN	ES	05/04 ▸	1K0820803Q	**699357**	1K0820803S	**699857**	DCS17E
ROOMSTER (2006>)										
1.2 i 12V	E	1198	BME,BZG	ES	05/06 ▸	6Q0820803Q	**699383**		•**699883**	6SEU12C
1.4 i 16V ▸5J-85011 702	E	1390	BXW	ES	05/06 ▸	6Q0820808D	**699383**		•**699883**	6SEU12C
1.6 i 16V	E	1598	BTS	ES	05/06 ▸	6Q0820808B	**699383**		•**699883**	6SEU12C
1.4 TDi	D	1422	BMS/F,BNM,BNV	ES	05/06 ▸	6Q0820808D	**699383**		•**699883**	6SEU12C
1.9 TDi	D	1896	AXR,BLS,BSW	ES	03/06 ▸	6Q0820803P	**699383**		•**699883**	6SEU12C
SUPERB (2001>2008)										
1.8 i Turbo 20V	E	1781	AWT	ES	12/01 ▸ 03/08	8D0260805J	**699376** ⊃MQ		•**699876**	7SBU16C
2.0 i	E	1984	AZM	ES	12/01 ▸ 03/08	8D0260805J	**699376** ⊃MQ		•**699876**	7SBU16C
2.8 i V6 30V	E	2771	AMX, BBG		12/01 ▸ 03/08	4B0260805B	**813166**			7SBU16C
1.9 TDi	D	1896	AVB/F, AWX	ES	12/01 ▸ 03/08	8D0260805J	**699376** ⊃MQ		•**699876**	7SBU16C
2.0 TDi 16V	D	1968	BSS,BWW	ES	10/05 ▸ 03/08	8D0260805J	**699376**		•**699876**	7SBU16C
2.5 TDi V6 24V	D	2496	AYM, BDG	ES	12/01 ▸ 03/08	4B0260805C	**699275** ⊃MQ		**699775**	7SBU16C
SUPERB II (2008>)										
1.4 TFSi 16V	E	1390	CAXC	ES	04/08 ▸	1K0820803P	**699357**	1K0820859M	**699857**	DCS17E
1.8 TFSi 16V	E	1798	BZB,CDAA	ES	04/08 ▸	1K0820803P	**699357**	1K0820859M	**699857**	DCS17E
1.9 TDi	D	1896	BLS,BXE	ES	04/08 ▸	1K0820803P	**699357**	1K0820859F	**699857**	DCS17E
2.0 TDi,2.0 TDi 16V	D	1968	BMP,CBBB/F	ES	04/08 ▸ 05/10	1K0820803P	**699357**	1K0820859F	**699857**	DCS17E
SUZUKI										
GRAND VITARA (YT4)										
2,0 i	E	1984	J20		10/05 ▸	9520064JB01	**813268**			DCS14
1,9 DDiS	D	1870		ES	10/05 ▸	9520167JA0	**813269**		•**813769**	DCS17
TOYOTA										
AVENSIS (97>2000)										
1.6 i 16V	E	1587	4A-FEC	ES	10/97 ▸ 06/00	883202B400		883202B400	•**813842**	10PA15C

• **New** Nouveau **Neu** Nuevo **Novo** Nuovo **Nieuw** Nowi **Новый** Novy **Nou** Yeni **Νέους**

⊃MQ : **Valeo Matching Quality** Valeo gleichwertige Qualität **Valeo Calidad Equivalente** Część Valeo o Jakości Porównywalnej z Oryginałem

Use technical code cross-list for precise selection page 648
Utiliser les pages Cross-List (page 648) pour identifier la bonne référence
Verwenden Sie die Code-Vergleichsliste zur gezielten Suche des adäquaten Bauteils, Seite 648
Utilizar la lista de códigos cruzados para una selección precisa, página 648
Utilizzare la crosslist dei codici tecnici per una scelta precisa, pag. 648
Gebruik de lijst met verwijzingen naar de technische 648 voor de juiste keuze, op pagina 648
U yj listy kodów technicznych Valeo na stronie 648 dla precyzyjnego doboru
A se folosi paginile crosslist ca sa identifiati referita corecta
Χρησιμοποιήστε την λίστα αντιστοιχίων κωδικών για να κάνετε σωστή και ακριβή επιλογή, σελίδα 648

		cc				OE NEW	Valeo NEW	OE ES	Valeo ES	
TOYOTA (.../...)										
AVENSIS (97>2000) (.../...)										
1.8 i 16V	E	1762	7A-FE	ES	10/97 ▸ 06/00	883202B400		883202B400	•**813842**	10PA15C
AYGO										
1.0 VVTi	E	998	1KR-FE	ES	06/05 ▸	883100H010	**699393**		**699893**	DKV06R
1.4 D	D	1398	2WZTV		06/05 ▸	883100H020	**699392**			DKV06R
COROLLA (90) (87>92)										
1.6,1.6 16V	E	1587	4A-F,4A-FE,4A-GE	ES	05/87 ▸ 08/89	8832012520		883202B400	•**813842**	10PA15C
VAUXHALL										
AGILA										
1.0 i 12V	E	973	Z10XE	ES	03/00 ▸ 08/03	9167048			**699748**	V5
1.0 i Twinport 12V	E	998	Z10XEP	ES	08/03 ▸	13197255			**699771**	CVC
1.0 i Twinport 12V	E	998	Z10XEP	ES	08/03 ▸	9167048			**699748**	V5
1.2 i 16V	E	1199	Z12XE	ES	03/00 ▸ 08/04	9167048			**699748**	V5
1.2 i Twinport 16V	E	1229	Z12XEP	ES	09/04 ▸	R1580052			**699771**	CVC
1.3 CDTi	D	1248	Z13DT	ES	08/03 ▸			93178275	**699867**	SD6V10
ASTRA III (91>98)										
1.4 i, 1.4 i 16V	E	1389	C14SE, X14XE	ES	09/91 ▸ 03/98	1135312	**699071**	1854124	**699571**	V5
1.6 i, 1.6 i 16V	E	1598	C16NZ, C16SE X16SZ, X16XEL	ES	09/91 ▸ 03/98	1135312	**699071**	1854124	**699571**	V5
1.8 i	E	1796	C18NZ	ES	10/91 ▸ 07/94	1135312	**699071**	1854124	**699571**	V5
1.8 i 16V	E	1799	C18XE, C18XEL	ES	06/93 ▸ 03/98	1135312	**699071**	1854124	**699571**	V5
2.0 i, 2.0 i 16V	E	1998	C20NE, C20XE X20XEV	ES	09/91 ▸ 03/98	1135312	**699071**	1854124	**699571**	V5
ASTRA IV (98>)										
1.2 i 16V	E	1199	X12XE	ES	02/98 ▸ 08/00			93176853	**699749**	CVC
1.4 i 16V	E	1389	X14XE	ES	04/98 ▸	9174396	**699250** ⊃MQ		**699750**	CVC
1.6 i, 1.6 i 16V	E	1598	Z16SE/E4, Z16XE	ES	02/98 ▸	9165714	**699270** ⊃MQ	R1580022	**699770**	CVC
1.6 i, 1.6 i 16V	E	1598	X16SZR, X16XEL	ES	04/98 ▸	90559855	**699250** ⊃MQ		**699750**	CVC
1.6 i 2Z271937 ▸	E	1598	Z16SE/E4	ES	01/02 ▸ 02/04	24462196	**699307**	93176127	**699807**	PXV16
1.8 i 16V	E	1796	Z18XE	ES	04/01 ▸	9174396	**699250** ⊃MQ		**699750**	CVC
1.8 i 16V	E	1799	X18XE, X18XE1	ES	04/98 ▸	9174396	**699250** ⊃MQ		**699750**	CVC
1.8 i 16V	E	1796	Z18XE, Z18XEL	ES	02/00 ▸	9165714	**699270** ⊃MQ	R1580022	**699770**	CVC
2.0 i 16V, 2.0 i Turbo 16V	E	1998	X20XEV	ES	04/98 ▸	9174396	**699250** ⊃MQ		**699750**	CVC
2.2 i 16V	E	2198	Z22SE	ES	07/00 ▸	9132925	**699307**		**699807**	PXV16
1.7 D Turbo	D	1686	X17DTL	ES	04/98 ▸	9174397	**699251** ⊃MQ		**699751**	CVC
2.0 i Turbo 16V	E	1998	Z20LER, Z20LET	ES	02/00 ▸	9165714	**699270** ⊃MQ	R1580022	**699770**	CVC
2.0 Di 16V	D	1995	Y20DTL	ES	04/98 ▸	9132922	**699306** ⊃MQ		**699806**	SD6V12
2.2 DTI 16V	D	2171	Y22DTR	ES	10/02 ▸	9132922	**699306** ⊃MQ		**699806**	SD6V12

You must replace the receiver drier with the compressor
Vous devez remplacer la bouteille déshydratante avec le compresseur
Tauschen Sie den Trockner mit dem Kompressor
Es obligatorio cambiar el Filtro Deshidratante con el Compresor
Tem de substituir o filtro desidratante com o compressor
E' necessario cambiare il filtro disidratatore con il compressore
U moet de filterdroger samen met de compressor vervangen
Musisz wymienić filtr osuszacz przy wymianie sprę arki
Рекомендируем замену осушителя вместо с компрессором
Při výměně kompresoru je nutné vyměnit také vysoušeč
Nu untați sa schimbați uscatorul cu compresorul
Kompresörle birlikte nem alıcıyı da değiştirin
Πρέπει να αντικαταστήσετε το φίλτρο υγρού μαζί με το συμπιεστή

		cc				OE NEW	Valeo NEW	OE ES	Valeo ES	
VAUXHALL (.../...)										
ASTRA V (2004>)										
1.4 i Twinport 16V	E	1364	Z14XEP	ES	03/04 ▸	13124749			**813600**	CVC
1.6 i 16V, 1.6 i Twinport	E	1598	Z16XEP	ES	03/04 ▸	13124750			**699862**	CVC
1.8 i 16V	E	1796	Z18XE	ES	03/04 ▸	13124749			**813600**	CVC
2.0 T, 2.0 i Turbo 16V	E	1998	Z20LEH, Z20LEL Z20LER	ES	03/04 ▸	13139055			**813605**	CVC
1.3 CDTI 16V	D	1248	Z13DTH	ES	08/05 ▸	13124754			**813604**	CVC
1.7 CDTI, 1.7 DTi 16V	D	1686	Z17DTH, Z17DTL	ES	03/04 ▸	13124751	•**813101**		**813601**	CVC
1.9 CDTI, 1.9 CDTI 16V	D	1910	Z19DTH, Z19DTL	ES	07/04 ▸	13124752			**813602**	CVC
CALIBRA										
2.0 i, 2.0 i 16V L1000001 ▸ N1299999	E	1998	C20NE, C20XE X20XEV	ES	06/90 ▸ 01/92	1135008	**699070**	1854129	**699570**	V5
2.0 i, 2.0 i 16V 2.0 i Turbo R1000001 ▸	E	1998	C20LET, C20NE X20XEV	ES	01/94 ▸ 07/97	1135312	**699071**	1854124	**699571**	V5
2.5 i V6 R9000001 ▸	E	2498	C25XE, X25XE-170	ES	01/94 ▸ 07/97	1135312	**699071**	1854124	**699571**	V5
CARLTON										
2.6 i	E	2594	C26NE	ES	09/90 ▸ 05/94	1135046			**699574**	V5
3.0 i, 3.0 i 24V	E	2968	30NE, C30SE	ES	03/87 ▸ 08/93	1135049			**699574**	V5
3.6 Lotus	E	3615	C36GET	ES	09/90 ▸ 05/94	1135046			**699574**	V5
CAVALIER III (88>95)										
1.4	E	1389	14NV	ES	11/88 ▸ 08/92	1135008	**699070**	1854129	**699570**	V5
1.6, 1.6 i	E	1598	16SV, C16NZ	ES	10/88 ▸ 06/93	1135008	**699070**	1854129	**699570**	V5
1.6 i	E	1598	C16NZ	ES	07/94 ▸ 10/95	1135312	**699071**	1854124	**699571**	V5
1.8, 1.8 i	E	1796	18SV, C18NZ	ES	10/89 ▸ 06/93	1135008	**699070**	1854129	**699570**	V5
1.8 i	E	1796	C18NZ	ES	07/94 ▸ 10/95	1135312	**699071**	1854124	**699571**	V5
2.0 i, 2.0 i 16V 2.0 i Turbo	E	1998	20NE/SEH, 20XEJ C20LET/NE	ES	10/88 ▸ 06/93	1135008	**699070**	1854129	**699570**	V5
2.0 i 16V, 2.0 i Turbo	E	1998	C20LET, X20XEV	ES	07/94 ▸ 10/95	1135312	**699071**	1854124	**699571**	V5
2.5 i V6	E	2498	C25XE	ES	03/93 ▸ 06/93	1135008	**699070**	1854129	**699570**	V5
1.7 D Turbo	D	1686	17TD	ES	09/91 ▸ 06/93	1135008	**699070**	1854129	**699570**	V5
1.7 D Turbo	D	1686	17TD	ES	07/94 ▸ 10/95	1135312	**699071**	1854124	**699571**	V5
1.7 D	D	1699	17D, 17DR	ES	11/88 ▸ 06/93	1135008	**699070**	1854129	**699570**	V5
1.7 D	D	1699	17DR	ES	07/94 ▸ 10/95	1135312	**699071**	1854124	**699571**	V5
CORSA I (93>2000)										
1.0 i 12V X3043503 ▸	E	973	X10XE	ES	03/98 ▸ 08/00	9116419		1854100	**699748**	V5
1.2 i 16V X3043503 ▸	E	1199	X12XE	ES	03/98 ▸ 08/00	9116419		1854100	**699748**	V5
1.4 i, 1.4 i 16V ▸ X4154088	E	1389	C14NZ, C14SE X14XE	ES	04/93 ▸ 08/00	1135295	**699072** ⊃MQ	9196953	**699572**	V5
1.6 i 16V	E	1598	C16XE, X16XE	ES	08/93 ▸ 08/00	1135295	**699072** ⊃MQ	9196953	**699572**	V5
CORSA II (2000>2003)										
1.4 i 16V	E	1389	Z14XE	ES	09/00 ▸ 08/03	9165714	**699270** ⊃MQ	R1580022	**699770**	CVC
1.8 16V	E	1796	Z18XE	ES	09/03 ▸ 06/06	9165714	**699270** ⊃MQ	R1580022	**699770**	CVC
1.7 DTi 16V, 1.7 Di 16V	D	1686	Y17DT, Y17DTL	ES	09/00 ▸ 08/03	24421642	**699306** ⊃MQ	93176916	**699806**	SD6V12

• **New** Nouveau **Neu** Nuevo **Novo** Nuovo **Nieuw** Nowi **Новый** Novy **Nou** Yeni **Νέους**

⊃MQ : **Valeo Matching Quality** Valeo gleichwertige Qualität **Valeo Calidad Equivalente**
Część Valeo o Jakości Porównywalnej z Oryginałem

Use technical code cross-list for precise selection page 648
Utiliser les pages Cross-List (page 648) pour identifier la bonne référence
Verwenden Sie die Code-Vergleichsliste zur gezielten Suche des adäquaten Bauteils, Seite 648
Utilizar la lista de códigos cruzados para una selección precisa, página 648
Utilizzare la crosslist dei codici tecnici per una scelta precisa, pag. 648
Gebruik de lijst met verwijzingen naar de technische 648 voor de juiste keuze, op pagina 648
U yj listy kodów technicznych Valeo na stronie 648 dla precyzyjnego doboru
A se folosi paginile crosslist ca sa identifiati referita corecta
Χρησιμοποιήστε την λίστα αντιστοιχίων κωδικών για να κάνετε σωστή και ακριβή επιλογή, σελίδα 648

		CC				OE NEW	Valeo NEW	OE ES	Valeo ES	
VAUXHALL (.../...)										
CORSA II (2003>)										
1.2 i 16V **1.2 i Dualfuel 16V**	E	1199	Z12LPG, Z12XE	ES	09/03 ▸			R1580030	**699912**	SD6V12
1.4 i Twinport 16V	E	1364	Z14XEP	ES	09/03 ▸			R1580030	**699912**	SD6V12
1.7 CDTI 16V	D	1686	Z17DTH	ES	09/03 ▸	24421642	**699306** ⊃MQ	93176916	**699806**	SD6V12
FRONTERA (91>98)										
2.8 TDi	D	2771	4JB1-TC	ES	04/95 ▸ 09/98	97114233	**699070**	1854129	**699570**	V5
FRONTERA (98>)										
2.2 DTi 16V	D	2171	Y22DTH	ES	06/02 ▸	R1580018	**699102**		**699602**	V5
2.2 DTi 16V	D	2172	X22DTH	ES	10/98 ▸ 05/02	24427890	**699102**		**699602**	V5
MERIVA										
1.4 i Twinport 16V	E	1364	Z14XEP	ES	09/04 ▸	9165714	**699270** ⊃MQ	R1580022	**699770**	CVC
1.6 i, 1.6 i 16V	E	1598	Z16SE/E4, Z16XE	ES	09/04 ▸	9165714	**699270** ⊃MQ	R1580022	**699770**	CVC
1.7 CDTi 16V, 1.7 DTi 16V	D	1686	Y17DT, Z17DTH	ES	05/03 ▸	24421642	**699306** ⊃MQ	93176916	**699806**	SD6V12
OMEGA										
2.0 i, 2.0 i 16V	E	1998	X20SE, X20XEV	ES	04/94 ▸	24432574	**699077** ⊃MQ	1854125	**699577**	V5
2.5 i V6	E	2498	X25XE-170	ES	04/94 ▸	24432574	**699077** ⊃MQ	1854125	**699577**	V5
3.0 i, 3.0 i V6	E	2962	X30XE	ES	06/94 ▸	24432574	**699077** ⊃MQ	1854125	**699577**	V5
3.2 i V6 24V	E	3175	Y32SE	ES	09/00 ▸	24432574	**699077** ⊃MQ	1854125	**699577**	V5
2.2 DTi 16V	D	2171	Y22DTH(120)	ES	09/00 ▸ 07/03			93176870	**699743**	V5
2.5 TD	D	2497	U25TD, X25TD	ES	01/97 ▸	90564976			**699767**	7SB16C
2.5 DTi 24V	D	2497	Y25DT	ES	09/01 ▸			93176871	**699894**	7SBU16C
SENATOR										
2.6 i	E	2594	C26NE	ES	09/90 ▸ 08/93	1135046			**699574**	V5
3.0 i, 3.0 i 24V	E	2968	C30NE, C30SE	ES	10/89 ▸ 08/93	1135046			**699574**	V5
SIGNUM										
1.8 i 16V	E	1796	Z18XE	ES	06/03 ▸	24411270	**699317**	93176866	**699817**	PXV16
1.8 i 16V	E	1796	Z18XER	ES	10/05 ▸			6854085	**813685**	SD7V16
2.0 i Turbo 16V	E	1998	Z20NET	ES	06/03 ▸	9225560	**699318**		**699818**	PXV16
2.2 DIG 16V	E	2198	Z22YH	ES	06/03 ▸	9225560	**699318**		**699818**	PXV16
3.2 i V6 24V ▸41048789	E	3175	Z32SE	ES	06/03 ▸	13140505	**699355**		**699855**	PXV16
1.9 CDTI 16V	D	1910	Z19DT, Z19DTH	ES	04/04 ▸	R1580054	•**699368**	93187228	**699868**	SD7V16
2.0 DTi 16V ▸41000251	D	1995	Y20DTH	ES	06/03 ▸	13140505	**699355**		**699855**	PXV16
2.2 DTi 16V ▸41000251	D	2171	Y22DTR	ES	06/03 ▸	13140505	**699355**		**699855**	PXV16
3.0 CDTi V6 24V	D	2958	Y30DT	ES	06/03 ▸	13140505	**699355**		**699855**	PXV16
TIGRA										
1.4 i 16V	E	1389	X14XE	ES	11/94 ▸ 01/99	1135295	**699072** ⊃MQ	9196953	**699572**	V5
1.6 i 16V	E	1598	X16XE	ES	11/94 ▸ 01/99	1135295	**699072** ⊃MQ	9196953	**699572**	V5

You must replace the receiver drier with the compressor
Vous devez remplacer la bouteille déshydratante avec le compresseur
Tauschen Sie den Trockner mit dem Kompressor
Es obligatorio cambiar el Filtro Deshidratante con el Compresor
Tem de substituir o filtro desidratante com o compressor
E' necessario cambiare il filtro disidratatore con il compressore
U moet de filterdroger samen met de compressor vervangen
Musisz wymienić filtr osuszacz przy wymianie sprę arki
Рекомендируем замену осушителя вместо с компрессором
Při výměně kompresoru je nutné vyměnit také vysoušeč
Nu untați sa schimbați uscatorul cu compresorul
Kompresörle birlikte nem alıcıyı da değiştirin
Πρέπει να αντικαταστήσετε το φίλτρο υγρού μαζί με το συμπιεστή

		cc				OE NEW	Valeo NEW	OE ES	Valeo ES	
VAUXHALL (.../...)										
TIGRA TWINTOP (2004>)										
1.4 i Twinport 16V	E	1364	Z14XEP	ES	07/04 ▸			R1580030	**699912**	SD6V12
1.8 i 16V	E	1796	Z18XE	ES	07/04 ▸	9165714	**699270** ⊃MQ	R1580022	**699770**	CVC
VECTRA (95>2002)										
1.6 i, 1.6 i 16V	E	1598	X16SZR, X16XEL	ES	10/95 ▸ 03/02	24427890	**699102** ⊃MQ		**699602**	V5
1.8 i 16V	E	1796	Z18XE	ES	10/95 ▸ 03/02	24427890	**699102** ⊃MQ		**699602**	V5
1.8 i 16V	E	1799	X18XE	ES	10/95 ▸ 03/02	24427890	**699102** ⊃MQ		**699602**	V5
2.0 i 16V	E	1998	X20XEV	ES	10/95 ▸ 08/00	24427890	**699102** ⊃MQ		**699602**	V5
2.2 i 16V	E	2198	Z22SE	ES	09/00 ▸ 03/02	9132925	**699307**		**699807**	PXV16
2.0 DTI 16V, 2.0 Di 2.0 Di 16V	D	1995	X20DTH, X20DTL	ES	08/96 ▸ 03/02	24427890	**699102** ⊃MQ		**699602**	V5
2.2 DTI 16V	D	2171	Y22DTR	ES	09/00 ▸ 03/02	24427890	**699102** ⊃MQ		**699602**	V5
VECTRA (2002>2005)										
1.8 i LPG 16V	G	1796	Z18XE-GPL	ES	04/02 ▸	24411270	**699317**	93176866	**699817**	PXV16
1.8 i 16V	E	1796	Z18XE	ES	04/02 ▸	24411270	**699317**	93176866	**699817**	PXV16
2.0 i Turbo 16V	E	1998	Z20NET	ES	05/03 ▸	9225560	**699318**		**699818**	PXV16
2.2 DGI 16V, 2.2 i 16V	E	2198	Z22SE, Z22YH	ES	04/02 ▸	9225560	**699318**		**699818**	PXV16
3.2 i V6 24V	E	3175	Z32SE	ES	04/02 ▸	13140505	**699355**		**699855**	PXV16
1.9 CDTI 16V	D	1910	Z19DT, Z19DTH	ES	04/04 ▸	R1580054	•**699368**	93187228	**699868**	SD7V16
2.0 DTI 16V ▸ 48000412	D	1995	Y20DTH	ES	04/02 ▸ 01/04	13140505	**699355**		**699855**	PXV16
2.2 DTI 16V ▸ 41000251	D	2171	Y22DTR	ES	04/02 ▸ 01/04	13140505	**699355**		**699855**	PXV16
3.0 CDTi V6 24V	D	2958	Y30DT	ES	07/03 ▸	13140505	**699355**		**699855**	PXV16
VECTRA (2005>)										
1.6 i 16V	E	1598	Z16XE	ES	10/05 ▸	13208187			**813682**	SD7V16
1.6 i 16V	E	1598	Z16XE	ES	10/05 ▸	13191996	**699318**		**699818**	PXV16
1.8 i 16V	E	1796	Z18XE, Z18XER	ES	10/05 ▸	13208187			**813682**	SD7V16
1.8 i 16V	E	1796	Z18XE	ES	10/05 ▸	13191996	**699318**		**699818**	PXV16
2.0 i Turbo 16V	E	1998	Z20NET	ES	10/05 ▸	13208187			**813682**	SD7V16
2.0 i Turbo 16V	E	1998	Z20NET	ES	10/05 ▸	13191996	**699318**		**699818**	PXV16
2.2 DIG 16V	E	2198	Z22YH	ES	10/05 ▸	13208187			**813682**	SD7V16
2.2 DGI 16V	E	2198	Z22YH	ES	10/05 ▸	13191996	**699318**		**699818**	PXV16
2.8 I V6 Turbo 24V	E	2792	Z28NEL	ES	10/05 ▸	12792669			**813686**	PXV16
1.9 CDTI, 1.9 CDTI 16V	D	1910	Z19DT, Z19DTH Z19DTL	ES	10/05 ▸	13197197			**813688**	V5
ZAFIRA (99>2003)										
1.6 i 16V ▸ 12094026	E	1598	X16XEL		01/01 ▸ 06/03	24430230	**699301**			7SBU16C
1.8 i 16V ▸ 12094026	E	1799	X18XE1		01/01 ▸ 06/03	24430230	**699301**			7SBU16C
2.2 i 16V	E	2198	Z22SE	ES	08/00 ▸ 06/03	9132925	**699307**		**699807**	PXV16
2.0 Di ▸ 1208350	D	1995	X20DTL	ES	01/01 ▸ 06/03	24430319			**699824**	7SBU16C
ZAFIRA (2003>2005)										
1.6 GNV 16V	G	1598	Z16YNG		07/03 ▸ 06/05	24430230	**699301**			7SBU16C
1.6 i 16V	E	1598	Z16XE		07/03 ▸ 06/05	24430230	**699301**			7SBU16C

• **New** Nouveau **Neu** Nuevo **Novo** Nuovo **Nieuw** Nowi **Новый** Novy **Nou** Yeni **Νέους**

⊃MQ : **Valeo Matching Quality** Valeo gleichwertige Qualität **Valeo Calidad Equivalente** Część Valeo o Jakości Porównywalnej z Oryginałem

Use technical code cross-list for precise selection page 648
Utiliser les pages Cross-List (page 648) pour identifier la bonne référence
Verwenden Sie die Code-Vergleichsliste zur gezielten Suche des adäquaten Bauteils, Seite 648
Utilizar la lista de códigos cruzados para una selección precisa, página 648
Utilizzare la crosslist dei codici tecnici per una scelta precisa, pag. 648
Gebruik de lijst met verwijzingen naar de technische 648 voor de juiste keuze, op pagina 648
U yj listy kodów technicznych Valeo na stronie 648 dla precyzyjnego doboru
A se folosi paginile crosslist ca sa identifiati referita corecta
Χρησιμοποιήστε την λίστα αντιστοιχίων κωδικών για να κάνετε σωστή και ακριβή επιλογή, σελίδα 648

		cc				OE NEW	Valeo NEW	OE ES	Valeo ES	
VAUXHALL (.../...)										
ZAFIRA (2003>2005) (.../...)										
1.8 i 16V	E	1796	Z18XE		07/03 ▸ 06/05	24430230	**699301**			7SBU16C
2.2 i 16V	E	2198	Z22SE	ES	07/03 ▸ 06/05	9132925	**699307**		**699807**	PXV16
2.0 DTI 16V	D	1995	X20DTH	ES	07/03 ▸ 06/05	24430319			**699824**	7SBU16C
2.2 DTI 16V	D	2171	Y22DTR	ES	07/03 ▸ 06/05	24430319			**699824**	7SBU16C
ZAFIRA II (2005>)										
1.6 i 16V	E	1598	Z16XEP	ES	07/05 ▸	13124750			**699862**	CVC
1.8 i 16V	E	1796	Z18XER	ES	09/05 ▸	13124750			**699862**	CVC
2.0 i Turbo 16V	E	1998	Z20LEH, Z20LER	ES	07/05 ▸	13139055			**813605**	CVC
2.2 i 16V	E	2198	Z22YH	ES	07/05 ▸	13124753			**813603**	CVC
1.9 CDTI, 1.9 CDTI 16V	D	1910	Z19DT, Z19DTH Z19DTL	ES	07/05 ▸	13124752			**813602**	CVC
VAUXHALL										
COMBO										
1.4 i	E	1389	C14NZ	ES	10/93 ▸ 09/01	1135295	**699072** ⊃MQ	9196953	**699572**	V5
COMBO (2002>)										
1.4 i Twinport GPL 16V	G	1364	Z14XEP	ES	07/04 ▸			R1580030	**699912**	SD6V12
1.4 i Twinport 16V	E	1364	Z14XEP	ES	07/04 ▸			R1580030	**699912**	SD6V12
1.7 CDTi 16V, 1.7 DTi 16V 1.7 Di 16V	D	1686	Y17DT, Y17DTL Z17DTH	ES	10/01 ▸	24421642			**699806**	SD6V12
MOVANO (2010>)										
2.3 CDTI 16V	D	2298	M9T.6.70 M9T.6.76	ES	05/10 ▸		**813144**	93161916	**813644**	KC-88
VOLKSWAGEN										
BORA										
1.4 i 16V	E	1390	AHW, AKQ, APE AXP, BCA	ES	09/98 ▸	1J0820803K	**813200** ⊃MQ		**813700**	SD7V16
1.6 FSI, 1.6 FSI 16V, 1.6 i 1.6 i 16V	E	1595	AEH, AKL, AVU AZD, BCB, BFQ	ES	09/98 ▸	1J0820803K	**813200** ⊃MQ		**813700**	SD7V16
1.6 FSI 16V	E	1595	BAD	ES	08/01 ▸ 05/05	6Q0820803D	**699383**		•**699883**	6SEU12C
1.6 i, 1.6 i 16V ▸ 1J-Y-300 000	E	1595	APF, AEH, AKL	ES	09/98 ▸ 08/99	1J0820805	•**813400**		**813700**	DCS17
1.6 FSI, 1.6 FSI 16V, 1.6 i 1.6 i 16V 1J-Y-300 001 ▸	E	1595	AKL, AVU, BFQ AEH	ES	08/99 ▸	1J0820803K	•**813400**		**813700**	DCS17
1.8 i Turbo 20V	E	1781	AGN, AGU, AUM AUQ	ES	02/99 ▸ 05/05	1J0820803K	**813200** ⊃MQ		**813700**	SD7V16
1.8 i 20V ▸ 1J-X-800 000	E	1781	AGN	ES	02/99 ▸ 08/99	1J0820805	•**813400**		**813700**	DCS17
1.8 i Turbo 20V 1J-Y-300 001 ▸	E	1781	AUM, AGU, AUQ	ES	08/99 ▸ 05/05	1J0820803K	•**813400**		**813700**	DCS17
2.0 i	E	1984	APK, AQY, AZH AZJ	ES	09/98 ▸ 05/05	1J0820803K	**813200** ⊃MQ		**813700**	SD7V16
2.0 i ▸ 1J-X-800 000	E	1984	APK, AQY	ES	09/98 ▸ 08/99	1J0820805	•**813400**		**813700**	DCS17
2.0 i 1J-Y-300 001 ▸	E	1984	AQY, AZJ, APK AZH	ES	05/00 ▸ 05/05	1J0820803K	•**813400**		**813700**	DCS17
2.3 i V5, 2.3 i V5 20V	E	2324	AGZ, AQN	ES	09/98 ▸ 05/05	1J0820803K	**813200** ⊃MQ		**813700**	SD7V16

You must replace the receiver drier with the compressor
Vous devez remplacer la bouteille déshydratante avec le compresseur
Tauschen Sie den Trockner mit dem Kompressor
Es obligatorio cambiar el Filtro Deshidratante con el Compresor
Tem de substituir o filtro desidratante com o compressor
E' necessario cambiare il filtro disidratatore con il compressore
U moet de filterdroger samen met de compressor vervangen
Musisz wymienić filtr osuszacz przy wymianie sprę arki
Рекомендируем замену осушителя вместо с компрессором
Při výměně kompresoru je nutné vyměnit také vysoušeč
Nu untați sa schimbați uscatorul cu compresorul
Kompresörle birlikte nem alıcıyı da değiştirin
Πρέπει να αντικαταστήσετε το φίλτρο υγρού μαζί με το συμπιεστή

		cc				OE NEW	Valeo NEW	OE ES	Valeo ES	
VOLKSWAGEN (.../...)										
BORA (.../...)										
2.8 i VR6, 2.8 i VR6 24V	E	2792	AQP, AUE, BDE	ES	05/99 ▸ 05/03	1J0820803K	**813200** ⊃MQ		**813700**	SD7V16
1.9 SDI, 1.9 TDi	D	1896	AGP/R, AHF, AJM ALH, AQM, ASV/Z ATD, AXR	ES	09/98 ▸ 05/05	1J0820803K	**813200** ⊃MQ		**813700**	SD7V16
1.9 SDi, 1.9 TDi ▸ 1J-Y-300 000	D	1896	AHF, AJM, AGR ALH, ATD, AQM	ES	09/98 ▸ 08/99	1J0820803F	•**813400**		**813700**	DCS17
1.9 SDi, 1.9 TDi 1J-Y-300 001 ▸	D	1896	ALH, ASV, AJM ATD, AUY, AHF ASZ, ARL, AGR AXR, AGP, AQM	ES	08/99 ▸ 05/05	1J0820803K	•**813400**		**813700**	DCS17
CORRADO										
1.8 i 16V	E	1781	KR	ES	04/89 ▸ 07/92	357820803C			**699514**	SD709
1.8 i G60	E	1781	PG	ES	09/88 ▸ 07/93	357820803A			**699517**	SD709
2.0 i 16V ▸ 50-N-020000	E	1984	9A	ES	08/91 ▸ 07/92	357820803C			**699514**	SD709
2.0 i 16V 50-P-000001 ▸	E	1984	9A	ES	08/92 ▸ 07/94	357820803R	**699013** ⊃MQ		**699513**	SD7V16
2.9 E VR6	E	2861	ABV	ES	08/92 ▸ 07/95	357820803R	**699013** ⊃MQ		**699513**	SD7V16
EOS										
1.6 FSI 16V	E	1598	BLF	ES	05/06 ▸	1K0820803N	**699357**	1K0820803N	**699857**	DCS17E
2.0 FSI 16V, 2.0 TFSI 16V	E	1984	BVY, BVZ, BWA	ES	05/06 ▸	1K0820803N	**699357**	1K0820859F	**699857**	DCS17E
3.2 i V6 24V	E	3189	BUB	ES	05/06 ▸	1K0820803P	**699357**	1K0820803N	**699857**	DCS17E
3.2 i V6 24V	E	3200	BUB		05/06 ▸	1K0820803N	**699357**			DCS17E
2.0 TDi 16V	D	1968	BMM/F	ES	05/06 ▸	1K0820859M	**699357**	1K0820803S	**699857**	DCS17E
FOX										
1.2 i	E	1198	BMD	ES	11/04 ▸	6Q0820803K	**699383**		•**699883**	6SEU12C
1.4 i	E	1400	BKR	ES	11/04 ▸	6Q0820803J	**699383**		•**699883**	6SEU12C
1.4 TDi	D	1422	BNM	ES	11/04 ▸	6Q0820803J	**699383**		•**699883**	6SEU12C
GOLF II (83>91)										
1.6	E	1595	ABN	ES	08/91 ▸ 07/92	357820803A			**699517**	SD709
1.8, 1.8 G60	E	1781	PG	ES	04/89 ▸ 07/91	357820803A			**699517**	SD709
1.6 TD	D	1588	RA, SB	ES	08/88 ▸ 10/91	357820803C			**699514**	SD709
GOLF II CABRIOLET (93>98)										
1.6 i	E	1598	AEK	ES	07/94 ▸ 12/95	1H0820803D	**699115** ⊃MQ		**699615**	SD7V16
1.8 i	E	1781	AAM, ABS	ES	09/93 ▸ 12/97	1H0820803D	**699115** ⊃MQ		**699615**	SD7V16
2.0 i	E	1984	2E, ADY	ES	09/93 ▸ 12/95	1H0820803D	**699115** ⊃MQ		**699615**	SD7V16
GOLF III (91>97)										
1.6, 1.6 i	E	1598	ABU, AEK, AFT AKS	ES	11/91 ▸ 02/99	1H0820803D	**699115** ⊃MQ		**699615**	SD7V16
1.8, 1.8 i	E	1781	AAM, ABS, ACC ADZ, ANP	ES	08/92 ▸ 04/99	1H0820803D	**699115** ⊃MQ		**699615**	SD7V16
2.0 16V, 2.0 E, 2.0 i	E	1984	2E, ABF, ADY, AEP AGG, AKR	ES	08/92 ▸ 04/99	1H0820803D	**699115** ⊃MQ		**699615**	SD7V16
2.8 VR6	E	2792	AAA	ES	07/92 ▸ 12/97	357820803R	**699013** ⊃MQ		**699513**	SD7V16

• **New** Nouveau **Neu** Nuevo **Novo** Nuovo **Nieuw** Nowi **Новый** Novy **Nou** Yeni **Νέους**

⊃MQ : **Valeo Matching Quality** Valeo gleichwertige Qualität **Valeo Calidad Equivalente**
Część Valeo o Jakości Porównywalnej z Oryginałem

Use technical code cross-list for precise selection page 648
Utiliser les pages Cross-List (page 648) pour identifier la bonne référence
Verwenden Sie die Code-Vergleichsliste zur gezielten Suche des adäquaten Bauteils, Seite 648
Utilizar la lista de códigos cruzados para una selección precisa, página 648
Utilizzare la crosslist dei codici tecnici per una scelta precisa, pag. 648
Gebruik de lijst met verwijzingen naar de technische 648 voor de juiste keuze, op pagina 648
U yj listy kodów technicznych Valeo na stronie 648 dla precyzyjnego doboru
A se folosi paginile crosslist ca sa identifiati referita corecta
Χρησιμοποιήστε την λίστα αντιστοιχίων κωδικών για να κάνετε σωστή και ακριβή επιλογή, σελίδα 648

		CC				OE NEW	Valeo NEW	OE ES	Valeo ES	
VOLKSWAGEN (.../...)										
GOLF III (91>97) (.../...)										
2.9 i VR6	E	2861	ABV	ES	01/94 ▸ 04/99	357820803R	**699013** ⊃MQ		**699513**	SD7V16
1.9 TD, 1.9 TDi	D	1896	1Z, AAZ, AFN, AHU ALE	ES	08/92 ▸ 04/99	1H0820803D	**699115** ⊃MQ		**699615**	SD7V16
GOLF III CABRIOLET (98>2002)										
1.6 i	E	1598	AFT, AKS	ES	03/98 ▸ 10/00	1H0820803D	**699115** ⊃MQ		**699615**	SD7V16
1.8 i	E	1781	AAM, ADZ, ANN ANP	ES	03/98 ▸ 10/00	1H0820803D	**699115** ⊃MQ		**699615**	SD7V16
2.0 i	E	1984	AGG, AKR, ATU AWF, AWG	ES	03/98 ▸ 06/02	1H0820803D	**699115** ⊃MQ		**699615**	SD7V16
1.9 TDi	D	1896	AFN, AHU, ALE AVG	ES	03/98 ▸ 12/01	1H0820803D	**699115** ⊃MQ		**699615**	SD7V16
GOLF IV (97>2003)										
1.4 i 16V	E	1390	AHW, AKQ, AXP BCA	ES	10/97 ▸	1J0820803K	**813200** ⊃MQ		**813700**	SD7V16
1.6 i, 1.6 i 16V	E	1595	AEH, AKL, APF AUS, AVU, AZD BCB, BFQ	ES	10/97 ▸	1J0820803K	**813200** ⊃MQ		**813700**	SD7V16
1.6 FSI 16V	E	1595	BAD	ES	08/01 ▸ 06/06	6Q0820803D	**699383**		•**699883**	6SEU12C
1.6 FSI	E	1595	BAD		08/01 ▸ 06/06	6Q0820803J	**699383**			6SEU12C
1.6 i, 1.6 i 16V	E	1595	AKL, AEH, APF AVU	ES	10/97 ▸	1J0820805	•**813400**		**813700**	DCS17
1.6 i, 1.6 i 16V	E	1595	AKL, AVU, AEH BFQ, APF	ES	05/00 ▸	1J0820803K	•**813400**		**813700**	DCS17
1.8 i, 1.8 i 20V 1.8 i Turbo/20V	E	1781	AGN, AGU, ARZ AUM, AUQ	ES	10/97 ▸	1J0820803K	**813200** ⊃MQ		**813700**	SD7V16
1.8 i, 1.8 i 20V 1.8 i Turbo/20V ▸ 1J-Y-300 000	E	1781	AGN, AGU, AUM ARZ	ES	10/97 ▸ 04/01	1J0820805	•**813400**		**813700**	DCS17
1.8 i, 1.8 i 20V 1.8 i Turbo/20V 1J-2-000 001 ▸	E	1781	AGU, AUM, ARZ AGN, AUQ	ES	05/00 ▸	1J0820803K	•**813400**		**813700**	DCS17
2.0 i	E	1984	APK, AQY, AZG AZH, AZJ, BEH	ES	08/98 ▸	1J0820803K	**813200** ⊃MQ		**813700**	SD7V16
2.0 i ▸ 1J-1-900 000	E	1984	APK, AZH, AQY	ES	08/98 ▸ 04/01	1J0820805	•**813400**		**813700**	DCS17
2.0 i 1J-Y-300 001 ▸	E	1984	AQY, AZJ, AZH APK, BEH, AZG	ES	05/00 ▸	1J0820803K	•**813400**		**813700**	DCS17
2.3 i VR5, 2.3 i VR5 20V	E	2324	AGZ, AQN	ES	10/97 ▸	1J0820803K	**813200** ⊃MQ		**813700**	SD7V16
2.8 i V6, 2.8 i VR6	E	2792	AQP, AUE, BDE	ES	05/99 ▸	1J0820803K	**813200** ⊃MQ		**813700**	SD7V16
3.2 i V6 R32	E	3189	BFH	ES	06/02 ▸ 05/04	1J0820803K	**813200** ⊃MQ		**813700**	SD7V16
1.9 SDI, 1.9 TDi ▸ 1J-1-900 000	D	1896	AGP/R, AHF, AJM ALH, AQM, ARL ASV/Z, ATD, AUY	ES	10/97 ▸	1J0820803K	**813200** ⊃MQ		**813700**	SD7V16
1.9 SDi, 1.9 TDi 1J-Y-300 001 ▸ 1J-1-900 000	D	1896	AGP/R, ATD, AUY ASV, AHF, AQM AJM, ARL, ALH	ES	10/97 ▸	1J0820805	•**813400**		**813700**	DCS17
1.9 SDi, 1.9 TDi 1J-Y-300 001 ▸ 1J-1-900 000	D	1896	AHF, ATD, ASZ AGP/R, ASV, ALH AQM, ARL, AUY AJM, AXR	ES	05/00 ▸	1J0820803K	•**813400**		**813700**	DCS17

You must replace the receiver drier with the compressor
Vous devez remplacer la bouteille déshydratante avec le compresseur
Tauschen Sie den Trockner mit dem Kompressor
Es obligatorio cambiar el Filtro Deshidratante con el Compresor
Tem de substituir o filtro desidratante com o compressor
E' necessario cambiare il filtro disidratatore con il compressore
U moet de filterdroger samen met de compressor vervangen
Musisz wymienić filtr osuszacz przy wymianie sprę arki
Рекомендируем замену осушителя вместо с компрессором
Při výměně kompresoru je nutné vyměnit také vysoušeč
Nu untați sa schimbați uscatorul cu compresorul
Kompresörle birlikte nem alıcıyı da değiştirin
Πρέπει να αντικαταστήσετε το φίλτρο υγρού μαζί με το συμπιεστή

		cc				OE NEW	Valeo NEW	OE ES	Valeo ES	
VOLKSWAGEN (.../...)										
GOLF V (2003>)										
1.4 FSI/TSI 16V, 1.4 i 16V	E	1390	BCA, BKG, BLN	ES	10/03 ▸	5K0820803B	**699357**	1K0820859M	**699857**	DCS17E
1.6 i	E	1595	BGU, BSE, BSF	ES	01/04 ▸	5K0820803B	**699357**	1K0820803N	**699857**	DCS17E
1.6 FSI 16V	E	1598	BAG, BLF, BLP	ES	10/03 ▸	5K0820803B	**699357**	1K0820859C	**699857**	DCS17E
2.0 FSI 16V, 2.0 i 16V 2.0 TFSI	E	1984	AXW, AXX, BLR BLX, BLY, BVY BVZ	ES	10/03 ▸	5K0820803B	**699357**	1K0820803N	**699857**	DCS17E
3.2 i V6 R32	E	3189	BUB	ES	08/05 ▸	5K0820803B	**699357**	1K0820803S	**699857**	DCS17E
1.9 TDI	D	1896	BJB,BKC,BLS,BLS/F BRU,BXE,BXF	ES	10/03 ▸	5K0820803B	**699357**	1K0820803S	**699857**	DCS17E
2.0 SDI, 2.0 TDI 2.0 TDI 16V	D	1968	AZV,BDK,BKD,BMM/F BMN,BVB	ES	10/03 ▸	5K0820803B	**699357**	1K0820803S	**699857**	DCS17E
GOLF PLUS (2005>)										
1.4 FSI/TSi 16V, 1.4 i 16V	E	1390	BCA,BLG,BLN,BMY BUD,CAVD,CAXA	ES	01/05 ▸	1K0820803P	**699357**	1K0820803Q	**699857**	DCS17E
1.6 i	E	1595	BSE,BSF,CCSA	ES	05/05 ▸	1K0820803N	**699357**	1K0820859D	**699857**	DCS17E
1.6 FSI 16V	E	1598	BLF	ES	01/05 ▸	1K0820859M	**699357**	1K0820859M	**699857**	DCS17E
2.0 FSI 16V	E	1984	BLR,BLY,BVY,BVZ	ES	11/05 ▸	1K0820803N	**699357**	1K0820859M	**699857**	DCS17E
1.9 TDi	D	1896	BKC,BLS,BLS/F,BRU BXE,BXF	ES	01/05 ▸	1K0820859M	**699357**	1K0820803S	**699857**	DCS17E
2.0 TDi 16V	D	1968	AZV, BEE, BKD BMM, BVB	ES	01/05 ▸	1K0820803Q	**699357**	1K0820803S	**699857**	DCS17E
2.0 TDi,2.0 TDi 16V	D	1968	AZV,BEE,BKD,BMM/F BVB	ES	01/05 ▸	1K0820803Q	**699357**	1K0820803S	**699857**	DCS17E
GOLF VI (2008>)										
1.4 TFSi,1.4 TSi,1.4 i 16V	E	1390	CAVD,CAXA,CGGA	ES	10/08 ▸	1K0820859T		8J0260805	**•813838**	6SEU14C
1.6 i 1K9-900 001 ▸	F	1595	CHGA	ES	03/09 ▸	1K0820859T		8J0260805	**•813838**	6SEU14C
1.6 i	E	1595	BSE,BSF,CCSA	ES	10/08 ▸	1K0820859T		8J0260805	**•813838**	6SEU14C
2.0 TDI 16V	D	1968	CBAA/F,CBAB/F CBDC/F	ES	10/08 ▸	1K0820803P	**699357**	1K0820859F	**699857**	DCS17E
2.0 TDI 16V	D	1968	CBAA,CBAB,CBDC	ES	10/08 ▸	5N0820803C		8J0260805	**•813838**	6SEU14C
GOLF VI PLUS (2009>)										
1.4 TSI 16V,1.4 i 16V	E	1390	BUD,CAVD,CAXA CGGA	ES	01/09 ▸	1K0820859T		8J0260805	**•813838**	6SEU14C
1.6 i	F	1595	CHGA	ES	05/09 ▸	1K0820859T		8J0260805	**•813838**	6SEU14C
1.6 i	E	1595	BSE,BSF,CCSA	ES	01/09 ▸	1K0820859T		8J0260805	**•813838**	6SEU14C
1.6 TDI 16V	D	1598	CAYB,CAYC	ES	01/09 ▸	5N0820803		8J0260805	**•813838**	6SEU14C
2.0 TDI 16V	D	1968	CBDB,CBDC	ES	01/09 ▸	5N0820803		8J0260805	**•813838**	6SEU14C
JETTA (83>92)										
1.6 TD	D	1588	RA, SB	ES	08/88 ▸ 10/91	357820803C			**699514**	SD709
JETTA (2005>)										
1.4 TSi 16V	E	1390	BLG,BMY,CAXA	ES	07/06 ▸	1K0820803P	**699357**	1K0820859M	**699857**	DCS17E
1.6 i	E	1595	BSE, BSF	ES	08/05 ▸	1K0820803N	**699357**	1K0820859M	**699857**	DCS17E
1.6 FSI 16V	E	1598	BLF	ES	09/05 ▸	1K0820859M	**699357**	1K0820803Q	**699857**	DCS17E
2.0 FSI 16V, 2.0 TFSI 16V	E	1984	BLR, BLY, BVY BVZ, BWA	ES	08/05 ▸	1K0820803N	**699357**	1K0820859D	**699857**	DCS17E
1.9 TDI	D	1896	BKC, BLS		08/05 ▸	1K0820803S	**699357**			PXE16
1.9 TDI	D	1896	BKC,BLS,BXE	ES	08/05 ▸	1K0820803Q	**699357**	1K0820803S	**699857**	DCS17E
2.0 TDi 16V	D	1968	AZV, BKD, BMM		08/05 ▸	1K0820803S	**699357**			PXE16
2.0 TDi,2.0 TDi 16V	D	1968	AZV,BKD,BMM/F	ES	08/05 ▸	1K0820803Q	**699357**	1K0820803S	**699857**	DCS17E
2.0 TDi,2.0 TDi 16V ▸ 1K-6-793 246	D	1968	AZV,BKD,BMM/F,BMN CBDB/F	ES	08/05 ▸	1K0820803P	**699357**	1K0820803S	**699857**	DCS17E

• **New** Nouveau **Neu** Nuevo **Novo** Nuovo **Nieuw** Nowi **Новый** Novy **Nou** Yeni **Νέους**

Valeo Matching Quality Valeo gleichwertige Qualität **Valeo Calidad Equivalente**
Część Valeo o Jakości Porównywalnej z Oryginałem

Use technical code cross-list for precise selection page 648
Utiliser les pages Cross-List (page 648) pour identifier la bonne référence
Verwenden Sie die Code-Vergleichsliste zur gezielten Suche des adäquaten Bauteils, Seite 648
Utilizar la lista de códigos cruzados para una selección precisa, página 648
Utilizzare la crosslist dei codici tecnici per una scelta precisa, pag. 648
Gebruik de lijst met verwijzingen naar de technische 648 voor de juiste keuze, op pagina 648
U yj listy kodów technicznych Valeo na stronie 648 dla precyzyjnego doboru
A se folosi paginile crosslist ca sa identifiati referita corecta
Χρησιμοποιήστε την λίστα αντιστοιχίων κωδικών για να κάνετε σωστή και ακριβή επιλογή, σελίδα 648

		cc				OE NEW	Valeo NEW	OE ES	Valeo ES	
VOLKSWAGEN (.../...)										
JETTA (2010>)										
1.2 TSi 105	E	1197	CBZB	ES	10/10 ▸	5N0820803C		8J0260805	•**813838**	6SEU14C
1.4 TSi 122 16V **1.4 TSi 160 16V**	E	1390	CAVD,CAXA	ES	04/11 ▸	1K0820859T		8J0260805	•**813838**	6SEU14C
2.0 GLi 200 16V	E	1984	CBFA,CCTA,CCZA	ES	12/10 ▸	1K0820808A		8J0260805	•**813838**	6SEU14C
2.0 TDI 140 16V	D	1968	CFFB	ES	10/10 ▸	5N0820803C		8J0260805	•**813838**	6SEU14C
LUPO										
1.0 i	E	997	AHT	ES	10/98 ▸ 05/00	6N0820803C	**699303**		•**699803**	SD6V12
1.0 i	E	999	AER, AHT, ALD ALL, ANV, AUC	ES	10/98 ▸ 07/05	6N0820803C	**699303**		•**699803**	SD6V12
1.4 i, 1.4 i 16V	E	1390	AFK, AHW, AKQ APE, AQQ, AUA AUB, AUD, BBY	ES	10/98 ▸ 07/05	6N0820803C	**699303**		•**699883**	6SEU12C
1.4 FSI 16V	E	1390	ARR	ES	09/00 ▸ 07/05	6Q0820803J	**699383**		•**699803**	SD6V12
1.6 i 16V	E	1598	AVY	ES	06/00 ▸ 07/05	6N0820803C	**699303**		•**699803**	SD6V12
1.4 TDi	D	1422	AMF	ES	05/99 ▸ 07/05	6N0820803C	**699303**		•**699803**	SD6V12
1.7 SDI	D	1716	AKU	ES	10/98 ▸ 05/00	6N0820803C	**699303**		•**699803**	SD6V12
NEW BEETLE (98>2001)										
1.6 i	E	1595	AWH, AYD	ES	11/99 ▸ 05/01	1J0820803K	**813200** ↻MQ		**813700**	SD7V16
1.6 i	E	1595	AWH, AYD	ES	11/99 ▸ 05/01	1J0820803F	•**813400**		**813700**	DCS17
1.6 i	E	1595	AYD, AWH	ES	11/99 ▸ 05/01	1J0820803K	•**813400**		**813700**	DCS17
1.8 i Turbo 20V	E	1781	APH, AVC, AWU AWV	ES	01/99 ▸ 05/01	1J0820803K	**813200** ↻MQ		**813700**	SD7V16
1.8 i Turbo 20V	E	1781	AWU, AWV, APH AVC	ES	01/99 ▸ 05/01	1J0820803F	•**813400**		**813700**	DCS17
1.8 i Turbo 20V	E	1781	AVC, AWV, APH AWU	ES	06/99 ▸ 05/01	1J0820803K	•**813400**		**813700**	DCS17
2.0 i	E	1984	AEG, APK, AQY	ES	01/98 ▸ 05/01	1J0820803K	**813200** ↻MQ		**813700**	SD7V16
2.0 i	E	1984	AQY, AEG, APK	ES	01/98 ▸ 05/01	1J0820803F	•**813400**		**813700**	DCS17
2.0 i 1C-Y-405165 ▸	E	1984	AQY, APK, AEG	ES	06/99 ▸ 05/01	1J0820803K	•**813400**		**813700**	DCS17
2.3 i V5 20V	E	2324	AQN	ES	10/00 ▸ 05/01	1J0820803K	**813200** ↻MQ		**813700**	SD7V16
3.2 i V6 24V	E	3189	AXJ	ES	10/00 ▸ 05/01	1J0820803K	**813200** ↻MQ		**813700**	SD7V16
1.9 TDi	D	1896	ALH, ATD	ES	11/98 ▸ 05/01	1J0820803K	**813200** ↻MQ		**813700**	SD7V16
1.9 TDi	D	1896	ALH, ATD	ES	06/99 ▸ 05/01	1J0820803K	•**813400**		**813700**	DCS17
1.9 TDi	D	1896	ALH, ATD	ES	11/98 ▸ 05/01	1J0820803F	•**813400**		**813700**	DCS17
NEW BEETLE (2001>2005)										
1.4 i 16V	E	1390	BCA	ES	08/01 ▸ 06/05	1J0820803K	**813200** ↻MQ		**813700**	SD7V16
1.6 i	E	1595	AYD, BFS	ES	06/01 ▸ 06/05	1J0820803K	**813200** ↻MQ		**813700**	SD7V16
1.6 i	E	1595	BFS, AYD	ES	06/01 ▸ 06/05	1J0820803K	•**813400**		**813700**	DCS17
1.8 i Turbo 20V	E	1781	AWP, AWU, AWV	ES	06/01 ▸ 06/05	1J0820803K	**813200** ↻MQ		**813700**	SD7V16
1.8 i Turbo 20V	E	1781	AWV, AWU, AWP	ES	06/01 ▸ 06/05	1J0820803K	•**813400**		**813700**	DCS17
2.0 i	E	1984	AEG, APK, AQY AZJ, BEJ	ES	06/01 ▸ 06/05	1J0820803K	**813200** ↻MQ		**813700**	SD7V16
2.0 i	E	1984	AZJ, APK, AQY BEJ, AEG	ES	06/01 ▸ 06/05	1J0820803K	•**813400**		**813700**	DCS17
2.3 i V5 20V	E	2324	AQN	ES	06/01 ▸ 06/05	1J0820803K	**813200** ↻MQ		**813700**	SD7V16

You must replace the receiver drier with the compressor
Vous devez remplacer la bouteille déshydratante avec le compresseur
Tauschen Sie den Trockner mit dem Kompressor
Es obligatorio cambiar el Filtro Deshidratante con el Compresor
Tem de substituir o filtro desidratante com o compressor
E' necessario cambiare il filtro disidratatore con il compressore
U moet de filterdroger samen met de compressor vervangen
Musisz wymienić filtr osuszacz przy wymianie sprę arki
Рекомендируем замену осушителя вместо с компрессором
Při výměně kompresoru je nutné vyměnit také vysoušeč
Nu untați sa schimbați uscatorul cu compresorul
Kompresörle birlikte nem alıcıyı da değiştirin
Πρέπει να αντικαταστήσετε το φίλτρο υγρού μαζί με το συμπιεστή

		cc				OE NEW	Valeo NEW	OE ES	Valeo ES	
VOLKSWAGEN (.../...)										
NEW BEETLE (2001>2005) (.../...)										
1.9 TDi	D	1896	ALH, ATD	ES	06/01 ▸ 06/05	1J0820803K	**813200** ⊃MQ		**813700**	SD7V16
1.9 TDi	D	1896	ALH, ATD	ES	06/01 ▸ 06/05	1J0820803K	•**813400**		**813700**	DCS17
NEW BEETLE (2005>)										
1.4 i 16V	E	1390	BCA	ES	07/05 ▸	1J0820803K	**813200** ⊃MQ		**813700**	SD7V16
1.6 i, 1.6 i 16V	E	1595	BFS	ES	07/05 ▸	1J0820803K	**813200** ⊃MQ		**813700**	SD7V16
1.6 i, 1.6 i 16V	E	1595	BFS	ES	07/05 ▸	1J0820803K	•**813400**		**813700**	DCS17
1.8 i Turbo 20V	E	1781	AWU	ES	07/05 ▸	1J0820803K	**813200** ⊃MQ		**813700**	SD7V16
1.8 i Turbo 20V	E	1781	AWU	ES	07/05 ▸	1J0820803K	•**813400**		**813700**	DCS17
2.0 i, 2.0 i 16V	E	1984	AZJ, BER, BHP	ES	07/05 ▸	1J0820803K	**813200** ⊃MQ		**813700**	SD7V16
2.0 i, 2.0 i 16V	E	1984	AZJ, BER, BHP	ES	07/05 ▸	1J0820803K	•**813400**		**813700**	DCS17
1.9 TDi	D	1896	BEW, BSW	ES	07/05 ▸	1J0820803K	**813200** ⊃MQ		**813700**	SD7V16
1.9 TDi	D	1896	BSW, BEW	ES	07/05 ▸	1J0820803K	•**813400**		**813700**	DCS17
NEW BEETLE (2011>)										
1.2 TSi 105 8V	E	1197	CBZB	ES	07/11 ▸	1K0820859T		8J0260805	•**813838**	6SEU14C
1.6 TDi 105 16V	D	1598	CAYC	ES	10/11 ▸	5N0820803C		8J0260805	•**813838**	6SEU14C
PASSAT (88>93)										
1.6, 1.6 i	E	1595	1F, ABN, EZ	ES	08/88 ▸ 07/92	357820803C			**699514**	SD709
1.8, 1.8 i, 1.8 i 16V	E	1781	AAM, ABS, KR, PB PF, RP	ES	04/88 ▸ 10/93	357820803C			**699514**	SD709
1.8 ▸ 31N-500000	E	1781	PG	ES	09/89 ▸	357820803A			**699517**	SD709
2.0, 2.0 i, 2.0 i 16V ▸ 31-NB400000	E	1984	2E, 9A	ES	04/88 ▸	357820803C			**699514**	SD709
2.8 i, 2.8 i V6, 2.8 i VR6 31-PE000 001 ▸	E	2792	AAA	ES	08/92 ▸ 10/93	357820803R	**699013** ⊃MQ		**699513**	SD7V16
PASSAT (93>97)										
1.8 i	E	1781	ABS	ES	10/93 ▸ 09/94	1H0820803D	**699115** ⊃MQ		**699615**	SD7V16
2.0 i, 2.0 i 16V	E	1984	2E, ABF, ADY	ES	10/93 ▸ 05/97	1H0820803D	**699115** ⊃MQ		**699615**	SD7V16
2.8 i VR6	E	2792	AAA	ES	10/93 ▸ 12/96	357820803R	**699013** ⊃MQ		**699513**	SD7V16
2.9 i VR6	E	2861	ABV	ES	01/94 ▸ 05/97	1H0820803D	**699115** ⊃MQ		**699615**	SD7V16
1.9 TD, 1.9 TDi	D	1896	1Z, AAZ, AFN	ES	10/93 ▸ 12/96	1H0820803D	**699115** ⊃MQ		**699615**	SD7V16
PASSAT (96>2000)										
1.6 i	E	1595	ADP	ES	10/96 ▸ 10/97	8D0260805D	**699222**		**699722**	DCW17D
1.6 i	E	1595	AHL, ANA	ES	10/96 ▸ 08/00	8D0260805J	**699376** ⊃MQ		•**699876**	7SBU16C
1.8 i, 1.8 i 20V **1.8 i Turbo 20V**	E	1781	ADR, AEB, AFY ANB, APT, APU ARG	ES	10/96 ▸ 08/00	8D0260805D	**699222**		**699722**	DCW17D
2.8 i V6 30V	E	2771	ACK, AGE, ALG APR, AQD, ATX		05/97 ▸ 08/00	4B0260805B	**813166**			7SBU16C
1.9 TDi	D	1896	AFN, AHH/U, AVG	ES	10/96 ▸ 08/00	8D0260805D	**699222**		**699722**	DCW17D

• **New** Nouveau **Neu** Nuevo **Novo** Nuovo **Nieuw** Nowi **Новый** Nowy **Nou** Yeni **Νέους**

⊃MQ : **Valeo Matching Quality** Valeo gleichwertige Qualität **Valeo Calidad Equivalente**
Część Valeo o Jakości Porównywalnej z Oryginałem

Use technical code cross-list for precise selection page 648
Utiliser les pages Cross-List (page 648) pour identifier la bonne référence
Verwenden Sie die Code-Vergleichsliste zur gezielten Suche des adäquaten Bauteils, Seite 648
Utilizar la lista de códigos cruzados para una selección precisa, página 648
Utilizzare la crosslist dei codici tecnici per una scelta precisa, pag. 648
Gebruik de lijst met verwijzingen naar de technische 648 voor de juiste keuze, op pagina 648
U yj listy kodów technicznych Valeo na stronie 648 dla precyzyjnego doboru
A se folosi paginile crosslist ca sa identifiati referita corecta
Χρησιμοποιήστε την λίστα αντιστοιχίων κωδικών για να κάνετε σωστή και ακριβή επιλογή, σελίδα 648

		cc				OE NEW	Valeo NEW	OE ES	Valeo ES	
VOLKSWAGEN (.../...)										
PASSAT (96>2000) (.../...)										
2.5 TDi V6	D	2496	AFB, AKN	ES	08/98 ▸ 08/00	4B0260805C	**699275** MQ		**699775**	7SBU16C
2.5 TDi V6	D	2496	AFB	ES	09/99 ▸ 08/00	8D0260805D	**699222**		**699722**	DCW17D
PASSAT (2000>2005)										
1.6 i	E	1595	ALZ, ANA	ES	10/00 ▸ 05/05	8D0260805J	**699376** MQ		•**699876**	7SBU16C
1.8 i Turbo 20V	E	1781	AWM, AWT	ES	10/00 ▸ 05/05	8D0260805J	**699376** MQ		•**699876**	7SBU16C
2.0 i, 2.0 i 20V	E	1984	ALT, AZM	ES	10/00 ▸ 05/05	8D0260805J	**699376** MQ		•**699876**	7SBU16C
2.8 i V6	E	2771	AMX, ATQ, BBG		10/00 ▸ 05/05	4B0260805B	**813166**			7SBU16C
4.0 i W8	E	3999	BDN,BDP	ES	10/00 ▸ 05/05	8D0260805B	**699376**		•**699876**	7SBU16C
1.9 TDi	D	1896	AVB/F, AWX	ES	10/00 ▸	8D0260805J	**699376** MQ		•**699876**	7SBU16C
2.0 TDI	D	1968	BGW	ES	11/03 ▸	8D0260805J	**699376** MQ		•**699876**	7SBU16C
2.5 TDi, 2.5 TDi V6	D	2496	AKN, BDG	ES	10/00 ▸	4B0260805C	**699275** MQ		**699775**	7SBU16C
PASSAT (2005>)										
1.4 FSi 16V,1.4 TFSi 16V	E	1390	CAXA	ES	05/07 ▸	1K0820803P	**699357**	1K0820859E	**699857**	DCS17E
1.6 i	E	1595	BSE, BSF	ES	03/05 ▸	1K0820803N	**699357**	1K0820859D	**699857**	DCS17E
1.6 FSI 16V	E	1598	BLF	ES	03/05 ▸	1K0820803P	**699357**	1K0820859C	**699857**	DCS17E
1.8 FSi 16V	E	1798	BZB	ES	05/07 ▸	1K0820803N	**699357**	1K0820859M	**699857**	DCS17E
2.0 i 16V, 2.0 TFSI	E	1984	AXX, BPY, BWA	ES	03/05 ▸	1K0820803N	**699357**	1K0820859M	**699857**	DCS17E
2.0 FSI 16V	E	1984	BLR, BLY, BVX BVY, BVZ		03/05 ▸	1K0820803N	**699357**			DCS17E
2.0 TFSI 16V	E	1984	CAW		11/07 ▸	1K0820859F	**699357**			PXE16
3.2 FSi V6 24V	E	3168	AXZ	ES	03/05 ▸	1K0820803Q	**699357**	1K0820803S	**699857**	DCS17E
3.2 FSI V6 24V	E	3189	AXZ		03/05 ▸	1K0820803S	**699357**			PXE16
3.6 FSI V6 24V	E	3597	BWS	ES	04/07 ▸	1K0820803N	**699357**	1K0820859M	**699857**	DCS17E
3.6 FSI V6 24V	E	3598	BLV		09/05 ▸	1K0820803S	**699357**			PXE16
3.6 FSi V6 24V	E	3598	BLV	ES	09/05 ▸	1K0820803Q	**699357**	1K0820803S	**699857**	DCS17E
1.9 TDi	D	1896	BKC,BLS,BLS/F,BXE	ES	03/05 ▸	1K0820803N	**699357**	1K0820859F	**699857**	DCS17E
2.0 TDI	D	1968	BKP, BMA/P/R, BUZ BVD/E		03/05 ▸	1K0820803S	**699357**			PXE16
2.0 TDi,2.0 TDi 16V	D	1968	BKP,BMA,BMP,BMR BUZ,BVD,BVE,BWV	ES	03/05 ▸	1K0820803Q	**699357**	1K0820803S	**699857**	DCS17E
PASSAT CC										
1.8 TFSI 16V	E	1798	BZB	ES	05/08 ▸	1K0820803N	**699357**	1K0820859M	**699857**	DCS17E
2.0 TFSI 16V	E	1984	CAWB	ES	05/08 ▸ 05/10	1K0820803N	**699357**	1K0820859F	**699857**	DCS17E
3.6 FSI V6 24V	E	3597	BWS	ES	05/08 ▸ 05/10	1K0820803N	**699357**	1K0820859F	**699857**	DCS17E
2.0 TDI,2.0 TDI 16V	D	1968	CBAA/F,CBAB/F CBBB/F	ES	05/08 ▸ 11/10	1K0820803N	**699357**	1K0820859F	**699857**	DCS17E
PHAETON (2002>2007)										
5.0 TDi V10	D	4921	AJS	ES	11/02 ▸ 05/06	3D0820805E		7H0820805E	•**813829**	7SEU
POLO (94>99)										
1.0 i	E	999	AER, ALL	ES	07/96 ▸ 12/99	1H0820803D	**699115** MQ		**699615**	SD7V16
1.0 i	E	999	AER	ES	07/96 ▸ 12/99	6N0820803A			**699515**	SD7B10
1.0 i	E	1043	AEV	ES	10/94 ▸ 06/96	1H0820803D	**699115** MQ		**699615**	SD7V16
1.0 i	E	1043	AEV	ES	10/94 ▸ 06/96	6N0820803A			**699515**	SD7B10

You must replace the receiver drier with the compressor
Vous devez remplacer la bouteille déshydratante avec le compresseur
Tauschen Sie den Trockner mit dem Kompressor
Es obligatorio cambiar el Filtro Deshidratante con el Compresor
Tem de substituir o filtro desidratante com o compressor
E' necessario cambiare il filtro disidratatore con il compressore
U moet de filterdroger samen met de compressor vervangen

Musisz wymienić filtr osuszacz przy wymianie sprę arki
Рекомендируем замену осушителя вместо с компрессором
Při výměně kompresoru je nutné vyměnit také vysoušeč
Nu untați sa schimbați uscatorul cu compresorul
Kompresörle birlikte nem alıcıyı da değiştirin
Πρέπει να αντικαταστήσετε το φίλτρο υγρού μαζί με το συμπεστή

		CC				OE NEW	Valeo NEW	OE ES	Valeo ES	
VOLKSWAGEN (.../...)										
POLO (94>99) (.../...)										
1.3 i	E	1296	ADX	ES	10/94 ▸ 06/95	6N0820803A			**699515**	SD7B10
1.3 i	E	1296	ADX	ES	10/94 ▸ 04/97	1H0820803D	**699115** ⊃MQ		**699615**	SD7V16
1.4 i, 1.4 i 16V	E	1390	AEX, AFH, AKV ANX, APQ	ES	07/95 ▸ 12/99	1H0820803D	**699115** ⊃MQ		**699615**	SD7V16
1.4 i, 1.4 i 16V	E	1390	AEX, AFH	ES	07/95 ▸ 12/99	6N0820803A			**699515**	SD7B10
1.6 i	E	1595	1F	ES	05/96 ▸ 09/97	1H0820803D	**699115** ⊃MQ		**699615**	SD7V16
1.6 i	E	1598	AEA, AEE, AHS	ES	10/94 ▸ 12/99	6N0820803A			**699515**	SD7B10
1.6 i, 1.6 i 16V	E	1598	AEA, AEE, AFT AHS, AJV, ALM	ES	10/94 ▸ 12/99	1H0820803D	**699115** ⊃MQ		**699615**	SD7V16
1.8 i	E	1781	ADD	ES	03/98 ▸ 08/99	1H0820803D	**699115** ⊃MQ		**699615**	SD7V16
1.7 SDI	D	1716	AHG, AKU, AKW	ES	04/97 ▸ 12/99	1H0820803D	**699115** ⊃MQ		**699615**	SD7V16
1.9 D, 1.9 SDI	D	1896	AEF, AGD	ES	01/95 ▸ 04/98	6N0820803A			**699515**	SD7B10
1.9 D, 1.9 SDI, 1.9 TDi	D	1896	AEF/Y, AFN, AGD AHU, ALE	ES	10/94 ▸ 12/99	1H0820803D	**699115** ⊃MQ		**699615**	SD7V16
POLO (99>2001)										
1.0 i	E	999	ALD, AUC	ES	10/99 ▸ 09/01	6N0820803B	**699303**		**•699803**	SD6V12
1.4 i, 1.4 i 16V	E	1390	ANW, APE, AUA AUD	ES	10/99 ▸ 09/01	1J0820803K	**813200** ⊃MQ		**813700**	SD7V16
1.4 i 16V	E	1390	AUA	ES	10/99 ▸ 09/01	6N0820803A			**699515**	SD7B10
1.4 i, 1.4 i 16V	E	1390	AFK, AHW, AK/P AUAB/D	ES	10/99 ▸ 09/01	6N0820803B	**699303**		**•699803**	SD6V12
1.4 i, 1.4 i 16V	E	1390	ANW, AUD	ES	10/99 ▸ 09/01	1J0820803K	**•813400**		**813700**	DCS17
1.6 i	E	1595	AEH, APF	ES	10/99 ▸ 09/01	1J0820803K	**813200** ⊃MQ		**813700**	SD7V16
1.6 i	E	1595	AEH, APF	ES	10/99 ▸ 09/01	1J0820803K	**•813400**		**813700**	DCS17
1.6 i 16V	E	1598	ARC	ES	11/99 ▸ 04/00	6N0820803B	**699303**		**•699803**	SD6V12
1.8 i	E	1781	ADD	ES	03/00 ▸ 09/01	1J0820803K	**813200** ⊃MQ		**813700**	SD7V16
1.8 i	E	1781	ADD	ES	03/00 ▸ 09/01	1J0820803K	**•813400**		**813700**	DCS17
2.0 i	E	1984	ADC	ES	06/00 ▸ 09/01	1J0820803K	**813200** ⊃MQ		**813700**	SD7V16
2.0 i	E	1984	ADC	ES	06/00 ▸ 09/01	1J0820803K	**•813400**		**813700**	DCS17
1.4 TDi	D	1422	AMF	ES	10/99 ▸ 09/01	6N0820803B	**699303**		**•699803**	SD6V12
1.7 SDI	D	1716	AKU	ES	10/99 ▸ 04/00	6N0820803A			**699515**	SD7B10
1.9 D, 1.9 SDI	D	1896	AEF, AGD	ES	10/99 ▸ 09/01	6N0820803A			**699515**	SD7B10
1.9 SDI, 1.9 TDi	D	1896	AGP, AGR, ALH AQM, ASV	ES	10/99 ▸ 09/01	1J0820803K	**813200** ⊃MQ		**813700**	SD7V16
1.9 SDi, 1.9 TDi	D	1896	ALH, AGP, AQM ASV, AGR	ES	10/99 ▸ 09/01	1J0820803K	**•813400**		**813700**	DCS17
POLO (2001>2004)										
1.0 i	E	999	ARA	ES	03/03 ▸ 09/03	6Q0820803J	**699383**		**•699883**	6SEU12C
1.4 FSI 16V	E	1390	AXU	ES	02/02 ▸ 05/05	6Q0820803J	**699383**		**•699883**	6SEU12C
1.4 16V, 1.4 i 16V	E	1390	AUA, AUB, BBY BBZ, BKY	ES	11/01 ▸ 05/05	6Q0820803J	**699383**		**•699883**	6SEU12C
1.6 i	E	1595	BPA	ES	10/04 ▸ 05/05	6Q0820803J	**699383**		**•699883**	6SEU12C
1.6 i	E	1598	BAH	ES	09/02 ▸ 05/05	6Q0820803J	**699383**		**•699883**	6SEU12C
2.0 i	E	1984	BBX	ES	06/03 ▸ 05/05	6Q0820803J	**699383**		**•699883**	6SEU12C
1.4 TDi	D	1422	AMF, BAY	ES	11/01 ▸ 05/05	6Q0820803J	**699383**		**•699883**	6SEU12C
1.9 SDI, 1.9 TDi	D	1896	ASY, ASZ, ATD AXR, BLT	ES	11/01 ▸ 05/05	6Q0820803J	**699383**		**•699883**	6SEU12C

		cc				OE NEW	Valeo NEW	OE ES	Valeo ES	
VOLKSWAGEN (.../...)										
POLO (2005>)										
1.2 i, 1.2 i 12V	E	1198	BMD, BME	ES	04/05 ▸	6Q0820803J	**699383**		•**699883**	6SEU12C
1.4 i 16V, 1.4 FSI 16V	E	1390	AXU, BBZ, BKY	ES	04/05 ▸	6Q0820803J	**699383**		•**699883**	6SEU12C
1.6 i 16V	E	1598	BTS	ES	05/06 ▸	6Q0820808D	**699383**		•**699883**	6SEU12C
1.8 GTi Turbo 16V	E	1781	BBU, BJX	ES	04/05 ▸	6Q0820803J	**699383**		•**699883**	6SEU12C
1.4 TDi	D	1422	BNM, BNV	ES	04/05 ▸	6Q0820803J	**699383**		•**699883**	6SEU12C
1.9 SDI, 1.9 TDi 1.9 TDi 16V	D	1896	ASY, ASZ, ATD AXR, BLT, BMT	ES	04/05 ▸	6Q0820803J	**699383**		•**699883**	6SEU12C
SHARAN (95>2000)										
1.8 i Turbo 20V 7M-Y-025 001 ▸	E	1781	AJH	ES	10/99 ▸ 02/00	7M3820803A	**813200** ⊃MQ		**813700**	SD7V16
1.8 i Turbo 20V 7M-Y-025 001 ▸	E	1781	AJH	ES	10/99 ▸ 02/00	7M3820803A	•**813400**		**813700**	DCS17
2.0 i 7H-X-000002 ▸	E	1984	ADY	ES	05/98 ▸ 02/00	7M0820803P	**699115** ⊃MQ		**699615**	SD7V16
1.9 TDi	D	1896	1Z, AFN, AHU, AVG	ES	09/95 ▸ 02/00	7M0820803P	**699115** ⊃MQ		**699615**	SD7V16
1.9 TDi	D	1896	ANU	ES	03/99 ▸ 02/00	7M3820803A	**813200** ⊃MQ		**813700**	SD7V16
1.9 TDi	D	1896	ANU	ES	03/99 ▸ 02/00	7M3820803A	•**813400**		**813700**	DCS17
SHARAN (2000>2003)										
1.8 i Turbo	E	1781	AWC	ES	04/00 ▸ 05/03	7M3820803A	**813200** ⊃MQ		**813700**	SD7V16
1.8 i Turbo	E	1781	AWC	ES	04/00 ▸ 05/03	7M3820803A	•**813400**		**813700**	DCS17
2.0 i	E	1984	ATM	ES	04/00 ▸ 05/03	7M3820803A	**813200** ⊃MQ		**813700**	SD7V16
2.0 i	E	1984	ATM	ES	04/00 ▸ 05/03	7M3820803A	•**813400**		**813700**	DCS17
2.8 i V6, 2.8 i VR6	E	2792	AYL	ES	04/00 ▸ 05/03	7M3820803A	**813200** ⊃MQ		**813700**	SD7V16
2.8 i V6, 2.8 i VR6	E	2792	AYL	ES	04/00 ▸ 05/03	7M3820803A	•**813400**		**813700**	DCS17
1.9 TDi	D	1896	ANU, ASZ, AUY	ES	04/00 ▸ 05/03	7M3820803A	**813200** ⊃MQ		**813700**	SD7V16
1.9 TDi	D	1896	ASZ, AUY, ANU	ES	04/00 ▸ 05/03	7M3820803A	•**813400**		**813700**	DCS17
SHARAN (2003>)										
1.8 i Turbo 20V	E	1781	AWC	ES	06/03 ▸	7M3820803A	**813200** ⊃MQ		**813700**	SD7V16
1.8 i Turbo 20V	E	1781	AWC	ES	06/03 ▸	7M3820803A	•**813400**		**813700**	DCS17
2.0 i	E	1984	ATM	ES	06/03 ▸	7M3820803A	**813200** ⊃MQ		**813700**	SD7V16
2.0 i	E	1984	ATM	ES	06/03 ▸	7M3820803A	•**813400**		**813700**	DCS17
2.8 i VR6	E	2792	AYL	ES	06/03 ▸	7M3820803A	**813200** ⊃MQ		**813700**	SD7V16
2.8 i VR6	E	2792	AYL	ES	06/03 ▸	7M3820803A	•**813400**		**813700**	DCS17
1.9 TDi	D	1896	ANU, ASZ, AUY BTB, BVK	ES	06/03 ▸	7M3820803A	**813200** ⊃MQ		**813700**	SD7V16
1.9 TDi	D	1896	BVK, AUY, BTB ANU, ASZ	ES	06/03 ▸	7M3820803A	•**813400**		**813700**	DCS17
2.0 TDI 16V	D	1968	BRT, BVH	ES	11/05 ▸	7M3820803A	**813200** ⊃MQ		**813700**	SD7V16
2.0 TDI 16V	D	1968	BVH, BRT	ES	11/05 ▸	7M3820803A	•**813400**		**813700**	DCS17
SCIROCCO (2008>)										
1.4 TSI 16V	E	1390	CAVD	ES	08/08 ▸	1K0820803N	**699357**	1K0820859M	**699857**	DCS17E
1.4 TSI 16V	E	1390	CAVD	ES	08/08 ▸	1K0820859T		8J0260805	•**813838**	6SEU14C
2.0 TFSI 16V	E	1984	CAWB	ES	08/08 ▸	1K0820803N	**699357**	1K0820859M	**699857**	DCS17E

You must replace the receiver drier with the compressor
Vous devez remplacer la bouteille déshydratante avec le compresseur
Tauschen Sie den Trockner mit dem Kompressor
Es obligatorio cambiar el Filtro Deshidratante con el Compresor
Tem de substituir o filtro desidratante com o compressor
E' necessario cambiare il filtro disidratatore con il compressore
U moet de filterdroger samen met de compressor vervangen
Musisz wymienić filtr osuszacz przy wymianie sprę arki
Рекомендируем замену осушителя вместо с компрессором
Při výměně kompresoru je nutné vyměnit také vysoušeč
Nu untați sa schimbați uscatorul cu compresorul
Kompresörle birlikte nem alıcıyı da değiştirin
Πρέπει να αντικαταστήσετε το φίλτρο υγρού μαζί με το συμπιεστή

		cc				OE NEW	Valeo NEW	OE ES	Valeo ES	
VOLKSWAGEN (.../...)										
SCIROCCO (2008>) (.../...)										
2.0 TFSI 16V	E	1984	CAWB	ES	08/08 ▸	1K0820859P		8J0260805	•**813838**	6SEU14C
TIGUAN										
1.4 TSi 16V	E	1390	BWK	ES	11/07 ▸	1K0820803N	**699357**	1K0820859M	**699857**	DCS17E
1.4 TSi 16V	E	1390	BWK	ES	11/07 ▸	1K0820859T		8J0260805	•**813838**	6SEU14C
2.0 TSi 16V	E	1984	CAWA,CAWB	ES	11/07 ▸	1K0820859M	**699357**	1K0820803Q	**699857**	DCS17E
2.0 TSi 16V	E	1984	CAWA,CAWB	ES	11/07 ▸	1K0820859P		8J0260805	•**813838**	6SEU14C
2.0 TDI 16V	D	1968	CBA/F, CBB/F		11/07 ▸	1K0820803S	**699357**			PXE16
2.0 TDi 16V	D	1968	CBA/F, CBB/F		11/07 ▸	1K0820859F	**699357**			PXE16
2.0 TDi 16V	D	1968	CBAA/F,CBAB/F CBBA/F,CBBB/F	ES	11/07 ▸	1K0820859M	**699357**	1K0820859F	**699857**	DCS17E
2.0 TDi 16V	D	1968	CBAA/F,CBAB/F CBBA/F,CBBB/F	ES	11/07 ▸ 05/11	5N0820803		8J0260805	•**813838**	6SEU14C
TOURAN (2003>2006)										
1.4 TSi 16V	E	1390	BMY	ES	02/06 ▸ 11/06	1K0820859M	**699357**	1K0820803Q	**699857**	DCS17E
1.6 i	E	1595	BGU		07/03 ▸ 05/05	1K0820803N	**699357**			DCS17E
1.6 i	E	1595	BGU,BSE,BSF	ES	07/03 ▸ 11/06	1K0820859M	**699357**	1K0820803Q	**699857**	DCS17E
1.6 FSI 16V	E	1598	BAG, BLF, BLP		02/03 ▸	1K0820803P	**699357**			DCS17E
1.6 FSi 16V	E	1598	BAG,BLF,BLP	ES	02/03 ▸	1K0820859M	**699357**	1K0820859C	**699857**	DCS17E
2.0 i	F	1984	BSX	ES	02/06 ▸ 11/06	1K0820859M	**699357**	1K0820803Q	**699857**	DCS17E
2.0 FSI 16V	E	1984	AXW, BLR, BLX BLY		10/03 ▸	1K0820803N	**699357**			DCS17E
2.0 FSi 16V	E	1984	AXW,BLR,BLX,BLY BVY,BVZ	ES	10/03 ▸	1K0820859M	**699357**	1K0820803Q	**699857**	DCS17E
1.9 TDI	D	1896	AVQ, BKC, BRU		02/03 ▸	1K0820803Q	**699357**			DCS17E
1.9 TDi	D	1896	AVQ,BKC,BLS,BRU BXE,BXF,BXJ	ES	02/03 ▸	1K0820803Q	**699357**	1K0820803S	**699857**	DCS17E
1.9 TDi	D	1896	AVQ,BKC,BLS,BRU BXE,BXF,BXJ	ES	02/03 ▸	1K0820859M	**699357**	1K0820803S	**699857**	DCS17E
2.0 TDI 16V	D	1968	AZV, BKD, BMM BMN		02/03 ▸	1K0820803Q	**699357**			DCS17E
2.0 TDi,2.0 TDi 16V	D	1968	AZV,BKD,BMM/F,BMN	ES	02/03 ▸	1K0820859M	**699357**	1K0820859F	**699857**	DCS17E
2.0 TDi,2.0 TDi 16V	D	1968	AZV,BKD,BMM/F,BMN	ES	02/03 ▸	1K0820803Q	**699357**	1K0820803S	**699857**	DCS17E
TOURAN (2006>)										
1.4 TSi	E	1390	BLG,BMY	ES	11/06 ▸	1K0820859M	**699357**	1K0820859C	**699857**	DCS17E
1.6 i	E	1595	BSE, BSF		11/06 ▸	1K0820859D	**699357**			DCS17E
1.6 i	E	1595	BSE,BSF	ES	11/06 ▸	1K0820859M	**699357**	1K0820859D	**699857**	DCS17E
1.6 FSi	E	1598	BLF	ES	11/06 ▸	1K0820859M	**699357**	1K0820803Q	**699857**	DCS17E
1.9 TDi	D	1896	BLS, BXE, BXF BXJ		11/06 ▸	1K0820803S	**699357**			PXE16
1.9 TDi	D	1896	BLS,BXE,BXF,BXJ	ES	11/06 ▸	1K0820803Q	**699357**	1K0820803S	**699857**	DCS17E
1.9 TDi	D	1896	BLS,BLS/F,BXE,BXF BXJ	ES	11/06 ▸	1K0820859M	**699357**	1K0820859F	**699857**	DCS17E
2.0 TDi	D	1968	AZV, BKD, BMM BMN		11/06 ▸	1K0820803S	**699357**			PXE16
2.0 TDi	D	1968	AZV,BKD,BMM/F,BMN	ES	11/06 ▸	1K0820803Q	**699357**	1K0820803S	**699857**	DCS17E
2.0 TDi	D	1968	AZV,BKD,BMM/F,BMN	ES	11/06 ▸	1K0820859M	**699357**	1K0820803S	**699857**	DCS17E
2.0 i	F	1984	BSX	ES	11/06 ▸	1K0820859M	**699357**	1K0820803Q	**699857**	DCS17E
2.0 FSi	E	1984	BVY,BVZ	ES	11/06 ▸ 01/07	1K0820859M	**699357**	1K0820803Q	**699857**	DCS17E
TOUAREG (2002>)										
2.5 TDi 7L3-012-001 ▸	D	2460	BAC,BLK,BPD,BPE	ES	01/03 ▸	7H0820805C		7H0820805E	•**813829**	7SEU
5.0 TDi V10 7L-5-060 001 ▸	D	4921	AYH,BLE	ES	11/02 ▸	7H0820805E		7H0820805E	•**813829**	7SEU

• **New** Nouveau **Neu** Nuevo **Novo** Nuovo **Nieuw** Nowi **Новый** Novy **Nou** Yeni **Νέους**

MQ : **Valeo Matching Quality** Valeo gleichwertige Qualität **Valeo Calidad Equivalente**
Część Valeo o Jakości Porównywalnej z Oryginałem

Use technical code cross-list for precise selection page 648
Utiliser les pages Cross-List (page 648) pour identifier la bonne référence
Verwenden Sie die Code-Vergleichsliste zur gezielten Suche des adäquaten Bauteils, Seite 648
Utilizar la lista de códigos cruzados para una selección precisa, página 648
Utilizzare la crosslist dei codici tecnici per una scelta precisa, pag. 648
Gebruik de lijst met verwijzingen naar de technische 648 voor de juiste keuze, op pagina 648
U yj listy kodów technicznych Valeo na stronie 648 dla precyzyjnego doboru
A se folosi paginile crosslist ca sa identifiati referita corecta
Χρησιμοποιήστε την λίστα αντιστοιχίων κωδικών για να κάνετε σωστή και ακριβή επιλογή, σελίδα 648

		CC				OE NEW	Valeo NEW	OE ES	Valeo ES	
VOLKSWAGEN (.../...)										
VENTO										
1.6 i	E	1598	ABU, AEA, AEK	ES	07/92 ▸ 12/95	1H0820803D	**699115** MQ		**699615**	SD7V16
1.8 i	E	1781	AAM, ABS, ADZ	ES	07/92 ▸ 12/97	1H0820803D	**699115** MQ		**699615**	SD7V16
2.0 E 1HP000001 ▸	E	1984	2E, ADY	ES	07/92 ▸ 04/96	1H0820803D	**699115** MQ		**699615**	SD7V16
2.8 i, 2.8 i VR6	E	2792	AAA	ES	07/92 ▸ 12/97	357820803R	**699013** MQ		**699513**	SD7V16
1.9 TD, 1.9 TDi	D	1896	1Z, AAZ, AFN	ES	07/92 ▸ 12/97	1H0820803D	**699115** MQ		**699615**	SD7V16
1.9 TDi	D	1896	AFN	ES	04/96 ▸ 12/97			1H0820803J	**699698**	V5
VOLKSWAGEN										
CADDY (95>2004)										
1.4 i	E	1390	AEX, AKV, APQ	ES	11/95 ▸ 06/03	1H0820803D	**699115** MQ		**699615**	SD7V16
1.4 i, 1.4 i 16V	E	1390	AUA, AUD	ES	09/00 ▸ 06/03	1J0820803K	**813200** MQ		**813700**	SD7V16
1.4 i, 1.4 i 16V	E	1390	AUD	ES	09/00 ▸ 06/03	1J0820803K	•**813400**		**813700**	DCS17
1.6 i	E	1595	1F	ES	11/95 ▸ 05/97	1H0820803D	**699115** MQ		**699615**	SD7V16
1.6 i	E	1598	AEE	ES	06/96 ▸ 12/00	1H0820803D	**699115** MQ		**699615**	SD7V16
1.7 SDI	D	1716	AHB	ES	07/96 ▸ 09/00	1H0820803D	**699115** MQ		**699615**	SD7V16
1.9 D, 1.9 SDI, 1.9 TDi	D	1896	1Y, AEF, AEY, AHU ALE	ES	11/95 ▸ 06/03	1H0820803D	**699115** MQ		**699615**	SD7V16
1.9 SDI, 1.9 TDi	D	1896	ALH, AYQ	ES	09/00 ▸ 06/03	1J0820803K	**813200** MQ		**813700**	SD7V16
1.9 SDi, 1.9 TDi	D	1896	ALH	ES	09/00 ▸ 06/03	1J0820803K	•**813400**		**813700**	DCS17
CADDY (2004>)										
1.4 i 16V	E	1390	BCA		02/04 ▸	1K0820803P	**699357**			DCS17E
1.4 i 16V	E	1390	BCA,BUD	ES	02/04 ▸	1K0820859M	**699357**	1K0820803F	**699857**	DCS17E
1.6 i	E	1595	BGU,BSE,BSF	ES	04/04 ▸	1K0820859M	**699357**	1K0820803N	**699857**	DCS17E
1.6 i	E	1595	BGU, BSE, BSF		04/04 ▸	1K0820803N	**699357**			DCS17E
2.0 i CNG	F	1984	BSX	ES	04/06 ▸	1K0820859M	**699357**	1K0820803F	**699857**	DCS17E
1.9 TDi	D	1896	BJB, BLS, BSU		02/04 ▸	1K0820859M	**699357**			DCS17E
1.9 TDi	D	1896	BJB,BLS,BSU	ES	02/04 ▸	1K0820803Q	**699357**	1K0820803S	**699857**	DCS17E
2.0 SDI	D	1968	BDJ, BST		02/04 ▸	1K0820803Q	**699357**			DCS17E
2.0 SDi	D	1968	BDJ,BST	ES	02/04 ▸	1K0820803Q	**699357**	1K0820803S	**699857**	DCS17E
1.9 TDi	D	1896	BJB,BLS,BSU	ES	02/04 ▸	1K0820859M	**699357**	1K0820803S	**699857**	DCS17E
2.0 SDi ▸ 2K-8-090 000	D	1968	BDJ,BST	ES	02/04 ▸	1K0820859M	**699357**	1K0820859F	**699857**	DCS17E
LT II (96>2003)										
2.5 SDI, 2.5TD, 2.5 TDI	D	2460	AGX, AHD, ANJ APA, AVR, BBE/F	ES	05/96 ▸ 05/03	2D0820805B	**699193**		**699693**	SD7H15
2.5 SDI, 2.5TD, 2.5 TDI	D	2460	AGX, AHD, ANJ APA, AVR, BBE/F	ES	05/96 ▸ 05/03	7D0820805H	**699161** MQ		**699661**	SD7V16
2.8 TD, 2.8 TDI	D	2798	AGK, ATA, AUH BCQ	ES	07/96 ▸ 05/03	2D0820805D	**699193**		**699693**	SD7H15
2.8 TD, 2.8 TDI	D	2798	AGK, ATA, AUH BCQ	ES	07/96 ▸ 05/03	7D0820805H	**699161** MQ		**699661**	SD7V16

You must replace the receiver drier with the compressor
Vous devez remplacer la bouteille déshydratante avec le compresseur
Tauschen Sie den Trockner mit dem Kompressor
Es obligatorio cambiar el Filtro Deshidratante con el Compresor
Tem de substituir o filtro desidratante com o compressor
E' necessario cambiare il filtro disidratatore con il compressore
U moet de filterdroger samen met de compressor vervangen

Musisz wymienić filtr osuszacz przy wymianie sprę arki
Рекомендируем замену осушителя вместо с компрессором
Při výměně kompresoru je nutné vyměnit také vysoušeč
Nu uitați sa schimbați uscatorul cu compresorul
Kompresörle birlikte nem alıcıyı da değiştirin
Πρέπει να αντικαταστήσετε το φίλτρο υγρού μαζί με το συμπιεστή

		cc				OE NEW	Valeo NEW	OE ES	Valeo ES	
VOLKSWAGEN (.../...)										
LT III (2003>)										
2.5 TDi	D	2460	ANJ, AVR, BBE/F	ES	06/03 ▸	2D0820805B	**699193**		**699693**	SD7H15
2.5 TDi	D	2460	ANJ, AVR, BBE/F	ES	06/03 ▸	7D0820805H	**699161** ⊃MQ		**699661**	SD7V16
2.8 TDi	D	2799	AUH, BCQ	ES	06/03 ▸	2D0820805D	**699193**		**699693**	SD7H15
2.8 TDi	D	2799	AUH, BCQ	ES	06/03 ▸	7D0820805H	**699161** ⊃MQ		**699661**	SD7V16
TRANSPORTER (F70) (90>96)										
2.0 70-N-120 001 ▸	E	1968	AAC	ES	05/92 ▸ 12/95	701820807A			**699512**	SD7V16
2.5 i	E	2460	AAF, ACU	ES	01/94 ▸ 05/96	701820805Q			**699652**	SD7V16
2.5, 2.5 i	E	2460	AAF, ACU	ES	10/91 ▸ 12/95	701820807A			**699512**	SD7V16
2.4 D 70-N-120 001 ▸	D	2370	AAB	ES	10/91 ▸ 05/96	701820807A			**699512**	SD7V16
2.5 TDi 70-T-200 001 ▸ 70-T-240 000	D	2460	ACV	ES	01/96 ▸ 04/96	701820805Q			**699652**	SD7V16
2.5 TDi	D	2460	ACV	ES	01/96 ▸ 04/96	701820807A			**699512**	SD7V16
TRANSPORTER (F7D) (96>2003)										
2.5 i	E	2460	AET, AEU	ES	05/97 ▸ 06/03	701820805	**699193**		**699693**	SD7H15
2.5 i 70-X-105 001 ▸	E	2460	AET, AEU, APL AVT	ES	06/97 ▸ 06/03	7D0820805H	**699161** ⊃MQ		**699661**	SD7V16
2.8 i VR6 ▸ 70X310000	E	2792	AES	ES	01/96 ▸ 06/03	7D0820805E			**699512**	SD7V16
2.4 D ▸ 70-T-240 000	D	2370	AAB	ES	01/96 ▸ 05/97	701820805Q			**699652**	SD7V16
2.4 D	D	2370	AJA	ES	05/97 ▸ 06/03	701820805	**699193**		**699693**	SD7H15
2.4 D	D	2370	AAB, AJA	ES	05/96 ▸ 06/03	7D0820805H	**699161** ⊃MQ		**699661**	SD7V16
2.5 TDi	D	2460	ACV, AUF, AXL AYC	ES	05/96 ▸ 06/03	2D0820805B	**699193**		**699693**	SD7H15
2.5 TDi	D	2460	ACU/V, AET/U, AHY AUF, AVT, AXL AYC	ES	05/96 ▸ 06/03	7D0820805H	**699161** ⊃MQ		**699661**	SD7V16
2.5 TDi	D	2500	AJT, AYY	ES	05/97 ▸ 06/03	2D0820805D	**699193**		**699693**	SD7H15
2.5 TDi	D	2500	AJT, AXG, AYY	ES	05/98 ▸ 06/03	7D0820805H	**699161** ⊃MQ		**699661**	SD7V16
TRANSPORTER (7J/7H)(2003>2009)										
2.5 TDI 7H-7-000 001 ▸	D	2460	AXD,AXE,BLJ,BNZ BPC	ES	04/03 ▸	7H0820805H		7H0820805E	•**813829**	7SEU
VOLVO										
440-460-480										
1.6	E	1596	B16F	ES	01/94 ▸ 06/97	3485087			**699641**	SD7V16
1.7 i Turbo	E	1721	B18FT, B18FTM	ES	01/94 ▸ 06/95	3485087			**699641**	SD7V16
1.7, 1.7 i Turbo	E	1721	B18ED, B18EP B18F, B18FP B18FT, B18FTM	ES	01/94 ▸ 07/95	3485087			**699641**	SD7V16
1.8 i	E	1794	B18U, B18U-200	ES	01/94 ▸ 06/97	3485087			**699641**	SD7V16
2.0, 2.0 i	E	1998	B20F	ES	01/94 ▸ 06/97	3485087			**699641**	SD7V16
1.9 TD	D	1870	D19T, D19TEGR	ES	07/94 ▸ 06/97	3485087			**699641**	SD7V16
740-760-780										
2.8	E	2849	B280E, B280EC B280F, B280FC	ES	07/85 ▸ 01/90	35131465			**699714**	SD709

• **New** Nouveau **Neu** Nuevo **Novo** Nuovo **Nieuw** Nowi **Новый** Novy **Nou** Yeni **Νέους**

⊃MQ : **Valeo Matching Quality** Valeo gleichwertige Qualität **Valeo Calidad Equivalente**
Część Valeo o Jakości Porównywalnej z Oryginałem

Use technical code cross-list for precise selection page 648
Utiliser les pages Cross-List (page 648) pour identifier la bonne référence
Verwenden Sie die Code-Vergleichsliste zur gezielten Suche des adäquaten Bauteils, Seite 648
Utilizar la lista de códigos cruzados para una selección precisa, página 648
Utilizzare la crosslist dei codici tecnici per una scelta precisa, pag. 648
Gebruik de lijst met verwijzingen naar de technische 648 voor de juiste keuze, op pagina 648
U yj listy kodów technicznych Valeo na stronie 648 dla precyzyjnego doboru
A se folosi paginile crosslist ca sa identifiati referita corecta
Χρησιμοποιήστε την λίστα αντιστοιχίων κωδικών για να κάνετε σωστή και ακριβή επιλογή, σελίδα 648

		CC				OE NEW	Valeo NEW	OE ES	Valeo ES	
VOLVO (.../...)										
740-760-780 (.../...)										
2.8 V6	E	2849	B280EC, B280F	ES	07/87 ▸ 07/91	35131465			**699714**	SD709
850										
2.0 10V, 2.0 20V 2.0 Turbo 20V	E	1984	B5202F, B5204F B5204T	ES	06/91 ▸ 12/96	91660456			**699753**	DKS15CH
2.3 20V, 2.3 Turbo 2.3 Turbo 20V	E	2318	B5234S, B5234T B5234T5	ES	03/93 ▸ 12/96	91660456			**699753**	DKS15CH
2.5 10V, 2.5 20V 2.5 i Turbo	E	2435	B5252F, B5254F B5254T	ES	06/91 ▸ 12/96	91660456			**699753**	DKS15CH
2.5 TDi	D	2461	D5252T	ES	02/96 ▸ 12/96	9171345			**699753**	DKS15CH
940-960										
2.8 i	E	2849	B280E, B280F	ES	09/90 ▸ 08/91	35131465			**699714**	SD709
3.0 24V	E	2922	B6304F, B6304G	ES	09/90 ▸ 12/92	35131465			**699714**	SD709
C30										
2.4 i 20V	E	2435	B5244S4		10/06 ▸	36000570	**•813323**			DKS15D
2.4 i 20V	E	2521	B5254T3,B5254T7		10/06 ▸ 01/11	36000570	**•813323**			DKS15D
1.6 D Turbo 16V	D	1560	D4164T		10/06 ▸ 04/10	36000570	**•813323**			DKS15D
2.0 D Turbo 16V	D	1998	D4204T		10/06 ▸ 03/10	36000570	**•813323**			DKS15D
2.4 TDi 20V	D	2401	D5244T8,D5244T9		10/06 ▸ 12/10	36000570	**•813323**			DKS15D
S40 (95>2004)										
1.9 TD, 1.9 TDCi, 1.9 TDi ▸ 528599	D	1870	D4192T, D4192T2 D4192T3, D4192T4	ES	07/96 ▸	8601957	**699166**	8601537	**699666**	SD7V16
S40 (2004>)										
2.4 i 20V	E	2435	B5244S4,B5244S5		03/04 ▸ 04/10	8602925	**•813323**			DKS15D
2.5 i 20V	E	2521	B5254T3		03/04 ▸ 04/07	8602925	**•813323**			DKS15D
V40										
1.9 TD, 1.9 TDi ▸ 528599	D	1870	D4192T, D4192T2	ES	06/96 ▸	8601957	**699166**	8601537	**699666**	SD7V16
V50										
1.6 i 16V	E	1596	B4164S3		01/05 ▸ 04/07	8602925	**•813323**			DKS15D
1.8 i Flexifuel 16V	F	1798	B4184S8		05/06 ▸ 10/09	8602925	**•813323**			DKS15D
2.0 i 16V	E	1999	B4204S3		02/06 ▸ 01/11	8602925	**•813323**			DKS15D
2.4 i 20V	E	2435	B5244S4,B5244S5		03/04 ▸ 04/10	8602925	**•813323**			DKS15D
2.5 i 20V	E	2521	B5254T3		03/04 ▸ 12/05	8602925	**•813323**			DKS15D
2.4 D5 20V	D	2401	D5244T8,D5244T9		02/06 ▸ 04/10	8602925	**•813323**			DKS15D
S60										
2.0 i Turbo 20V	E	1984	B5204T5		08/00 ▸	8602359	**699264**			DKS17D
2.0 i Turbo 20V	E	1984	B5204T5		08/00 ▸ 12/01		**699262**	8602621		DKS17CH
2.3 i Turbo 20V	E	2318	B5234T3		08/00 ▸ 12/01		**699262**	8602621		DKS17CH
2.3 i Turbo 20V	E	2318	B5234T3		08/00 ▸		**699264**			DKS17D
2.3 i Turbo 20V	E	2319	B5234T7-E2		08/00 ▸		**699264**			DKS17D
2.3 i Turbo 20V	E	2319	B5234T7-E2		08/00 ▸ 12/01		**699262**	8602621		DKS17CH
2.4 i 20V, 2.4 i Turbo 20V	E	2435	B5244S, B5244S2 B5244T3		08/00 ▸		**699264**			DKS17D
2.4 i 20V, 2.4 i Turbo 20V	E	2435	B5244S, B5244S2 B5244T3		08/00 ▸ 12/01		**699262**	8602621		DKS17CH
2.4 D 20V	D	2401	D5244T, D5244T2		06/01 ▸ 12/01		**699262**	8602621		DKS17CH
2.4 D 20V	D	2401	D5244T, D5244T2		06/01 ▸ 03/05	8602359	**699264**			DKS17D

You must replace the receiver drier with the compressor
Vous devez remplacer la bouteille déshydratante avec le compresseur
Tauschen Sie den Trockner mit dem Kompressor
Es obligatorio cambiar el Filtro Deshidratante con el Compresor
Tem de substituir o filtro desidratante com o compressor
E' necessario cambiare il filtro disidratatore con il compressore
U moet de filterdroger samen met de compressor vervangen
Musisz wymienić filtr osuszacz przy wymianie sprę arki
Рекомендируем замену осушителя вместо с компрессором
Při výměně kompresoru je nutné vyměnit také vysoušeč
Nu untați sa schimbați uscatorul cu compresorul
Kompresörle birlikte nem alıcıyı da değiştirin
Πρέπει να αντικαταστήσετε το φίλτρο υγρού μαζί με το συμπιεστή

		cc				OE NEW	Valeo NEW	OE ES	Valeo ES	
VOLVO (.../...)										
S60 (2010>)										
2.5 Ti 250 20V	E	2521	B5254T5	ES	04/10 ▸	36001373	**813140**		**•813640**	DCS17
V60 (2010>)										
2.5 Ti 250 20V	E	2521	B5254T5	ES	04/10 ▸	36001373	**813140**		**•813640**	DCS17
C70										
2.3 i Turbo 20V	E	2316	B5234T3-240		03/97 ▸ 12/98	8601533	**699260**			DKS15CH
2.3 i Turbo 20V ▸27717	E	2316	B5234T3-240		01/99 ▸	8602620	**699261**			DKS15CH
2.4 i Turbo	E	2435	B5254T		03/97 ▸ 12/98	8601533	**699260**			DKS15CH
2.4 i Turbo ▸27717	E	2435	B5254T		01/99 ▸	8602620	**699261**			DKS15CH
S70										
2.0 i, 2.0 i 10V **2.0 i Turbo**	E	1984	B5202FS, B5204T2 B5204T3, B5204T4		12/96 ▸ 12/98	8601533	**699260**			DKS15CH
2.0 i 10V, 2.0 i Turbo	E	1984	B5202FS, B5204T3 B5204T4		01/99 ▸ 11/00	8602620	**699261**			DKS15CH
2.3 i, 2.3 i Turbo	E	2318	B5234FS, B5234T2 B5234T3, B5234T4		12/96 ▸ 12/98	8601533	**699260**			DKS15CH
2.3 i, 2.3 i Turbo	E	2318	B5234FS, B5234T3		01/99 ▸ 11/00	8602620	**699261**			DKS15CH
2.3 i Turbo	E	2319	B5234T7-E6		05/97 ▸ 12/98	8601533	**699260**			DKS15CH
2.3 i Turbo	E	2319	B5234T7-E6		01/99 ▸ 11/00	8602620	**699261**			DKS15CH
2.4 i 20V, 2.4 i Turbo 20V **2.5 i 10V, 2.5 i 20V** **2.5 i Turbo 20V**	E	2435	B5244S, B5244S2 B5244T, B5252FS B5254S, B5254T		01/99 ▸ 11/00	8602620	**699261**			DKS15CH
2.5 i 10V, 2.5 i 20V **2.5 i Turbo 20V**	E	2435	B5252FS, B5254FS B5254S, B5254T		12/96 ▸ 12/98	8601533	**699260**			DKS15CH
2.5 TDi	D	2461	D5252T		12/96 ▸ 11/00	8601533	**699260**			DKS15CH
V70 (96>99)										
2.0 i 10V, 2.0 i Turbo 20V	E	1984	B5202FS, B5204T2 B5204T3, B5204T4		05/97 ▸ 06/98	8601533	**699260**			DKS15CH
2.3 i 20V, 2.3 i Turbo 20V	E	2318	B5234FS, B5234T2 B5234T3, B5234T4 B5234T6		05/97 ▸ 06/98	8601533	**699260**			DKS15CH
2.3 i Turbo 20V	E	2319	B5234T7-E6		05/97 ▸ 06/98	8601533	**699260**			DKS15CH
2.5 i 10V, 2.5 i 20V **2.5 i Turbo 20V**	E	2435	B5252FS, B5254FS B5254T		12/96 ▸ 12/98	8601533	**699260**			DKS15CH
2.4 i 20V, 2.4 i Turbo 20V **2.5 i 10V, 2.5 i 20V** **2.5 i Turbo 20V**	E	2435	B5244S/T, B5252FS B5254FS, B5254T		01/99 ▸ 12/99	8602620	**699261**			DKS15CH
2.5 TDi 10V	D	2461	D5252T		05/97 ▸ 06/98	8601533	**699260**			DKS15CH
V70 (2000>)										
2.0 i Turbo 20V	E	1984	B5204T5		01/00 ▸	8602278	**699264**			DKS17D
2.0 i Turbo 20V	E	1984	B5204T5		01/00 ▸ 12/01		**699262**	8602621		DKS17CH
2.3 i 20V	E	2319	B5234T3-E2		01/00 ▸ 12/01		**699262**	8602621		DKS17CH
2.3 i 20V	E	2319	B5234T3-E2		01/00 ▸ 03/05	8602278	**699264**			DKS17D
2.4 i 20V	E	2401	B5244T5	ES	01/07 ▸ 04/07	36002425	**813140**		**•813640**	DCS17
2.4 i 20V 171164 ▸391484	E	2435	B5244S, B5244S2 B5244T3		01/00 ▸		**699264**			DKS17D
2.4 i 20V	E	2435	B5244S, B5244S2 B5244T3		01/00 ▸ 12/01		**699262**	8602621		DKS17CH
2.4 i 20V	G	2435	B5244SG		01/01 ▸	8602359	**699264**			DKS17D
2.4 i 20V	G	2435	B5244SG		01/01 ▸ 12/01		**699262**	8602621		DKS17CH
2.5 T 20V 171164 ▸391484	E	2521	B5254T4		01/03 ▸		**699264**			DKS17D

• **New** Nouveau **Neu** Nuevo **Novo** Nuovo **Nieuw** Nowi **Новый** Novy **Nou** Yeni **Νέους**

MQ : Valeo Matching Quality Valeo gleichwertige Qualität **Valeo Calidad Equivalente**
Część Valeo o Jakości Porównywalnej z Oryginałem

Use technical code cross-list for precise selection page 648
Utiliser les pages Cross-List (page 648) pour identifier la bonne référence
Verwenden Sie die Code-Vergleichsliste zur gezielten Suche des adäquaten Bauteils, Seite 648
Utilizar la lista de códigos cruzados para una selección precisa, página 648
Utilizzare la crosslist dei codici tecnici per una scelta precisa, pag. 648
Gebruik de lijst met verwijzingen naar de technische 648 voor de juiste keuze, op pagina 648
U yj listy kodów technicznych Valeo na stronie 648 dla precyzyjnego doboru
A se folosi paginile crosslist ca sa identifiati referita corecta
Χρησιμοποιήστε την λίστα αντιστοιχίων κωδικών για να κάνετε σωστή και ακριβή επιλογή, σελίδα 648

		cc				OE NEW	Valeo NEW	OE ES	Valeo ES	
VOLVO (.../...)										
V70 (2000>) (.../...)										
2.5 TDI 171164 ▸ 391484	D	2461	D5252T		01/00 ▸		**699264**			DKS17D
2.5 TDI	D	2461	D5252T		01/00 ▸ 12/01		**699262**	8602621		DKS17CH
V70 (2007>)										
2.5 i 20V	E	2521	B5254T6	ES	03/07 ▸	36002425	**813140**		•**813640**	DCS17
3.0	E	2953	B6304T2		08/07 ▸	36002424	**813271**			DCS17
3.2 i	E	3192	B6324S		08/07 ▸	36002424	**813271**			DCS17
2.4 TDi 20V	D	2401	D5244T4, D5244T5	ES	03/07 ▸ 04/09	36002425	**813140**		•**813640**	DCS17
S80 (98>2006)										
2.0 i, 2.0 i Turbo ▸ 197614	E	1984	B5204T3, B5204T4		06/98 ▸		**699262**	8602621		DKS17CH
2.0 i, 2.0 i Turbo 197841 ▸ 349394	E	1984	B5204T3, B5204T4 B5204T5		06/98 ▸	8602359	**699264**			DKS17D
2.4 i 197841 ▸ 349394	E	2435	B5244S, B5244S2		06/98 ▸		**699264**			DKS17D
2.4 i ▸ 197614	E	2435	B5244S, B5244S2		06/98 ▸		**699262**	8602621		DKS17CH
2.8 i ▸ 197614	E	2783	B6284T		06/98 ▸		**699262**	8602621		DKS17CH
2.8 i ▸ 197614	E	2783	B6284T		06/98 ▸	8602278	**699264**			DKS17D
2.9 i, 3.0 i ▸ 197614	E	2922	B6294S2, B6294T B6304S3		06/98 ▸		**699262**	8602621		DKS17CH
2.9 i, 3.0 i 197841 ▸ 349394	E	2922	B6294S2, B6294T B6304S3		06/98 ▸		**699264**			DKS17D
2.4 D, 2.4 D5 ▸ 197840	D	2401	D5244T, D5244T2		07/01 ▸		**699262**	8602621		DKS17CH
2.4 D, 2.4 D5 116810 ▸ 243973	D	2401	D5244T, D5244T2		10/01 ▸	8602359	**699264**			DKS17D
2.5 TDi ▸ 116810	D	2461	D5252T		06/98 ▸	8601632	**699263**			DKS15CH
2.5 TDi 116811 ▸ 243973	D	2461	D5252T		10/01 ▸	8602278	**699264**			DKS17D
2.5 TDi 116811 ▸	D	2461	D5252T		10/01 ▸		**699262**	8602621		DKS17CH
S80 (2006>)										
2.5 T 20V 46650 ▸	E	2521	B5254T6	ES	01/07 ▸	36002425	**813140**		•**813640**	DCS17
3.2	E	3192	B6324S		01/07 ▸	36002424	**813271**			DCS17
4.4 V8	E	4414			2005 ▸ 2011	31305837	**813270**			DCS17
2.4 TDi 20V	D	2401	D5244T4, D5244T5	ES	01/07 ▸	36002425	**813140**		•**813640**	DCS17
XC70 (2000>2007)										
2.4 i Turbo 20V	E	2435	B5244T4	ES	01/07 ▸ 03/07	36002425	**813140**		•**813640**	DCS17
2.5 T 20V	E	2521	B5254T2		01/00 ▸	8602278	**699264**			DKS17D
2.4 TDi 20V	D	2401	D5244T4	ES	01/07 ▸ 03/07	36002425	**813140**		•**813640**	DCS17
XC70 (2007>)										
3.0	E	2953	B6304T2		01/08 ▸	36002424	**813271**			DCS17
3.2 i	E	3192	B6324S		08/07 ▸	36002424	**813271**			DCS17
2.4 TDi 20V	D	2401	D5244T4, D5244T5	ES	03/07 ▸	36002425	**813140**		•**813640**	DCS17

You must replace the receiver drier with the compressor
Vous devez remplacer la bouteille déshydratante avec le compresseur
Tauschen Sie den Trockner mit dem Kompressor
Es obligatorio cambiar el Filtro Deshidratante con el Compresor
Tem de substituir o filtro desidratante com o compressor
E' necessario cambiare il filtro disidratatore con il compressore
U moet de filterdroger samen met de compressor vervangen
Musisz wymienić filtr osuszacz przy wymianie sprę arki
Рекомендируем замену осушителя вместо с компрессором
Při výměně kompresoru je nutné vyměnit také vysoušeč
Nu untați sa schimbați uscatorul cu compresorul
Kompresörle birlikte nem alıcıyı da değiştirin
Πρέπει να αντικαταστήσετε το φίλτρο υγρού μαζί με το συμπεστή

		cc				OE NEW	Valeo NEW	OE ES	Valeo ES	
VOLVO (.../...)										
XC90 (2002>)										
2.9 i 24V 420314 ▸	E	2922	B6294T		▸ 09/07	36002422	**813142**			DCS 17
3.2 i V6 24V 420314 ▸	E	3192	B6324S		09/06 ▸ 09/07	36002422	**813142**			DCS 17
4.4 i V8 32V 420314 ▸	E	4414	B8444S		▸ 09/07	36002423	**813141**			
4.4 V8	E	4414			2005 ▸ 2011	31305837	**813270**			DCS17
VOLVO										
FH12										
FH12.340	D	12100	D12A/C/D340		08/93 ▸	8191892	**813017**			SD7H15
FH12.340	D	12100	D12A/C/D340		08/93 ▸	3962650	**813013**			SD7H15
FH12.340	D	12100	D12A/C/D340		08/93 ▸	8142555	**813012**			SD7H15
FH12.380	D	12100	D12A/C/D380		08/93 ▸	8113628	**813017**			SD7H15
FH12.380	D	12100	D12A/C/D380		08/93 ▸	3962650	**813013**			SD7H15
FH12.380	D	12100	D12A/C/D380		08/93 ▸	8142555	**813012**			SD7H15
FH12.420	D	12100	D12A/C/D420		08/93 ▸	8191892	**813017**			SD7H15
FH12.420	D	12100	D12A/C/D420		08/93 ▸	3962650	**813013**			SD7H15
FH12.420	D	12100	D12A/C/D420		01/95 ▸	8142555	**813012**			SD7H15
FH12.460	D	12100	D12C460, D12D460		08/98 ▸	8113628	**813017**			SD7H15
FH12.460	D	12100	D12C460, D12D460		08/98 ▸	3962650	**813013**			SD7H15
FH12.500	D	12100	D12D500		09/01 ▸	8191892	**813017**			SD7H15
FH16										
FH16.470	D	16120	D16A470		08/93 ▸ 12/99	3962650	**813013**			SD7H15
FH16.520	D	16120	D16A520, D16B520		01/95 ▸	8113628	**813017**			SD7H15
FH16.520	D	16120	D16A520, D16B520		01/95 ▸	3962650	**813013**			SD7H15
FH16.520	D	16120	D16A520, D16B520		08/93 ▸ 12/02	8142555	**813012**			SD7H15
FH16.610	D	16120	D16C610		01/03 ▸	8142555	**813012**			SD7H15
FL6										
FL6.08	D	5480	TD61G/A		10/85 ▸ 12/99	1071995	**813032**			SD7H15
FL6.10	D	5480	TD61F		09/85 ▸ 11/94	1071995	**813032**			SD7H15
FL6.11	D	5480	TD63ES		09/85 ▸ 03/00	1071995	**813032**			SD7H15
FL6.12	D	5480	D6A210		09/85 ▸ 12/99	1071995	**813032**			SD7H15
FL6.14	D	5480	D6A250		09/85 ▸ 03/00	1071995	**813032**			SD7H15
FL6.15	D	5480	D6A250		11/91 ▸ 03/00	1071995	**813032**			SD7H15
FL6.18	D	5480	D6A230		11/91 ▸ 03/00	1071995	**813032**			SD7H15

• **New** Nouveau **Neu** Nuevo **Novo** Nuovo **Nieuw** Nowi **Новый** Novy **Nou** Yeni **Νέους**

VMQ : **Valeo Matching Quality** Valeo gleichwertige Qualität **Valeo Calidad Equivalente**
Część Valeo o Jakości Porównywalnej z Oryginałem

Use technical code cross-list for precise selection page 648
Utiliser les pages Cross-List (page 648) pour identifier la bonne référence
Verwenden Sie die Code-Vergleichsliste zur gezielten Suche des adäquaten Bauteils, Seite 648
Utilizar la lista de códigos cruzados para una selección precisa, página 648
Utilizzare la crosslist dei codici tecnici per una scelta precisa, pag. 648
Gebruik de lijst met verwijzingen naar de technische 648 voor de juiste keuze, op pagina 648
U yj listy kodów technicznych Valeo na stronie 648 dla precyzyjnego doboru
A se folosi paginile crosslist ca sa identifiati referita corecta
Χρησιμοποιήστε την λίστα αντιστοιχίων κωδικών για να κάνετε σωστή και ακριβή επιλογή, σελίδα 648

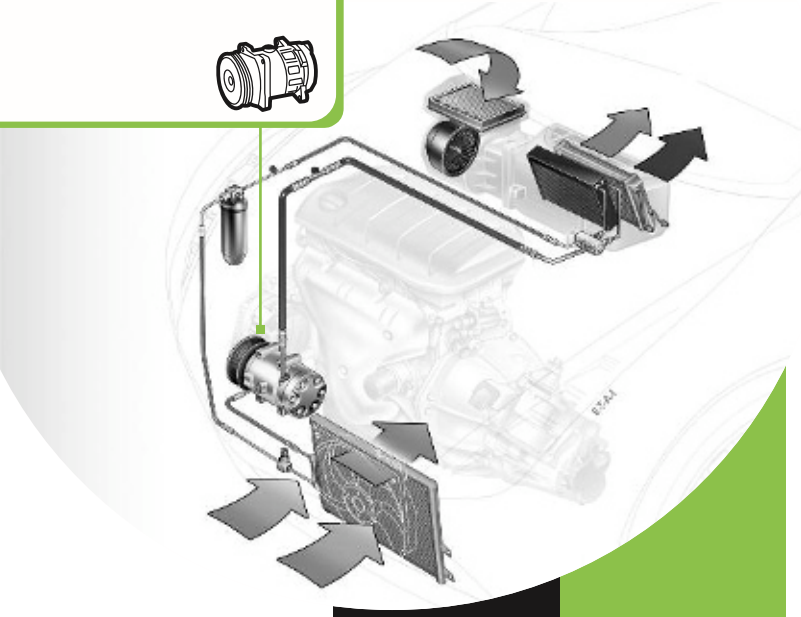

COMPRESSOR
COMPRESSEUR
KOMPRESSOR
COMPRESSOR
COMPRESOR
COMPRESSORE
COMPRESSOR
SPRĘŁARKA
Компрессор
KOMPRESOR
COMPRESOR
KOMPRESOR
Συμπιεστής

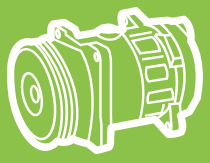

TECH.COD.

CT	Valeo NEW	
DELPHI/HARRISON		
CVC		
2392		**699752**
4152		**699895**
4749		**813600**
4751	**813101**	**813601**
4752		**813602**
4753		**813603**
4754		**813604**
5197		**699869**
7255		**699771**
9055		**813605**
1134750		**699862**
1139026	**699246**	**699746**
1139027		**699766**
1139509		**699860**
9116419		**699748**
9132918		**699898**
9165714	**699270**	**699770**
9167048		**699748**
9174395		**699749**
9174396	**699250**	**699750**
9174397	**699251**	**699751**
24427685	**699393**	**699893**
2J551-45010		**813834**
V5		
015124		**699698**
7197		**813688**
700653	**813159**	
1131554	**699073**	**699573**
1131558	**699070**	**699570**
1131664	**699075**	**699575**
1131665		**699568**
1131737		**699695**
1131739		**699574**
1131769	**699073**	**699573**
1131773		**699695**
1131907	**699073**	**699573**
1131909	**699071**	**699571**

CT	Valeo NEW	
DELPHI/HARRISON		
V5		
1135008	**699070**	**699570**
1135017		**699909**
1135019		**699566**
1135025	**699072** MQ	**699572**
1135046		**699574**
1135047		**699695**
1135048	**699073**	**699573**
1135049		**699909**
1135088	**699075**	**699575**
1135095	**699076**	
1135106	**699077**	**699577**
1135201		**699735**
1135240	**699102** MQ	**699602**
1135273		**699735**
1135284	**699157**	**699657**
1135289	**699197**	**699697**
1135290	**699155**	**699655**
1135294		**699743**
1135295	**699072** MQ	**699572**
1135296	**699391**	
1135302	**699102** MQ	**699602**
1135307	**699077**	**699577**
1135309	**699143** MQ	**699643**
1135320	**699240**	**699740**
1135321	**699241**	**699741**
1135322		**699743**
1135323	**699072** MQ	**699572**
1135514		**699861**
		813705
DENSO		
10P15C		
447100-8630	**813173**	
10PA15C		
047200-2920		**699688**
147100-897		**699552**
147200-2230		**699671**

You must replace the receiver drier with the compressor
Vous devez remplacer la bouteille déshydratante avec le compresseur
Tauschen Sie den Trockner mit dem Kompressor
Es obligatorio cambiar el Filtro Deshidratante con el Compresor
Tem de substituir o filtro desidratante com o compressor
E' necessario cambiare il filtro disidratatore con il compressore
U moet de filterdroger samen met de compressor vervangen

Musisz wymienić filtr osuszacz przy wymianie sprę arki
Рекомендируем замену осушителя вместо с компрессором
Při výměně kompresoru je nutné vyměnit také vysoušeč
Nu untați sa schimbați uscatorul cu compresorul
Kompresörle birlikte nem alıcıyı da değiştirin
Πρέπει να αντικαταστήσετε το φίλτρο υγρού μαζί με το συμπιεστή

Valeo

CT	Valeo NEW	
DENSO		
10PA15C		
447100-2190		**699569**
447200-1591		**813842**
10PA17C		
047200-7212	**699296**	
047200-8543		**699604**
147200-1881		**699624**
447100-2060	**699105**	**699605**
447100-2070	**699105**	**699605**
447100-228		**699653**
447100-5540		**699650**
447170-3770	**699051**	**699551**
447170-3780	**699148**	**699648**
447170-3860	**699322**	**699822**
447200-4202		**813831**
5SL12C		
447170-8950	**699373**	
447170-8960	**699374**	
447190-2151	**813197**	
6CA17C		
447100-2480	**699299**	
447100-3360		**699745**
6SEU12C		
447190-4360	**699383**	**699883**
447190-8680	**699381**	
447190-9360	**699300**	**699800**
447170-7932	**813190**	**813690**
447170-7943		**813836**
447170-7923		**813837**
6SEU14C		
447190-6680	**813150**	**813650**
447190-6682		**813835**
447150-1930		**813838**
6SEU16C		
447190-7690	**813196**	
7SB16C		
447100-7143		**699902**

CT	Valeo NEW	
DENSO		
7SB16C		
447100-9510		**699767**
447100-9512		**699767**
447100-9513		**699767**
447100-9514		**699767**
447170-7552		**699769**
447170-8640		**699896**
447170-8642		**699896**
447200-8010		**699768**
447200-8011		**699768**
447200-8012		**699768**
447200-9568		**699768**
447200-9569		**699768**
447200-9702		**699767**
447200-9703		**699767**
447220-8590		**699896**
447170-5651/447220-8050		**813832**
7SBU16C		
447100-5730	**699298** ⊃MQ	**699798**
447100-6820	**699298** ⊃MQ	**699798**
447100-7680	**699298** ⊃MQ	**699798**
447100-8650	**699301**	
447100-9440	**699275** ⊃MQ	**699775**
447170-6290	**699275** ⊃MQ	**699775**
447170-8651		**699897**
447170-8652		**699897**
447170-8660	**699324**	**699824**
447170-9230	**699320**	
447170-9240	**699323**	**699823**
447170-9250	**699321**	
447190-4310	**813166**	
447190-5670	**699275** ⊃MQ	**699775**
447220-8600		**699897**
447190- 9273	**699376** ⊃MQ	**699876**
447180-3131/447220-8027		**813833**
7SEU16C		
447180-5350	**699380**	**699880**
447190-9440	**813151**	

⊃MQ : **Valeo Matching Quality** Valeo gleichwertige Qualität **Valeo Calidad Equivalente**
Część Valeo o Jakości Porównywalnej z Oryginałem

Valeo

CT	Valeo NEW	
DENSO		
7SEU17C		
447180-5514	**813195**	**813695**
447180-6767	**813194**	
447180-9956	**813195**	**813695**
447190-8280	**813157**	
447220-9332	**813195**	**813695**
SC08		
447100-1560	**699283**	
447170-0050	**699280**	
59247-5900	**699283**	
SCS08C		
447170-0690	**699284**	
59247-6000	**699284**	
SCSB06C		
447100-1870	**813171**	
SCSC06C		
447170-0560	**813167**	
TV12SC		
447100-0420	**699286**	
447100-0950	**699290**	
447100-0960	**699289**	
447100-1180	**699281**	
447100-1200	**699279**	
447100-1201	**699279**	
50777-2000	**699286**	
TV14EC		
447100-0020	**699287**	
447100-0030	**699288**	
SANDEN		
DCS17		
1206	**813400**	
1207	**813400**	
1215	**813400**	
1221	**813400**	
1226	**813400**	
1233	**813400**	

CT	Valeo NEW	
SANDEN		
DCS17		
1245	**813400**	
1278	**813400**	
1279	**813400**	
1283	**813400**	
PXE13		
8740	**699372**	
PXV16		
8600	**699307**	**699807**
8609	**699318**	**699818**
8612	**699317**	**699817**
8614	**699346**	
8617	**699348**	**699848**
8618	**699355**	**699855**
8620	**699317**	**699817**
8622	**699347**	
8624	**699346**	
8629	**699307**	**699807**
8631	**699348**	**699848**
8632	**699355**	**699855**
8633	**699318**	**699818**
8634	**699317**	**699817**
8635	**699346**	
8676	**813174**	
8680	**813174**	
8681	**813174**	
SD5H14		
6627	**815878**	
6628	**815879**	
6632	**815882**	
6642	**815883**	
4509, 6626	**815877**	
4513, 6631	**815881**	
4514, 6629	**815880**	
4536, 6630	**815891**	
4537, 6634	**815892**	
SD6C12		
1332		**813726**

You must replace the receiver drier with the compressor
Vous devez remplacer la bouteille déshydratante avec le compresseur
Tauschen Sie den Trockner mit dem Kompressor
Es obligatorio cambiar el Filtro Deshidratante con el Compresor
Tem de substituir o filtro desidratante com o compressor
E' necessario cambiare il filtro disidratatore con il compressore
U moet de filterdroger samen met de compressor vervangen

Musisz wymienić filtr osuszacz przy wymianie sprę arki
Рекомендируем замену осушителя вместо с компрессором
Při výměně kompresoru je nutné vyměnit také vysoušeč
Nu untaţi sa schimbaţi uscatorul cu compresorul
Kompresörle birlikte nem alıcıyı da değiştirin
Πρέπει να αντικαταστήσετε το φίλτρο υγρού μαζί με το συμπιεστή

Valeo

CT	Valeo NEW	
SANDEN		
SD6C12		
1350	**813164**	**813664**
1355	**813223**	**813723**
1363/1364		**813749**
SD6V10		
1512		**699867**
SD6V12		
1410	**699303**	**699803**
1412	**699190** ⊃MQ	**699690**
1414		**699899**
1415	**699202**	
1416	**699218**	**699718**
1417	**699191**	**699691**
1418	**699308**	**699808**
1421	**699216**	**699716**
1422	**699239**	**699739**
1423	**699405**	**699905**
1427	**699234**	**699734**
1428	**699405**	**699905**
1429	**699306**	**699806**
1431	**699237** ⊃MQ	**699737**
1434	**699311**	
1437	**699358**	**699858**
1438	**813189** ⊃MQ	**813689**
1440	**699308**	**699808**
1441		**699870**
1444	**699359**	**699859**
1446	**813132**	**813632**
1447		**699912**
1450		**813809**
1452	**813131**	**813631**
1454	**699303**	**699803**
1900	**813165**	**813665**
SD709		
7422		**699608**
7433		**699635**
7439		**699581**
7450		**699599**

CT	Valeo NEW	
SANDEN		
SD709		
7468		**699597**
7524		**699612**
7532		**699506**
7728		**699618**
SD7B10		
7150	**699212**	
7158	**699015**	**699515**
7170	**699212**	
SD7C16		
1300	**699351**	
1301	**699352**	
1302	**699353**	
1304	**699349**	
1305		**813713**
1308	**813161**	
1309	**813162**	**813662**
1312		**813715**
1315		**813716**
1316		**813717**
1317		**813718**
1318	**813163**	**813663**
1330	**813161**	
1333		**813725**
1334		**813721**
SD7H13		
7300		**699522**
SD7H15		
4636	**699310**	
7805	**699101**	
7806	**699114**	
7815	**699003**	
7820	**699193**	**699693**
7829	**699147**	
7830	**815872**	
7834	**813012**	
7841	**699145**	

⊃MQ : **Valeo Matching Quality** Valeo gleichwertige Qualität **Valeo Calidad Equivalente**
Część Valeo o Jakości Porównywalnej z Oryginałem

Valeo

CT	Valeo NEW	
SANDEN		
SD7H15		
7854	**699020**	**699520**
7857		**699543**
7858		**699660**
7861		**699589**
7870	**699023**	**699523**
7872	**815876**	
7882		**813808**
7908	**699028**	**699528**
7911	**699079**	**699579**
7971		**699596**
7977	**699145**	
7980	**699366**	
7981	**813016**	
7983	**699345**	
8003	**813013**	
8010	**699088**	**699588**
8044	**813017**	
8051	**813019**	
8067	**699366**	
8068	**813016**	
8073	**699079**	**699579**
8074	**699088**	**699588**
8075	**699092**	**699592**
8078	**699057**	**699557**
8081	**813023**	
8085	**815948**	
8095	**813007**	
8117	**813014**	
8127	**813019**	
8131	**813025**	
8157	**813022**	
8176	**813017**	
8182	**813019**	
4643, 7849	**815873**	
4710, 7850	**815874**	
7851, 8019	**815871**	
7862, 8023, 8227	**815863**	

CT	Valeo NEW	
SANDEN		
SD7H15		
7863, 8024, 8220	**815864**	
7866, 8017, 8239	**815868**	
7871, 8015	**815875**	
7889, 8027	**815947**	
7890, 8028, 8230	**815867**	
8086, 8240	**815870**	
SD7V12		
1433		**813814**
1449		**813824**
1500	**699026**	**699526**
1502	**699026**	**699526**
1907		**813818**
SD7V12		
1908	**813317**	**813817**
SD7V16		
1010	**699109**	**699609**
1011	**699220**	**699720**
1015		**699641**
1016	**699220**	**699720**
1060	**813198**	
1069		**813827**
1100	**699115** MQ	**699615**
1102	**699013** MQ	**699513**
1105	**699016**	**699516**
1106	**699236** MQ	**699736**
1111		**699507**
1116	**699025**	**699525**
1118	**699152**	**699652**
1120	**699174**	**699674**
1132	**699045**	**699545**
1133	**699093**	**699593**
1134	**699036**	**699536**
1135	**699039**	**699539**
1137	**699115** MQ	**699615**
1142	**699166**	**699666**
1143	**699094**	**699594**
1148	**699144**	**699644**

You must replace the receiver drier with the compressor
Vous devez remplacer la bouteille déshydratante avec le compresseur
Tauschen Sie den Trockner mit dem Kompressor
Es obligatorio cambiar el Filtro Deshidratante con el Compresor
Tem de substituir o filtro desidratante com o compressor
E' necessario cambiare il filtro disidratatore con il compressore
U moet de filterdroger samen met de compressor vervangen

Musisz wymienić filtr osuszacz przy wymianie sprę arki
Рекомендируем замену осушителя вместо с компрессором
Při výměně kompresoru je nutné vyměnit také vysoušeč
Nu untați sa schimbați uscatorul cu compresorul
Kompresörle birlikte nem alıcıyı da değiştirin
Πρέπει να αντικαταστήσετε το φίλτρο υγρού μαζί με το συμπιεστή

Valeo

CT	Valeo NEW	
SANDEN		
SD7V16		
1149	**699221**	**699721**
1150	**699107**	**699607**
1152	**699059**	**699559**
1157	**699175**	**699675**
1158	**699201**	**699701**
1160	**699305**	
1162	**699115** ⊃MQ	**699615**
1164	**699305**	
1167	**699012**	**699512**
1173	**699045**	**699545**
1174	**699175**	**699675**
1175	**699094**	**699594**
1176	**699414**	**699914**
1177	**699414**	**699914**
1188	**813129**	**813629**
1206	**813200** ⊃MQ	**813700**
1207	**699161** ⊃MQ	**699661**
1209	**699106**	**699606**
1211	**699199**	**699699**
1214	**699012**	**699512**
1215	**813200** ⊃MQ	**813700**
1219	**699314**	
1220	**699315**	
1226	**813200** ⊃MQ	**813700**
1227	**699236** ⊃MQ	**699736**
1233	**813200** ⊃MQ	**813700**
1237		**813805**
1238		**813806**
1240	**699272** ⊃MQ	**699772**
1241		**813807**
1242	**813158**	
1243		**813804**
1245	**813200** ⊃MQ	**813700**
1246	**699161** ⊃MQ	**699661**
1248	**813202**	
1249	**813203**	
1254	**699368**	**699868**

CT	Valeo NEW	
SANDEN		
SD7V16		
1255	**813202**	
SD7V16		
1259		**813810**
SD7V16		
1270		**813811**
1276		**813813**
1287	**813203**	
1802		**813820**
1803	**813322**	
1804		**813821**
TRS090		
3064	**699313**	
3654	**813168**	
4959	**699313**	
TRS105		
3211	**699316**	
TRSA09		
3650	**699312**	
TRV090		
3500	**699078**	
SELTEC		
FITTING		
122-05440	**815920**	
122-05441	**815924**	
122-05442	**815921**	
122-05444	**815923**	
122-05446	**815922**	
TM13		
435-52120	**815813**	
435-52141	**815821**	
435-54010	**815815**	
435-54012	**815822**	
435-54014	**815814**	
435-54038	**815806**	

⊃MQ : **Valeo Matching Quality** Valeo gleichwertige Qualität **Valeo Calidad Equivalente**
Część Valeo o Jakości Porównywalnej z Oryginałem

Valeo

CT	Valeo NEW
SELTEC	
TM13	
435-54041	**815810**
435-54070	**815851**
435-54120	**815816**
435-54122	**815852**
435-54210	**815900**
435-54212	**815903**
435-54222	**815823**
435-54234	**815906**
435-54236	**815909**
TM14-15	
435-55210	**815901**
435-55212	**815904**
435-55234	**815907**
435-55236	**815910**
TM15	
435-55011	**815800**
435-55017	**815802**
435-55021	**815803**
435-55030	**815824**
435-55036	**815825**
435-55038	**815826**
435-55041	**815827**
435-55045	**815828**
435-55050	**815829**
435-55061	**815830**
435-55065	**815831**
435-55073	**815832**
435-55120	**815807**
435-55121	**815804**
435-55122	**815818**
435-55123	**815833**
435-55125	**815834**
435-55131	**815835**
435-55204	**815836**
435-55220	**815837**
488-25021	**815801**
TM16	
435-56011	**815808**

CT	Valeo NEW
SELTEC	
TM16	
435-56017	**815848**
435-56018	**815849**
435-56021	**815838**
435-56023	**815839**
435-56028	**815840**
435-56029	**815841**
435-56041	**815842**
435-56045	**815843**
435-56050	**815844**
435-56120	**815809**
435-56122	**815845**
435-56123	**815850**
435-56125	**815811**
435-56204	**815846**
435-56210	**815902**
435-56212	**815905**
435-56234	**815908**
435-56236	**815911**
435-56241	**815847**
VC31	
488-46510	**815860**
488-46530	**815858**
488-46550	**815859**

VALEO		
C6990130	**699013** MQ	**699513**
C699047K	**699047** MQ	**699547**
C699048J	**699048** MQ	**699548**
C699119C	**699119** MQ	**699619**
C699120B	**699120** MQ	**699620**
C699127L	**699127** MQ	**699627**
C699128F	**699128** MQ	**699628**
C699161P	**699161** MQ	**699661**
C699209A	**699209** MQ	
C699237Y	**699237** MQ	**699737**
C699275T	**699275** MQ	**699775**

You must replace the receiver drier with the compressor
Vous devez remplacer la bouteille déshydratante avec le compresseur
Tauschen Sie den Trockner mit dem Kompressor
Es obligatorio cambiar el Filtro Deshidratante con el Compresor
Tem de substituir o filtro desidratante com o compressor
E' necessario cambiare il filtro disidratatore con il compressore
U moet de filterdroger samen met de compressor vervangen

Musisz wymienić filtr osuszacz przy wymianie sprę arki
Рекомендируем замену осушителя вместо с компрессором
Při výměně kompresoru je nutné vyměnit také vysoušeč
Nu untați sa schimbați uscatorul cu compresorul
Kompresörle birlikte nem alıcıyı da değiştirin
Πρέπει να αντικαταστήσετε το φίλτρο υγρού μαζί με το συμπιεστή

Valeo

CT	Valeo NEW	
VALEO		
C699327H	**699327** ⊃MQ	**699827**
C699330D	**699330** ⊃MQ	**699830**
C699337E	**699337** ⊃MQ	**699837**
C699356Q	**813189** ⊃MQ	**813689**
C813200R	**813200** ⊃MQ	**813700**
F699102Z	**699102** ⊃MQ	**699602**
F699115S	**699115** ⊃MQ	**699615**
F699143U	**699143** ⊃MQ	**699643**
F699236A	**699236** ⊃MQ	**699736**
F699272T	**699272** ⊃MQ	**699772**
F699298F	**699298** ⊃MQ	**699798**
VALEO/ZEXEL		
DCS14		
Z0004086	**813268**	
DCS17		
Z0002280	**813271**	
Z0002812	**813270**	
Z0003904	**813261**	
Z0004218	**813260**	
Z0005143	**813259**	
Z0005307	**813262**	
Z0005702A	**813140**	**813640**
Z0006203	**813263**	**813763**
Z0006615	**813258**	
Z0006688	**813264**	**813764**
Z0006836	**813255**	
Z0008192	**813257**	
Z0008944	**813265**	
Z0012052	**813269**	**813769**
Z0012439A	**813381**	
Z0012593A	**813383**	
Z0012607A	**813382**	
Z0017502A	**813384**	
DCS17E		
Z0005773A	**813137**	
Z0006495A	**813137**	

CT	Valeo NEW	
VALEO/ZEXEL		
DCS17E		
Z0006496A	**813157**	
506041-0270	**699357**	
DCS17EC		
506041-0262	**699405**	**699905**
506041-0422	**699405**	**699905**
DCS17IC		
506041-0065	**813121**	
506041-0076	**813122**	
506041-0085	**813123**	
506041-0381	**813124**	
DCS17REC		
506041-0530	**813125**	**813625**
DCW17D		
506031-0821		**699728**
506031-0831		**699727**
506031-0841		**699729**
506031-0851		**699730**
506031-0881		**699725**
506031-0901	**699222**	**699722**
506031-0911		**699731**
DKS15CH		
506011-6725	**699259**	
506011-6744	**699253**	**699753**
506011-8272	**699260**	
506011-8501	**699263**	
506011-8834F	**699261**	
DKS15D		
C209073M	**813323**	
DKS17CH		
506011-8207	**699262**	
506012-0330		**699894**
506012-0331	**813108**	
506012-0340		**699895**
506012-0341	**813109**	
506012-0390	**813110**	

⊃MQ : **Valeo Matching Quality** Valeo gleichwertige Qualität **Valeo Calidad Equivalente**
Część Valeo o Jakości Porównywalnej z Oryginałem

Valeo

CT	Valeo NEW	
VALEO/ZEXEL		
DKS17D		
506012-01821F	**699264**	
506012-1771		**699897**
506012-2251	**813111**	
Z0010612A	**813339**	
DKV06R		
506021-7332F	**699393**	**699893**
506021-7372F	**699392**	
DKV08R		
506021-7430	**813113**	
Z0004246	**813343**	
DKV11		
5060214884	**813267**	
Z0011175	**813256**	
DKV11D		
506021-3780		**699904**
DKV11G		
506021-5422	**813115**	
506021-7410	**813117**	
DKV14		
5060216423	**813266**	
DKV14D		
506021-2920		**699903**
VISTEON		
FS10		
10-160-01003		**699840**
10-160-01007		**813606**
10-160-01028	**699205**	
10-160-01029	**699335**	
SCROLL		
10-160-01027	**699336**	**699836**
TRV10		
10-160-01001	**699326**	**699826**
10-160-01025	**699328**	**699828**
10-160-01008	**699119** ⊃MQ	**699619**

CT	Valeo NEW	
VISTEON		
10-160-01011	**699209** ⊃MQ	
10-160-01012	**699209** ⊃MQ	
10-160-01013	**699127** ⊃MQ	**699627**
10-160-01014	**699209** ⊃MQ	
10-160-01015	**699047** ⊃MQ	**699547**
10-160-01016	**699128** ⊃MQ	**699628**
10-160-01017	**699048** ⊃MQ	**699548**
10-160-01018	**699330** ⊃MQ	**699830**
10-160-01020	**699337** ⊃MQ	**699837**
10-160-01021	**699327** ⊃MQ	**699827**
10-160-01022	**699120** ⊃MQ	**699620**

You must replace the receiver drier with the compressor
Vous devez remplacer la bouteille déshydratante avec le compresseur
Tauschen Sie den Trockner mit dem Kompressor
Es obligatorio cambiar el Filtro Deshidratante con el Compresor
Tem de substituir o filtro desidratante com o compressor
E' necessario cambiare il filtro disidratatore con il compressore
U moet de filterdroger samen met de compressor vervangen

Musisz wymienić filtr osuszacz przy wymianie sprę arki
Рекомендируем замену осушителя вместо с компрессором
Při výměně kompresoru je nutné vyměnit také vysoušeč
Nu untaţi sa schimbaţi uscatorul cu compresorul
Kompresörle birlikte nem alıcıyı da değiştirin
Πρέπει να αντικαταστήσετε το φίλτρο υγρού μαζί με το συμπιεστή

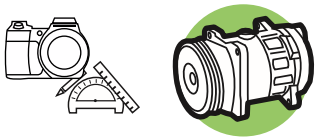

Valeo

		TECH	
	Valeo NEW	Connect/Fitting Rotalock V	Espace II, R21, R25
	Valeo ES 699501	TYPE PV-4	
	OE 7700863108 7700856259	Ø(mm) 115	
	SANDEN	12 V	
	TYPE SD709	TYPE MIN>PAG100	
	CODE 7718, 7899	QTY(CC) 135	
		Valeo 699936	
	Valeo NEW	Connect/Fitting Flange H	Safrane
	Valeo ES 699502	TYPE PV-4	
	OE 7700852705	Ø(mm) 148	
	SANDEN	12 V	
	TYPE SD709	TYPE MIN>PAG100	
	CODE 7500, 7857	QTY(CC) 135	
		Valeo 699936	
	Valeo NEW 699003	Connect/Fitting Flange V	Clio, Espace III, Laguna
	Valeo ES	TYPE PV-6	
	OE 7700859676	Ø(mm) 119	
	SANDEN	12 V	
	TYPE SD7H15	TYPE PAG100	
	CODE 7815	QTY(CC) 135	
		Valeo 699936	
	Valeo NEW	Connect/Fitting Flange V	R19, R21
	Valeo ES 699504	TYPE PV-6	
	OE 7701499827	Ø(mm) 119	
	SANDEN	12 V	
	TYPE SD709	TYPE MIN>PAG100	
	CODE 7442	QTY(CC) 135	
		Valeo 699936	
	Valeo NEW	Connect/Fitting Rotalock V	Espace II, R25
	Valeo ES 699505	TYPE AM2	
	OE 7701499807	Ø(mm) 110	
	SANDEN	12 V	
	TYPE SD709	TYPE MIN>PAG100	
	CODE 7549	QTY(CC) 135	
		Valeo 699936	

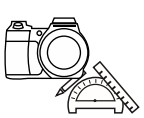

		TECH	

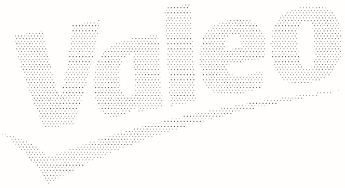	Valeo NEW Valeo ES **699506** OE 7700260894 7701499806 SANDEN **TYPE** SD709 **CODE** **7532**	**Connect/Fitting** **TYPE** PV-6 Ø(mm) 149 12 V **TYPE** MIN>PAG100 **QTY**(CC) 135 Valeo **699936**	Safrane ⓘ+
	Valeo NEW Valeo ES **699507** OE 60602694 SANDEN **TYPE** SD7V16 **CODE** **1111**	**Connect/Fitting** Flange V **TYPE** PV-5 Ø(mm) 134 12 V **TYPE** PAG46 **QTY**(CC) 135 Valeo **699935**	155 ⓘ+
	Valeo NEW Valeo ES **699512** OE 701820807A SANDEN **TYPE** SD7H15 **CODE** **1167**	**Connect/Fitting** Flange H **TYPE** PV-6 Ø(mm) 125 12 V **TYPE** PAG100 **QTY**(CC) 135 Valeo **699936**	Transporter (F70), Transporter (F7D) ⓘ+
	Valeo NEW **699013** Valeo ES **699513** OE 357820803R SANDEN **TYPE** SD7V16 **CODE** **1102, 1163**	**Connect/Fitting** Flange H **TYPE** PV-7 Ø(mm) 120 12 V **TYPE** PAG46 **QTY**(CC) 135 Valeo **699935**	Corrado, Golf III, Passat, Vento ⓘ+ Valeo Matching Quality
	Valeo NEW Valeo ES **699514** OE 357820803C SANDEN **TYPE** SD709 **CODE** **7423**	**Connect/Fitting** O-Ring H **TYPE** AM2 Ø(mm) 130 12 V **TYPE** MIN>PAG100 **QTY**(CC) 175 Valeo **699936**	Corrado, Golf II, Jetta II, Passat ⓘ+

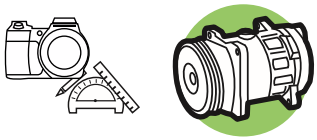

Valeo

		TECH	
	Valeo NEW	Connect/Fitting Flange H	Arosa, Felicia, Polo
	Valeo ES 699515	TYPE PV-6	
	OE 6N0820803A	Ø(mm) 104	
	SANDEN	12 V	
	TYPE SD7B10	TYPE PAG46	
	CODE 7158	QTY(CC) 100	
		Valeo 699935	
	Valeo NEW	Connect/Fitting Flange H	Passat
	Valeo ES 699516	TYPE PV-6	
	OE 357820803Q	Ø(mm) 119,5	
	SANDEN	12 V	
	TYPE SD7V16	TYPE PAG46	
	CODE 1105	QTY(CC) 135	
		Valeo 699935	
	Valeo NEW	Connect/Fitting O-Ring H	Corrado, Golf II, Passat
	Valeo ES 699517	TYPE PV-4	
	OE 357820803A	Ø(mm) 120	
	SANDEN	12 V	
	TYPE SD709	TYPE MIN>PAG100	
	CODE 7425	QTY(CC) 135	
		Valeo 699936	
	Valeo NEW	Connect/Fitting Flange H	BX, 405, 605
	Valeo ES 699518	TYPE PV-5	
	OE 6453H6 6453FZ	Ø(mm) 120	
	SANDEN	12 V	
	TYPE SD709	TYPE MIN>PAG100	
	CODE 7705	QTY(CC) 135	
		Valeo 699936	
	Valeo NEW	Connect/Fitting Flange H	Jumper, Relay, Xantia 405, 605, Boxer Ducato
	Valeo ES 699520	TYPE PV-6	
	OE 6453P9 6453GE	Ø(mm) 120	
	SANDEN	12 V	
	TYPE SD7H15	TYPE PAG100	
	CODE 7854	QTY(CC) 135	9614674380
		Valeo 699936	

Valeo

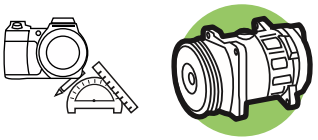

		TECH	
Valeo NEW		Connect/Fitting	Flange V
Valeo ES	699522	TYPE	PV-5
OE	6453GN 6453GN	Ø(mm)	119
	SANDEN		12 V
TYPE	SD7H13	TYPE	PAG100
CODE	7300	QTY(CC)	135
		Valeo	699936

AX, Berlingo,
ZX, 306, Partner

Valeo NEW		Connect/Fitting	Flange H
Valeo ES	699523	TYPE	PV-5
OE	6453P5 6453GK	Ø(mm)	119
	SANDEN		12 V
TYPE	SD7H15	TYPE	PAG100
CODE	7870	QTY(CC)	135
		Valeo	699936

XM,
205, 605

Valeo NEW		Connect/Fitting	Rotalock H
Valeo ES	699524	TYPE	PV-6
OE	6453K4 6453GG	Ø(mm)	119
	SANDEN		12 V
TYPE	SD709	TYPE	MIN>PAG100
CODE	7709	QTY(CC)	135
		Valeo	699936

405

Valeo NEW		Connect/Fitting	Flange H
Valeo ES	699525	TYPE	PV-6
OE	6453Q2 6453GJ	Ø(mm)	118
	SANDEN		12 V
TYPE	SD7V16	TYPE	PAG46
CODE	1116	QTY(CC)	135
		Valeo	699935

XM,
605

Valeo NEW		Connect/Fitting	Flange V
Valeo ES	699526	TYPE	PV-5
OE	6453N1 6453GC	Ø(mm)	123
	SANDEN		12 V
TYPE	SD7V12	TYPE	PAG46
CODE	1500, 1502	QTY(CC)	135
		Valeo	699935

Berlingo, Saxo, Xsara
106, 306, Partner

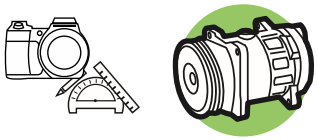

Valeo

		TECH	
	Valeo NEW	Connect/Fitting Rotalock H	Jumper,
	Valeo ES 699528	TYPE PV-6	Boxer
	OE 6453T0 6453GQ	Ø(mm) 119	
	SANDEN	12 V	
	TYPE SD7H15	TYPE PAG100	
	CODE 7908	QTY(CC) 135	
		Valeo 699936	
	Valeo NEW	Connect/Fitting Flange V	Clio
	Valeo ES 699533	TYPE PV-4	
	OE 7701499856	Ø(mm) 135	
	SANDEN	12 V	
	TYPE SD709	TYPE MIN>PAG100	
	CODE 7497, 7539 7726	QTY(CC) 135	
		Valeo 699936	
	Valeo NEW	Connect/Fitting Flange H	Safrane
	Valeo ES 699534	TYPE PV-6	
	OE 7700856241 7700865583	Ø(mm) 135,5	
	SANDEN	12 V	
	TYPE SD709	TYPE MIN>PAG100	
	CODE 7605	QTY(CC) 135	
		Valeo 699936	
	Valeo NEW 699036	Connect/Fitting Flange H	Mégane
	Valeo ES 699536	TYPE PV-4	
	OE 7700866491 7701499852	Ø(mm) 125	
	SANDEN	12 V	
	TYPE SD7V16	TYPE PAG46	
	CODE 1134	QTY(CC) 135	
		Valeo 699935	
	Valeo NEW	Connect/Fitting Flange V	Twingo
	Valeo ES 699537	TYPE PV-6	
	OE 7700860997 7701499837	Ø(mm) 126	
	SANDEN	12 V	
	TYPE SD7H15	TYPE PAG100	
	CODE 7827	QTY(CC) 135	
		Valeo 699936	

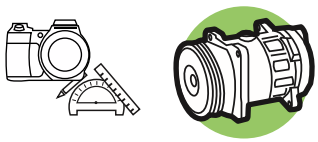

		TECH	
Valeo NEW		Connect/Fitting	Flange V
Valeo ES	699538	TYPE	PV-4
OE	7701499811	Ø(mm)	119
	SANDEN		12 V
TYPE	SD7H15	TYPE	PAG100
CODE	7916	QTY(CC)	135
		Valeo	699936

Clio

Valeo NEW	699039	Connect/Fitting	Flange V
Valeo ES	699539	TYPE	PV-4
OE	7700272497 7701499819	Ø(mm)	120
	SANDEN		12 V
TYPE	SD7V16	TYPE	PAG46
CODE	1135	QTY(CC)	135
		Valeo	699935

Clio, Lutecia (Jap)

Valeo NEW		Connect/Fitting	Flange V 45°
Valeo ES	699540	TYPE	PV-6
OE	7701499835	Ø(mm)	128
	SANDEN		12 V
TYPE	SD7H15	TYPE	PAG100
CODE	7823	QTY(CC)	135
		Valeo	699936

Laguna

Valeo NEW		Connect/Fitting	Flange H
Valeo ES	699543	TYPE	PV-4
OE	7700871663 7700865150	Ø(mm)	148
	SANDEN		12 V
TYPE	SD7H15	TYPE	PAG100
CODE	7857	QTY(CC)	135
		Valeo	699936

Safrane

Valeo NEW	699045	Connect/Fitting	Flange H
Valeo ES	699545	TYPE	PV-6
OE	7700866828 7701499844	Ø(mm)	119
	SANDEN		12 V
TYPE	SD7V16	TYPE	PAG46
CODE	1132, 1173 1184	QTY(CC)	135
		Valeo	699935

Mégane, Mégane Scénic

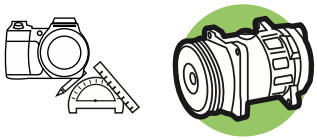

Valeo

		TECH	
	Valeo NEW Valeo ES 699546 OE 64528385714 64528385714 SEIKO SEIKI TYPE SS96D1 CODE	Connect/Fitting Flange Top TYPE PV-4 Ø(mm) 115 12 V TYPE PAG100 QTY(CC) 90 Valeo 699936	3 E36, Z3 +
	Valeo NEW 699047 Valeo ES 699547 OE 1035433 1018265 VALEO TYPE FS10 CODE 10-160-01015	Connect/Fitting Flange H TYPE PV-6 Ø(mm) 127 12 V TYPE PAG46 QTY(CC) 200 Valeo 699935	Escort, Mondeo, Orion + Valeo Matching Quality
	Valeo NEW 699048 Valeo ES 699548 OE 1035432 1018496 VALEO TYPE FS10 CODE 10-160-01017	Connect/Fitting TYPE PV-5 Ø(mm) 127 12 V TYPE PAG46 QTY(CC) 200 Valeo 699935	Mondeo + Valeo Matching Quality
	Valeo NEW 699051 Valeo ES 699551 OE 64528385909 64528385915 DENSO TYPE 10PA17C CODE 447170-3770	Connect/Fitting TYPE PV-5 Ø(mm) 110 12 V TYPE PAG46 QTY(CC) 160 Valeo 699935	3 E36, 5 E34, M3 E36 +
	Valeo NEW Valeo ES 699552 OE 0031319501 DENSO TYPE 10P15C CODE 147100-897#	Connect/Fitting TYPE PV-6 Ø(mm) 119 12 V TYPE MIN>PAG100 QTY(CC) 200 Valeo 699936	190 (201), 200/300 (124) E Class (124), S Class (126) +

		TECH	
	Valeo NEW **699057** Valeo ES **699557** OE 7700112299 7701499845 SANDEN **TYPE** SD7H15 **CODE** **8078**	**Connect/Fitting** Flange V **TYPE** PV-6 Ø(mm) 120 12 V **TYPE** PAG100 **QTY**(CC) 135 Valeo **699936**	Safrane ⓘ+
	Valeo NEW **699059** Valeo ES **699559** OE 7700106069 7700106950 SANDEN **TYPE** SD7V16 **CODE** **1152**	**Connect/Fitting** Flange V **TYPE** PV-5 Ø(mm) 117 12 V **TYPE** PAG46 **QTY**(CC) 135 Valeo **699935**	Clio, Clio II, Kangoo Twingo ⓘ+
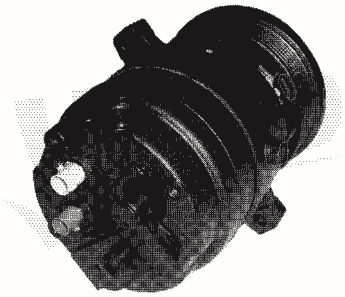	Valeo NEW Valeo ES **699566** OE 1854126 1854126 DELPHI/HARRISON **TYPE** V5 **CODE** **1135019**	**Connect/Fitting** Flange V **TYPE** PV-6 Ø(mm) 126 12 V **TYPE** PAG125 **QTY**(CC) 236 Valeo **699937**	Calibra, Vectra A ⓘ+
	Valeo NEW Valeo ES **699568** OE 7576000 DELPHI/HARRISON **TYPE** V5 **CODE** **1131665**	**Connect/Fitting** Flange H **TYPE** A-1 Ø(mm) 140 12 V **TYPE** MIN>PAG100 **QTY**(CC) 236 Valeo **699936**	Tempra, Tipo, Dedra ⓘ+
	Valeo NEW Valeo ES **699569** OE 0002301111 DENSO **TYPE** 10PA15C **CODE** **447100-2190**	**Connect/Fitting** **TYPE** PV-6 Ø(mm) 125 12 V **TYPE** MIN>PAG100 **QTY**(CC) 180 Valeo **699936**	190 (201), 200/300 (124) E Class (124), G Class S Class (126), Sprinter ⓘ+

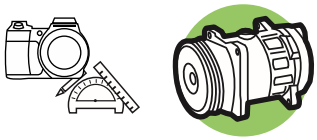

Valeo

		TECH	
	Valeo NEW **699070** Valeo ES **699570** OE 1854054 / 1854129 DELPHI/HARRISON **TYPE** V5 **CODE** 1135008 / 1131558	**Connect/Fitting** Flange H **TYPE** A-2 Ø(mm) 134 12 V **TYPE** MIN>PAG100 **QTY**(CC) 236 Valeo **699936**	Calibra, Frontera, Vectra A, Cavalier III ⓘ+
	Valeo NEW **699071** Valeo ES **699571** OE 1854008 / 1854124 DELPHI/HARRISON **TYPE** V5 **CODE** 1131909	**Connect/Fitting** Flange V **TYPE** PV-6 Ø(mm) 125 12 V **TYPE** PAG125 **QTY**(CC) 295 Valeo **699937**	Astra F, Astra G, Calibra, Vectra A, Astra III, Cavalier III ⓘ+
	Valeo NEW **699072** Valeo ES **699572** OE 1854094 / 1854141 DELPHI/HARRISON **TYPE** V5 **CODE** 1135025 / 1135323	**Connect/Fitting** Flange V **TYPE** PV-6 Ø(mm) 125 12 V **TYPE** PAG125 **QTY**(CC) 295 Valeo **699937**	Combo, Corsa B, Tigra, Combo, Corsa I ⓘ+ Valeo Matching Quality
	Valeo NEW **699073** Valeo ES **699573** OE 1854057 / 1854021 DELPHI/HARRISON **TYPE** V5 **CODE** 1131769/554 / 1131907/5048	**Connect/Fitting** Flange H **TYPE** A-1 Ø(mm) 125 12 V **TYPE** MIN>PAG100 **QTY**(CC) 265 Valeo **699936**	Omega A, Senator B ⓘ+
	Valeo NEW Valeo ES **699574** OE 1854025 DELPHI/HARRISON **TYPE** V5 **CODE** 1131739	**Connect/Fitting** **TYPE** Ø(mm) **TYPE** **QTY**(CC) Valeo	Carlton, Senator ⓘ+

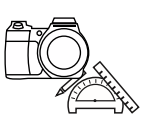

		TECH	

Valeo	Valeo NEW 699075 Valeo ES 699575 OE 7767200 DELPHI/HARRISON TYPE V5 CODE 1135088, 1131664	Connect/Fitting Flange H TYPE PV-5 Ø(mm) 124 12 V TYPE PAG125 QTY(CC) 260 Valeo 699937	Brava, Bravo, Marengo Tempra, Tipo, Uno Dedra, Delta ⓘ+
Valeo	Valeo NEW 699076 Valeo ES OE 7773398 DELPHI/HARRISON TYPE V5 CODE 1135095	Connect/Fitting Flange H TYPE A-1 Ø(mm) 140 12 V TYPE PAG125 QTY(CC) 260 Valeo 699937	Tempra, Tipo, Dedra, Delta ⓘ+
Valeo	Valeo NEW 699077 Valeo ES 699577 OE 1854145, 1854014 DELPHI/HARRISON TYPE V5 CODE 1135307, 1135106	Connect/Fitting Flange V TYPE PV-6 Ø(mm) 125 12 V TYPE PAG125 QTY(CC) 250 Valeo 699937	Omega B, Omega ⓘ+
Valeo	Valeo NEW 699078 Valeo ES OE 6926859 SANDEN TYPE TRV090 CODE 3500	Connect/Fitting TYPE PV-4 Ø(mm) 110 12 V TYPE PAG46 QTY(CC) 120 Valeo 699935	Courrier, Fiesta ⓘ+
Valeo	Valeo NEW 699079 Valeo ES 699579 OE 7700111298, 7701499839 SANDEN TYPE SD7H15 CODE 7911, 8073	Connect/Fitting Flange H TYPE PV-6 Ø(mm) 120 12 V TYPE PAG100 QTY(CC) 135 Valeo 699936	Espace III, Laguna ⓘ+

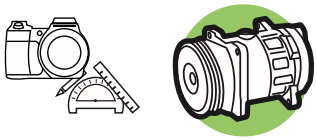

		TECH	
	Valeo NEW	Connect/Fitting Rotalock V	155, 164
	Valeo ES 699581	TYPE PV-5	
	OE 60513513	Ø(mm) 138	
	SANDEN	12 V	
	TYPE SD709	TYPE MIN>PAG100	
	CODE 7439	QTY(CC) 135	
		Valeo 699936	
	Valeo NEW 699088	Connect/Fitting Flange H	Espace III, Laguna
	Valeo ES 699588	TYPE PV-6	
	OE 7700111289 7701499862	Ø(mm) 120	
	SANDEN	12 V	
	TYPE SD7H15	TYPE PAG100	
	CODE 8010, 8074	QTY(CC) 135	
		Valeo 699936	
	Valeo NEW	Connect/Fitting	Safrane
	Valeo ES 699589	TYPE	
	OE 7700868578	Ø(mm)	
	SANDEN		
	TYPE SD7H15	TYPE	
	CODE 7861	QTY(CC)	
		Valeo	
	Valeo NEW 699092	Connect/Fitting Flange H	Laguna
	Valeo ES 699592	TYPE PV-6	
	OE 7700111036 7701499861	Ø(mm) 125	
	SANDEN	12 V	
	TYPE SD7H15	TYPE PAG100	
	CODE 8055, 8075	QTY(CC) 135	
		Valeo 699936	
	Valeo NEW 699093	Connect/Fitting Flange H	Mégane
	Valeo ES 699593	TYPE PV-6	
	OE 7700866530	Ø(mm) 112	
	SANDEN	12 V	
	TYPE SD7V16	TYPE PAG46	
	CODE 1133	QTY(CC) 135	
		Valeo 699935	

		TECH	
	Valeo NEW **699094** Valeo ES **699594** OE 7700272987 7701499820 SANDEN **TYPE** SD7V16 **CODE** **1143, 1175**	**Connect/Fitting** Flange H **TYPE** PV-4 Ø(mm) 120 12 V **TYPE** PAG46 **QTY**(CC) 135 Valeo **699935**	Mégane, Mégane Scénic
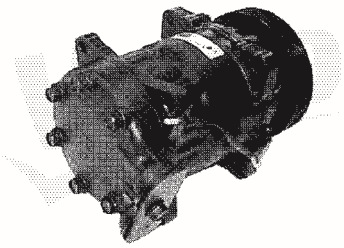	Valeo NEW Valeo ES **699596** OE 7701499857 7701499857 SANDEN **TYPE** SD7H15 **CODE** **7971**	**Connect/Fitting** **TYPE** Ø(mm) **TYPE** **QTY**(CC) Valeo	Espace III, Laguna, Safrane
	Valeo NEW Valeo ES **699597** OE 4070801 SANDEN **TYPE** SD709 **CODE** **7468, 7710**	**Connect/Fitting** Flange V **TYPE** A-2 Ø(mm) 132 12 V **TYPE** MIN>PAG100 **QTY**(CC) 135 Valeo **699936**	900, 9000
	Valeo NEW Valeo ES **699598** OE 7774059 SANDEN **TYPE** SD709 **CODE** **7412**	**Connect/Fitting** Rotalock V **TYPE** AM2 Ø(mm) 132 12 V **TYPE** MIN>PAG100 **QTY**(CC) 135 Valeo **699936**	Croma, Tempra, Tipo Thema
	Valeo NEW Valeo ES **699599** OE 4846601 SANDEN **TYPE** SD709 **CODE** **7450**	**Connect/Fitting** Rotalock H **TYPE** PV-1 Ø(mm) 108 12 V **TYPE** MIN>PAG100 **QTY**(CC) 135 Valeo **699936**	Croma, Thema

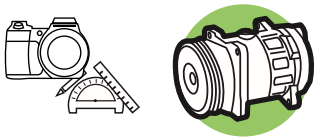

Valeo

		TECH	
	Valeo NEW **699101** Valeo ES OE 98453640 SANDEN **TYPE** SD7H15 **CODE** 7805	**Connect/Fitting** Rotalock H **TYPE** A-1 Ø(mm) 110 12 V **TYPE** PAG100 **QTY**(CC) 135 Valeo **699936**	Croma, Thema +
	Valeo NEW **699102** Valeo ES **699602** OE 1854092 1854142 DELPHI/HARRISON **TYPE** V5 **CODE** 1135240 1135302	**Connect/Fitting** Flange V **TYPE** PV-6 Ø(mm) 119 12 V **TYPE** PAG125 **QTY**(CC) 295 Valeo **699937**	Frontera, Vectra B, Vectra + Valeo Matching Quality
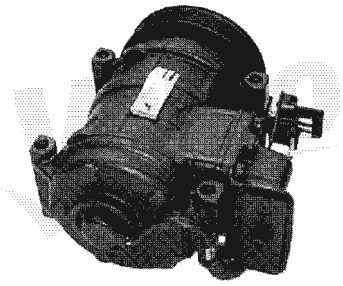	Valeo NEW Valeo ES **699604** OE 0002300511 DENSO **TYPE** 10PA17C **CODE** 047200-8543	**Connect/Fitting** **TYPE** PV-6 Ø(mm) 119 12 V **TYPE** PAG46 **QTY**(CC) 180 Valeo **699935**	200/300 (124), E Class (124), G Class +
	Valeo NEW **699105** Valeo ES **699605** OE 0002300611 1191300015 DENSO **TYPE** 10PA17C **CODE** 447100-2070	**Connect/Fitting** **TYPE** PV-6 Ø(mm) 125 12 V **TYPE** PAG46 **QTY**(CC) 140 Valeo **699935**	200/300 (124), CLK (208), E Class (124), SL (129), Sprinter, V Class (638/2), Vito +
	Valeo NEW Valeo ES **699606** OE 6453AX 7700861150 SANDEN **TYPE** SD7V16 **CODE** 1209	**Connect/Fitting** Flange V **TYPE** PV-6 Ø(mm) 120 12 V **TYPE** PAG46 **QTY**(CC) 135 Valeo **699935**	C5, C8, Xantia 406, 605, 607 Espace III, Laguna + 6453GP

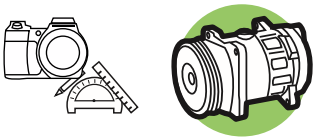

Valeo

		TECH	
Valeo NEW	699107	Connect/Fitting	Flange V 45°
Valeo ES	699607	TYPE	PV-6
OE	7700100417 7701499850	Ø(mm)	125
	SANDEN		12 V
TYPE	SD7V16	TYPE	PAG46
CODE	1150	QTY(CC)	135
		Valeo	699935

Clio II, Kangoo

Valeo NEW		Connect/Fitting	
Valeo ES	699608	TYPE	A-2
OE	4319992	Ø(mm)	
	SANDEN		12 V
TYPE	SD709	TYPE	MIN>PAG100
CODE	7422, 7734	QTY(CC)	135
		Valeo	699936

9000

Valeo NEW	699109	Connect/Fitting	Flange V
Valeo ES	699609	TYPE	PV-5
OE	JPB100760	Ø(mm)	125
	SANDEN		12 V
TYPE	SD7V16	TYPE	PAG46
CODE	1010	QTY(CC)	135
		Valeo	699935

200, 25, 400

Valeo NEW		Connect/Fitting	Flange V
Valeo ES	699611	TYPE	PV-7
OE	60604347	Ø(mm)	124
	SANDEN		12 V
TYPE	SD7H15	TYPE	PAG100
CODE	7836	QTY(CC)	135
		Valeo	699936

155

Valeo NEW	699114	Connect/Fitting	Rotalock V
Valeo ES		TYPE	PV-7
OE	60601070	Ø(mm)	120
	SANDEN		12 V
TYPE	SD7H15	TYPE	PAG100
CODE	7806	QTY(CC)	135
		Valeo	699936

164

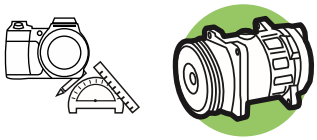

Valeo

		TECH	
	Valeo NEW **699115** Valeo ES **699615** OE 1H0820803D 1067110 SANDEN **TYPE** SD7V16 **CODE** **1100, 1162**	**Connect/Fitting** Flange H **TYPE** PV-6 Ø(mm) 119,5 12 V **TYPE** PAG46 **QTY**(CC) 135 Valeo **699935**	Galaxy, Alhambra, Cordoba, Ibiza, Inca, Toledo Caddy, Golf III, Passat Valeo Matching Quality
	Valeo NEW Valeo ES **699618** OE 7700861779 SANDEN **TYPE** SD709 **CODE** **7728**	**Connect/Fitting** **TYPE** Ø(mm) **TYPE** **QTY**(CC) Valeo	Clio, Lutecia (Jap)
	Valeo NEW **699119** Valeo ES **699619** OE 1021291 VALEO **TYPE** FS10 **CODE** **10-160-01008**	**Connect/Fitting** Flange **TYPE** PV-5 Ø(mm) 127 12 V **TYPE** PAG46 **QTY**(CC) 200 Valeo **699935**	Escort, Orion Valeo Matching Quality
	Valeo NEW **699120** Valeo ES **699620** OE 1028708 1007366 VALEO **TYPE** FS10 **CODE** **10-160-01022**	**Connect/Fitting** Flange H **TYPE** PV-6 Ø(mm) 115 12 V **TYPE** PAG46 **QTY**(CC) 200 Valeo **699935**	Galaxy, Granada, Scorpio Valeo Matching Quality
	Valeo NEW Valeo ES **699624** OE 4720743 DENSO **TYPE** 10PA17C **CODE** **147200-1881**	**Connect/Fitting** **TYPE** Ø(mm) **TYPE** **QTY**(CC) Valeo	Voyager

		TECH	
	Valeo NEW **699127** Valeo ES **699627** OE 1026282 1010211 VALEO **TYPE** FS10 **CODE** **10-160-01013**	**Connect/Fitting** **TYPE** PV-6 Ø(mm) 115 12 V **TYPE** PAG46 **QTY**(CC) 200 Valeo **699935**	Galaxy, Transit Valeo Matching Quality
	Valeo NEW **699128** Valeo ES **699628** OE 1035431 4032669 VALEO **TYPE** FS10 **CODE** **10-160-01016**	**Connect/Fitting** Flange H **TYPE** PV-6 Ø(mm) 129 12 V **TYPE** PAG46 **QTY**(CC) 200 Valeo **699935**	Cougar, Mondeo Valeo Matching Quality
	Valeo NEW Valeo ES **699635** OE ETC7994 SANDEN **TYPE** SD709 **CODE** **7433**	**Connect/Fitting** Flange H **TYPE** AM2 Ø(mm) 12 V **TYPE** MIN>PAG100 **QTY**(CC) 135 Valeo **699936**	Discovery
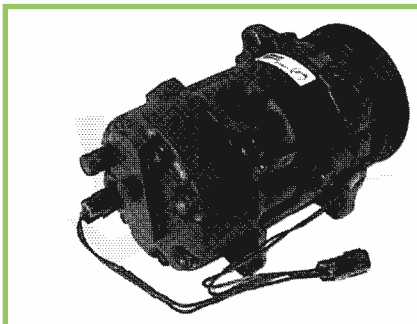	Valeo NEW Valeo ES **699641** OE 3485087 SANDEN **TYPE** SD7V16 **CODE** **1015**	**Connect/Fitting** Flange H **TYPE** PV-6/PV-4 Ø(mm) 123 12 V **TYPE** PAG46 **QTY**(CC) 135 Valeo **699935**	440-460-480
	Valeo NEW **699143** Valeo ES **699643** OE 7700105765 7701499860 DELPHI/HARRISON **TYPE** V5 **CODE** **1135309**	**Connect/Fitting** Flange H **TYPE** PV-6 Ø(mm) 123 12 V **TYPE** PAG125 **QTY**(CC) 220 Valeo **699937**	Espace III, Master, Mégane, Mégane Scénic, Trafic Valeo Matching Quality

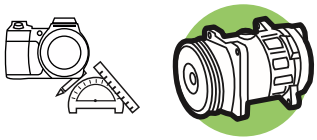

Valeo

		TECH	
	Valeo NEW **699144** Valeo ES **699644** OE 7700875357 7701499858 SANDEN **TYPE** SD7V16 **CODE** **1148**	**Connect/Fitting** Flange V 45° **TYPE** PV-4 Ø(mm) 125 12 V **TYPE** PAG46 **QTY**(CC) 135 Valeo **699935**	Clio II, Kangoo ⓘ+
	Valeo NEW **699145** Valeo ES OE 4677344 SANDEN **TYPE** SD7H15 **CODE** **7977**	**Connect/Fitting** Flange V **TYPE** PV-6 Ø(mm) 120 12 V **TYPE** PAG100 **QTY**(CC) 135 Valeo **699936**	Voyager ⓘ+
	Valeo NEW Valeo ES **699646** OE 60600702 SANDEN **TYPE** SD7H15 **CODE** **7837**	**Connect/Fitting** Rotalock V **TYPE** PV-5 Ø(mm) 132 12 V **TYPE** PAG100 **QTY**(CC) 135 Valeo **699936**	164 ⓘ+
	Valeo NEW **699147** Valeo ES OE 7746258 7746258 SANDEN **TYPE** SD7H15 **CODE** **7829**	**Connect/Fitting** Rotalock V **TYPE** A-2 Ø(mm) 144 12 V **TYPE** PAG100 **QTY**(CC) 135 Valeo **699936**	Coupe, Tempra, Tipo Dedra, Delta ⓘ+
	Valeo NEW **699148** Valeo ES **699648** OE 64528391135 ERR4375 DENSO **TYPE** 10PA17C **CODE** **447170-3780**	**Connect/Fitting** **TYPE** PV-4 Ø(mm) 125 12 V **TYPE** PAG46 **QTY**(CC) 160 Valeo **699936**	3 E36, 5 E34, Range Rover ⓘ+ 64521385172

		TECH	
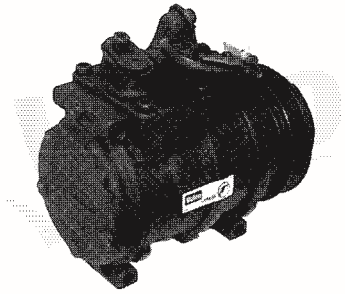	Valeo NEW Valeo ES **699650** OE 64528385917 64528385917 DENSO **TYPE** 10PA17C **CODE** **447100-5540**	**Connect/Fitting** **TYPE** PV-5 Ø(mm) 110 12 V **TYPE** PAG46 **QTY**(CC) 180 Valeo **699935**	7 E38 ⓘ+
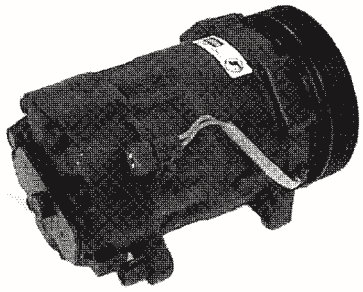	Valeo NEW Valeo ES **699652** OE 7701820805Q SANDEN **TYPE** SD7V16 **CODE** **1118**	**Connect/Fitting** Flange H **TYPE** PV-6 Ø(mm) 130 12 V **TYPE** PAG46 **QTY**(CC) 135 Valeo **699935**	Transporter (F70), Transporter (F7D) ⓘ+
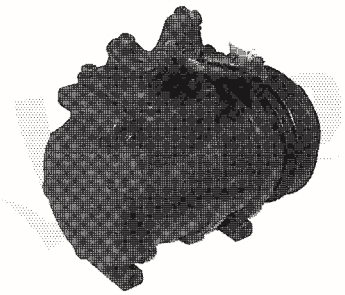	Valeo NEW Valeo ES **699653** OE 64528385908 64528385908 DENSO **TYPE** 10PA17C **CODE** **447100-228**	**Connect/Fitting** **TYPE** PV-5 Ø(mm) 115 12 V **TYPE** PAG46 **QTY**(CC) 180 Valeo **699935**	5 E34, 7 E32, 8 E31 ⓘ+
	Valeo NEW **699155** Valeo ES **699655** OE 6453AQ 6453GF DELPHI/HARRISON **TYPE** V5 **CODE** **1135290**	**Connect/Fitting** Flange H **TYPE** PV-6 Ø(mm) 120 12 V **TYPE** PAG125 **QTY**(CC) 265 Valeo **699937**	C5, Xantia,406 ⓘ+
	Valeo NEW Valeo ES **699657** OE 7700273320 7701499852 DELPHI/HARRISON **TYPE** V5 **CODE** **1135284**	**Connect/Fitting** Flange V **TYPE** PV-4 Ø(mm) 119 12 V **TYPE** PAG125 **QTY**(CC) 220 Valeo **699937**	Mégane, Mégane Scénic ⓘ+

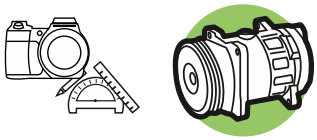

Valeo

		TECH	
	Valeo NEW	Connect/Fitting Flange H	Safrane
	Valeo ES 699659	TYPE PV-6	
	OE 7700865035	Ø(mm) 138	
	SANDEN	12 V	
	TYPE SD709	TYPE MIN>PAG100	
	CODE 7614	QTY(CC) 135	
		Valeo 699936	
	Valeo NEW	Connect/Fitting Flange V 45°	Safrane
	Valeo ES 699660	TYPE PV-6	
	OE 7700865327 7701499842	Ø(mm) 149	
	SANDEN	12 V	
	TYPE SD7H15	TYPE PAG100	
	CODE 7858	QTY(CC) 135	
		Valeo 699936	
	Valeo NEW 699161	Connect/Fitting Flange H	LT II, LT III, Transporter (F7D)
	Valeo ES 699661	TYPE PV-6	
	OE 7D0820805H	Ø(mm) 127	
	SANDEN	12 V	
	TYPE SD7V16	TYPE PAG46	
	CODE 1207, 1246 1279	QTY(CC) 135	Valeo Matching Quality
		Valeo 699935	
	Valeo NEW 699166	Connect/Fitting Flange H	S40, V40
	Valeo ES 699666	TYPE PV-6	
	OE 8601957 8601537	Ø(mm) 118	
	SANDEN	12 V	
	TYPE SD7V16	TYPE PAG46	
	CODE 1142	QTY(CC) 135	
		Valeo 699935	
	Valeo NEW	Connect/Fitting	Escort, Orion
	Valeo ES 699671	TYPE	
	OE 6573814	Ø(mm)	
	DENSO	12 V	
	TYPE 10PA15C	TYPE PAG46	
	CODE 147200-2230	QTY(CC) 200	
		Valeo 699935	

		TECH	
	Valeo NEW **699174** Valeo ES **699674** OE 60813335 SANDEN **TYPE** SD7V16 **CODE** **1120**	**Connect/Fitting** Flange V 45° **TYPE** PV-6 Ø(mm) 120 12 V **TYPE** PAG46 **QTY**(CC) 135 Valeo **699935**	147, 156, 166 Kappa, Thesis ⓘ+
	Valeo NEW **699175** Valeo ES **699675** OE 60630739 60653652 SANDEN **TYPE** SD7V16 **CODE** **1157, 1174**	**Connect/Fitting** Flange V **TYPE** PV-6 Ø(mm) 134 12 V **TYPE** PAG46 **QTY**(CC) 135 Valeo **699935**	146, 147, 156 Spider, Barchetta ⓘ+
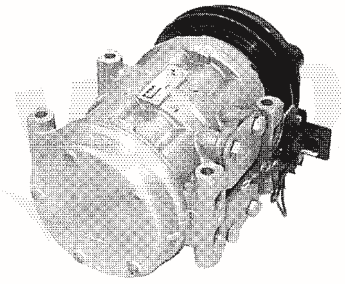	Valeo NEW Valeo ES **699688** OE 0001301115 DENSO **TYPE** 10PA15C **CODE** **047200-2920**	**Connect/Fitting** **TYPE** Ø(mm) 12 V **TYPE** MIN>PAG100 **QTY**(CC) 200 Valeo **699936**	200/300 (124), E Class (124), S Class (126) ⓘ+
	Valeo NEW **699190** Valeo ES **699690** OE 6453CN 6453JG SANDEN **TYPE** SD6V12 **CODE** **1412**	**Connect/Fitting** Flange V **TYPE** PV-6 Ø(mm) 119 12 V **TYPE** PAG46 **QTY**(CC) 135 Valeo **699935**	Xsara Picasso, 206 ⓘ+ Valeo Matching Quality
	Valeo NEW **699191** Valeo ES **699691** OE 7700111235 7701499850 SANDEN **TYPE** SD6V12 **CODE** **1417**	**Connect/Fitting** Flange V 45° **TYPE** PV-6 Ø(mm) 125 12 V **TYPE** PAG46 **QTY**(CC) 135 Valeo **699935**	Clio II, Kangoo ⓘ+

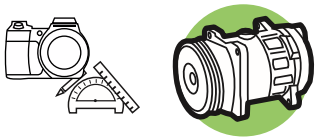

Valeo

		TECH	
	Valeo NEW **699193** Valeo ES **699693** OE 2D0820805B 701820805 SANDEN **TYPE** SD7H15 **CODE** **7820**	**Connect/Fitting** **TYPE** Ø(mm) **TYPE** **QTY**(CC) Valeo	LT, Transporter +
	Valeo NEW Valeo ES **699695** OE 1286220 DELPHI/HARRISON **TYPE** V5 **CODE** **1131737**	**Connect/Fitting** **TYPE** Ø(mm) **TYPE** **QTY**(CC) Valeo	Omega +
	Valeo NEW **699197** Valeo ES **699697** OE 7700103536 7701499859 DELPHI/HARRISON **TYPE** V5 **CODE** **1135289**	**Connect/Fitting** Flange H **TYPE** PV-6 Ø(mm) 124 12 V **TYPE** PAG125 **QTY**(CC) 220 Valeo **699937**	Mégane, Mégane Scénic +
	Valeo NEW Valeo ES **699698** OE 1H0820803J DELPHI/HARRISON **TYPE** V5 **CODE** **015124**	**Connect/Fitting** **TYPE** Ø(mm) **TYPE** **QTY**(CC) Valeo	Cordoba, Ibiza, Vento +
	Valeo NEW **699199** Valeo ES **699699** OE 6453CL SANDEN **TYPE** SD7V16 **CODE** **1211**	**Connect/Fitting** Flange V 45° **TYPE** PV-6 Ø(mm) 118 12 V **TYPE** PAG46 **QTY**(CC) 135 Valeo **699935**	206, 406, 607 807, Expert, Expert II +

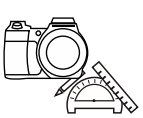

Valeo

		TECH	
Valeo NEW	699201	Connect/Fitting	Flange V
Valeo ES	699701	TYPE	PV-6
OE	60653653	Ø(mm)	129
	SANDEN		12 V
TYPE	SD7V16	TYPE	PAG46
CODE	1158	QTY(CC)	135
		Valeo	699935

145, 156, 166

Valeo NEW	699202	Connect/Fitting	Flange V 45°
Valeo ES		TYPE	PV-6
OE	7700115830	Ø(mm)	117
	SANDEN		12 V
TYPE	SD6V12	TYPE	PAG46
CODE	1415	QTY(CC)	135
		Valeo	699935

Clio II

Valeo NEW	699205	Connect/Fitting	Flange H
Valeo ES		TYPE	PV-7
OE	1028888	Ø(mm)	120
	VISTEON		12 V
TYPE	FS10	TYPE	PAG46
CODE	10-160-01028	QTY(CC)	200
		Valeo	699935

Scorpio

Valeo NEW	699209	Connect/Fitting	
Valeo ES		TYPE	PV-6
OE	1035435	Ø(mm)	145
	VALEO		12 V
TYPE	FS10	TYPE	PAG46
CODE	10-160-01014 10-160-01011/12	QTY(CC)	200
		Valeo	699935

Cougar, Mondeo

Valeo Matching Quality

Valeo NEW	699212	Connect/Fitting	Flange Top
Valeo ES		TYPE	A-2
OE	46443509	Ø(mm)	115
	SANDEN		12 V
TYPE	SD7B10	TYPE	PAG46
CODE	7150, 7170	QTY(CC)	100
		Valeo	699935

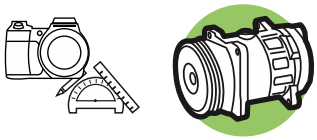

		TECH	
	Valeo NEW	Connect/Fitting Rotalock V	740-760-780, 940-960
	Valeo ES **699714**	TYPE AM2	
	OE 35131465	Ø(mm) 125	
	SANDEN	12 V	
	TYPE SD709	TYPE MIN>PAG100	
	CODE **7419**	QTY(CC) 135	
		Valeo **699936**	

	Valeo NEW	Connect/Fitting	Fiat Tipo, Tempra
	Valeo ES **699715**	TYPE	
	OE 7604446	Ø(mm)	
	DELPHI/HARRISON		
	TYPE V5	TYPE	
	CODE	QTY(CC)	
		Valeo	

	Valeo NEW **699216**	Connect/Fitting Flange V	Xsara, Xsara Picasso,
	Valeo ES **699716**	TYPE PV-6	206
	OE 6453EN 6453JH	Ø(mm) 121	
	SANDEN	12 V	
	TYPE SD6V12	TYPE PAG46	
	CODE **1421**	QTY(CC) 135	
		Valeo **699935**	

	Valeo NEW **699218**	Connect/Fitting Flange V 45°	Clio II, Kangoo
	Valeo ES **699718**	TYPE PV-6	
	OE 7700273801	Ø(mm) 120	
	SANDEN	12 V	
	TYPE SD6V12	TYPE PAG46	
	CODE **1416**	QTY(CC) 135	
		Valeo **699935**	

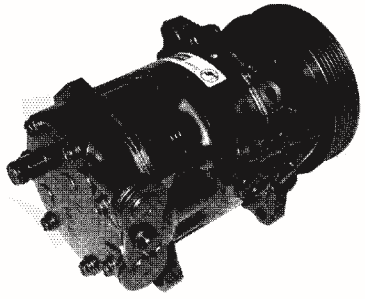

	Valeo NEW	Connect/Fitting Flange V	Accord VI , Civic V,
	Valeo ES **699720**	TYPE PV-6	200, 25, 400
	OE JPB100680 38800P5TG20	Ø(mm) 125	
	SANDEN	12 V	
	TYPE SD7V16	TYPE PAG46	
	CODE **1011, 1016**	QTY(CC) 135	
		Valeo **699935**	

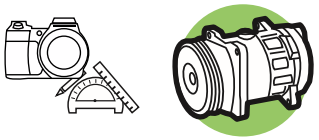

		TECH	
	Valeo NEW 699221 Valeo ES 699721 OE 7700106441 SANDEN TYPE SD7V16 CODE 1149	Connect/Fitting Flange V 45° TYPE PV-6 Ø(mm) 119 12 V TYPE PAG46 QTY(CC) 135 Valeo 699935	Clio II +
	Valeo NEW 699222 Valeo ES 699722 OE 8D0260805D 8D0260805M VALEO/ZEXEL TYPE DCW17D CODE 506031-0901	Connect/Fitting O-Ring H TYPE PV-4 Ø(mm) 123 12 V TYPE PAG46 QTY(CC) 250 Valeo 699935	A4, A6, Passat +
Picture not available Image non disponible Nicht verfügbares Bild Imagen no disponible Immagine non disponibile Zdjęcie niedostępne	Valeo NEW Valeo ES 699725 OE 8D0260805E VALEO/ZEXEL TYPE DCW17D CODE 506031-0881	Connect/Fitting TYPE Ø(mm) TYPE QTY(CC) Valeo	Audi A4 (94>2000) +
	Valeo NEW Valeo ES 699727 OE 4A0260805AH VALEO/ZEXEL TYPE DCW17D CODE 506031-0831	Connect/Fitting O-Ring H TYPE PV-6 Ø(mm) 130,5 12 V TYPE PAG46 QTY(CC) 275 Valeo 699935	100, 80, A6 Cab, Coupe, S6 +
	Valeo NEW 699234 Valeo ES 699734 OE 8200037058 SANDEN TYPE SD6V12 CODE 1427	Connect/Fitting Flange V TYPE PV-6 Ø(mm) 112 12 V TYPE PAG46 QTY(CC) 135 Valeo 699935	Clio II, Twingo +

		TECH	
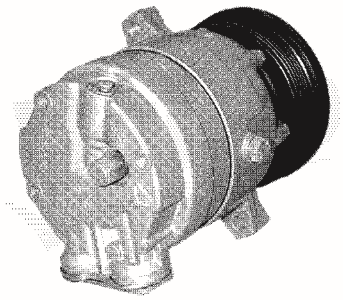	Valeo NEW Valeo ES **699735** OE 1854139 1854139 DELPHI/HARRISON **TYPE** 1135201 **CODE** **1135201** **1135273**	**Connect/Fitting** **TYPE** Ø(mm) 12 V **TYPE** PAG **QTY**(CC) 295 Valeo	Sintra +
Valeo	Valeo NEW **699236** Valeo ES **699736** OE 6453FE 9613260680 SANDEN **TYPE** SD7V16 **CODE** **1106, 1227**	**Connect/Fitting** Flange H **TYPE** PV-6 Ø(mm) 119 12 V **TYPE** PAG46 **QTY**(CC) 135 Valeo **699935**	Berlingo, C5, Evasion Jumper, Jumpy, Relay Synergie, Xantia, XM, Xsara + Valeo Matching Quality
Valeo	Valeo NEW **699237** Valeo ES **699737** OE 6453FS 6453JK SANDEN **TYPE** SD6V12 **CODE** **1431**	**Connect/Fitting** Flange V **TYPE** PV-4 Ø(mm) 120 12 V **TYPE** PAG46 **QTY**(CC) 135 Valeo **699935**	Berlingo, Saxo, 106, Partner + Valeo Matching Quality
Picture not available Image non disponible Nicht verfügbares Bild Imagen no disponible Immagine non disponibile Zdjęcie niedostępne	Valeo NEW Valeo ES **699738** OE SANDEN **TYPE** SD6V12 **CODE** **6G91GB, 6G91KD**	**Connect/Fitting** **TYPE** PV-6 Ø(mm) 117 12 V **TYPE** PAG **QTY**(CC) 200 Valeo	S-Max +
Valeo	Valeo NEW **699239** Valeo ES **699739** OE 6000073500 7711134208 SANDEN **TYPE** SD6V12 **CODE** **1422**	**Connect/Fitting** Flange V **TYPE** PV-6 Ø(mm) 112 12 V **TYPE** PAG46 **QTY**(CC) 135 Valeo **699935**	Clio II +

		TECH	
	Valeo NEW **699240** Valeo ES **699740** OE 8200021822 DELPHI/HARRISON **TYPE** V5 **CODE** **1135320**	**Connect/Fitting** Flange H **TYPE** PV-6 Ø(mm) 119 12 V **TYPE** PAG125 **QTY**(CC) 200 Valeo **699937**	Avantime, Laguna II, Vel Satis ⓘ+
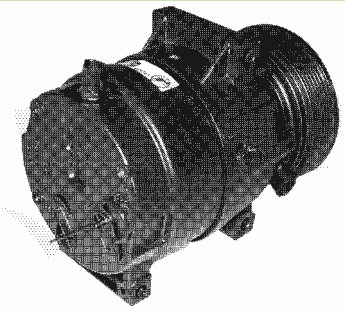	Valeo NEW **699241** Valeo ES **699741** OE 8200024397 DELPHI/HARRISON **TYPE** V5 **CODE** **1135321**	**Connect/Fitting** Flange H **TYPE** PV-6 Ø(mm) 125 12 V **TYPE** PAG125 **QTY**(CC) 265 Valeo **699937**	Laguna II ⓘ+
	Valeo NEW Valeo ES **699743** OE 93176870 DELPHI/HARRISON **TYPE** V5 **CODE** **1135294**	**Connect/Fitting** **TYPE** Ø(mm) **TYPE** **QTY**(CC) Valeo	Omega ⓘ+
	Valeo NEW Valeo ES **699745** OE 1854128 DENSO **TYPE** 6CA17C **CODE** **447100-3360**	**Connect/Fitting** **TYPE** Ø(mm) **TYPE** **QTY**(CC) Valeo	Omega ⓘ+
	Valeo NEW **699246** Valeo ES **699746** OE 8200050141 7711135105 DELPHI/HARRISON **TYPE** CVC **CODE** **1139026**	**Connect/Fitting** Flange H **TYPE** PV-6 Ø(mm) 124 12 V **TYPE** PAG125 **QTY**(CC) 220 Valeo **699937**	Mégane II, Scénic II ⓘ+

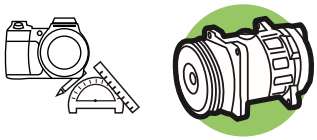

Valeo

		TECH	
	Valeo NEW	Connect/Fitting	Agila, Corsa
	Valeo ES 699748	TYPE	
	OE 9167048 6854021	Ø(mm)	
	DELPHI/HARRISON		
	TYPE V5	TYPE	
	CODE 9116419	QTY(CC)	
		Valeo	

	Valeo NEW	Connect/Fitting	Astra G, Astra IV
	Valeo ES 699749	TYPE	
	OE 6854022	Ø(mm)	
	DELPHI/HARRISON		
	TYPE CVC	TYPE	
	CODE 9174395	QTY(CC)	
		Valeo	

	Valeo NEW 699250	Connect/Fitting Flange V 45°	Astra G, Astra IV
	Valeo ES 699750	TYPE PV-5	
	OE 1854102	Ø(mm) 105	
	DELPHI/HARRISON	12 V	
	TYPE CVC	TYPE PAG125	
	CODE 9174396	QTY(CC) 150	
		Valeo 699937	

	Valeo NEW 699251	Connect/Fitting Flange V 45°	Astra G, Astra IV
	Valeo ES 699751	TYPE PV-4	
	OE 1854103 93176857	Ø(mm) 110	
	DELPHI/HARRISON	12 V	
	TYPE CVC	TYPE PAG125	
	CODE 9174397	QTY(CC) 150	
		Valeo 699937	

	Valeo NEW	Connect/Fitting	Astra G, Astra IV
	Valeo ES 699752	TYPE	
	OE 6854023	Ø(mm)	
	DELPHI/HARRISON		
	TYPE CVC	TYPE	
	CODE 2392	QTY(CC)	
		Valeo	

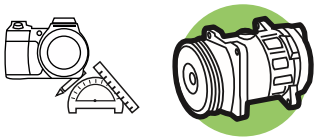

		TECH	
	Valeo NEW		Connect/Fitting Flange H	850
	Valeo ES 699753		TYPE PV-6	
	OE 91660456 3545088		Ø(mm) 123	
	VALEO/ZEXEL		12 V	
	TYPE DKS15CH		TYPE PAG100	
	CODE 506011-6744 506011-3504		QTY(CC) 200	
			Valeo 699936	
	Valeo NEW 699260		Connect/Fitting Flange H	C70, S70, V70
	Valeo ES		TYPE PV-6	
	OE 8601533		Ø(mm) 123	
	VALEO/ZEXEL		12 V	
	TYPE DKS15CH		TYPE PAG46	
	CODE 506011-8272		QTY(CC) 200	
			Valeo 699935	
	Valeo NEW 699261		Connect/Fitting Flange H	C70, S70, V70
	Valeo ES		TYPE PV-6	
	OE 8601631		Ø(mm) 129	
	VALEO/ZEXEL		12 V	
	TYPE DKS15CH		TYPE PAG46	
	CODE 506011-8834F		QTY(CC) 200	
			Valeo 699935	
	Valeo NEW 699262		Connect/Fitting Flange H	S60, S80, V70
	Valeo ES		TYPE PV-6	
	OE 8602621 8602621		Ø(mm) 123	
	VALEO/ZEXEL		12 V	
	TYPE DKS17CH		TYPE PAG46	
	CODE 506011-8207		QTY(CC) 180	
			Valeo 699935	
	Valeo NEW 699263		Connect/Fitting Flange H	S80
	Valeo ES		TYPE PV-6	
	OE 8601632		Ø(mm) 123	
	VALEO/ZEXEL		12 V	
	TYPE DKS15CH		TYPE PAG46	
	CODE 506011-8501		QTY(CC) 180	
			Valeo 699935	

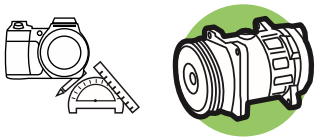

Valeo

		TECH	
	Valeo NEW 699264 Valeo ES OE 8602278 VALEO/ZEXEL TYPE DKS17D CODE 506012-01821F	Connect/Fitting TYPE PV-6 Ø(mm) 123 12 V TYPE PAG46 QTY(CC) 180 Valeo 699935	S60, S80, V70
	Valeo NEW Valeo ES 699766 OE 8671016164 DELPHI/HARRISON TYPE CVC CODE 1139027	Connect/Fitting TYPE Ø(mm) TYPE QTY(CC) Valeo	Mégane II, Scénic II
	Valeo NEW Valeo ES 699767 OE 90564976 DENSO TYPE 7SB16C CODE 447100-9510	Connect/Fitting TYPE Ø(mm) TYPE QTY(CC) Valeo	Omega
	Valeo NEW Valeo ES 699768 OE 1854133 DENSO TYPE 7SB16C CODE 447200-8010	Connect/Fitting TYPE Ø(mm) TYPE QTY(CC) Valeo	Campo
	Valeo NEW Valeo ES 699769 OE 1854120 DENSO TYPE 7SB16C CODE 447170-7552	Connect/Fitting TYPE Ø(mm) TYPE QTY(CC) Valeo	Zafira

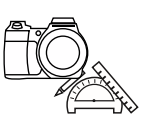

Valeo

				TECH	
Valeo	NEW	699270	Connect/Fitting	Flange V 45°	Astra G, Combo Tour, Corsa C, Meriva, Tigra TwinTop
Valeo	ES	699770	TYPE	PV-5	
OE		1854111 6854024	Ø(mm)	105	
		DELPHI/HARRISON		12 V	
TYPE		CVC	TYPE	PAG125	
CODE		9165714	QTY(CC)	150	
			Valeo	699937	

Valeo	NEW		Connect/Fitting		Agila
Valeo	ES	699771	TYPE		
OE		13197255 R1580052	Ø(mm)		
		DELPHI/HARRISON			
TYPE		CVC	TYPE		
CODE		7255	QTY(CC)		
			Valeo		

Valeo	NEW	699272	Connect/Fitting		Berlingo, C5, C8 Xsara, Xsara Picasso, 307, 406, 607 Partner, Ranch, Boxer
Valeo	ES	699772	TYPE	PV-6	
OE		6453LQ 6453JN	Ø(mm)	119	
		SANDEN		12 V	
TYPE		SD7V16	TYPE	PAG46	
CODE		1240	QTY(CC)	135	Valeo Matching Quality
			Valeo	699935	

Valeo	NEW	699275	Connect/Fitting	Flange	Superb, Passat
Valeo	ES	699775	TYPE	PV-4	
OE		4B0260805C	Ø(mm)	126	
		VALEO		12 V	
TYPE		7SBU16C	TYPE	PAG46	
CODE		447170 6290 447100 9440	QTY(CC)	250	Valeo Matching Quality
			Valeo	699935	

Valeo	NEW	699279	Connect/Fitting	Flange	156, Marea
Valeo	ES		TYPE	PV-6	
OE		60814060 46479556	Ø(mm)	155	
		DENSO		12 V	
TYPE		TV12SC	TYPE	PAG100	
CODE		447100-1200	QTY(CC)	150	
			Valeo	699936	

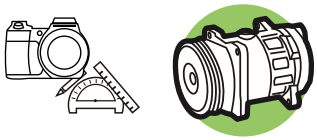

Valeo

		TECH	
	Valeo NEW **699280** Valeo ES OE 46514443 DENSO **TYPE** SC08C **CODE** 447170-0050	**Connect/Fitting** Flange V **TYPE** PV-4/PV-4 Ø(mm) 135+125 12 V **TYPE** PAG46 **QTY**(CC) 80 Valeo **699935**	Brava, Bravo, Doblo Marea, Palio, Siena Strada pick up, Y Ipsilon ⓘ+
	Valeo NEW **699281** Valeo ES OE 46514137 DENSO **TYPE** TV12SC **CODE** 447100-1180	**Connect/Fitting** Flange **TYPE** PV-6 Ø(mm) 126 12 V **TYPE** PAG100 **QTY**(CC) 150 Valeo **699936**	Bravo, Coupe, Marea Lybra ⓘ+
	Valeo NEW **699283** Valeo ES OE 46757168 46785772 DENSO **TYPE** SC08C **CODE** 447100-1560 59247-5900	**Connect/Fitting** **TYPE** PV-5 Ø(mm) 120 12 V **TYPE** PAG46 **QTY**(CC) 80 Valeo **699935**	Punto II ⓘ+
	Valeo NEW **699284** Valeo ES OE 46786262 60815788 DENSO **TYPE** SCS08C **CODE** 447170-0690 59247-6000	**Connect/Fitting** Flange H **TYPE** PV-6 Ø(mm) 120 12 V **TYPE** PAG46 **QTY**(CC) 80 Valeo **699935**	145, 146, Barchetta, Brava, Bravo Doblo, Marea, Palio Punto II, Strada pick up ⓘ+
	Valeo NEW **699286** Valeo ES OE 7765865 DENSO **TYPE** TV12EC **CODE** 447100-0420 50777-2000	**Connect/Fitting** Flange **TYPE** PV-4+PV-4 Ø(mm) 135+125 12 V **TYPE** PAG100 **QTY**(CC) 150 Valeo **699936**	Punto, Y Ipsilon ⓘ+

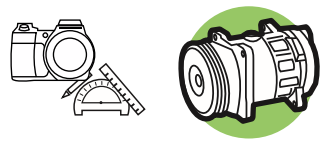

		TECH	
Valeo NEW	699287	Connect/Fitting	Flange
Valeo ES		TYPE	PV-4
OE	7741901	Ø(mm)	125
	DENSO		12 V
TYPE	TV14EC	TYPE	PAG100
CODE	447100-0020	QTY(CC)	160
		Valeo	699936

Punto

Valeo NEW	699288	Connect/Fitting	Flange
Valeo ES		TYPE	PV-4
OE	7736928	Ø(mm)	125
	DENSO		12 V
TYPE	TV14EC	TYPE	PAG100
CODE	447100-0030	QTY(CC)	150
		Valeo	699936

Palio, Punto, Siena

Valeo NEW	699289	Connect/Fitting	Flange
Valeo ES		TYPE	PV-4
OE	46438576	Ø(mm)	135
	DENSO		12 V
TYPE	TV12SC	TYPE	PAG100
CODE	447100-0960	QTY(CC)	150
		Valeo	699936

Brava, Bravo, Marea

Dedra, Delta

Valeo NEW	699290	Connect/Fitting	Flange H
Valeo ES		TYPE	PV-6
OE	46438366	Ø(mm)	135
	DENSO		12 V
TYPE	TV12SC	TYPE	PAG100
CODE	447100-0950	QTY(CC)	150
		Valeo	699936

Barchetta, Brava, Bravo

Coupe, Marea, Marengo

Punto II,

Y Ipsilon

Valeo NEW	699296	Connect/Fitting	
Valeo ES		TYPE	PV-6
OE	38810PT0003	Ø(mm)	118
	DENSO		12 V
TYPE	10PA17C	TYPE	PAG46
CODE	047200-7212	QTY(CC)	160
		Valeo	699935

Accord IV, Accord V

Accord Aerodeck,

Accord coupe

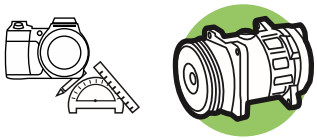

Valeo

		TECH	
	Valeo NEW **699298** Valeo ES **699798** OE 0002302011 / 0002307011 VALEO **TYPE** 7SBU16C **CODE** 447100 5730 / 447100 7680	**Connect/Fitting** Flange V **TYPE** PV-6 Ø(mm) 119 12 V **TYPE** PAG46 **QTY**(CC) 155 Valeo **699935**	CLK (208), E Class (210) G Class, M Class (163) S Class (140), SLK(R170) Sprinter, V Class (638/2) Vito Valeo Matching Quality
	Valeo NEW **699299** Valeo ES OE 0002301311 DENSO **TYPE** 6CA17C **CODE** 447100-2480	**Connect/Fitting** **TYPE** PV-6 Ø(mm) 125 12 V **TYPE** PAG46 **QTY**(CC) 145 Valeo **699935**	C Class (202), CLK (208)
	Valeo NEW **699300** Valeo ES **699800** OE 0002305911 / 0002307911 DENSO **TYPE** 6SEU12C **CODE** 447190-9360	**Connect/Fitting** Flange **TYPE** PV-5 Ø(mm) 100 12 V **TYPE** PAG46 **QTY**(CC) 100 Valeo **699935**	Vaneo (414)
	Valeo NEW **699301** Valeo ES OE 1854096 / 24430230 DENSO **TYPE** 7SBU16C **CODE** 447100-8650	**Connect/Fitting** Flange V **TYPE** PV-5 Ø(mm) 110 12 V **TYPE** PAG46 **QTY**(CC) 120 Valeo **699935**	Zafira
	Valeo NEW **699303** Valeo ES **699803** OE 6N0820803B / 6N0820803C SANDEN **TYPE** SD6V12 **CODE** 1410, 1454	**Connect/Fitting** Flange H **TYPE** PV-6 Ø(mm) 100 12 V **TYPE** PAG46 **QTY**(CC) 120 Valeo **699935**	Arosa, Cordoba, Ibiza, Lupo, Polo

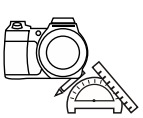

Valeo

			TECH	
	Valeo NEW	699306	Connect/Fitting	Flange V
	Valeo ES	699806	TYPE	PV-6
	OE	1854147 6854048	Ø(mm)	105
		SANDEN		12 V
	TYPE	SD6V12	TYPE	PAG46
	CODE	1429, 1418 1440	QTY(CC)	135
			Valeo	699935

Combo Tour, Corsa C,
Meriva, Corsa II, Astra G

	Valeo NEW	699307	Connect/Fitting	Flange V
	Valeo ES	699807	TYPE	PV-5
	OE	1854113 9132925	Ø(mm)	120
		SANDEN		12 V
	TYPE	PXV16	TYPE	PAG46
	CODE	8600, 8629	QTY(CC)	120
			Valeo	699935

Astra G, Vectra B, Zafira
Astra IV, Vectra, Zafira

'93176856

	Valeo NEW	699310	Connect/Fitting	Flange H
	Valeo ES		TYPE	PV-6
	OE	55037205AG	Ø(mm)	120
		SANDEN		12 V
	TYPE	SD7H15	TYPE	PAG100
	CODE	4636, 4828	QTY(CC)	135
			Valeo	699936

Cherokee,
Grand Cherokee

	Valeo NEW	699311	Connect/Fitting	Flange V
	Valeo ES		TYPE	PV-6 & PV-4
	OE	46759036	Ø(mm)	120
		SANDEN		12 V
	TYPE	SD6V12	TYPE	PAG46
	CODE	1434	QTY(CC)	135
			Valeo	699935

Stilo

	Valeo NEW	699314	Connect/Fitting	Flange V
	Valeo ES		TYPE	PV-6
	OE	JPB000150	Ø(mm)	126
		SANDEN		12 V
	TYPE	SD7V16	TYPE	PAG46
	CODE	1219	QTY(CC)	135
			Valeo	699935

200, 25,
400, 45,
Streetwise

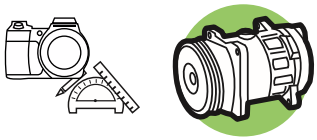

Valeo

		TECH	
	Valeo NEW **699315** Valeo ES OE JPB101230 SANDEN **TYPE** SD7V16 **CODE** 1220	**Connect/Fitting** Flange V **TYPE** PV-6 Ø(mm) 126 12 V **TYPE** PAG46 **QTY**(CC) 135 Valeo **699935**	400, 45 ⓘ+
	Valeo NEW **699316** Valeo ES OE 4635892 SANDEN **TYPE** TRS105 **CODE** 3211	**Connect/Fitting** Flange V **TYPE** PV-6 Ø(mm) 100 12 V **TYPE** PAG46 **QTY**(CC) 220 Valeo **699935**	9-3 ⓘ+
	Valeo NEW **699317** Valeo ES **699817** OE 6854007 93176866 SANDEN **TYPE** PXV16 **CODE** 8612, 8620 8634	**Connect/Fitting** Flange V **TYPE** PV-5 Ø(mm) 110 12 V **TYPE** PAG46 **QTY**(CC) 120 Valeo **699935**	Signum, Vectra C ⓘ+
	Valeo NEW **699318** Valeo ES **699818** OE 6854003 93176868 SANDEN **TYPE** PXV16 **CODE** 8609, 8633	**Connect/Fitting** Flange V **TYPE** PV-5 Ø(mm) 120 12 V **TYPE** PAG46 **QTY**(CC) 120 Valeo **699935**	Signum, Vectra C ⓘ+
	Valeo NEW **699320** Valeo ES OE 64526914369 DENSO **TYPE** 7SBU16C **CODE** 447170-9230	**Connect/Fitting** **TYPE** PV-4 Ø(mm) 125 12 V **TYPE** PAG46 **QTY**(CC) 160 Valeo **699935**	5 E39, 7 E38 ⓘ+

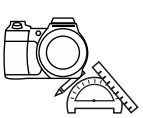

Valeo

		TECH	
	Valeo NEW 699321	Connect/Fitting	5 E39
	Valeo ES	TYPE PV-5	
	OE 64526914371	Ø(mm) 110	
		12 V	
	DENSO	TYPE PAG46	
	TYPE 7SB16C	QTY(CC) 160	
	CODE 447170-9250	Valeo 699935	i +
	Valeo NEW 699322	Connect/Fitting	3 E36
	Valeo ES	TYPE PV-4	
	OE 64528371021	Ø(mm) 125	
		12 V	
	DENSO	TYPE PAG46	
	TYPE 10PA17C	QTY(CC) 120	
	CODE 447170-3860	Valeo 699935	i +
	Valeo NEW 699323	Connect/Fitting	5 E39, 7 E38
	Valeo ES 699823	TYPE PV-5	
	OE 64526914370	Ø(mm) 110	
		12 V	
	DENSO	TYPE PAG46	
	TYPE 7SBU16C	QTY(CC) 160	
	CODE 447170-9240	Valeo 699935	i +
	Valeo NEW	Connect/Fitting Flange V	Zafira
	Valeo ES 699824	TYPE PV-6	
	OE 6854001 93176862	Ø(mm) 115	
		12 V	
	DENSO	TYPE PAG46	
	TYPE 7SBU16C	QTY(CC) 120	
	CODE 447170-8660	Valeo 699935	i +
	Valeo NEW 699325	Connect/Fitting	Accord Aerodeck, Accord coupe, Accord VII
	Valeo ES 699825	TYPE PV-4	
	OE 38810P3G003	Ø(mm) 119	
		12 V	
	DENSO	TYPE PAG46	
	TYPE 10PA17C	QTY(CC) 160	
	CODE	Valeo 699935	i +

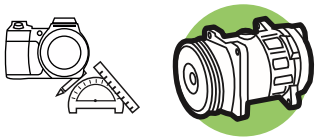

Valeo

		TECH	
	Valeo NEW 699326 Valeo ES 699826 OE 1123560 VISTEON TYPE TRV10 CODE 10-160-01001	Connect/Fitting TYPE PV-6 Ø(mm) 97 12 V TYPE PAG46 QTY(CC) 220 Valeo 699935	Fiesta, Focus, Fusion Transit, Transit Connect +
	Valeo NEW 699327 Valeo ES 699827 OE 1308989 VALEO TYPE FS10 CODE 10-160-01021	Connect/Fitting TYPE PV-6 Ø(mm) 129 12 V TYPE PAG46 QTY(CC) 170 Valeo 699935	Mondeo, Transit + Valeo Matching Quality
	Valeo NEW 699328 Valeo ES 699828 OE 4124547 VISTEON TYPE TRV10 CODE 10-160-01025	Connect/Fitting TYPE PV-6 Ø(mm) 97 12 V TYPE PAG46 QTY(CC) 200 Valeo 699935	Mondeo, Mondeo +
	Valeo NEW 699330 Valeo ES 699830 OE 1034699 VALEO TYPE FS10 CODE 10-160-01018	Connect/Fitting TYPE PV-6 Ø(mm) 137 12 V TYPE PAG46 QTY(CC) 207 Valeo 699935	Fiesta, Puma, 121 + Valeo Matching Quality
Picture not available Image non disponible Nicht verfügbares Bild Imagen no disponible Immagine non disponibile Zdjęcie niedostępne	Valeo NEW Valeo ES 699834 OE VISTEON TYPE FS10 CODE	Connect/Fitting TYPE Ø(mm) TYPE QTY(CC) Valeo	+

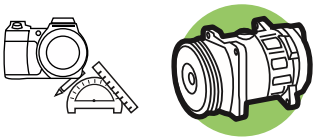

		TECH	
	Valeo NEW 699336	Connect/Fitting	Mondeo
	Valeo ES 699836	TYPE PV-6	
	OE 1S7H19D629DD 1S7H19D629DA	Ø(mm) 107	
	VISTEON	12 V	
	TYPE Scroll	TYPE PAG46	
	CODE 10-160-01027 10-160-01026	QTY(CC) 200	1S7H19D629DC
		Valeo 699935	

	Valeo NEW 699337	Connect/Fitting Flange V	Transit
	Valeo ES 699837	TYPE PV-7	
	OE 4502836	Ø(mm) 129	
	VALEO	12 V	
	TYPE FS10	TYPE PAG46	
	CODE 10-160-01020	QTY(CC) 170	Valeo Matching Quality
		Valeo 699935	

Picture not available Image non disponible Nicht verfügbares Bild Imagen no disponible Immagine non disponibile Zdjęcie niedostępne	Valeo NEW	Connect/Fitting	
	Valeo ES 699840	TYPE	
	OE	Ø(mm)	
	VISTEON		
	TYPE FS10	TYPE	
	CODE	QTY(CC)	
		Valeo	

	Valeo NEW 699345	Connect/Fitting	Carisma
	Valeo ES	TYPE 1 G	
	OE MR262971	Ø(mm) 129	
	SANDEN	12 V	
	TYPE SD7H15	TYPE PAG100	
	CODE 7983	QTY(CC) 120	
		Valeo 699936	

	Valeo NEW 699346	Connect/Fitting Flange V	9.5
	Valeo ES	TYPE 1 G	
	OE 5048368	Ø(mm) 130	
	SANDEN	12 V	
	TYPE PXV16	TYPE PAG46	
	CODE 8614, 8624 8635	QTY(CC) 120	
		Valeo 699935	

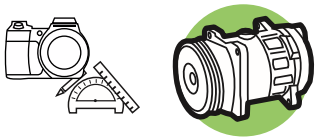

Valeo

		TECH	
	Valeo NEW **699347** Valeo ES OE JPB101460 SANDEN **TYPE** PXV16 **CODE** **8622**	**Connect/Fitting** Flange V **TYPE** PV-6 Ø(mm) 120 12 V **TYPE** PAG46 **QTY**(CC) 120 Valeo **699935**	Freelander, 75 +
	Valeo NEW **699348** Valeo ES **699848** OE 24411280 SANDEN **TYPE** PXV16 **CODE** **8617, 8631**	**Connect/Fitting** Flange V **TYPE** PV-5 Ø(mm) 120 12 V **TYPE** PAG46 **QTY**(CC) 120 Valeo **699935**	9.3 +
	Valeo NEW **699349** Valeo ES OE 6453PQ SANDEN **TYPE** SD7C16 **CODE** **1304**	**Connect/Fitting** **TYPE** PV-6 Ø(mm) 119 12 V **TYPE** PAG46 **QTY**(CC) 135 Valeo **699935**	C5, 407 +
	Valeo NEW **699351** Valeo ES OE 6453PN SANDEN **TYPE** SD7C16 **CODE** **1300**	**Connect/Fitting** **TYPE** PV-6 Ø(mm) 119 12 V **TYPE** PAG46 **QTY**(CC) 180 Valeo **699935**	C5, 407 +
	Valeo NEW **699355** Valeo ES **699855** OE 6854019 6854005 SANDEN **TYPE** PXV16 **CODE** **8618, 8632**	**Connect/Fitting** Flange V **TYPE** PV-6 Ø(mm) 118 12 V **TYPE** PAG46 **QTY**(CC) 120 Valeo **699935**	Signum, Vectra C, 9-3 + 24411249 13140505

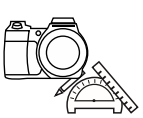

		TECH	
	Valeo NEW **699357** Valeo ES **699857** OE 1K0820803N 1K0820803Q VALEO/ZEXEL **TYPE** DCS17E **CODE** 506041-0270	**Connect/Fitting** **TYPE** PV-6 Ø(mm) 120 12 V **TYPE** PAG46 **QTY**(CC) 120 Valeo **699935**	A3, Altea, Toledo, Leon II Octavia, Golf V, Passat, Touran ⓘ+
	Valeo NEW **699358** Valeo ES **699858** OE 6453KW SANDEN **TYPE** SD6V12 **CODE** 1437	**Connect/Fitting** **TYPE** PV-6 Ø(mm) 119 12 V **TYPE** PAG46 **QTY**(CC) 135 Valeo **699935**	206, 307 ⓘ+
	Valeo NEW Valeo ES **699859** OE 6453PE SANDEN **TYPE** SD6V12 **CODE** 1444	**Connect/Fitting** **TYPE** PV-6 Ø(mm) 119 12 V **TYPE** PAG46 **QTY**(CC) 135 Valeo **699935**	307 ⓘ+
	Valeo NEW Valeo ES **699860** OE 8200067915 DELPHI/HARRISON **TYPE** CVC **CODE** 1139509	**Connect/Fitting** **TYPE** Ø(mm) **TYPE** **QTY**(CC) Valeo	Espace IV (2002>) ⓘ+
	Valeo NEW Valeo ES **699861** OE 8200678510 DELPHI/HARRISON **TYPE** V5 **CODE** 1135514	**Connect/Fitting** **TYPE** Ø(mm) **TYPE** **QTY**(CC) Valeo	Master, trafic ⓘ+

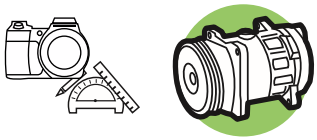

Valeo

		TECH	
	Valeo NEW	Connect/Fitting	Astra G, Meriva, Zafira
	Valeo ES 699862	TYPE	
	OE	Ø(mm)	
	DELPHI/HARRISON		
	TYPE CVC	TYPE	
	CODE 1134750	QTY(CC)	
		Valeo	

	Valeo NEW 699366	Connect/Fitting	113, 114, 124
	Valeo ES	TYPE PV-8	
	OE 1412263	Ø(mm) 119	
	SANDEN	24 V	
	TYPE SD7H15	TYPE PAG46	
	CODE 8067	QTY(CC) 210	
		Valeo 699935	

	Valeo NEW	Connect/Fitting Flange V	Agila
	Valeo ES 699867	TYPE PV-5	
	OE 93178275 6854055	Ø(mm) 114	
	SANDEN	12 V	
	TYPE SD6V10	TYPE PAG46	
	CODE 1512	QTY(CC) 135	
		Valeo 699935	

Picture not available Image non disponible Nicht verfügbares Bild Imagen no disponible Immagine non disponibile Zdjęcie niedostępne	Valeo NEW 699368	Connect/Fitting	Vectra C, Vectra
	Valeo ES 699868	TYPE PV-6	
	OE 51760316 131171593	Ø(mm) 120	
	SANDEN	12 V	
	TYPE SD7V16	TYPE PAG46	
	CODE 1254, 1258	QTY(CC) 135	93187228
		Valeo 699935	

	Valeo NEW	Connect/Fitting	Meriva
	Valeo ES 699869	TYPE	
	OE 6854080	Ø(mm)	
	DELPHI/HARRISON	12 V	
	TYPE CVC	TYPE PAG125	
	CODE 5197	QTY(CC) 150	
		Valeo 699937	

		TECH	

	Valeo NEW		Connect/Fitting		Astra G
	Valeo ES	699870	TYPE	
	OE	93176884	Ø(mm)	
		SANDEN		
	TYPE	SD6V12	TYPE	
	CODE	1441	QTY(CC)	
			Valeo		ⓘ+

	Valeo NEW	699373	Connect/Fitting	Flange	Doblo, Marea, Stilo
	Valeo ES		TYPE	PV-4	
	OE	46809223	Ø(mm)	120	
		DENSO		12 V	
	TYPE	5SL12C-T	TYPE	PAG46	
	CODE	447170-8950 5A007-5000	QTY(CC)	80	
			Valeo	699935	ⓘ+

	Valeo NEW	699374	Connect/Fitting	Flange	Stilo
	Valeo ES		TYPE	PV-6	
	OE	46811244	Ø(mm)	135	
		DENSO		12 V	
	TYPE	5SL12C-J	TYPE	PAG46	
	CODE	447170-8960	QTY(CC)	80	
			Valeo	699935	ⓘ+

	Valeo NEW	699376	Connect/Fitting		A4 (94>2000)
	Valeo ES	699876	TYPE	PV-4	
	OE	8D0260805J 8D0260805RX	Ø(mm)	120	
		DENSO		12 V	
	TYPE	7SBU16C	TYPE	PAG46	
	CODE		QTY(CC)	245	
			Valeo	699935	ⓘ+

	Valeo NEW	699380	Connect/Fitting		A4
	Valeo ES	699880	TYPE	PV-4	
	OE	8E0260805AB 8E0260805	Ø(mm)	110	
		DENSO		12 V	
	TYPE	7SEU16C	TYPE	PAG46	
	CODE	447180-5350	QTY(CC)		
			Valeo	699935	ⓘ+

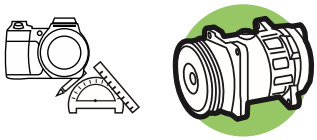

Valeo

		TECH	
	Valeo NEW **699381** Valeo ES OE 8E0260805C DENSO **TYPE** 6SEU12C **CODE** 447190-8680	**Connect/Fitting** **TYPE** PV-6 Ø(mm) 110 12 V **TYPE** PAG46 **QTY**(CC) Valeo **699935**	A4, A4 Cab ⓘ+
	Valeo NEW **699383** Valeo ES **699883** OE 6Q0820803D/J/K DENSO **TYPE** 6SEU12C **CODE** 447190-4360	**Connect/Fitting** Flange **TYPE** PV-6 Ø(mm) 110 12 V **TYPE** PAG46 **QTY**(CC) 180 Valeo **699935**	Ibiza, Fabia, Bora, Golf IV, Lupo, Polo ⓘ+
	Valeo NEW **699391** Valeo ES OE 46525369 DELPHI/HARRISON **TYPE** V5 **CODE** 1135296	**Connect/Fitting** Flange Top **TYPE** PV-4 Ø(mm) 119 12 V **TYPE** PAG125 **QTY**(CC) 265 Valeo **699937**	Bravo, Marea, Multipla, Lybra ⓘ+
	Valeo NEW **699392** Valeo ES OE 6453RK 883100H020 VALEO/ZEXEL **TYPE** DKV06R **CODE** 506021-7372F	**Connect/Fitting** **TYPE** Ø(mm) 12 V **TYPE** PAG100 **QTY**(CC) Valeo **699936**	C1, 107, Aygo ⓘ+
	Valeo NEW **699393** Valeo ES **699893** OE 6453RJ 883100H010 VALEO/ZEXEL **TYPE** DKV06R **CODE** 506021-7332F	**Connect/Fitting** **TYPE** Ø(mm) 12 V **TYPE** PAG100 **QTY**(CC) Valeo **699936**	C1, 107, Aygo ⓘ+

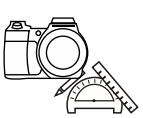

		TECH	
	Valeo NEW Valeo ES **699894** OE 6854040 DENSO **TYPE** 7SBU16C **CODE** 506012-0330	**Connect/Fitting** **TYPE** Ø(mm) **TYPE** **QTY**(CC) Valeo	Omega ⓘ+
	Valeo NEW Valeo ES **699895** OE 6854013 DELPHI/HARRISON **TYPE** CVC **CODE** 4152	**Connect/Fitting** **TYPE** Ø(mm) **TYPE** **QTY**(CC) Valeo	Zafira ⓘ+
	Valeo NEW Valeo ES **699896** OE 1854148 DENSO **TYPE** 7SB16C **CODE** 447170-8640	**Connect/Fitting** **TYPE** Ø(mm) **TYPE** **QTY**(CC) Valeo	Zafira (98>2003) ⓘ+
	Valeo NEW Valeo ES **699897** OE 6854000 DENSO **TYPE** 7SBU16C **CODE** 447170-8651	**Connect/Fitting** **TYPE** Ø(mm) **TYPE** **QTY**(CC) Valeo	Zafira ⓘ+
	Valeo NEW Valeo ES **699898** OE 1854119 DELPHI/HARRISON **TYPE** CVC **CODE** 9132918	**Connect/Fitting** **TYPE** Ø(mm) **TYPE** **QTY**(CC) Valeo	Astra G, Corsa C ⓘ+

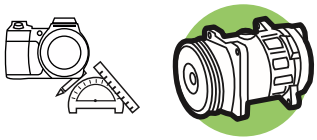

		TECH	
	Valeo NEW	Connect/Fitting Flange V 45°	Astra G
	Valeo ES **699899**	TYPE PV-6	
	OE 1854086	Ø(mm) 105	
	SANDEN	12 V	
	TYPE SD6V12	TYPE PAG46	
	CODE **1414**	QTY(CC) 135	
		Valeo **699935**	
	Valeo NEW	Connect/Fitting	Astra G (98>)
	Valeo ES **699900**	TYPE	
	OE 93176127	Ø(mm)	
	SANDEN		
	TYPE SD6V12	TYPE	
	CODE	QTY(CC)	
		Valeo	
Picture not available Image non disponible Nicht verfügbares Bild Imagen no disponible Immagine non disponibile Zdjęcie niedostępne	Valeo NEW **699405**	Connect/Fitting Flange H	Astra G
	Valeo ES	TYPE PV-6	
	OE 1854122	Ø(mm) 105	
	SANDEN	12 V	
	TYPE SD6V12	TYPE PAG46	
	CODE **1423, 1428** **1441**	QTY(CC) 135	
		Valeo **699935**	
	Valeo NEW	Connect/Fitting	Corsa C, Tigra TwinTop, Combo (2002>)
	Valeo ES **699912**	TYPE	
	OE 6854032 R1580030	Ø(mm)	
	SANDEN		
	TYPE SD6V12	TYPE	
	CODE **1447**	QTY(CC)	
		Valeo	
	Valeo NEW	Connect/Fitting	Logan
	Valeo ES **699914**	TYPE PV-4	
	OE 8200117767	Ø(mm) 120	
	SANDEN	12 V	
	TYPE SD7V16	TYPE	
	CODE **1176**	QTY(CC)	
		Valeo	

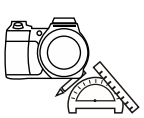

		TECH	

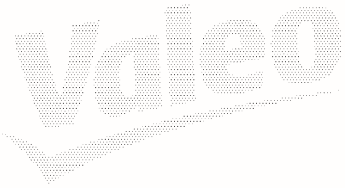

Valeo NEW	813007
Valeo ES	
OE	5010483009
	SANDEN
TYPE	SD7H15
CODE	8095

Connect/Fitting	
TYPE	A-2
Ø(mm)	132
	24 V
TYPE	PAG46
QTY(CC)	165
Valeo	699935

Magnum 400, 440, 480

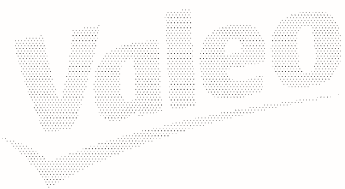

Valeo NEW	813012
Valeo ES	
OE	8142555
	SANDEN
TYPE	SD7H15
CODE	7834

Connect/Fitting	
TYPE	PV-8
Ø(mm)	132
	24 V
TYPE	PAG100
QTY(CC)	175
Valeo	699936

FH12, FH16

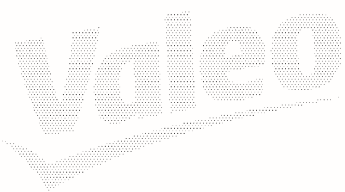

Valeo NEW	813013
Valeo ES	
OE	3962650
	SANDEN
TYPE	SD7H15
CODE	8003

Connect/Fitting	
TYPE	PV-8
Ø(mm)	132
	24 V
TYPE	PAG46
QTY(CC)	175
Valeo	699935

FH12, FH16

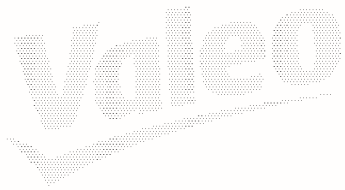

Valeo NEW	813014
Valeo ES	
OE	8161906-6012
	SANDEN
TYPE	SD7H15
CODE	8117

Connect/Fitting	
TYPE	PV-8
Ø(mm)	119
	24 V
TYPE	PAG46
QTY(CC)	150
Valeo	699935

TGA

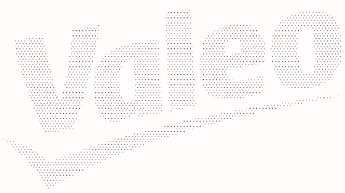

Valeo NEW	813016
Valeo ES	
OE	1376999 1412264
	SANDEN
TYPE	SD7H15
CODE	8068

Connect/Fitting	
TYPE	A-2
Ø(mm)	132
	24 V
TYPE	PAG46
QTY(CC)	240
Valeo	699935

94

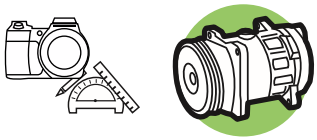

Valeo

		TECH	
	Valeo NEW **813017** Valeo ES OE 8191892, 8113628 SANDEN **TYPE** SD7H15 **CODE** 8176	**Connect/Fitting** **TYPE** PV-8 Ø(mm) 132 24 V **TYPE** PAG46 **QTY**(CC) 175 Valeo **699935**	FH12, FH16 ⓘ+
	Valeo NEW **813019** Valeo ES OE 1638737, 1444295 SANDEN **TYPE** SD7H15 **CODE** 8182	**Connect/Fitting** **TYPE** A-1 Ø(mm) 133 24 V **TYPE** **QTY**(CC) Valeo	75, 85, 95 ⓘ+
	Valeo NEW **813022** Valeo ES OE 5177970-7014, 5177970-7011 SANDEN **TYPE** SD7H15 **CODE** 8157	**Connect/Fitting** **TYPE** A-2 Ø(mm) 132 24 V **TYPE** **QTY**(CC) Valeo	F2000, L2000, M2000 ⓘ+
	Valeo NEW **813023** Valeo ES OE 5010417679 SANDEN **TYPE** SD7H15 **CODE** 8081	**Connect/Fitting** **TYPE** A-2 Ø(mm) 132 24 V **TYPE** **QTY**(CC) Valeo	Midlum, Premium ⓘ+
	Valeo NEW **813025** Valeo ES OE 5010483099 SANDEN **TYPE** SD7H15 **CODE** 8131	**Connect/Fitting** **TYPE** PV-5 Ø(mm) 119 24 V **TYPE** **QTY**(CC) Valeo	Premium ⓘ+

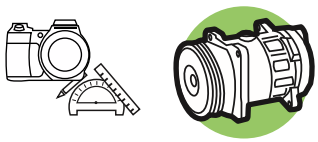

		TECH	
	Valeo NEW 813030	Connect/Fitting	SK
	Valeo ES	TYPE	
	OE 5412300011	Ø(mm)	
	DENSO		
	TYPE 10PA15C	TYPE	
	CODE	QTY(CC)	
		Valeo	

	Valeo NEW 813031	Connect/Fitting	Actros
	Valeo ES	TYPE	
	OE 0002340811	Ø(mm)	
	DENSO		
	TYPE 10PA15C	TYPE	
	CODE	QTY(CC)	
		Valeo	

	Valeo NEW 813032	Connect/Fitting	FL6
	Valeo ES	TYPE	
	OE 1071995	Ø(mm)	
	SANDEN		
	TYPE SD7H15	TYPE	
	CODE	QTY(CC)	
		Valeo	

	Valeo NEW	Connect/Fitting	Astra H,
	Valeo ES 813600	TYPE PV-5	Astra V
	OE 13124749 6854058	Ø(mm) 109	
	DELPHI/HARRISON	12 V	
	TYPE CVC	TYPE PAG	
	CODE 4749	QTY(CC) 150	
		Valeo	

Picture not available Image non disponible Nicht verfügbares Bild Imagen no disponible Immagine non disponibile Zdjęcie niedostępne	Valeo NEW 813101	Connect/Fitting	Astra H,
	Valeo ES 813601	TYPE PV-6	Astra V
	OE 13124751 6854056	Ø(mm) 105	
	DELPHI/HARRISON	12 V	
	TYPE CVC	TYPE PAG150	
	CODE 4751	QTY(CC) 150	
		Valeo	

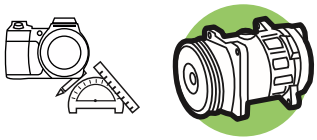

Valeo

		TECH	
	Valeo NEW	Connect/Fitting	Astra H, Astra V, Zafira II
	Valeo ES 813602	TYPE PV-6	
	OE 13124752 6854065	Ø(mm) 109	
	DELPHI/HARRISON	12 V	
	TYPE CVC	TYPE PAG	
	CODE 4752	QTY(CC) 150	
		Valeo	
	Valeo NEW	Connect/Fitting	Zafira II
	Valeo ES 813603	TYPE PV-5	
	OE 13124753 6854078	Ø(mm) 124	
	DELPHI/HARRISON	12 V	
	TYPE CVC	TYPE PAG	
	CODE 4753	QTY(CC) 150	
		Valeo	
	Valeo NEW	Connect/Fitting	Astra H, Astra V
	Valeo ES 813604	TYPE PV-6	
	OE 13124754 6854066	Ø(mm) 109	
	DELPHI/HARRISON	12 V	
	TYPE CVC	TYPE PAG	
	CODE 4754	QTY(CC) 150	
		Valeo	
	Valeo NEW	Connect/Fitting	Astra H, Zafira II
	Valeo ES 813605	TYPE PV-5	
	OE 13139055 6854100	Ø(mm) 109	
	DELPHI/HARRISON	12 V	
	TYPE CVC	TYPE PAG	
	CODE 9055	QTY(CC) 150	
		Valeo	
	Valeo NEW	Connect/Fitting	Escort (90>94), Orion (90>93)
	Valeo ES 813606	TYPE	
	OE 1058282	Ø(mm)	
	VISTEON		
	TYPE FS10	TYPE	
	CODE 10-160-01007	QTY(CC)	
		Valeo	

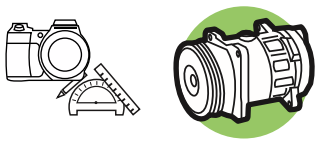

		TECH	
	Valeo NEW 813108	Connect/Fitting O-Ring V	King Cab
	Valeo ES	TYPE A S	
	OE 92600VK200	Ø(mm) 135	
	VALEO/ZEXEL	12 V	
	TYPE DKS17CH	TYPE PAG46	
	CODE 506012-0331	QTY(CC) 200	
		Valeo 699935	i +
	Valeo NEW 813109	Connect/Fitting O-Ring V	King Cab
	Valeo ES	TYPE A S	
	OE 92600VK510	Ø(mm) 135	
	VALEO/ZEXEL	12 V	
	TYPE DKS17CH	TYPE PAG46	
	CODE 506012-0341	QTY(CC) 200	
		Valeo 699935	i +
	Valeo NEW 813110	Connect/Fitting O-Ring V	Terrano III
	Valeo ES	TYPE PV-7	
	OE 92600VK110	Ø(mm) 135	
	VALEO/ZEXEL	12 V	
	TYPE DKS17CH	TYPE PAG46	
	CODE 506012-0390	QTY(CC) 200	
		Valeo 699935	i +
	Valeo NEW 813111	Connect/Fitting O-Ring Special	Murano
	Valeo ES	TYPE PV-6	
	OE 92600CA01A	Ø(mm) 120	
	VALEO/ZEXEL	12 V	
	TYPE DKS17D	TYPE PAG46	
	CODE 506012-2251	QTY(CC) 150	
		Valeo 699935	i +
Picture not available Image non disponible Nicht verfügbares Bild Imagen no disponible Immagine non disponibile Zdjęcie niedostępne	Valeo NEW 813113	Connect/Fitting O-Ring	Micra K12, Note
	Valeo ES	TYPE PK-4	
	OE 92600AX80A	Ø(mm) 120	
	VALEO/ZEXEL	12 V	
	TYPE DKV08R	TYPE PAG100	
	CODE 506021-7430	QTY(CC) 80	
		Valeo 699936	i +

Valeo

		TECH	
	Valeo NEW **813115** Valeo ES OE 926005M301 VALEO/ZEXEL **TYPE** DKV11G **CODE** 506021-5422	**Connect/Fitting** O-Ring **TYPE** A S Ø(mm) 135 12 V **TYPE** PAG100 **QTY**(CC) 180 Valeo **699936**	X-Trail ⓘ+
	Valeo NEW **813117** Valeo ES OE 92600ES60A VALEO/ZEXEL **TYPE** DKV11G **CODE** 506021-7410	**Connect/Fitting** O-Ring **TYPE** A S Ø(mm) 135 12 V **TYPE** PAG100 **QTY**(CC) 180 Valeo **699936**	X-Trail ⓘ+
	Valeo NEW **813121** Valeo ES OE 60693746 VALEO/ZEXEL **TYPE** DCS17IC **CODE** 506041-0065	**Connect/Fitting** Gasket **TYPE** PK-5 + PK-3 Ø(mm) 151+120 12 V **TYPE** PAG46 **QTY**(CC) 150 Valeo **699935**	159, Brera ⓘ+
	Valeo NEW **813122** Valeo ES OE 60693331 VALEO/ZEXEL **TYPE** DCS17IC **CODE** 506041-0076	**Connect/Fitting** Gasket **TYPE** PK-6 Ø(mm) 120 12 V **TYPE** PAG46 **QTY**(CC) 150 Valeo **699935**	159 ⓘ+
	Valeo NEW **813123** Valeo ES OE 60693332 VALEO/ZEXEL **TYPE** DCS17IC **CODE** 506041-0085	**Connect/Fitting** Gasket **TYPE** PK-5 + PK-6 Ø(mm) 120+120 12 V **TYPE** PAG46 **QTY**(CC) 150 Valeo **699935**	159 ⓘ+

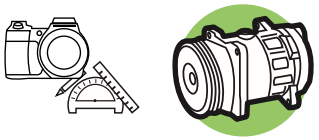

		TECH	
	Valeo NEW **813124** Valeo ES OE 12756725 VALEO/ZEXEL **TYPE** DCS17IC **CODE** 506041-0381	**Connect/Fitting** Gasket **TYPE** PK-6 Ø(mm) 120 12 V **TYPE** PAG46 **QTY**(CC) 150 Valeo **699935**	9-5 (2001>) +
	Valeo NEW **813125** Valeo ES **813625** OE 8200577732 8200577732 VALEO/ZEXEL **TYPE** DCS17IC **CODE** 506041-0531	**Connect/Fitting** **TYPE** PV-7 Ø(mm) 119 12 V **TYPE** PAG46 **QTY**(CC) 210 Valeo **699935**	Espace IV, Vel Satis , Laguna II +
	Valeo NEW Valeo ES **813626** OE 13197538 SANDEN **TYPE** SD6V10 **CODE**	**Connect/Fitting** **TYPE** Ø(mm) **TYPE** **QTY**(CC) Valeo	Combo (2002>) +
Picture not available Image non disponible Nicht verfügbares Bild Imagen no disponible Immagine non disponibile Zdjęcie niedostępne	Valeo NEW Valeo ES **813627** OE 1149431 SANDEN **TYPE** SD7V16 **CODE**	**Connect/Fitting** **TYPE** Ø(mm) **TYPE** **QTY**(CC) Valeo	Galaxy (2000>2006) +
Picture not available Image non disponible Nicht verfügbares Bild Imagen no disponible Immagine non disponibile Zdjęcie niedostępne	Valeo NEW Valeo ES **813628** OE 46405414 SANDEN **TYPE** SD7V16 **CODE**	**Connect/Fitting** **TYPE** Ø(mm) **TYPE** **QTY**(CC) Valeo	Dedra (94>99), Delta (93>99) +

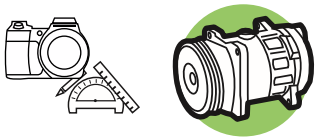

Valeo

		TECH	
Valeo	Valeo NEW 813129	Connect/Fitting	Mascott , Master (2003>)
	Valeo ES	TYPE	
	OE 8200201422	Ø(mm)	
	SANDEN	TYPE	
	TYPE SD7V16	QTY(CC)	
	CODE 1188	Valeo	
Picture not available Image non disponible Nicht verfügbares Bild Imagen no disponible Immagine non disponibile Zdjęcie niedostępne	Valeo NEW	Connect/Fitting	R21 , Espace II (91>96)
	Valeo ES 813630	TYPE	
	OE	Ø(mm)	
	SANDEN	TYPE	
	TYPE SD7H15	QTY(CC)	
	CODE	Valeo	
Picture not available Image non disponible Nicht verfügbares Bild Imagen no disponible Immagine non disponibile Zdjęcie niedostępne	Valeo NEW 813131	Connect/Fitting	Clio III (2005>) , Modus
	Valeo ES 813631	TYPE	
	OE 8200365787	Ø(mm)	
	SANDEN	TYPE	
	TYPE SD6V12	QTY(CC)	
	CODE 1452	Valeo	
Picture not available Image non disponible Nicht verfügbares Bild Imagen no disponible Immagine non disponibile Zdjęcie niedostępne	Valeo NEW 813132	Connect/Fitting	Clio III (2005>) , Twingo (2007>)
	Valeo ES 813632	TYPE	
	OE 8200357173	Ø(mm)	
	SANDEN	TYPE	
	TYPE SD6V12	QTY(CC)	
	CODE 1446	Valeo	
Picture not available Image non disponible Nicht verfügbares Bild Imagen no disponible Immagine non disponibile Zdjęcie niedostępne	Valeo NEW	Connect/Fitting	Laguna II
	Valeo ES 813633	TYPE	
	OE 8200678509	Ø(mm)	
	DELPHI/HARRISON	TYPE	
	TYPE V5	QTY(CC)	
	CODE	Valeo	

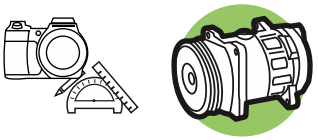

		TECH	
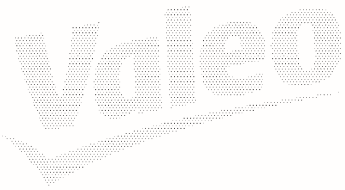	Valeo NEW Valeo ES **813634** OE 8200678507 DELPHI/HARRISON **TYPE** V5 **CODE**	**Connect/Fitting** **TYPE** Ø(mm) **TYPE** **QTY**(CC) Valeo	Laguna II , Vel Satis (2005>) ⓘ+
Picture not available Image non disponible Nicht verfügbares Bild Imagen no disponible Immagine non disponibile Zdjęcie niedostępne	Valeo NEW Valeo ES **813635** OE 8200436108 DELPHI/HARRISON **TYPE** CVC **CODE**	**Connect/Fitting** **TYPE** Ø(mm) **TYPE** **QTY**(CC) Valeo	Espace IV (2002>) ⓘ+
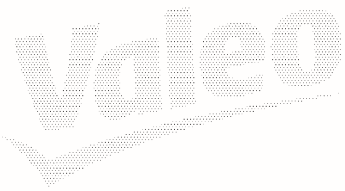	Valeo NEW **813137** Valeo ES **813637** OE 0012305511 VALEO/ZEXEL **TYPE** DCS17E **CODE**	**Connect/Fitting** **TYPE** Ø(mm) **TYPE** **QTY**(CC) Valeo	C Class, CLK ⓘ+
Picture not available Image non disponible Nicht verfügbares Bild Imagen no disponible Immagine non disponibile Zdjęcie niedostępne	Valeo NEW Valeo ES **813638** OE 1321791 SANDEN **TYPE** SD6V12 **CODE**	**Connect/Fitting** **TYPE** Ø(mm) **TYPE** **QTY**(CC) Valeo	Fiesta (2002>), Fusion (2002>2005) ⓘ+
Picture not available Image non disponible Nicht verfügbares Bild Imagen no disponible Immagine non disponibile Zdjęcie niedostępne	Valeo NEW **813140** Valeo ES **813640** OE 36001373 VALEO/ZEXEL **TYPE** DCS17 **CODE**	**Connect/Fitting** **TYPE** PV-3 Ø(mm) 114 12 V **TYPE** PAG46 **QTY**(CC) 150 Valeo **699935**	S60 (2010>) ⓘ+

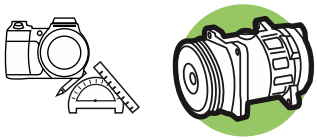

Valeo

		TECH	
Picture not available Image non disponible Nicht verfügbares Bild Imagen no disponible Immagine non disponibile Zdjęcie niedostępne	Valeo NEW **813141** Valeo ES OE 36002423 VALEO/ZEXEL **TYPE** **CODE**	**Connect/Fitting** **TYPE** Ø(mm) **TYPE** **QTY**(CC) Valeo	XC90 (2002>) ⓘ+
Picture not available Image non disponible Nicht verfügbares Bild Imagen no disponible Immagine non disponibile Zdjęcie niedostępne	Valeo NEW **813142** Valeo ES OE 36002422 VALEO/ZEXEL **TYPE** **CODE**	**Connect/Fitting** **TYPE** Ø(mm) **TYPE** **QTY**(CC) Valeo	XC90 (2002>) ⓘ+
Valeo	Valeo NEW **813144** Valeo ES **813644** OE 8200454172 8200454172 VALEO/ZEXEL **TYPE** KC-88 **CODE** 506041-0300 Z0008804	**Connect/Fitting** **TYPE** PV-7 Ø(mm) 119 12 V **TYPE** PAG46 **QTY**(CC) 230 Valeo **699935**	Trafic (2001>) ⓘ+
Valeo	Valeo NEW **813145** Valeo ES **813645** OE 8200561276 8200561276 VALEO/ZEXEL **TYPE** KC-88 **CODE** Z0007224	**Connect/Fitting** **TYPE** PV-7 Ø(mm) 119 12 V **TYPE** PAG46 **QTY**(CC) 150 Valeo **699935**	Laguna III (2007>) ⓘ+
Picture not available Image non disponible Nicht verfügbares Bild Imagen no disponible Immagine non disponibile Zdjęcie niedostępne	Valeo NEW **813147** Valeo ES **813647** OE 8200720417 8200898810 VALEO/ZEXEL **TYPE** KC-88 **CODE** Z0007226	**Connect/Fitting** **TYPE** PV-6 Ø(mm) 125 12 V **TYPE** PAG46 **QTY**(CC) 150 Valeo **699935**	Laguna III (2007>) ⓘ+

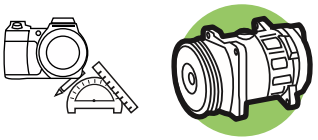

Valeo

		TECH	
Valeo NEW	813149	Connect/Fitting	Laguna III (2007>)
Valeo ES	813649	TYPE PV-6	
OE	8200720780 8200909753	Ø(mm) 119	
	VALEO/ZEXEL	12 V	
TYPE	KC-88	TYPE PAG46	
CODE	Z0007225	QTY(CC) 150	
		Valeo 699935	

Valeo NEW	813150	Connect/Fitting	A4 (2000>2004)
Valeo ES	813650	TYPE PV-6	
OE	8E0260805BF 0002306511	Ø(mm) 100	
	DENSO	12 V	
TYPE	6SEU14C	TYPE PAG46	
CODE	447190-6680	QTY(CC) 130	
		Valeo 699935	

Valeo NEW	813151	Connect/Fitting	3 series E46, 5 series E39
Valeo ES		TYPE PV-6	
OE	64526910458	Ø(mm) 110	
	DENSO	12 V	
TYPE	7SBU16C	TYPE	
CODE	447190-9440	QTY(CC) 160	
		Valeo	

Valeo NEW	813157	Connect/Fitting	C Class, CLK, E Class
Valeo ES	813657	TYPE PV-6	
OE	0002309011 0002306511	Ø(mm) 114,4	
	VALEO/ZEXEL	12 V	
TYPE	DCS17E	TYPE PAG46	
CODE	Z0007512 Z0006496	QTY(CC) 120	
		Valeo 699935	

Valeo NEW	813159	Connect/Fitting Flange V	Lanos
Valeo ES		TYPE	
OE	96255980 6453WX	Ø(mm) 132	
	DELPHI/HARRISON	12 V	
TYPE	V5	TYPE	
CODE	700653	QTY(CC) 265	
		Valeo	

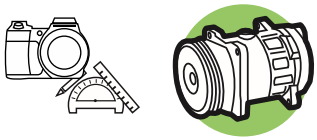

Valeo

		TECH	
	Valeo NEW **813161** Valeo ES OE 6453RV SANDEN **TYPE** SD7C16 **CODE**	**Connect/Fitting** **TYPE** Ø(mm) **TYPE** **QTY**(CC) Valeo	C4 Picasso (2006>) , 307
	Valeo NEW **813162** Valeo ES **813662** OE 6453WK 6453QN SANDEN **TYPE** SD7C16 **CODE** 1309	**Connect/Fitting** **TYPE** PV-6 Ø(mm) 119 12 V **TYPE** PAG46 **QTY**(CC) 135 Valeo **699935**	C3 Picasso
	Valeo NEW **813163** Valeo ES **813663** OE 6453SN 6453WX SANDEN **TYPE** SD7C16 **CODE** 1318	**Connect/Fitting** **TYPE** PV-6 Ø(mm) 119 12 V **TYPE** PAG46 **QTY**(CC) 135 Valeo **699935**	C5 (2004>) , 407
	Valeo NEW **813164** Valeo ES **813664** OE 6453QP 6453QQ SANDEN **TYPE** SD6C12 **CODE** 1350	**Connect/Fitting** **TYPE** PV-6 Ø(mm) 119 12 V **TYPE** PAG46 **QTY**(CC) 135 Valeo **699935**	C4 , 307
	Valeo NEW **813165** Valeo ES **813665** OE 8200651251 7711497298 SANDEN **TYPE** SD6V12 **CODE**	**Connect/Fitting** **TYPE** PV-6 Ø(mm) 125 12 V **TYPE** PAG46 **QTY**(CC) 135 Valeo **699935**	Modus , Twingo (2007>)

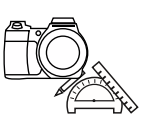

Valeo

		TECH	
Valeo NEW	813166	Connect/Fitting	A4, A6, A8
Valeo ES		TYPE PV-6	
OE	4B0260805B	Ø(mm) 125	
	DENSO	12 V	
TYPE	7SBU16C	TYPE	
CODE	447190-4310	QTY(CC) 245	
		Valeo	

Valeo NEW	813167	Connect/Fitting	Albea
Valeo ES		TYPE PV-5	
OE	46819144	Ø(mm) 100	
	DENSO	12 V	
TYPE	SCSC06C	TYPE	
CODE	447170-0560	QTY(CC) 65	
		Valeo	

Valeo NEW	813168	Connect/Fitting	Civic
Valeo ES		TYPE	
OE	38810PLC006	Ø(mm)	
	SANDEN		
TYPE	TRS090	TYPE	
CODE	3654	QTY(CC)	
		Valeo	

Valeo NEW	813169	Connect/Fitting	Accent, Lantra, Pony
Valeo ES		TYPE	
OE	9770125000	Ø(mm)	
	HCC		
TYPE	HS-15	TYPE	
CODE		QTY(CC)	
		Valeo	

Valeo NEW	813170	Connect/Fitting	Accent
Valeo ES		TYPE	
OE	9770129510 9770122261	Ø(mm)	
	HCC		
TYPE	HCC	TYPE	
CODE		QTY(CC)	
		Valeo	

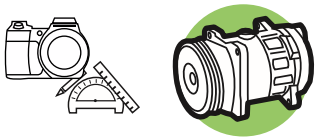

Valeo

		TECH	
	Valeo NEW **813171** Valeo ES OE 46782669 DENSO **TYPE** SCSB06C **CODE** **447100-1870**	**Connect/Fitting** **TYPE** PV-4 Ø(mm) 93 12 V **TYPE** **QTY**(CC) 50 Valeo	Idea, Panda ⓘ+
	Valeo NEW **813173** Valeo ES OE 0002303711 DENSO **TYPE** 10P15C **CODE** **447100-8630**	**Connect/Fitting** **TYPE** PV-6 Ø(mm) 126 12 V **TYPE** **QTY**(CC) 145 Valeo	Vito ⓘ+
	Valeo NEW **813175** Valeo ES OE GJ6A61K00C VALEO/ZEXEL **TYPE** DCS17 **CODE** **Z0011448**	**Connect/Fitting** **TYPE** PV-6 Ø(mm) 138 12 V **TYPE** PAG46 **QTY**(CC) 120 Valeo **699935**	Mazda 6 ⓘ+
	Valeo NEW Valeo ES **813682** OE 6854082 SANDEN **TYPE** SD7V16 **CODE**	**Connect/Fitting** **TYPE** Ø(mm) **TYPE** **QTY**(CC) Valeo	Vectra ⓘ+
	Valeo NEW Valeo ES **813685** OE 6854085 SANDEN **TYPE** SD7V16 **CODE**	**Connect/Fitting** **TYPE** Ø(mm) **TYPE** **QTY**(CC) Valeo	Signum ⓘ+

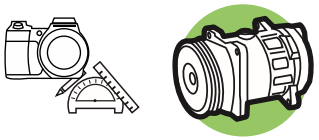

		TECH	
Picture not available Image non disponible Nicht verfügbares Bild Imagen no disponible Immagine non disponibile Zdjęcie niedostępne	Valeo NEW Valeo ES 813686 OE 6854084 TYPE PXV16 CODE	Connect/Fitting TYPE Ø(mm) TYPE QTY(CC) Valeo	9-3, Vectra +
Picture not available Image non disponible Nicht verfügbares Bild Imagen no disponible Immagine non disponibile Zdjęcie niedostępne	Valeo NEW Valeo ES 813688 OE 6854083 DELPHI/HARRISON TYPE V5 CODE	Connect/Fitting TYPE Ø(mm) TYPE QTY(CC) Valeo	Signum, Vectra +
Valeo	Valeo NEW Valeo ES 813689 OE 6453LF 6453LH SANDEN TYPE SD6V12 CODE 1438	Connect/Fitting TYPE Ø(mm) TYPE QTY(CC) Valeo	C2 , C3 + Valeo Matching Quality
Picture not available Image non disponible Nicht verfügbares Bild Imagen no disponible Immagine non disponibile Zdjęcie niedostępne	Valeo NEW 813190 Valeo ES 813690 OE 8E0260805G TYPE 6SEU12C CODE	Connect/Fitting TYPE PV-4 Ø(mm) 110 12 V TYPE PAG46 QTY(CC) 180 Valeo 699935	A4 (2000>2004) +
Valeo	Valeo NEW 813194 Valeo ES OE 64526917859 DENSO TYPE 7SEU17C CODE	Connect/Fitting TYPE Ø(mm) TYPE QTY(CC) Valeo	5 series E60 +

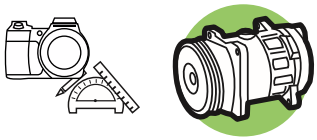

Valeo

		TECH	
	Valeo NEW **813195** Valeo ES **813695** OE 0002309111 / 0012301011 DENSO **TYPE** 7SEU17C **CODE**	**Connect/Fitting** **TYPE** PV-6 Ø(mm) 100 12 V **TYPE** PAG46 **QTY**(CC) 180 Valeo **699935**	CLK (209)
	Valeo NEW **813196** Valeo ES OE 0012303611 DENSO **TYPE** 6SEU16C **CODE**	**Connect/Fitting** **TYPE** Ø(mm) **TYPE** **QTY**(CC) Valeo	A Class (169), B Class
	Valeo NEW **813197** Valeo ES OE 55194880 **TYPE** 5SL12C **CODE**	**Connect/Fitting** **TYPE** Ø(mm) **TYPE** **QTY**(CC) Valeo	Linea (2007>), Grande Punto
	Valeo NEW **813198** Valeo ES OE 8200802609 SANDEN **TYPE** SD7V16 **CODE**	**Connect/Fitting** **TYPE** Ø(mm) **TYPE** **QTY**(CC) Valeo	Logan
	Valeo NEW **813200** Valeo ES **813700** OE 1J0820805/A/F / 1J0820803K SANDEN **TYPE** SD7V16 **CODE** **1206, 1215 / 1226, 1233**	**Connect/Fitting** Flange H **TYPE** PV-6 Ø(mm) 119,5 12 V **TYPE** PAG46 **QTY**(CC) 135 Valeo **699935**	A3,Galaxy, Bora Valeo Matching Quality

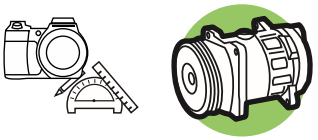

		TECH	
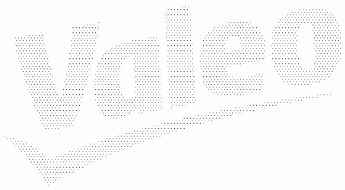	Valeo NEW **813203** Valeo ES OE 1234257 SANDEN **TYPE** SD7V16 **CODE**	**Connect/Fitting** Flange V **TYPE** PV-5 Ø(mm) 110 12 V **TYPE** PAG46 **QTY**(CC) 200 Valeo **699935**	Focus C-MAX ⓘ+
Picture not available Image non disponible Nicht verfügbares Bild Imagen no disponible Immagine non disponibile Zdjęcie niedostępne	Valeo NEW Valeo ES **813705** OE 7711368037 **TYPE** V5 **CODE**	**Connect/Fitting** **TYPE** PV-7 Ø(mm) 123 12 V **TYPE** PAG150 **QTY**(CC) 265 Valeo	Mégane II ⓘ+
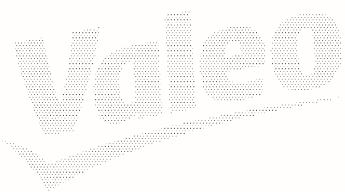	Valeo NEW Valeo ES **813712** OE 6453WV SANDEN **TYPE** SD7C16 **CODE** 1301	**Connect/Fitting** **TYPE** PV-6 Ø(mm) 119 12 V **TYPE** PAG46 **QTY**(CC) 135 Valeo **699935**	407 ⓘ+
	Valeo NEW Valeo ES **813713** OE 6453RS SANDEN **TYPE** SD7C16 **CODE** 1305	**Connect/Fitting** **TYPE** PV-6 Ø(mm) 119 12 V **TYPE** PAG46 **QTY**(CC) 135 Valeo **699935**	C5 (2004>2007) ⓘ+
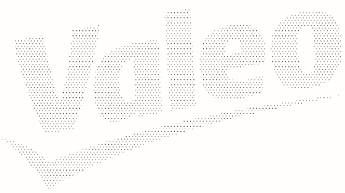	Valeo NEW Valeo ES **813714** OE 6453RW SANDEN **TYPE** SD7C16 **CODE** 1308	**Connect/Fitting** **TYPE** PV-6 Ø(mm) 119 12 V **TYPE** PAG46 **QTY**(CC) 135 Valeo **699935**	307 (2005>) ⓘ+

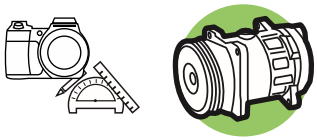

Valeo

		TECH	
	Valeo NEW	Connect/Fitting	407
	Valeo ES **813715**	TYPE PV-6	
	OE 6453VJ	Ø(mm) 120	
	SANDEN	12 V	
	TYPE SD7C16	TYPE PAG46	
	CODE 1312	QTY(CC) 135	
		Valeo 699935	
	Valeo NEW	Connect/Fitting	C4 Picasso (2006>)
	Valeo ES **813716**	TYPE PV-6	
	OE 6453TN	Ø(mm) 119	
	SANDEN	12 V	
	TYPE SD7C16	TYPE PAG46	
	CODE 1315	QTY(CC) 135	
		Valeo 699935	
	Valeo NEW	Connect/Fitting	C4 Picasso (2006>)
	Valeo ES **813717**	TYPE PV-6	
	OE 6453YF	Ø(mm) 119	
	SANDEN	12 V	
	TYPE SD7C16	TYPE PAG46	
	CODE 1316	QTY(CC) 135	
		Valeo 699935	
	Valeo NEW	Connect/Fitting	407
	Valeo ES **813718**	TYPE PV-6	
	OE 6453WZ	Ø(mm) 119	
	SANDEN	12 V	
	TYPE SD7C16	TYPE PAG46	
	CODE 1317	QTY(CC) 135	
		Valeo 699935	
	Valeo NEW	Connect/Fitting	C4
	Valeo ES **813719**	TYPE PV-6	
	OE 6453XN	Ø(mm) 119	
	SANDEN	12 V	
	TYPE SD7C16	TYPE PAG46	
	CODE 1330	QTY(CC) 135	
		Valeo 699935	

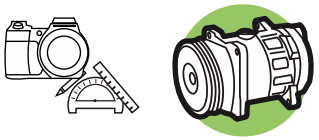

		TECH	
	Valeo NEW **813220** Valeo ES OE 9642800780 SANDEN **TYPE** SD7V16 **CODE**	**Connect/Fitting** **TYPE** Ø(mm) **TYPE** **QTY**(CC) Valeo	Laguna II ⓘ+
	Valeo NEW **813222** Valeo ES OE 8200678499 SANDEN **TYPE** CVC5 **CODE**	**Connect/Fitting** **TYPE** Ø(mm) **TYPE** **QTY**(CC) Valeo	Mégane II, Scénic II ⓘ+
Picture not available Image non disponible Nicht verfügbares Bild Imagen no disponible Immagine non disponibile Zdjęcie niedostępne	Valeo NEW **813223** Valeo ES **813723** OE 648708 6453WL SANDEN **TYPE** SD6C12 **CODE** 1355	**Connect/Fitting** **TYPE** PV-6 Ø(mm) 119 12 V **TYPE** PAG46 **QTY**(CC) 135 Valeo **699935**	C5 (2008>) ⓘ+
Picture not available Image non disponible Nicht verfügbares Bild Imagen no disponible Immagine non disponibile Zdjęcie niedostępne	Valeo NEW **813225** Valeo ES **813725** OE 6453RF 6453YY SANDEN **TYPE** SD7C16 **CODE** 1333	**Connect/Fitting** **TYPE** PV-6 Ø(mm) 119 12 V **TYPE** PAG46 **QTY**(CC) 135 Valeo **699935**	C5 (2008>) ⓘ+
Picture not available Image non disponible Nicht verfügbares Bild Imagen no disponible Immagine non disponibile Zdjęcie niedostępne	Valeo NEW Valeo ES **813726** OE 6453XC SANDEN **TYPE** SD6C12 **CODE** 1332	**Connect/Fitting** **TYPE** PV-6 Ø(mm) 119 12 V **TYPE** PAG46 **QTY**(CC) 135 Valeo **699935**	C3 Picasso ⓘ+

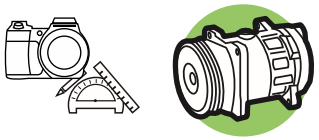

Valeo

		TECH	
Picture not available Image non disponible Nicht verfügbares Bild Imagen no disponible Immagine non disponibile Zdjęcie niedostępne	Valeo NEW Valeo ES **813729** OE 8200470242 SANDEN **TYPE** SD7C16 **CODE**	**Connect/Fitting** **TYPE** Ø(mm) **TYPE** **QTY**(CC) Valeo	C4 ⓘ+
Picture not available Image non disponible Nicht verfügbares Bild Imagen no disponible Immagine non disponibile Zdjęcie niedostępne	Valeo NEW Valeo ES **813730** OE 1490495 SANDEN **TYPE** SD7C16 **CODE**	**Connect/Fitting** **TYPE** Ø(mm) **TYPE** **QTY**(CC) Valeo	C5 (2008>) ⓘ+
Picture not available Image non disponible Nicht verfügbares Bild Imagen no disponible Immagine non disponibile Zdjęcie niedostępne	Valeo NEW Valeo ES **813731** OE 1677171 SANDEN **TYPE** SD6C12 **CODE**	**Connect/Fitting** **TYPE** Ø(mm) **TYPE** **QTY**(CC) Valeo	C4 ⓘ+
Picture not available Image non disponible Nicht verfügbares Bild Imagen no disponible Immagine non disponibile Zdjęcie niedostępne	Valeo NEW Valeo ES **813733** OE 1438877 VISTEON **TYPE** VS16 **CODE**	**Connect/Fitting** **TYPE** PV-5 Ø(mm) 117 12 V **TYPE** **QTY**(CC) 200 Valeo	Focus (2004>) ⓘ+
Picture not available Image non disponible Nicht verfügbares Bild Imagen no disponible Immagine non disponibile Zdjęcie niedostępne	Valeo NEW Valeo ES **813734** OE 1437620 VISTEON **TYPE** VS16 **CODE** 3M5H KG	**Connect/Fitting** **TYPE** PV-6 Ø(mm) 126 12 V **TYPE** PAG **QTY**(CC) 200 Valeo	Focus (2004>) ⓘ+

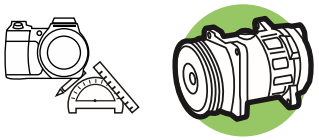

		TECH	
Picture not available Image non disponible Nicht verfügbares Bild Imagen no disponible Immagine non disponibile Zdjęcie niedostępne	Valeo NEW Valeo ES **813735** OE 1731790 VISTEON **TYPE** VS16 **CODE** **3M5H PJ**	**Connect/Fitting** **TYPE** PV-5 Ø(mm) 117 12 V **TYPE** PAG **QTY**(CC) 200 Valeo	Focus (2004>) ⓘ+
Picture not available Image non disponible Nicht verfügbares Bild Imagen no disponible Immagine non disponibile Zdjęcie niedostępne	Valeo NEW Valeo ES **813736** OE 1674615 VISTEON **TYPE** VS16 **CODE** **4M5H AF**	**Connect/Fitting** **TYPE** PV-6 Ø(mm) 12 V **TYPE** PAG **QTY**(CC) 200 Valeo	Focus (2004>) ⓘ+
Valeo	Valeo NEW Valeo ES **813737** OE 1421334 VISTEON **TYPE** VS16 **CODE** **3M5H DG**	**Connect/Fitting** **TYPE** PV-6 Ø(mm) 126 12 V **TYPE** PAG **QTY**(CC) 200 Valeo	Focus (2004>) ⓘ+
Picture not available Image non disponible Nicht verfügbares Bild Imagen no disponible Immagine non disponibile Zdjęcie niedostępne	Valeo NEW Valeo ES **813738** OE 1444893 VISTEON **TYPE** VS16 **CODE** **6G91 KD**	**Connect/Fitting** **TYPE** PV-6 Ø(mm) 117 12 V **TYPE** PAG **QTY**(CC) 200 Valeo	Galaxy (2006>2010) ⓘ+
Picture not available Image non disponible Nicht verfügbares Bild Imagen no disponible Immagine non disponibile Zdjęcie niedostępne	Valeo NEW Valeo ES **813739** OE 1674615 VISTEON **TYPE** VS16 **CODE** **6G91 DE**	**Connect/Fitting** **TYPE** PV-6 Ø(mm) 117 12 V **TYPE** PAG **QTY**(CC) 200 Valeo	Galaxy (2006>2010) ⓘ+

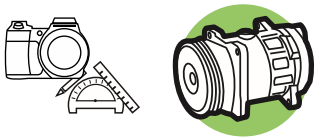

Valeo

		TECH	
Picture not available Image non disponible Nicht verfügbares Bild Imagen no disponible Immagine non disponibile Zdjęcie niedostępne	Valeo NEW Valeo ES **813740** OE 1421334 VISTEON **TYPE** VS16 **CODE** **6C11 AD**	**Connect/Fitting** **TYPE** PV-6 Ø(mm) 135 12 V **TYPE** PAG **QTY**(CC) 200 Valeo	Transit (2006>) ⓘ+
Picture not available Image non disponible Nicht verfügbares Bild Imagen no disponible Immagine non disponibile Zdjęcie niedostępne	Valeo NEW Valeo ES **813741** OE 1444893 VISTEON **TYPE** VS16 **CODE** **6C11 BE**	**Connect/Fitting** **TYPE** PV-7 Ø(mm) 135 12 V **TYPE** PAG **QTY**(CC) 200 Valeo	Transit (2006>) ⓘ+
Picture not available Image non disponible Nicht verfügbares Bild Imagen no disponible Immagine non disponibile Zdjęcie niedostępne	Valeo NEW Valeo ES **813749** OE 648709 **TYPE** SD6C12 **CODE**	**Connect/Fitting** **TYPE** PV-6 Ø(mm) 119 12 V **TYPE** **QTY**(CC) 135 Valeo	208 ⓘ+
Valeo	Valeo NEW **813255** Valeo ES OE 60693333 VALEO/ZEXEL **TYPE** DCS17 **CODE** **Z0006836**	**Connect/Fitting** **TYPE** PV-6 Ø(mm) 139 12 V **TYPE** PAG46 **QTY**(CC) 150 Valeo **699935**	159 (2005>2008) ⓘ+
Valeo	Valeo NEW **813256** Valeo ES OE 926009154R VALEO/ZEXEL **TYPE** DKV11 **CODE** **Z0011175**	**Connect/Fitting** **TYPE** PV-6 Ø(mm) 129 12 V **TYPE** PAG100 **QTY**(CC) 80 Valeo **699936**	Duster ⓘ+

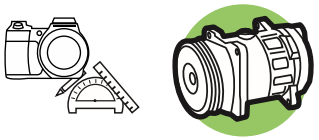

		TECH	
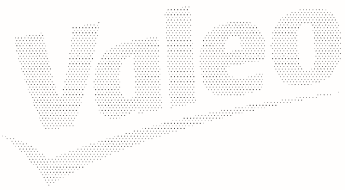	Valeo NEW **813258** Valeo ES OE 0022304511 VALEO/ZEXEL **TYPE** DCS17 **CODE** Z0006615	**Connect/Fitting** **TYPE** PV-6 Ø(mm) 114 12 V **TYPE** PAG46 **QTY**(CC) 120 Valeo **699935**	C Class (204) (2007>) +
Picture not available Image non disponible Nicht verfügbares Bild Imagen no disponible Immagine non disponibile Zdjęcie niedostępne	Valeo NEW **813262** Valeo ES OE 926001DE0A VALEO/ZEXEL **TYPE** DCS17 **CODE** Z0005307	**Connect/Fitting** **TYPE** PV-7 Ø(mm) 119 12 V **TYPE** PAG46 **QTY**(CC) 150 Valeo **699935**	Qashqai (2007>2010) +
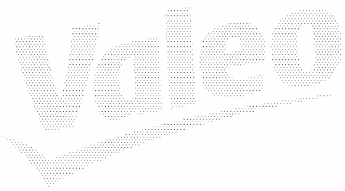	Valeo NEW **813263** Valeo ES **813763** OE 8200869742 VALEO/ZEXEL **TYPE** DCS17 **CODE** Z0006203	**Connect/Fitting** **TYPE** PV-6 Ø(mm) 119 12 V **TYPE** PAG46 **QTY**(CC) 120 Valeo **699935**	Mégane III (2008>) +
	Valeo NEW **813264** Valeo ES **813764** OE 8200835879 VALEO/ZEXEL **TYPE** DCS17 **CODE** Z0006688	**Connect/Fitting** **TYPE** PV-6 Ø(mm) 119 12 V **TYPE** PAG46 **QTY**(CC) 120 Valeo **699935**	Latitude +
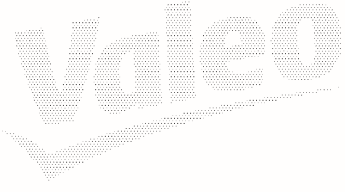	Valeo NEW **813265** Valeo ES **813765** OE 8200848916 VALEO/ZEXEL **TYPE** DCS17 **CODE** Z0008944	**Connect/Fitting** **TYPE** PV-7 Ø(mm) 119 12 V **TYPE** PAG46 **QTY**(CC) 120 Valeo **699935**	Latitude +

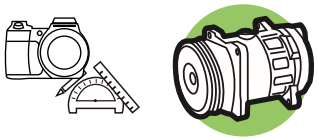

Valeo

		TECH	
	Valeo NEW **813268** Valeo ES OE 9520064JB01 VALEO/ZEXEL **TYPE** DCS14 **CODE** Z0004086	**Connect/Fitting** **TYPE** PV-5 Ø(mm) 114 12 V **TYPE** PAG46 **QTY**(CC) 150 Valeo **699935**	Grand Vitara (YT4) ⓘ+
Picture not available Image non disponible Nicht verfügbares Bild Imagen no disponible Immagine non disponibile Zdjęcie niedostępne	Valeo NEW **813269** Valeo ES **813769** OE 9520167JA0 VALEO/ZEXEL **TYPE** DCS17 **CODE** Z0012052	**Connect/Fitting** **TYPE** PV-7 Ø(mm) 114 12 V **TYPE** PAG46 **QTY**(CC) 150 Valeo **699935**	Grand Vitara (YT4) ⓘ+
	Valeo NEW **813270** Valeo ES OE 31305837 VALEO/ZEXEL **TYPE** DCS17 **CODE** Z0002812	**Connect/Fitting** **TYPE** PV-6 Ø(mm) 115 12 V **TYPE** PAG46 **QTY**(CC) 230 Valeo **699935**	S80 (2006>) ⓘ+
	Valeo NEW **813271** Valeo ES OE 36002424 VALEO/ZEXEL **TYPE** DCS17 **CODE** Z0002280	**Connect/Fitting** **TYPE** PV-6 Ø(mm) 134 12 V **TYPE** PAG46 **QTY**(CC) 150 Valeo **699935**	V70 (2007>) ⓘ+
	Valeo NEW Valeo ES **813804** OE 6453NJ SANDEN **TYPE** SD7V16 **CODE** 1243	**Connect/Fitting** **TYPE** PV-6 Ø(mm) 124 12 V **TYPE** PAG46 **QTY**(CC) 135 Valeo **699935**	C5 (2001>2004) ⓘ+

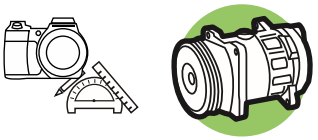

		TECH	
	Valeo NEW	Connect/Fitting	Xsara Picasso
	Valeo ES 813806	TYPE PV-6	
	OE 6453KZ	Ø(mm) 119	
	SANDEN	12 V	
	TYPE SD7V16	TYPE PAG46	
	CODE 1238	QTY(CC) 200	
		Valeo 699935	i +

	Valeo NEW	Connect/Fitting	Jumper (94>2001)
	Valeo ES 813808	TYPE PV-5	
	OE 6453NR	Ø(mm) 117	
	SANDEN	12 V	
	TYPE SD7H15	TYPE PAG100	
	CODE 7882	QTY(CC) 135	
		Valeo 699936	i +

	Valeo NEW	Connect/Fitting	C2
	Valeo ES 813809	TYPE PV-6	
	OE 6453QH	Ø(mm) 119	
	SANDEN	12 V	
	TYPE SD6V12	TYPE PAG46	
	CODE 1450	QTY(CC) 135	
		Valeo 699935	i +

	Valeo NEW	Connect/Fitting	Dispatch (2004>2006)
	Valeo ES 813810	TYPE PV-6	
	OE 6453QW	Ø(mm) 119	
	SANDEN	12 V	
	TYPE SD7V16	TYPE PAG46	
	CODE 1259	QTY(CC) 135	
		Valeo 699935	i +

	Valeo NEW	Connect/Fitting	C8
	Valeo ES 813811	TYPE PV-6	
	OE 6453TC	Ø(mm) 119	
	SANDEN	12 V	
	TYPE SD7V16	TYPE PAG46	
	CODE 1270	QTY(CC) 135	
		Valeo 699935	i +

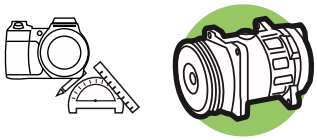

		TECH	
	Valeo NEW	Connect/Fitting	Xsara (2000>)
	Valeo ES **813812**	TYPE PV-6	
	OE 6453TH	Ø(mm) 119	
	SANDEN	12 V	
	TYPE SD7V16	TYPE PAG46	
	CODE 1242	QTY(CC) 135	
		Valeo 699935	
	Valeo NEW	Connect/Fitting	Dispatch (2007>)
	Valeo ES **813813**	TYPE PV-6	
	OE 6453VC	Ø(mm) 119	
	SANDEN	12 V	
	TYPE SD7V16	TYPE PAG46	
	CODE 1276	QTY(CC) 135	
		Valeo 699935	
	Valeo NEW	Connect/Fitting	Xsara (2000>)
	Valeo ES **813814**	TYPE PV-6	
	OE 6453JJ	Ø(mm) 119	
	SANDEN	12 V	
	TYPE SD7V12	TYPE PAG46	
	CODE 1433	QTY(CC) 135	
		Valeo 699935	
Picture not available Image non disponible Nicht verfügbares Bild Imagen no disponible Immagine non disponibile Zdjęcie niedostępne	Valeo NEW	Connect/Fitting	C5 (2001>2004)
	Valeo ES **813815**	TYPE PV-6	
	OE 6453LY	Ø(mm) 121	
	DELPHI/HARRISON	12 V	
	TYPE V51135	TYPE PAG46	
	CODE 1135512	QTY(CC) 135	
		Valeo 699935	
	Valeo NEW	Connect/Fitting	406 (99>)
	Valeo ES **813816**	TYPE PV-6	
	OE 6453NC	Ø(mm) 121	
	DELPHI/HARRISON	12 V	
	TYPE V51135	TYPE PAG46	
	CODE 1135463	QTY(CC) 235	
		Valeo 699935	

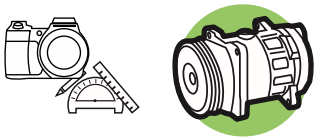

		TECH	
Picture not available Image non disponible Nicht verfügbares Bild Imagen no disponible Immagine non disponibile Zdjęcie niedostępne	Valeo NEW **813317** Valeo ES **813817** OE 648722 6453XK SANDEN **TYPE** SD7V12 **CODE** **1908**	**Connect/Fitting** **TYPE** PV-6 Ø(mm) 119 12 V **TYPE** PAG46 **QTY**(CC) 135 Valeo **699935**	C2 ⓘ+
Valeo	Valeo NEW Valeo ES **813818** OE 6453XQ SANDEN **TYPE** SD7V12 **CODE** **1907**	**Connect/Fitting** **TYPE** PV-6 Ø(mm) 119 12 V **TYPE** PAG46 **QTY**(CC) 135 Valeo **699935**	206, Xsara Picasso ⓘ+
Valeo	Valeo NEW Valeo ES **813820** OE 6453YK SANDEN **TYPE** SD7V16 **CODE** **1802**	**Connect/Fitting** **TYPE** PV-6 Ø(mm) 119 12 V **TYPE** PAG46 **QTY**(CC) 135 Valeo **699935**	C5 (2001>2004) ⓘ+
Picture not available Image non disponible Nicht verfügbares Bild Imagen no disponible Immagine non disponibile Zdjęcie niedostępne	Valeo NEW **813322** Valeo ES OE 6453YX SANDEN **TYPE** SD7V16 **CODE** **1803**	**Connect/Fitting** **TYPE** PV-6 Ø(mm) 119 12 V **TYPE** PAG46 **QTY**(CC) 135 Valeo **699935**	C8 ⓘ+
Picture not available Image non disponible Nicht verfügbares Bild Imagen no disponible Immagine non disponibile Zdjęcie niedostępne	Valeo NEW **813323** Valeo ES OE 36000570 **TYPE** DKS15D **CODE**	**Connect/Fitting** **TYPE** PV-5 Ø(mm) 125 12 V **TYPE** PAG46 **QTY**(CC) 200 Valeo **699935**	C30 ⓘ+

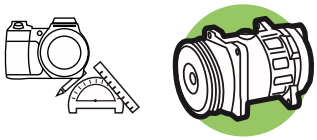

		TECH	
	Valeo NEW	Connect/Fitting	Xsara (2000>)
	Valeo ES 813824	TYPE PV-6	
	OE 6453QF	Ø(mm) 119	
	SANDEN	12 V	
	TYPE SD7V12	TYPE PAG46	
	CODE 1449	QTY(CC) 135	
		Valeo 699935	
Picture not available Image non disponible Nicht verfügbares Bild Imagen no disponible Immagine non disponibile Zdjęcie niedostępne	Valeo NEW	Connect/Fitting	Mégane II (2002>)
	Valeo ES 813825	TYPE PV-7	
	OE 7711497517	Ø(mm) 122	
	DELPHI/HARRISON	12 V	
	TYPE CVC085	TYPE PAG46	
	CODE 855	QTY(CC) 150	
		Valeo 699935	
	Valeo NEW	Connect/Fitting	Clio III FL (2009>)
	Valeo ES 813826	TYPE PV-7	
	OE 7711497516	Ø(mm) 122	
	DELPHI/HARRISON	12 V	
	TYPE CVC085	TYPE PAG46	
	CODE 856	QTY(CC) 150	
		Valeo 699935	
	Valeo NEW	Connect/Fitting	Logan
	Valeo ES 813827	TYPE PV-6	
	OE 7711497531	Ø(mm) 125	
	SANDEN	12 V	
	TYPE SD7V16	TYPE PAG46	
	CODE 1069	QTY(CC) 135	
		Valeo 699935	
Picture not available Image non disponible Nicht verfügbares Bild Imagen no disponible Immagine non disponibile Zdjęcie niedostępne	Valeo NEW	Connect/Fitting	Mégane II (2002>)
	Valeo ES 813828	TYPE PV-6	
	OE 8200470242	Ø(mm) 122	
	DELPHI/HARRISON	12 V	
	TYPE CVC016	TYPE PAG46	
	CODE 169	QTY(CC) 150	
		Valeo 699935	

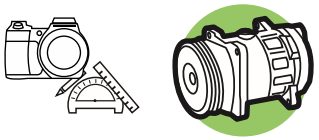

		TECH	
Picture not available Image non disponible Nicht verfügbares Bild Imagen no disponible Immagine non disponibile Zdjęcie niedostępne	Valeo NEW Valeo ES **813829** OE 7H0820805E DENSO **TYPE** 7SEU **CODE**	**Connect/Fitting** **TYPE** Ø(mm) 12 V **TYPE** PAG46 **QTY**(CC) 200 Valeo **699935**	Phaeton (2002>2007) ⓘ+
Picture not available Image non disponible Nicht verfügbares Bild Imagen no disponible Immagine non disponibile Zdjęcie niedostępne	Valeo NEW Valeo ES **813831** OE 4677144AB **TYPE** 10PA17C **CODE**	**Connect/Fitting** **TYPE** PV-6 Ø(mm) 125 12 V **TYPE** PAG46 **QTY**(CC) 180 Valeo **699935**	Voyager (96>2001) ⓘ+
Picture not available Image non disponible Nicht verfügbares Bild Imagen no disponible Immagine non disponibile Zdjęcie niedostępne	Valeo NEW Valeo ES **813832** OE JPB000040A **TYPE** 7SB16C **CODE**	**Connect/Fitting** **TYPE** PV-5 Ø(mm) 126 12 V **TYPE** PAG46 **QTY**(CC) 120 Valeo **699935**	Freelander ⓘ+
Picture not available Image non disponible Nicht verfügbares Bild Imagen no disponible Immagine non disponibile Zdjęcie niedostępne	Valeo NEW Valeo ES **813833** OE 64526916232 **TYPE** 7SBU16C **CODE**	**Connect/Fitting** **TYPE** PV-5 Ø(mm) 110 12 V **TYPE** PAG46 **QTY**(CC) 160 Valeo **699935**	3 series E46 ⓘ+
Picture not available Image non disponible Nicht verfügbares Bild Imagen no disponible Immagine non disponibile Zdjęcie niedostępne	Valeo NEW Valeo ES **813834** OE 926009F510 **TYPE** CVC **CODE**	**Connect/Fitting** **TYPE** PV-6 Ø(mm) 139 12 V **TYPE** PAG46 **QTY**(CC) 180 Valeo **699935**	Almera (2000>2006) ⓘ+

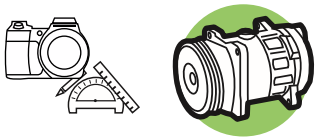

Valeo

		TECH	
Picture not available Image non disponible Nicht verfügbares Bild Imagen no disponible Immagine non disponibile Zdjęcie niedostępne	Valeo NEW Valeo ES 813835 OE 8K0260805L TYPE 6SEU14C CODE	Connect/Fitting TYPE PV-6 Ø(mm) 100 12 V TYPE PAG46 QTY(CC) 130 Valeo 699935	A4 (2007>) ⓘ+
Picture not available Image non disponible Nicht verfügbares Bild Imagen no disponible Immagine non disponibile Zdjęcie niedostępne	Valeo NEW Valeo ES 813836 OE 4B0260805J TYPE 6SEU12C CODE	Connect/Fitting TYPE PV-4 Ø(mm) 110 12 V TYPE PAG46 QTY(CC) 180 Valeo 699935	A6 (2001>2004) ⓘ+
Picture not available Image non disponible Nicht verfügbares Bild Imagen no disponible Immagine non disponibile Zdjęcie niedostępne	Valeo NEW Valeo ES 813837 OE 8E0260805AF TYPE 6SEU12C CODE	Connect/Fitting TYPE PV-6 Ø(mm) 110 12 V TYPE PAG46 QTY(CC) 180 Valeo 699935	A4 (2000>2004) ⓘ+
Picture not available Image non disponible Nicht verfügbares Bild Imagen no disponible Immagine non disponibile Zdjęcie niedostępne	Valeo NEW Valeo ES 813838 OE 8J0260805 TYPE 6SEU14C CODE	Connect/Fitting TYPE PV-6 Ø(mm) 110 12 V TYPE PAG46 QTY(CC) 80 Valeo 699935	A1 (2010>) ⓘ+
Picture not available Image non disponible Nicht verfügbares Bild Imagen no disponible Immagine non disponibile Zdjęcie niedostępne	Valeo NEW 813339 Valeo ES OE 926007877R TYPE DKS17D CODE	Connect/Fitting TYPE PV-7 Ø(mm) 115 12 V TYPE PAG46 QTY(CC) 120 Valeo 699935	Koleos ⓘ+

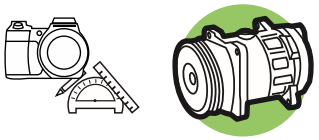

		TECH	
Picture not available Image non disponible Nicht verfügbares Bild Imagen no disponible Immagine non disponibile Zdjęcie niedostępne	Valeo NEW Valeo ES 813842 OE 883202B400 TYPE 10PA15C CODE	Connect/Fitting TYPE Ø(mm) 146 12 V TYPE PAG46 QTY(CC) 180 Valeo 699935	Avensis (97>2000) +
Picture not available Image non disponible Nicht verfügbares Bild Imagen no disponible Immagine non disponibile Zdjęcie niedostępne	Valeo NEW 813343 Valeo ES OE 92600CJ700 TYPE DKV08R CODE	Connect/Fitting TYPE PV-6 Ø(mm) 110 12 V TYPE PAG46 QTY(CC) 80 Valeo 699935	Micra (K12) +
Picture not available Image non disponible Nicht verfügbares Bild Imagen no disponible Immagine non disponibile Zdjęcie niedostępne	Valeo NEW 813350 Valeo ES OE 977011C100 TYPE CODE	Connect/Fitting TYPE PV-5 Ø(mm) 112 12 TYPE PAG46 QTY(CC) 150 Valeo	Getz (2002>) +
Valeo	Valeo NEW 813353 Valeo ES OE 977011C250 HALLA TYPE HS-15 CODE	Connect/Fitting TYPE PV-4 Ø(mm) 135 12 V TYPE PAG46 QTY(CC) 120 Valeo	Getz (2002>2005) +
Valeo	Valeo NEW 813356 Valeo ES OE 977012H000 HALLA TYPE VS-14 CODE	Connect/Fitting TYPE PV-6 Ø(mm) 125 12 V TYPE PAG46 QTY(CC) 150 Valeo	i30, Ceed +

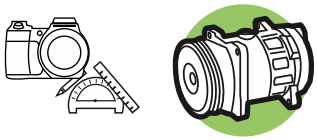

Valeo

		TECH	
	Valeo NEW **813357** Valeo ES OE 977012E000 HALLA **TYPE** HS-15 **CODE**	**Connect/Fitting** **TYPE** PV-4 Ø(mm) 125 12 V **TYPE** PAG46 **QTY**(CC) 150 Valeo	Tucson (2004>), Sportage ⓘ+
	Valeo NEW **813358** Valeo ES OE 977011C600 HALLA **TYPE** HS-15 **CODE**	**Connect/Fitting** **TYPE** PV-5 Ø(mm) 125 12 V **TYPE** PAG46 **QTY**(CC) 150 Valeo	Getz (2005>2006) ⓘ+
	Valeo NEW **813359** Valeo ES OE 977012H200 HALLA **TYPE** VS-14 **CODE**	**Connect/Fitting** **TYPE** PV-5 Ø(mm) 123 12 V **TYPE** PAG46 **QTY**(CC) 150 Valeo	Elantra (2006>), i30, Ceed ⓘ+
	Valeo NEW **813360** Valeo ES OE 977012F000 DOOWN **TYPE** 10PA15C **CODE**	**Connect/Fitting** **TYPE** PV-4 Ø(mm) 125 12 V **TYPE** **QTY**(CC) 230 Valeo	Cerato ⓘ+
	Valeo NEW **813361** Valeo ES OE 977013K720 HALLA **TYPE** VS-18 **CODE**	**Connect/Fitting** **TYPE** PV-6 Ø(mm) 120 12 V **TYPE** PAG46 **QTY**(CC) 150 Valeo	Grandeur, Sonata, Magentis ⓘ+

			TECH	
	Valeo NEW	813362	Connect/Fitting	Cerato
	Valeo ES		TYPE PV-4	
	OE	977012F500	Ø(mm) 125	
		DOOWN	12 V	
	TYPE	10PA15C	TYPE	
	CODE		QTY(CC) 120	
			Valeo	

	Valeo NEW	813364	Connect/Fitting	ix55
	Valeo ES		TYPE PV-7	
	OE	977013J010	Ø(mm) 120	
		HALLA	12 V	
	TYPE	VS-18	TYPE PAG46	
	CODE		QTY(CC) 230	
			Valeo	

	Valeo NEW	813366	Connect/Fitting	Elantra (2006>), i30, Ceed
	Valeo ES		TYPE PV-4	
	OE	977012H100	Ø(mm) 125	
		HALLA	12 V	
	TYPE	VS-14	TYPE PAG46	
	CODE		QTY(CC) 150	
			Valeo	

	Valeo NEW	813367	Connect/Fitting	Picanto (2004>2007)
	Valeo ES		TYPE PV-5	
	OE	9770107200	Ø(mm) 112	
		HALLA	12 V	
	TYPE	HS-11	TYPE PAG46	
	CODE		QTY(CC) 120	
			Valeo	

Picture not available Image non disponible Nicht verfügbares Bild Imagen no disponible Immagine non disponibile Zdjęcie niedostępne	Valeo NEW	813368	Connect/Fitting	i10
	Valeo ES		TYPE PV-5	
	OE	977010X100	Ø(mm) 118	
		HALLA	12 V	
	TYPE	HS-09	TYPE PAG46	
	CODE		QTY(CC) 120	
			Valeo	

Valeo

		TECH	
	Valeo NEW **813369** Valeo ES OE 977010X200 HALLA **TYPE** HS-09 **CODE**	**Connect/Fitting** **TYPE** PV-5 Ø(mm) 112 12 V **TYPE** PAG46 **QTY**(CC) 120 Valeo	i10 +
	Valeo NEW **813370** Valeo ES OE 977013E050 DOOWN **TYPE** 10PA17C **CODE**	**Connect/Fitting** **TYPE** PV-7 Ø(mm) 120 12 V **TYPE** **QTY**(CC) 150 Valeo	Sorento +
	Valeo NEW **813371** Valeo ES OE 977013E350 HALLA **TYPE** HS-18 **CODE**	**Connect/Fitting** **TYPE** PV-7 Ø(mm) 115 12 V **TYPE** PAG46 **QTY**(CC) 150 Valeo	Sorento +
	Valeo NEW **813372** Valeo ES OE 977012K201 HALLA **TYPE** VS-12 **CODE**	**Connect/Fitting** **TYPE** PV-5 Ø(mm) 119 12 V **TYPE** PAG46 **QTY**(CC) 100 Valeo	Soul (2008>), Venga +
	Valeo NEW **813373** Valeo ES OE 96406680 DELPHI/HARRISON **TYPE** SP-10 **CODE**	**Connect/Fitting** **TYPE** PV-4 Ø(mm) 115 12 V **TYPE** PAG100 **QTY**(CC) 150 Valeo **699936**	Matiz +

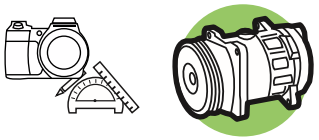

		TECH	
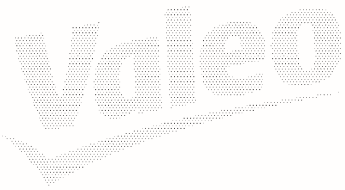	Valeo NEW **813374** Valeo ES OE 977014L000 TYPE CODE	Connect/Fitting TYPE Ø(mm) TYPE QTY(CC) Valeo	Solaris (Rus) +
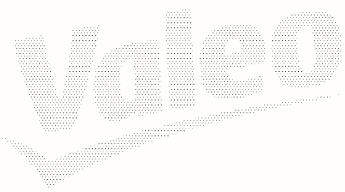	Valeo NEW **813375** Valeo ES OE 9770107100 HALLA TYPE HS-11 CODE	Connect/Fitting TYPE PV-4 Ø(mm) 112 12 V TYPE PAG46 QTY(CC) 120 Valeo	Picanto (2004>2007) +
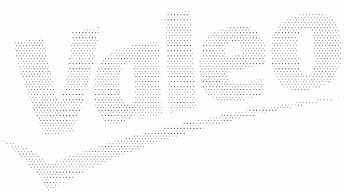	Valeo NEW **813377** Valeo ES OE 977012B151 HALLA TYPE VS-18 CODE	Connect/Fitting TYPE PV-6 Ø(mm) 120 12 V TYPE PAG46 QTY(CC) 230 Valeo	Santa Fé (2006>) +
Picture not available Image non disponible Nicht verfügbares Bild Imagen no disponible Immagine non disponibile Zdjęcie niedostępne	Valeo NEW **813379** Valeo ES OE 977010X000 HALLA TYPE HS-11 CODE	Connect/Fitting TYPE PV-4 Ø(mm) 112 12 V TYPE PAG46 QTY(CC) 150 Valeo	i10 +
Picture not available Image non disponible Nicht verfügbares Bild Imagen no disponible Immagine non disponibile Zdjęcie niedostępne	Valeo NEW **813381** Valeo ES OE 926009582R VALEO/ZEXEL TYPE DCS17 CODE	Connect/Fitting TYPE PV-4 Ø(mm) 112 12 V TYPE QTY(CC) 100 Valeo	Clio IV +

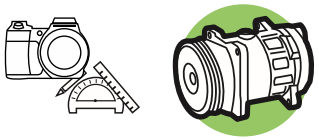

Valeo

		TECH	
Picture not available Image non disponible Nicht verfügbares Bild Imagen no disponible Immagine non disponibile Zdjęcie niedostępne	Valeo NEW **813382** Valeo ES OE 926000217R VALEO/ZEXEL **TYPE** DCS17 **CODE**	**Connect/Fitting** **TYPE** PV-7 Ø(mm) 115 12 V **TYPE** **QTY**(CC) 100 Valeo	Clio IV ⓘ+
Picture not available Image non disponible Nicht verfügbares Bild Imagen no disponible Immagine non disponibile Zdjęcie niedostępne	Valeo NEW **813383** Valeo ES OE 926002352R VALEO/ZEXEL **TYPE** DCS17 **CODE**	**Connect/Fitting** **TYPE** PV-6 Ø(mm) 125 12 V **TYPE** **QTY**(CC) 100 Valeo	Clio IV ⓘ+
Picture not available Image non disponible Nicht verfügbares Bild Imagen no disponible Immagine non disponibile Zdjęcie niedostępne	Valeo NEW **813384** Valeo ES OE 926001243R VALEO/ZEXEL **TYPE** DCS17 **CODE**	**Connect/Fitting** **TYPE** PV-6 Ø(mm) 115 12 V **TYPE** **QTY**(CC) 100 Valeo	Clio IV ⓘ+
Picture not available Image non disponible Nicht verfügbares Bild Imagen no disponible Immagine non disponibile Zdjęcie niedostępne	Valeo NEW **813400** Valeo ES OE 1J0820805 VALEO/ZEXEL **TYPE** DCS17 **CODE**	**Connect/Fitting** **TYPE** PV-6 Ø(mm) 128 12 V **TYPE** PAG100 **QTY**(CC) 150 Valeo **699936**	A3 (96>2003) ⓘ+
Picture not available Image non disponible Nicht verfügbares Bild Imagen no disponible Immagine non disponibile Zdjęcie niedostępne	Valeo NEW Valeo ES OE **TYPE** **CODE**	**Connect/Fitting** **TYPE** Ø(mm) **TYPE** **QTY**(CC) Valeo	ⓘ+

UNIVERSAL

Other part numbers (not shown in the catalogue) are available under programmed orders

D'autres références (non présentées dans le catalogue) sont disponibles sous commandes programmées

Weitere Artikelnummern (nicht im Katalog dargestellt) sind als Sonderauftrag erhältlich

Otras referencias (no incluidas en el catálogo) están disponibles bajo pedido programado

Ulteriori riferimenti (non presenti nel questo catalogo) saranno disponibili attraverso ordini programmati

Overige referenties (niet weergegeven in de catalogus) zijn op aanvraag leverbaar

Valeo	TECH CODE		Mounting Type	Ø mm	Type		Fitting Orientation	Fitting Type	Oil Type	Valeo
SELTEC										
FITTING										
815920	122-05440	VERTICAL O-RING 3/4 x 7/8					Vertical	O'Ring		
815921	122-05442	HORIZONTAL O-RING 3/4 x 7/8					Horizontal	O'Ring		
815922	122-05446	HORIZONTAL TUBE "O" 1 x 14					Horizontal	Tube "o"		
815923	122-05444	VERTICAL TUBE "O" 1 x 14					Vertical	Tube "o"		
815924	122-05441	VERTICAL O-RING 3/4 x 7/8 (FITTINGS)					Vertical	O'Ring		
TM13										
815806	435-54038		Ear	123	6GR	12V	Vertical	O'Ring	PAG100	**699936**
815810	435-54041		Ear	125	2AG	12V	Horizontal	O'Ring	PAG100	**699936**
815813	435-52120		Ear	125	2AG	12V	Vertical	O'Ring	PAG100	**699936**
815814	435-54014		Ear	123	8GR	12V	Horizontal	tube "o"	PAG100	**699936**
815815	435-54010		Ear	135	2AG	12V	Horizontal	tube "o"	PAG100	**699936**
815816	435-54120		Ear	123	8GR	12V	Vertical	O'Ring	PAG100	**699936**
815821	435-52141		Ear	123	8GR	12V	Vertical	O'Ring	PAG100	**699936**
815822	435-54012		Ear	135	2AG	24V	Horizontal	tube "o"	PAG100	**699936**
815823	435-54222		Ear	125	2AG	12V	none	PAD	PAG100	**699936**
815851	435-54070		Ear	135	2AG	12V	Vertical	O'Ring	PAG100	**699936**
815852	435-54122		Ear	123	8GR	12V	Horizontal	O'Ring	PAG100	**699936**
815900	435-54210	TM-13HS 2AG 12V B PAD	Ear	135	2AG	12V	none	PAD	PAG100	**699936**
815903	435-54212	TM-13HS 2AG 24V B PAD	Ear	135	2AG	24V	none	PAD	PAG100	**699936**
815906	435-54234	TM-13HS 8GR 12V B PAD	Ear	123	8GR	12V	none	PAD	PAG100	**699936**
815909	435-54236	TM-13HS 8GR 24V B PAD	Ear	123	8GR	24V	none	PAD	PAG100	**699936**
TM14-15										
815901	435-55210	TM-15HS 2AG 12V B PAD	Ear	135	2AG	12V	none	PAD	PAG100	**699936**
815904	435-55212	TM-15HS 2AG 24V B PAD	Ear	135	2AG	24V	none	PAD	PAG100	**699936**
815907	435-55234	TM-15HS 8GR 12V B PAD	Ear	123	8GR	12V	none	PAD	PAG100	**699936**
815910	435-55236	TM-15HS 8GR 24V B PAD	Ear	123	8GR	24V	none	PAD	PAG100	**699936**
TM15										
815800	435-55011		Ear	135	2AG	12V	Vertical	O'Ring	PAG100	**699936**
815801	488-25021		Ear	135	2AG	12V	Vertical	O'Ring	MIN>PAG100	**699936**
815802	435-55017		Ear	135	2AG	24V	Horizontal	O'Ring	PAG100	**699936**
815803	435-55021		Ear	135	2AG	12V	Vertical	O'Ring	PAG100	**699936**
815804	435-55121		Ear	123	8GR	12V	Vertical	O'Ring	PAG100	**699936**
815807	435-55120		Ear	123	8GR	12V	Vertical	O'Ring	PAG100	**699936**
815818	435-55122		Ear	123	8GR	12V	Horizontal	O'Ring	PAG100	**699936**
815824	435-55030		Ear	135	2AG	12V	Horizontal	O'Ring	PAG100	**699936**
815825	435-55036		Ear	125	2AG	12V	Vertical	O'Ring	PAG100	**699936**
815826	435-55038		Ear	123	8GR	12V	Vertical	O'Ring	PAG100	**699936**
815827	435-55041		Ear	152	2AG	12V	Vertical	O'Ring	PAG100	**699936**
815828	435-55045		Ear	152	2AG	12V	Horizontal	O'Ring	PAG100	**699936**
815829	435-55050		Ear	159	VGR	12V	Vertical	O'Ring	PAG100	**699936**
815830	435-55061		Ear	159	VGR	24V	Vertical	O'Ring	PAG100	**699936**
815831	435-55065		Ear	159	VGR	12V	Vertical	O'Ring	PAG100	**699936**
815832	435-55073		Ear	159	VGR	24V	Horizontal	O'Ring	PAG100	**699936**
815833	435-55123		Ear	123	8GR	24V	Horizontal	O'Ring	PAG100	**699936**
815834	435-55125		Ear	123	8GR	24V	Vertical	O'Ring	PAG100	**699936**
815835	435-55131		Ear	123	8GR	24V	Vertical	O'Ring	PAG100	**699936**
815836	435-55204		Ear	152	2AG	12V	none	PAD	PAG100	**699936**

Info : Otras referencias (no incluidas en el catálogo) están disponibles bajo pedido programado
Info: Ulteriori riferimenti (non presenti a catalogo) saranno disponibili attraverso ordini programmati
info: Overige referenties (niet weergegeven in de catalogus) zijn op aanvraag leverbaar

Valeo	TECH CODE		Mounting Type	Ø mm	Type		Fitting Orientation	Fitting Type	Oil Type	Valeo
SELTEC (.../...)										
TM15 (.../...)										
815837	435-55220		Ear	125	2AG	24V	none	PAD	PAG100	**699936**
TM16										
815808	435-56011		Ear	135	2AG	12V	Vertical	O'Ring	PAG100	**699936**
815809	435-56120		Ear	123	8GR	12V	Vertical	O'Ring	PAG100	**699936**
815811	435-56125		Ear	123	8GR	24V	Vertical	O'Ring	PAG100	**699936**
815838	435-56021		Ear	135	2AG	12V	Vertical	O'Ring	PAG100	**699936**
815839	435-56023		Ear	135	2AG	12V	Vertical	tube "o"	PAG100	**699936**
815840	435-56028		Ear	135	2AG	12V	Horizontal	tube "o"	PAG100	**699936**
815841	435-56029		Ear	135	2AG	24V	Horizontal	tube "o"	PAG100	**699936**
815842	435-56041		Ear	152	2AG	12V	Vertical	O'Ring	PAG100	**699936**
815843	435-56045		Ear	152	2AG	12V	Horizontal	O'Ring	PAG100	**699936**
815844	435-56050		Ear	159	VGR	12V	Vertical	O'Ring	PAG100	**699936**
815845	435-56122		Ear	123	8GR	12V	Horizontal	O'Ring	PAG100	**699936**
815846	435-56204		Ear	152	2AG	12V	none	PAD	PAG100	**699936**
815847	435-56241		Ear	125	2AG	24V	none	PAD	PAG100	**699936**
815848	435-56017		Ear	135	2AG	24V	Horizontal	O'Ring	PAG100	**699936**
815849	435-56018		Ear	125	2AG	12V	Vertical	O'Ring	PAG100	**699936**
815850	435-56123		Ear	123	8GR	24V	Horizontal	O'Ring	PAG100	**699936**
815902	435-56210	TM-16HS 2AG 12V B PAD	Ear	135	2AG	12V	none	PAD	PAG100	**699936**
815905	435-56212	TM-16HS 2AG 24V B PAD	Ear	135	2AG	24V	none	PAD	PAG100	**699936**
815908	435-56234	TM-16HS 8GR 12V B PAD	Ear	123	8GR	12V	none	PAD	PAG100	**699936**
815911	435-56236	TM-16HS 8GR 24V B PAD	Ear	123	8GR	24V	none	PAD	PAG100	**699936**
VC31										
815858	488-46530	VC31 2BG 24V sight glass	Direct	158	2B	24V			PAG100	**699936**
815859	488-46550	VC31 8PK 24V sight glass	Direct	156	8PK	24V			PAG100	**699936**
815860	488-46510	VC31 2AG 24V sight glass	Direct	152	2A	24V			PAG100	**699936**
SANDEN										
SD5H14										
815877	4509, 6626	SD 5H14 A2 12V V ORG	Ear	132	A2	12V	Vertical	O'Ring	PAG100	**699936**
815878	6627	SD 5H14 A2 24V V ORG	Ear	132	A2	24V	Vertical	O'Ring	PAG100	**699936**
815879	6628	SD 5H14 PV7 12V H ORG	Ear	119	PV7	12V	Horizontal	O'Ring	PAG100	**699936**
815880	4514, 6629	SD 5H14 PV7 12V V ORG	Ear	119	PV7	12V	Vertical	O'Ring	PAG100	**699936**
815881	4513, 6631	SD 5H14 A2 12V H ROT	Ear	132	A2	12V	Horizontal	Rotalock	PAG100	**699936**
815882	6632	SD 5H14 A2 24V H ROT	Ear	132	A2	24V	Horizontal	Rotalock	PAG100	**699936**
815883	6642	SD 5H14 A2 12V V ROT	Ear	132	A2	12V	Vertical	Rotalock	PAG100	**699936**
815891	4536, 6630	SD 5H14 A2 12V H ORG	Ear	132	A2	12V	Horizontal	O'Ring	PAG100	**699936**
815892	4537, 6634	SD 5H14 A2 24V H ORG	Ear	132	A2	24V	Horizontal	O'Ring	PAG100	**699936**
SD7H15										
815863	7862, 8023, 8227	SD 7H15 A2 12V H ORG	Ear	132	A2	12V	Horizontal	O'Ring	PAG100	**699936**
815864	7863, 8024, 8220	SD 7H15 A2 12V V ORG	Ear	132	A2	12V	Vertical	O'Ring	PAG100	**699936**
815867	7890, 8028, 8230	SD 7H15 PV8 12V V ORG	Ear	119	PV8	12V	Vertical	O'Ring	PAG100	**699936**
815868	7866, 8017, 8239	SD 7H15 A2 24V V ORG	Ear	132	A2	24V	Vertical	O'Ring	PAG100	**699936**
815870	8086, 8240	SD 7H15 PV8 24V V ORG	Ear	119	PV8	24V	Vertical	O'Ring	PAG100	**699936**
815871	7851, 8019	SD 7H15 A2 12V H ROT	Ear	132	A2	12V	Horizontal	Rotalock	PAG100	**699936**
815873	4643, 7849	SD 7H15 A2 12V V ROT	Ear	132	A2	12V	Vertical	Rotalock	PAG100	**699936**
815874	4710, 7850	SD 7H15 PV8 12V V ROT	Ear	119	PV8	12V	Vertical	Rotalock	PAG100	**699936**
815875	7871, 8015	SD 7H15 A2 24V H ROT	Ear	132	A2	24V	Horizontal	Rotalock	PAG100	**699936**

Info : Other partnumbers (not showned in the catalogue) are available under programmed orders
Info : d'autres références (non présentées dans le catalogue) sont disponibles sous commandes programmées
Information: Weitere Artikelnummern (nicht im Katalog dargestellt) sind als Sonderauftrag erhältlich

Valeo	TECH CODE		Mounting Type	Ø mm	Type		Fitting Orientation	Fitting Type	Oil Type	Valeo
SANDEN (.../...)										
SD7H15 (.../...)										
815876	7872	SD 7H15 A2 24V V ROT	Ear	132	A2	24V	Vertical	Rotalock	PAG100	**699936**
815947	7889, 8027	SD 7H15 PV8 12V H ORG	Ear	119	PV8	12V	Horizontal	O'Ring	PAG100	**699936**
815948	8085	SD 7H15 PV8 24V H ORG	Ear	119	PV8	24V	Horizontal	O'Ring	PAG100	**699936**

Info : Otras referencias (no incluidas en el catálogo) están disponibles bajo pedido programado
Info: Ulteriori riferimenti (non presenti a catalogo) saranno disponibili attraverso ordini programmati
info: Overige referenties (niet weergegeven in de catalogus) zijn op aanvraag leverbaar

		TECH	
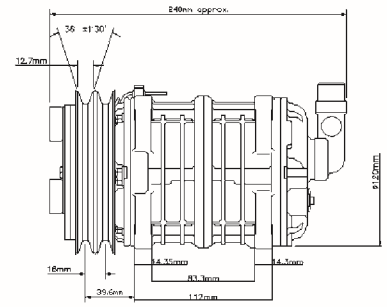	Valeo NEW **815800** Valeo REF. SELTEC TYPE TM15 CODE 435-55011 MOUNT TYPE Ear ARMATURE TYPE 3-eye	Connect/Fitting bullet TYPE 2AG Ømm 135 12V FITTING ORIENTATION Vertical FITTING TYPE O'Ring FITTING SIZE 3/4 x 7/8	TYPE PAG100 QTY 150 Valeo **699936**
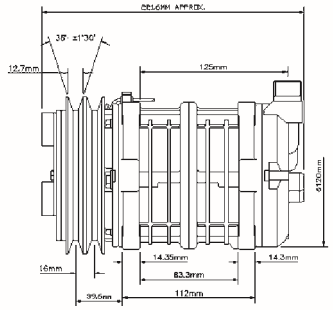	Valeo NEW **815801** Valeo REF. SELTEC TYPE TM15 CODE 488-25021 MOUNT TYPE Ear ARMATURE TYPE 3-eye	Connect/Fitting bullet TYPE 2AG Ømm 135 12V FITTING ORIENTATION Vertical FITTING TYPE O'Ring FITTING SIZE 3/4 x 7/8	TYPE MIN>PAG100 QTY 150 Valeo **699936**
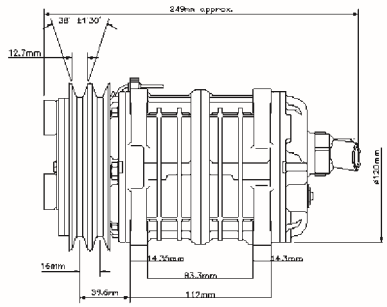	Valeo NEW **815802** Valeo REF. SELTEC TYPE TM15 CODE 435-55017 MOUNT TYPE Ear ARMATURE TYPE 3-eye	Connect/Fitting bullet TYPE 2AG Ømm 135 24V FITTING ORIENTATION Horizontal FITTING TYPE O'Ring FITTING SIZE 3/4 x 7/8	TYPE PAG100 QTY 150 Valeo **699936**
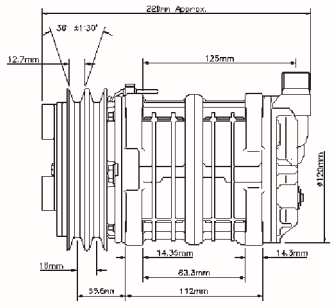	Valeo NEW **815803** Valeo REF. SELTEC TYPE TM15 CODE 435-55021 MOUNT TYPE Ear ARMATURE TYPE 3-eye	Connect/Fitting bullet TYPE 2AG Ømm 135 12V FITTING ORIENTATION Vertical FITTING TYPE O'Ring FITTING SIZE 3/4 x 7/8	TYPE PAG100 QTY 150 Valeo **699936**
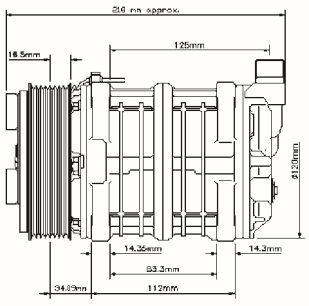	Valeo NEW **815804** Valeo REF. SELTEC TYPE TM15 CODE 435-55121 MOUNT TYPE Ear ARMATURE TYPE 3-eye	Connect/Fitting bullet TYPE 8GR Ømm 123 12V FITTING ORIENTATION Vertical FITTING TYPE O'Ring FITTING SIZE 3/4 x 7/8	TYPE PAG100 QTY 150 Valeo **699936**

		TECH	
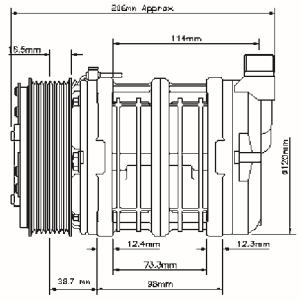	Valeo NEW **815806**	Connect/Fitting bullet	TYPE PAG100
	Valeo REF.	TYPE 6GR	QTY 150
	SELTEC	Ø mm 123	Valeo **699936**
	TYPE TM13	12V	
	CODE 435-54038	FITTING ORIENTATION Vertical	
	MOUNT TYPE Ear	FITTING TYPE O'Ring	
	ARMATURE TYPE 3-eye	FITTING SIZE 3/4 x 7/8	
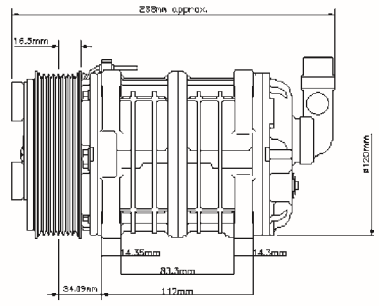	Valeo NEW **815807**	Connect/Fitting bullet	TYPE PAG100
	Valeo REF.	TYPE 8GR	QTY 150
	SELTEC	Ø mm 123	Valeo **699936**
	TYPE TM15	12V	
	CODE 435-55120	FITTING ORIENTATION Vertical	
	MOUNT TYPE Ear	FITTING TYPE O'Ring	
	ARMATURE TYPE 3-eye	FITTING SIZE 3/4 x 7/8	
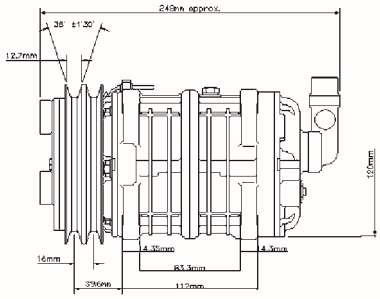	Valeo NEW **815808**	Connect/Fitting bullet	TYPE PAG100
	Valeo REF.	TYPE 2AG	QTY 180
	SELTEC	Ø mm 135	Valeo **699936**
	TYPE TM16	12V	
	CODE 435-56011	FITTING ORIENTATION Vertical	
	MOUNT TYPE Ear	FITTING TYPE O'Ring	
	ARMATURE TYPE 3-eye	FITTING SIZE 3/4 x 7/8	
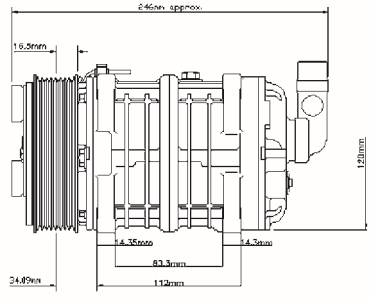	Valeo NEW **815809**	Connect/Fitting bullet	TYPE PAG100
	Valeo REF.	TYPE 8GR	QTY 180
	SELTEC	Ø mm 123	Valeo **699936**
	TYPE TM16	12V	
	CODE 435-56120	FITTING ORIENTATION Vertical	
	MOUNT TYPE Ear	FITTING TYPE O'Ring	
	ARMATURE TYPE 3-eye	FITTING SIZE 3/4 x 7/8	
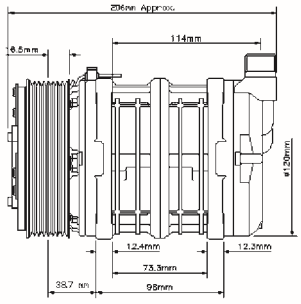	Valeo NEW **815810**	Connect/Fitting bullet	TYPE PAG100
	Valeo REF.	TYPE 2AG	QTY 150
	SELTEC	Ø mm 125	Valeo **699936**
	TYPE TM13	12V	
	CODE 435-54041	FITTING ORIENTATION Horizontal	
	MOUNT TYPE Ear	FITTING TYPE O'Ring	
	ARMATURE TYPE 3-eye	FITTING SIZE 3/4 x 7/8	

Valeo

		TECH	
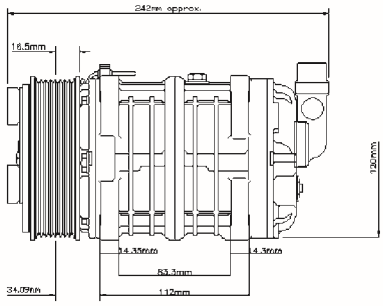	Valeo NEW 815811	Connect/Fitting bullet	TYPE PAG100
	Valeo REF.	TYPE 8GR	QTY 180
	SELTEC	Ømm 123	Valeo 699936
	TYPE TM16	24V	
	CODE 435-56125	FITTING ORIENTATION Vertical	
	MOUNT TYPE Ear	FITTING TYPE O'Ring	
	ARMATURE TYPE 3-eye	FITTING SIZE 3/4 x 7/8	
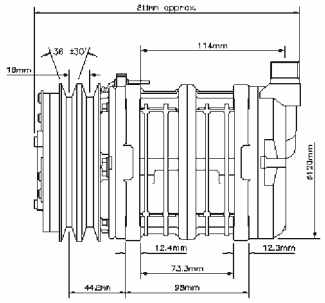	Valeo NEW 815813	Connect/Fitting bullet	TYPE PAG100
	Valeo REF.	TYPE 2AG	QTY 150
	SELTEC	Ømm 125	Valeo 699936
	TYPE TM13	12V	
	CODE 435-52120	FITTING ORIENTATION Vertical	
	MOUNT TYPE Ear	FITTING TYPE O'Ring	
	ARMATURE TYPE leaf-spring	FITTING SIZE 3/4 x 7/8	
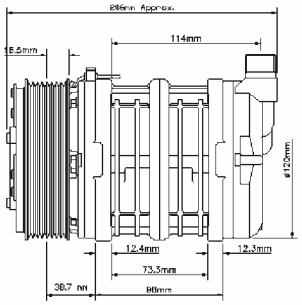	Valeo NEW 815814	Connect/Fitting bullet	TYPE PAG100
	Valeo REF.	TYPE 8GR	QTY 150
	SELTEC	Ømm 123	Valeo 699936
	TYPE TM13	12V	
	CODE 435-54014	FITTING ORIENTATION Horizontal	
	MOUNT TYPE Ear	FITTING TYPE tube "o"	
	ARMATURE TYPE 3-eye	FITTING SIZE 1 X 14	
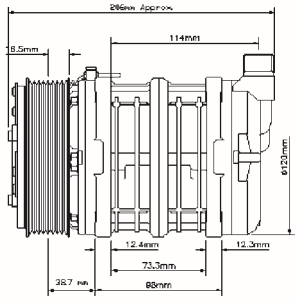	Valeo NEW 815815	Connect/Fitting bullet	TYPE PAG100
	Valeo REF.	TYPE 2AG	QTY 150
	SELTEC	Ømm 135	Valeo 699936
	TYPE TM13	12V	
	CODE 435-54010	FITTING ORIENTATION Horizontal	
	MOUNT TYPE Ear	FITTING TYPE tube "o"	
	ARMATURE TYPE 3-eye	FITTING SIZE 1 X 14	
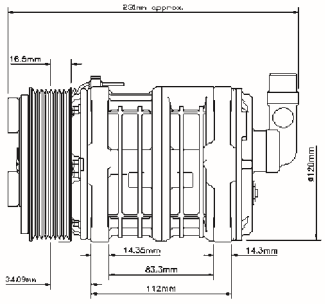	Valeo NEW 815816	Connect/Fitting bullet	TYPE PAG100
	Valeo REF.	TYPE 8GR	QTY 150
	SELTEC	Ømm 123	Valeo 699936
	TYPE TM13	12V	
	CODE 435-54120	FITTING ORIENTATION Vertical	
	MOUNT TYPE Ear	FITTING TYPE O'Ring	
	ARMATURE TYPE 3-eye	FITTING SIZE 3/4 x 7/8	

Valeo

		TECH	
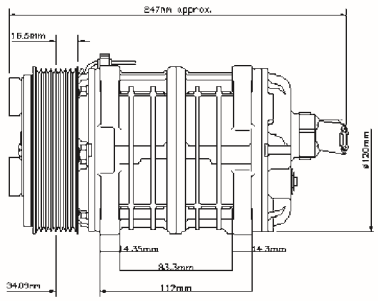	Valeo NEW 815818	Connect/Fitting bullet	TYPE PAG100
	Valeo REF.	TYPE 8GR	QTY 150
	SELTEC	Ømm 123	Valeo 699936
	TYPE TM15	12V	
	CODE 435-55122	FITTING ORIENTATION Horizontal	
	MOUNT TYPE Ear	FITTING TYPE O'Ring	
	ARMATURE TYPE 3-eye	FITTING SIZE 3/4 x 7/8	
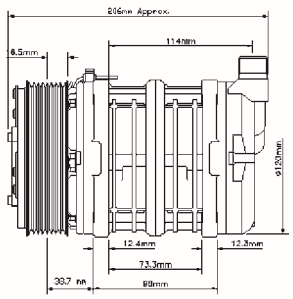	Valeo NEW 815821	Connect/Fitting bullet	TYPE PAG100
	Valeo REF.	TYPE 8GR	QTY 150
	SELTEC	Ømm 123	Valeo 699936
	TYPE TM13	12V	
	CODE 435-52141	FITTING ORIENTATION Vertical	
	MOUNT TYPE Ear	FITTING TYPE O'Ring	
	ARMATURE TYPE leaf-spring	FITTING SIZE 3/4 x 7/8	
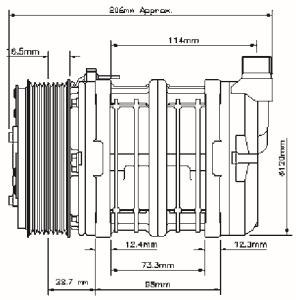	Valeo NEW 815822	Connect/Fitting bullet	TYPE PAG100
	Valeo REF.	TYPE 2AG	QTY 150
	SELTEC	Ømm 135	Valeo 699936
	TYPE TM13	24V	
	CODE 435-54012	FITTING ORIENTATION Horizontal	
	MOUNT TYPE Ear	FITTING TYPE tube "o"	
	ARMATURE TYPE 3-eye	FITTING SIZE 1 X 14	
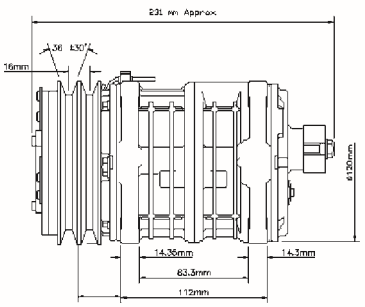	Valeo NEW 815823	Connect/Fitting bullet	TYPE PAG100
	Valeo REF.	TYPE 2AG	QTY 150
	SELTEC	Ømm 125	Valeo 699936
	TYPE TM13	12V	
	CODE 435-54222	FITTING ORIENTATION none	
	MOUNT TYPE Ear	FITTING TYPE PAD	
	ARMATURE TYPE leaf-spring	FITTING SIZE n/a	
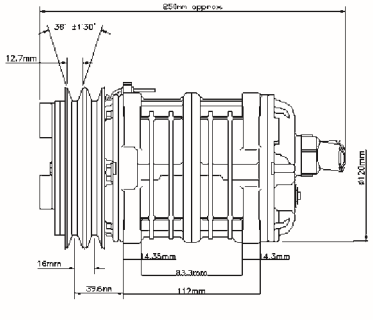	Valeo NEW 815824	Connect/Fitting bullet	TYPE PAG100
	Valeo REF.	TYPE 2AG	QTY 150
	SELTEC	Ømm 135	Valeo 699936
	TYPE TM15	12V	
	CODE 435-55030	FITTING ORIENTATION Horizontal	
	MOUNT TYPE Ear	FITTING TYPE O'Ring	
	ARMATURE TYPE 3-eye	FITTING SIZE 3/4 x 7/8	

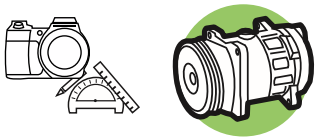

Valeo

		TECH	
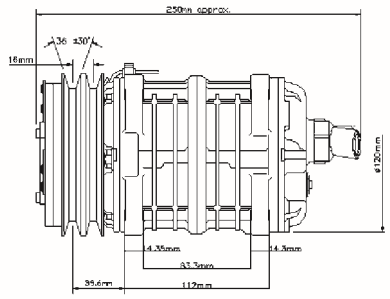	Valeo NEW **815825** Valeo REF. SELTEC TYPE TM15 CODE 435-55036 MOUNT TYPE Ear ARMATURE TYPE leaf-spring	Connect/Fitting bullet TYPE 2AG Ømm 125 12V FITTING ORIENTATION Vertical FITTING TYPE O'Ring FITTING SIZE 3/4 x 7/8	TYPE PAG100 QTY 150 Valeo **699936**
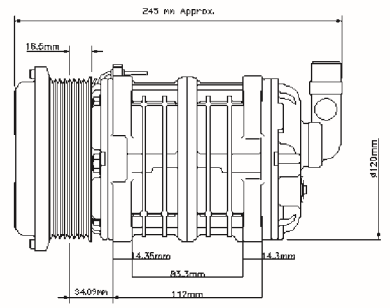	Valeo NEW **815826** Valeo REF. SELTEC TYPE TM15 CODE 435-55038 MOUNT TYPE Ear ARMATURE TYPE Dust Cover	Connect/Fitting bullet TYPE 8GR Ømm 123 12V FITTING ORIENTATION Vertical FITTING TYPE O'Ring FITTING SIZE 3/4 x 7/8	TYPE PAG100 QTY 150 Valeo **699936**
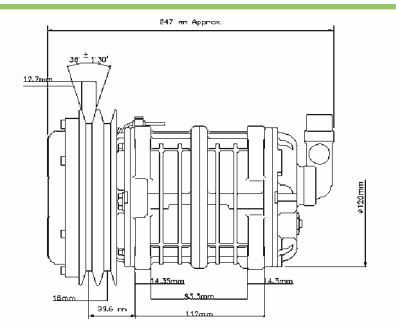	Valeo NEW **815827** Valeo REF. SELTEC TYPE TM15 CODE 435-55041 MOUNT TYPE Ear ARMATURE TYPE Dust Cover	Connect/Fitting bullet TYPE 2AG Ømm 152 12V FITTING ORIENTATION Vertical FITTING TYPE O'Ring FITTING SIZE 3/4 x 7/8	TYPE PAG100 QTY 150 Valeo **699936**
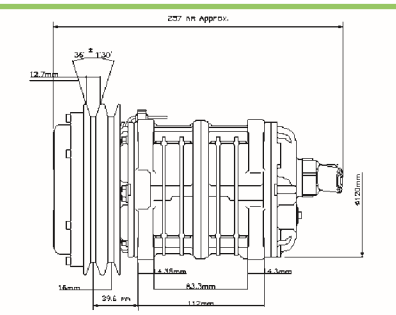	Valeo NEW **815828** Valeo REF. SELTEC TYPE TM15 CODE 435-55045 MOUNT TYPE Ear ARMATURE TYPE Dust Cover	Connect/Fitting bullet TYPE 2AG Ømm 152 12V FITTING ORIENTATION Horizontal FITTING TYPE O'Ring FITTING SIZE 3/4 x 7/8	TYPE PAG100 QTY 150 Valeo **699936**
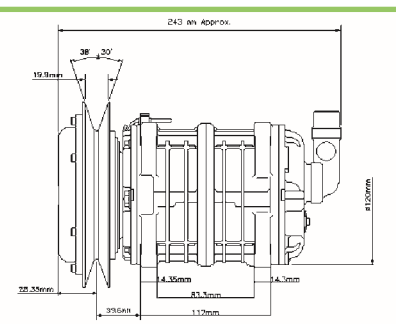	Valeo NEW **815829** Valeo REF. SELTEC TYPE TM15 CODE 435-55050 MOUNT TYPE Ear ARMATURE TYPE Dust Cover	Connect/Fitting bullet TYPE VGR Ømm 159 12V FITTING ORIENTATION Vertical FITTING TYPE O'Ring FITTING SIZE 3/4 x 7/8	TYPE PAG100 QTY 150 Valeo **699936**

Valeo

		TECH	
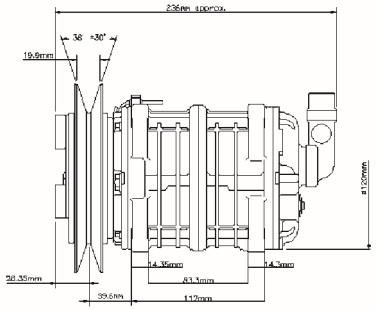	Valeo NEW **815830** Valeo REF. SELTEC TYPE TM15 CODE 435-55061 MOUNT TYPE Ear ARMATURE TYPE 3-eye	Connect/Fitting bullet TYPE VGR Ømm 159 24V FITTING ORIENTATION Vertical FITTING TYPE O'Ring FITTING SIZE 3/4 x 7/8	TYPE PAG100 QTY 150 Valeo **699936**
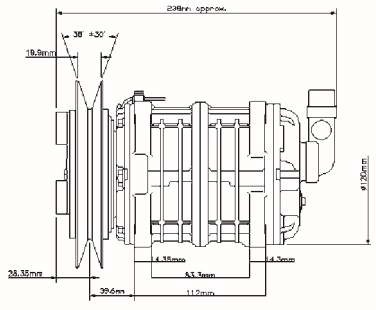	Valeo NEW **815831** Valeo REF. SELTEC TYPE TM15 CODE 435-55065 MOUNT TYPE Ear ARMATURE TYPE 3-eye	Connect/Fitting bullet TYPE VGR Ømm 159 12V FITTING ORIENTATION Vertical FITTING TYPE O'Ring FITTING SIZE 3/4 x 7/8	TYPE PAG100 QTY 150 Valeo **699936**
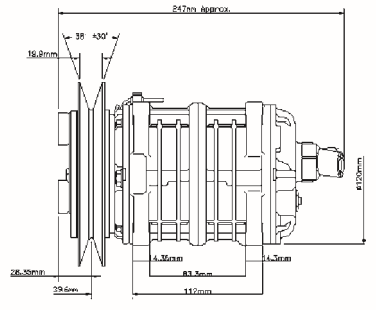	Valeo NEW **815832** Valeo REF. SELTEC TYPE TM15 CODE 435-55073 MOUNT TYPE Ear ARMATURE TYPE 3-eye	Connect/Fitting bullet TYPE VGR Ømm 159 24V FITTING ORIENTATION Horizontal FITTING TYPE O'Ring FITTING SIZE 3/4 x 7/8	TYPE PAG100 QTY 150 Valeo **699936**
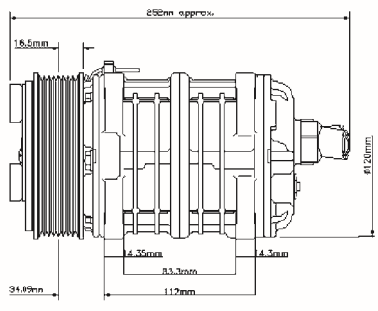	Valeo NEW **815833** Valeo REF. SELTEC TYPE TM15 CODE 435-55123 MOUNT TYPE Ear ARMATURE TYPE 3-eye	Connect/Fitting bullet TYPE 8GR Ømm 123 24V FITTING ORIENTATION Horizontal FITTING TYPE O'Ring FITTING SIZE 3/4 x 7/8	TYPE PAG100 QTY 150 Valeo **699936**
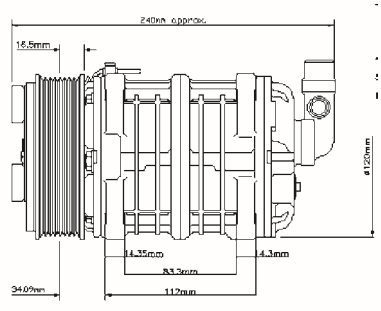	Valeo NEW **815834** Valeo REF. SELTEC TYPE TM15 CODE 435-55125 MOUNT TYPE Ear ARMATURE TYPE 3-eye	Connect/Fitting bullet TYPE 8GR Ømm 123 24V FITTING ORIENTATION Vertical FITTING TYPE O'Ring FITTING SIZE 3/4 x 7/8	TYPE PAG100 QTY 150 Valeo **699936**

Valeo

		TECH	
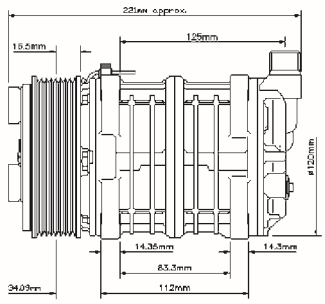	Valeo NEW 815835	Connect/Fitting bullet	TYPE PAG100
	Valeo REF.	TYPE 8GR	QTY 150
	SELTEC	Ømm 123	Valeo 699936
	TYPE TM15	24V	
	CODE 435-55131	FITTING ORIENTATION Vertical	
	MOUNT TYPE Ear	FITTING TYPE O'Ring	
	ARMATURE TYPE 3-eye	FITTING SIZE 3/4 x 7/8	
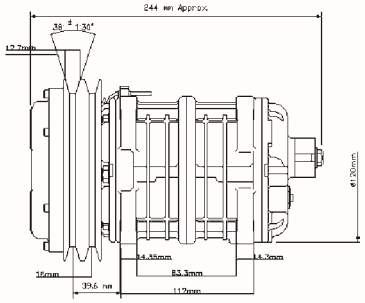	Valeo NEW 815836	Connect/Fitting bullet	TYPE PAG100
	Valeo REF.	TYPE 2AG	QTY 150
	SELTEC	Ømm 152	Valeo 699936
	TYPE TM15	12V	
	CODE 435-55204	FITTING ORIENTATION none	
	MOUNT TYPE Ear	FITTING TYPE PAD	
	ARMATURE TYPE Dust Cover	FITTING SIZE n/a	
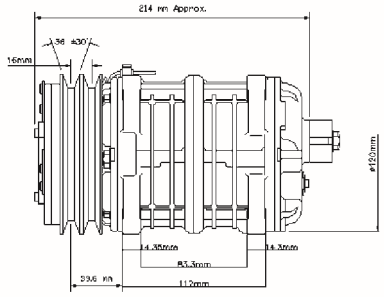	Valeo NEW 815837	Connect/Fitting bullet	TYPE PAG100
	Valeo REF.	TYPE 2AG	QTY 150
	SELTEC	Ømm 125	Valeo 699936
	TYPE TM15	24V	
	CODE 435-55220	FITTING ORIENTATION none	
	MOUNT TYPE Ear	FITTING TYPE PAD	
	ARMATURE TYPE leaf-spring	FITTING SIZE n/a	
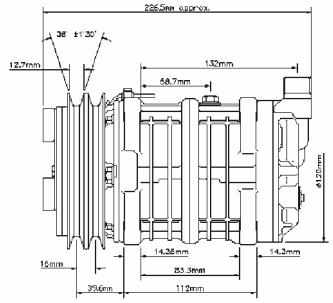	Valeo NEW 815838	Connect/Fitting bullet	TYPE PAG100
	Valeo REF.	TYPE 2AG	QTY 180
	SELTEC	Ømm 135	Valeo 699936
	TYPE TM16	12V	
	CODE 435-56021	FITTING ORIENTATION Vertical	
	MOUNT TYPE Ear	FITTING TYPE O'Ring	
	ARMATURE TYPE 3-eye	FITTING SIZE 3/4 x 7/8	
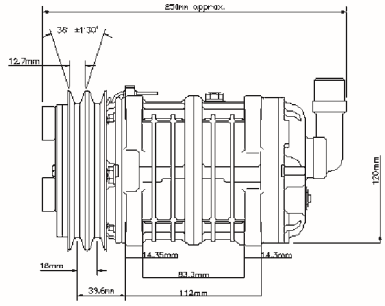	Valeo NEW 815839	Connect/Fitting bullet	TYPE PAG100
	Valeo REF.	TYPE 2AG	QTY 180
	SELTEC	Ømm 135	Valeo 699936
	TYPE TM16	12V	
	CODE 435-56023	FITTING ORIENTATION Vertical	
	MOUNT TYPE Ear	FITTING TYPE tube "o"	
	ARMATURE TYPE 3-eye	FITTING SIZE 1 X 14	

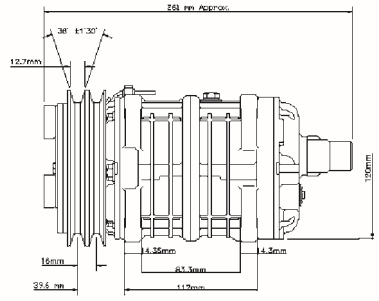	Valeo NEW	815840	Connect/Fitting	bullet	TYPE	PAG100
	Valeo REF.		TYPE	2AG	QTY	180
		SELTEC	Ømm	135	Valeo	699936
	TYPE	TM16		12V		
	CODE	435-56028	FITTING ORIENTATION	Horizontal		
	MOUNT TYPE	Ear	FITTING TYPE	tube "o"		
	ARMATURE TYPE	3-eye	FITTING SIZE	1 X 14		

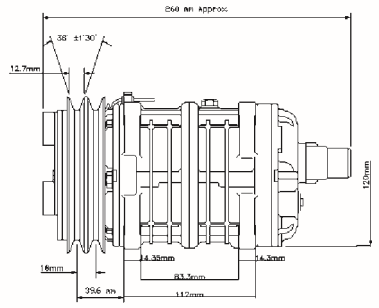	Valeo NEW	815841	Connect/Fitting	bullet	TYPE	PAG100
	Valeo REF.		TYPE	2AG	QTY	180
		SELTEC	Ømm	135	Valeo	699936
	TYPE	TM16		24V		
	CODE	435-56029	FITTING ORIENTATION	Horizontal		
	MOUNT TYPE	Ear	FITTING TYPE	tube "o"		
	ARMATURE TYPE	3-eye	FITTING SIZE	1 X 14		

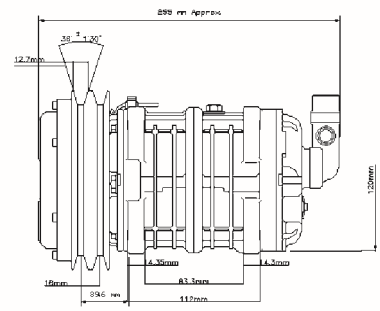	Valeo NEW	815842	Connect/Fitting	bullet	TYPE	PAG100
	Valeo REF.		TYPE	2AG	QTY	180
		SELTEC	Ømm	152	Valeo	699936
	TYPE	TM16		12V		
	CODE	435-56041	FITTING ORIENTATION	Vertical		
	MOUNT TYPE	Ear	FITTING TYPE	O'Ring		
	ARMATURE TYPE	Dust Cover	FITTING SIZE	3/4 x 7/8		

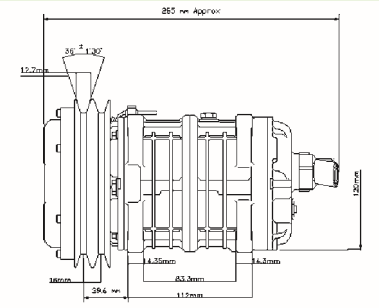	Valeo NEW	815843	Connect/Fitting	bullet	TYPE	PAG100
	Valeo REF.		TYPE	2AG	QTY	180
		SELTEC	Ømm	152	Valeo	699936
	TYPE	TM16		12V		
	CODE	435-56045	FITTING ORIENTATION	Horizontal		
	MOUNT TYPE	Ear	FITTING TYPE	O'Ring		
	ARMATURE TYPE	Dust Cover	FITTING SIZE	3/4 x 7/8		

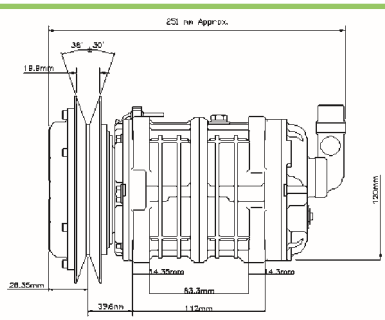	Valeo NEW	815844	Connect/Fitting	bullet	TYPE	PAG100
	Valeo REF.		TYPE	VGR	QTY	180
		SELTEC	Ømm	159	Valeo	699936
	TYPE	TM16		12V		
	CODE	435-56050	FITTING ORIENTATION	Vertical		
	MOUNT TYPE	Ear	FITTING TYPE	O'Ring		
	ARMATURE TYPE	Dust Cover	FITTING SIZE	3/4 x 7/8		

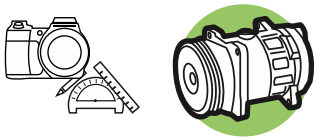

Valeo

		TECH	
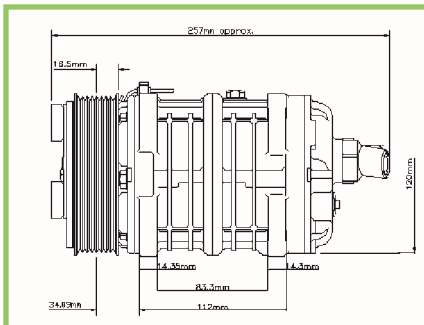	Valeo NEW **815845** Valeo REF. SELTEC TYPE TM16 CODE 435-56122 MOUNT TYPE Ear ARMATURE TYPE 3-eye	Connect/Fitting bullet TYPE 8GR Ømm 123 12V FITTING ORIENTATION Horizontal FITTING TYPE O'Ring FITTING SIZE 3/4 x 7/8	TYPE PAG100 QTY 180 Valeo **699936**
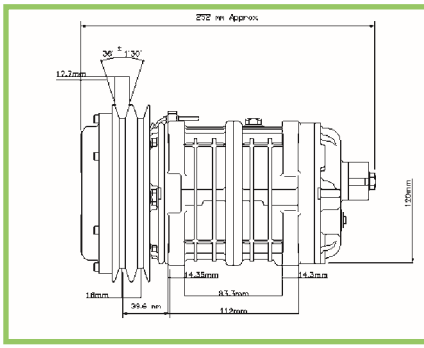	Valeo NEW **815846** Valeo REF. SELTEC TYPE TM16 CODE 435-56204 MOUNT TYPE Ear ARMATURE TYPE Dust Cover	Connect/Fitting bullet TYPE 2AG Ømm 152 12V FITTING ORIENTATION none FITTING TYPE PAD FITTING SIZE n/a	TYPE PAG100 QTY 180 Valeo **699936**
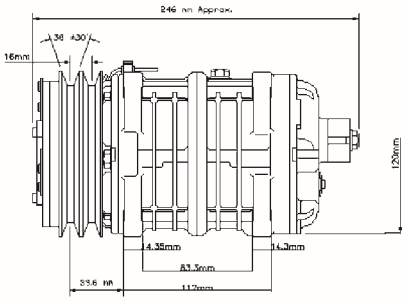	Valeo NEW **815847** Valeo REF. SELTEC TYPE TM16 CODE 435-56241 MOUNT TYPE Ear ARMATURE TYPE leaf-spring	Connect/Fitting bullet TYPE 2AG Ømm 125 24V FITTING ORIENTATION none FITTING TYPE PAD FITTING SIZE n/a	TYPE PAG100 QTY 180 Valeo **699936**
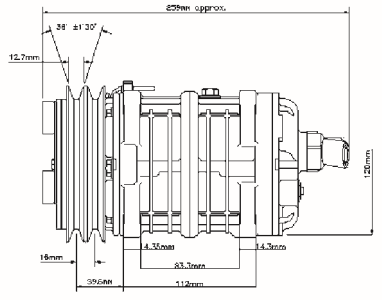	Valeo NEW **815848** Valeo REF. SELTEC TYPE TM16 CODE 435-56017 MOUNT TYPE Ear ARMATURE TYPE 3-eye	Connect/Fitting bullet TYPE 2AG Ømm 135 24V FITTING ORIENTATION Horizontal FITTING TYPE O'Ring FITTING SIZE 3/4 x 7/8	TYPE PAG100 QTY 180 Valeo **699936**
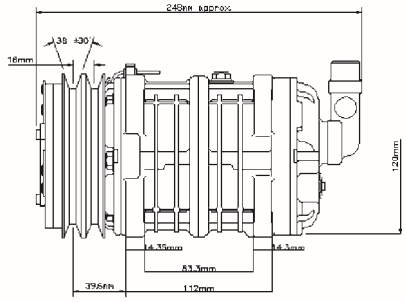	Valeo NEW **815849** Valeo REF. SELTEC TYPE TM16 CODE 435-56018 MOUNT TYPE Ear ARMATURE TYPE leaf-spring	Connect/Fitting bullet TYPE 2AG Ømm 125 12V FITTING ORIENTATION Vertical FITTING TYPE O'Ring FITTING SIZE 3/4 x 7/8	TYPE PAG100 QTY 180 Valeo **699936**

Valeo

	TECH	

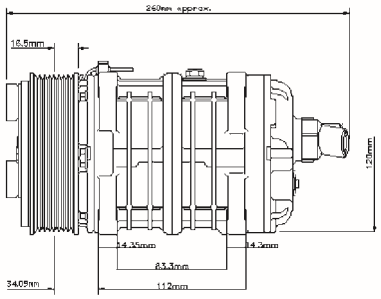

Valeo NEW	815850	Connect/Fitting	bullet	TYPE	PAG100
Valeo REF.		TYPE	8GR	QTY	180
	SELTEC	Ømm	123	Valeo	699936
TYPE	TM16		24V		
CODE	435-56123	FITTING ORIENTATION	Horizontal		
MOUNT TYPE	Ear	FITTING TYPE	O'Ring		
ARMATURE TYPE	3-eye	FITTING SIZE	3/4 x 7/8		

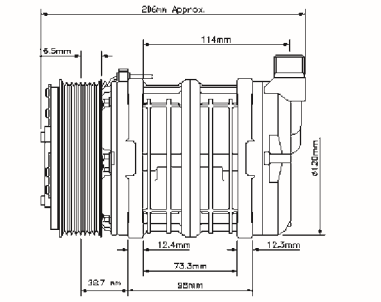

Valeo NEW	815851	Connect/Fitting	bullet	TYPE	PAG100
Valeo REF.		TYPE	2AG	QTY	150
	SELTEC	Ømm	135	Valeo	699936
TYPE	TM13		12V		
CODE	435-54070	FITTING ORIENTATION	Vertical		
MOUNT TYPE	Ear	FITTING TYPE	O'Ring		
ARMATURE TYPE	3-eye	FITTING SIZE	3/4 x 7/8		

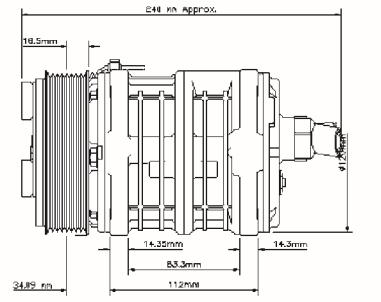

Valeo NEW	815852	Connect/Fitting	bullet	TYPE	PAG100
Valeo REF.		TYPE	8GR	QTY	150
	SELTEC	Ømm	123	Valeo	699936
TYPE	TM13		12V		
CODE	435-54122	FITTING ORIENTATION	Horizontal		
MOUNT TYPE	Ear	FITTING TYPE	O'Ring		
ARMATURE TYPE	3-eye	FITTING SIZE	3/4 x 7/8		

Picture not available
Image non disponible
Imagen no disponible
Immagine non disponibile
Nicht verfügbares Bild
Zdjęcie niedostępne

Valeo NEW	815858	Connect/Fitting		TYPE	PAG100
Valeo REF.		TYPE	2B	QTY	
	SELTEC	Ømm	158	Valeo	699936
TYPE	VC31		24V		
CODE	488-46530	FITTING ORIENTATION			
MOUNT TYPE	Direct	FITTING TYPE			
ARMATURE TYPE		FITTING SIZE			

Picture not available
Image non disponible
Imagen no disponible
Immagine non disponibile
Nicht verfügbares Bild
Zdjęcie niedostępne

Valeo NEW	815859	Connect/Fitting		TYPE	PAG100
Valeo REF.		TYPE	8PK	QTY	
	SELTEC	Ømm	156	Valeo	699936
TYPE	VC31		24V		
CODE	488-46550	FITTING ORIENTATION			
MOUNT TYPE	Direct	FITTING TYPE			
ARMATURE TYPE		FITTING SIZE			

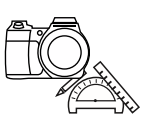

Valeo

		TECH	

Picture not available
Image non disponible
Imagen no disponible
Immagine non disponibile
Nicht verfügbares Bild
Zdjęcie niedostępne

Valeo NEW	815860	Connect/Fitting		TYPE	PAG100
Valeo REF.		TYPE	2A	QTY	
	SELTEC	Ømm	152	Valeo	699936
TYPE	VC31		24V		
CODE	488-46510	FITTING ORIENTATION			
MOUNT TYPE	Direct	FITTING TYPE			
ARMATURE TYPE		FITTING SIZE			

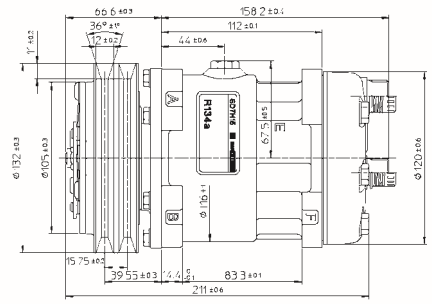

Valeo NEW	815863	Connect/Fitting		TYPE	PAG100
Valeo REF.		TYPE	A2	QTY	135
	SANDEN	Ømm	132	Valeo	699936
TYPE	SD7H15		12V		SD 7H15 7862
CODE	7862, 8023, 8227	FITTING ORIENTATION	Horizontal		
MOUNT TYPE	Ear	FITTING TYPE	O'Ring		
ARMATURE TYPE		FITTING SIZE			

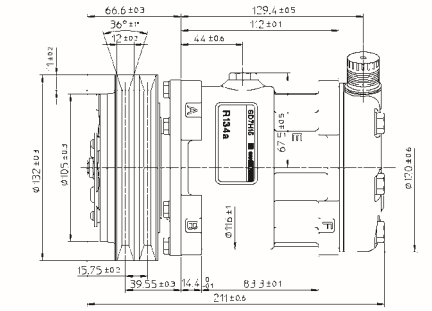

Valeo NEW	815864	Connect/Fitting		TYPE	PAG100
Valeo REF.		TYPE	A2	QTY	135
	SANDEN	Ømm	132	Valeo	699936
TYPE	SD7H15		12V		SD 7H15 7863
CODE	7863, 8024, 8220	FITTING ORIENTATION	Vertical		
MOUNT TYPE	Ear	FITTING TYPE	O'Ring		
ARMATURE TYPE		FITTING SIZE			

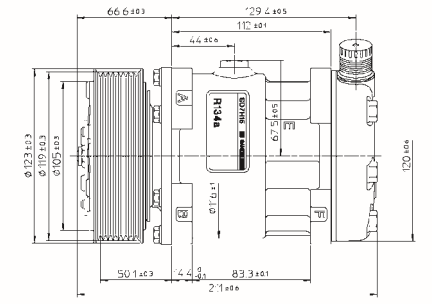

Valeo NEW	815867	Connect/Fitting		TYPE	PAG100
Valeo REF.		TYPE	PV8	QTY	135
	SANDEN	Ømm	119	Valeo	699936
TYPE	SD7H15		12V		SD 7H15 7890
CODE	7890, 8028, 8230	FITTING ORIENTATION	Vertical		
MOUNT TYPE	Ear	FITTING TYPE	O'Ring		
ARMATURE TYPE		FITTING SIZE			

Valeo NEW	815868	Connect/Fitting		TYPE	PAG100
Valeo REF.		TYPE	A2	QTY	135
	SANDEN	Ømm	132	Valeo	699936
TYPE	SD7H15		24V		SD 7H15 7866
CODE	7866, 8017, 8239	FITTING ORIENTATION	Vertical		
MOUNT TYPE	Ear	FITTING TYPE	O'Ring		
ARMATURE TYPE		FITTING SIZE			

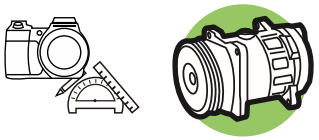

		TECH	
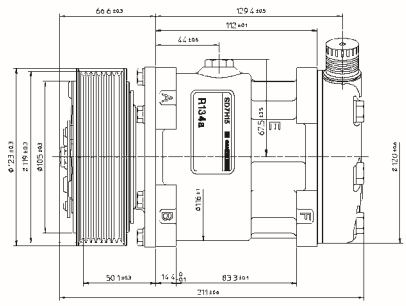	Valeo NEW **815870**	Connect/Fitting	TYPE PAG100
	Valeo REF.	TYPE PV8	QTY 135
	SANDEN	Ømm 119	Valeo **699936**
	TYPE SD7H15	24V	SD 7H15 8086
	CODE 8086, 8240	FITTING ORIENTATION Vertical	
	MOUNT TYPE Ear	FITTING TYPE O'Ring	
	ARMATURE TYPE	FITTING SIZE	
	Valeo NEW **815871**	Connect/Fitting	TYPE PAG100
	Valeo REF.	TYPE A2	QTY 135
	SANDEN	Ømm 132	Valeo **699936**
	TYPE SD7H15	12V	SD 7H15 7851
	CODE 7851, 8019	FITTING ORIENTATION Horizontal	
	MOUNT TYPE Ear	FITTING TYPE Rotalock	
	ARMATURE TYPE	FITTING SIZE	
	Valeo NEW **815873**	Connect/Fitting	TYPE PAG100
	Valeo REF.	TYPE A2	QTY 135
	SANDEN	Ømm 132	Valeo **699936**
	TYPE SD7H15	12V	SD 7H15 4643
	CODE 4643, 7849	FITTING ORIENTATION Vertical	
	MOUNT TYPE Ear	FITTING TYPE Rotalock	
	ARMATURE TYPE	FITTING SIZE	
	Valeo NEW **815874**	Connect/Fitting	TYPE PAG100
	Valeo REF.	TYPE PV8	QTY 135
	SANDEN	Ømm 119	Valeo **699936**
	TYPE SD7H15	12V	SD 7H15 4710
	CODE 4710, 7850	FITTING ORIENTATION Vertical	
	MOUNT TYPE Ear	FITTING TYPE Rotalock	
	ARMATURE TYPE	FITTING SIZE	
	Valeo NEW **815875**	Connect/Fitting	TYPE PAG100
	Valeo REF.	TYPE A2	QTY 135
	SANDEN	Ømm 132	Valeo **699936**
	TYPE SD7H15	24V	SD 7H15 7871
	CODE 7871, 8015	FITTING ORIENTATION Horizontal	
	MOUNT TYPE Ear	FITTING TYPE Rotalock	
	ARMATURE TYPE	FITTING SIZE	

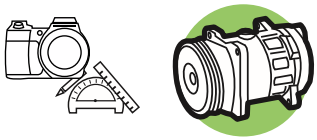

		TECH	
	Valeo NEW **815876**	Connect/Fitting	TYPE PAG100
	REF.	TYPE A2	QTY 135
	SANDEN	Ømm 132	Valeo **699936**
	TYPE SD7H15	24V	SD 7H15 7872
	CODE 7872	FITTING ORIENTATION Vertical	
	MOUNT TYPE Ear	FITTING TYPE Rotalock	
	ARMATURE TYPE	FITTING SIZE	

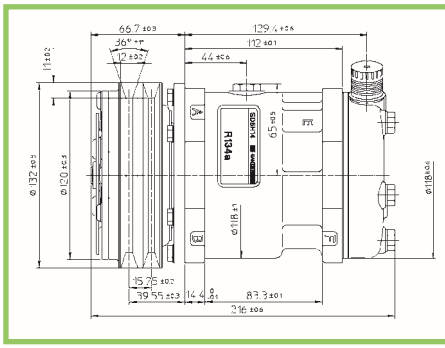

	Valeo NEW **815877**	Connect/Fitting	TYPE PAG100
	REF.	TYPE A2	QTY 210
	SANDEN	Ømm 132	Valeo **699936**
	TYPE SD5H14	12V	SD 5H14 4509
	CODE 4509, 6626	FITTING ORIENTATION Vertical	
	MOUNT TYPE Ear	FITTING TYPE O'Ring	
	ARMATURE TYPE	FITTING SIZE	

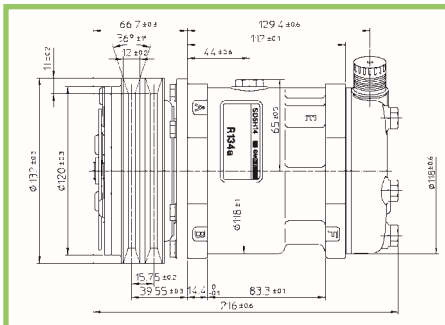

	Valeo NEW **815878**	Connect/Fitting	TYPE PAG100
	REF.	TYPE A2	QTY 210
	SANDEN	Ømm 132	Valeo **699936**
	TYPE SD5H14	24V	SD 5H14 6627
	CODE 6627	FITTING ORIENTATION Vertical	
	MOUNT TYPE Ear	FITTING TYPE O'Ring	
	ARMATURE TYPE	FITTING SIZE	

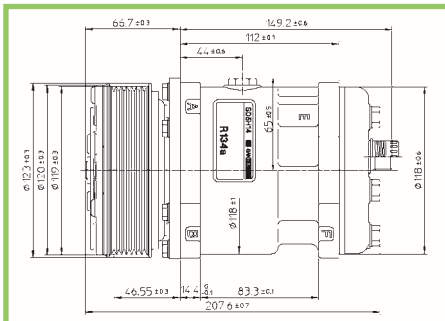

	Valeo NEW **815879**	Connect/Fitting	TYPE PAG100
	REF.	TYPE PV7	QTY 210
	SANDEN	Ømm 119	Valeo **699936**
	TYPE SD5H14	12V	SD 5H14 6628
	CODE 6628	FITTING ORIENTATION Horizontal	
	MOUNT TYPE Ear	FITTING TYPE O'Ring	
	ARMATURE TYPE	FITTING SIZE	

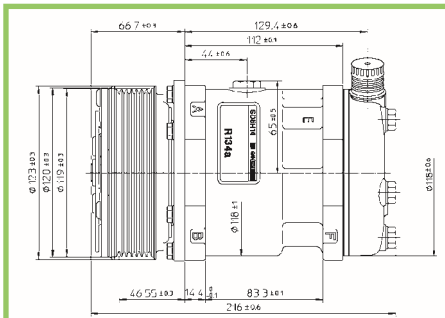

	Valeo NEW **815880**	Connect/Fitting	TYPE PAG100
	REF.	TYPE PV7	QTY 210
	SANDEN	Ømm 119	Valeo **699936**
	TYPE SD5H14	12V	SD 5H14 4514
	CODE 4514, 6629	FITTING ORIENTATION Vertical	
	MOUNT TYPE Ear	FITTING TYPE O'Ring	
	ARMATURE TYPE	FITTING SIZE	

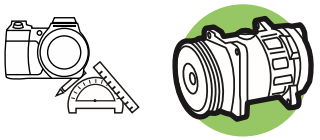

TECH

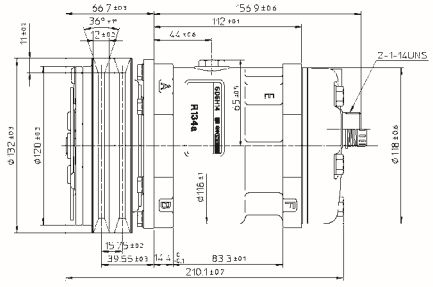

Valeo NEW	815881	Connect/Fitting		TYPE	PAG100
REF.		TYPE	A2	QTY	210
	SANDEN	Ømm	132	Valeo	699936
TYPE	SD5H14		12V		SD 5H14 4513
CODE	4513, 6631	FITTING ORIENTATION	Horizontal		
MOUNT TYPE	Ear	FITTING TYPE	Rotalock		
ARMATURE TYPE		FITTING SIZE			

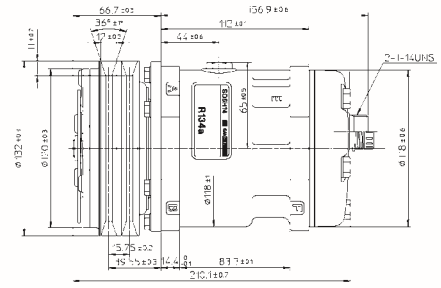

Valeo NEW	815882	Connect/Fitting		TYPE	PAG100
REF.		TYPE	A2	QTY	175
	SANDEN	Ømm	132	Valeo	699936
TYPE	SD5H14		24V		SD 5H14 6632
CODE	6632	FITTING ORIENTATION	Horizontal		
MOUNT TYPE	Ear	FITTING TYPE	Rotalock		
ARMATURE TYPE		FITTING SIZE			

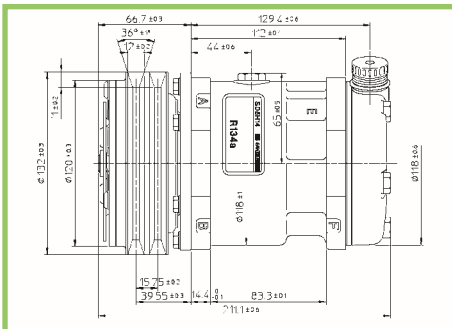

Valeo NEW	815883	Connect/Fitting		TYPE	PAG100
REF.		TYPE	A2	QTY	175
	SANDEN	Ømm	132	Valeo	699936
TYPE	SD5H14		12V		SD 5H14 6642
CODE	6642	FITTING ORIENTATION	Vertical		
MOUNT TYPE	Ear	FITTING TYPE	Rotalock		
ARMATURE TYPE		FITTING SIZE			

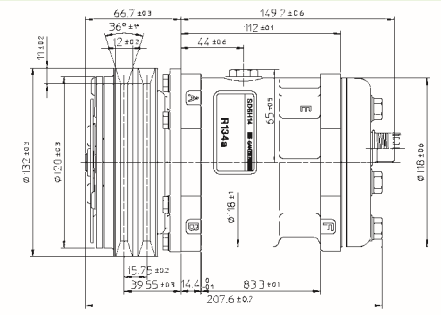

Valeo NEW	815891	Connect/Fitting		TYPE	PAG100
REF.		TYPE	A2	QTY	135
	SANDEN	Ømm	132	Valeo	699936
TYPE	SD5H14		12V		SD 5H14 4536
CODE	4536, 6630	FITTING ORIENTATION	Horizontal		
MOUNT TYPE	Ear	FITTING TYPE	O'Ring		
ARMATURE TYPE		FITTING SIZE			

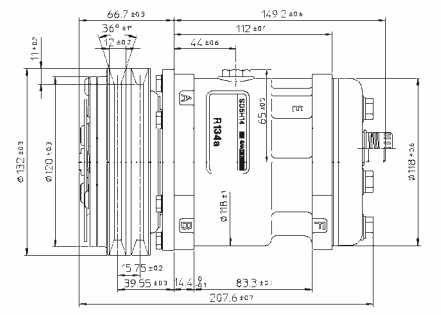

Valeo NEW	815892	Connect/Fitting		TYPE	PAG100
REF.		TYPE	A2	QTY	270
	SANDEN	Ømm	132	Valeo	699936
TYPE	SD5H14		24V		SD 5H14 4537
CODE	4537, 6634	FITTING ORIENTATION	Horizontal		
MOUNT TYPE	Ear	FITTING TYPE	O'Ring		
ARMATURE TYPE		FITTING SIZE			

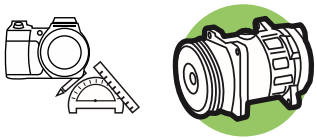

Valeo

		TECH	
Picture not available Image non disponible Imagen no disponible Immagine non disponibile Nicht verfügbares Bild Zdjęcie niedostępne	Valeo NEW **815900** REF. SELTEC TYPE TM13 CODE 435-54210 MOUNT TYPE Ear ARMATURE TYPE	Connect/Fitting TYPE 2AG Ømm 135 12V FITTING ORIENTATION none FITTING TYPE PAD FITTING SIZE	TYPE PAG100 QTY Valeo **699936**
Picture not available Image non disponible Imagen no disponible Immagine non disponibile Nicht verfügbares Bild Zdjęcie niedostępne	Valeo NEW **815901** REF. SELTEC TYPE TM14-15 CODE 435-55210 MOUNT TYPE Ear ARMATURE TYPE	Connect/Fitting TYPE 2AG Ømm 135 12V FITTING ORIENTATION none FITTING TYPE PAD FITTING SIZE	TYPE PAG100 QTY Valeo **699936**
Picture not available Image non disponible Imagen no disponible Immagine non disponibile Nicht verfügbares Bild Zdjęcie niedostępne	Valeo NEW **815902** REF. SELTEC TYPE TM16 CODE 435-56210 MOUNT TYPE Ear ARMATURE TYPE	Connect/Fitting TYPE 2AG Ømm 135 12V FITTING ORIENTATION none FITTING TYPE PAD FITTING SIZE	TYPE PAG100 QTY Valeo **699936**
Picture not available Image non disponible Imagen no disponible Immagine non disponibile Nicht verfügbares Bild Zdjęcie niedostępne	Valeo NEW **815903** REF. SELTEC TYPE TM13 CODE 435-54212 MOUNT TYPE Ear ARMATURE TYPE	Connect/Fitting TYPE 2AG Ømm 135 24V FITTING ORIENTATION none FITTING TYPE PAD FITTING SIZE	TYPE PAG100 QTY Valeo **699936**
Picture not available Image non disponible Imagen no disponible Immagine non disponibile Nicht verfügbares Bild Zdjęcie niedostępne	Valeo NEW **815904** REF. SELTEC TYPE TM14-15 CODE 435-55212 MOUNT TYPE Ear ARMATURE TYPE	Connect/Fitting TYPE 2AG Ømm 135 24V FITTING ORIENTATION none FITTING TYPE PAD FITTING SIZE	TYPE PAG100 QTY Valeo **699936**

Valeo

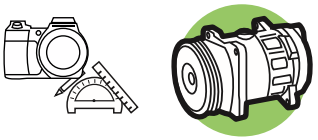

		TECH	
Picture not available Image non disponible Imagen no disponible Immagine non disponibile Nicht verfügbares Bild Zdjęcie niedostępne	Valeo NEW **815905** Valeo REF. SELTEC TYPE TM16 CODE 435-56212 MOUNT TYPE Ear ARMATURE TYPE	Connect/Fitting TYPE 2AG Ø mm 135 24V FITTING ORIENTATION none FITTING TYPE PAD FITTING SIZE	TYPE PAG100 QTY Valeo **699936**
Picture not available Image non disponible Imagen no disponible Immagine non disponibile Nicht verfügbares Bild Zdjęcie niedostępne	Valeo NEW **815906** Valeo REF. SELTEC TYPE TM13 CODE 435-54234 MOUNT TYPE Ear ARMATURE TYPE	Connect/Fitting TYPE 8GR Ø mm 123 12V FITTING ORIENTATION none FITTING TYPE PAD FITTING SIZE	TYPE PAG100 QTY Valeo **699936**
Picture not available Image non disponible Imagen no disponible Immagine non disponibile Nicht verfügbares Bild Zdjęcie niedostępne	Valeo NEW **815907** Valeo REF. SELTEC TYPE TM14-15 CODE 435-55234 MOUNT TYPE Ear ARMATURE TYPE	Connect/Fitting TYPE 8GR Ø mm 123 12V FITTING ORIENTATION none FITTING TYPE PAD FITTING SIZE	TYPE PAG100 QTY Valeo **699936**
Picture not available Image non disponible Imagen no disponible Immagine non disponibile Nicht verfügbares Bild Zdjęcie niedostępne	Valeo NEW **815908** Valeo REF. SELTEC TYPE TM16 CODE 435-56234 MOUNT TYPE Ear ARMATURE TYPE	Connect/Fitting TYPE 8GR Ø mm 123 12V FITTING ORIENTATION none FITTING TYPE PAD FITTING SIZE	TYPE PAG100 QTY Valeo **699936**
Picture not available Image non disponible Imagen no disponible Immagine non disponibile Nicht verfügbares Bild Zdjęcie niedostępne	Valeo NEW **815909** Valeo REF. SELTEC TYPE TM13 CODE 435-54236 MOUNT TYPE Ear ARMATURE TYPE	Connect/Fitting TYPE 8GR Ø mm 123 24V FITTING ORIENTATION none FITTING TYPE PAD FITTING SIZE	TYPE PAG100 QTY Valeo **699936**

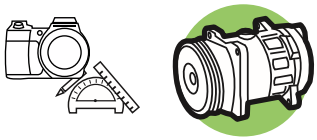

		TECH	
Picture not available Image non disponible Imagen no disponible Immagine non disponibile Nicht verfügbares Bild Zdjęcie niedostępne	Valeo NEW **815910**	Connect/Fitting	TYPE PAG100
	REF.	TYPE 8GR	QTY
	SELTEC	Ømm 123	Valeo **699936**
	TYPE TM14-15	24V	
	CODE 435-55236	FITTING ORIENTATION none	
	MOUNT TYPE Ear	FITTING TYPE PAD	
	ARMATURE TYPE	FITTING SIZE	
Picture not available Image non disponible Imagen no disponible Immagine non disponibile Nicht verfügbares Bild Zdjęcie niedostępne	Valeo NEW **815911**	Connect/Fitting	TYPE PAG100
	REF.	TYPE 8GR	QTY
	SELTEC	Ømm 123	Valeo **699936**
	TYPE TM16	24V	
	CODE 435-56236	FITTING ORIENTATION none	
	MOUNT TYPE Ear	FITTING TYPE PAD	
	ARMATURE TYPE	FITTING SIZE	
	Valeo NEW **815920**	Connect/Fitting	TYPE
	REF.	TYPE	QTY
	SELTEC	Ømm	Valeo
	TYPE Fitting		
	CODE 122-05440	FITTING ORIENTATION Vertical	
	MOUNT TYPE	FITTING TYPE O'Ring	
	ARMATURE TYPE	FITTING SIZE	
	Valeo NEW **815921**	Connect/Fitting	TYPE
	REF.	TYPE	QTY
	SELTEC	Ømm	Valeo
	TYPE Fitting		
	CODE 122-05442	FITTING ORIENTATION Horizontal	
	MOUNT TYPE	FITTING TYPE O'Ring	
	ARMATURE TYPE	FITTING SIZE	
	Valeo NEW **815922**	Connect/Fitting	TYPE
	REF.	TYPE	QTY
	SELTEC	Ømm	Valeo
	TYPE Fitting		
	CODE 122-05446	FITTING ORIENTATION Horizontal	
	MOUNT TYPE	FITTING TYPE Tube "o"	
	ARMATURE TYPE	FITTING SIZE	

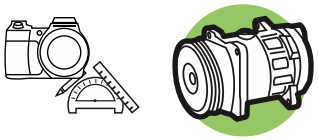

		TECH	
	Valeo NEW **815923**	Connect/Fitting	TYPE
	Valeo REF.	TYPE	QTY
	SELTEC	Ømm	Valeo
	TYPE Fitting		
	CODE 122-05444	FITTING ORIENTATION Vertical	
	MOUNT TYPE	FITTING TYPE Tube "o"	
	ARMATURE TYPE	FITTING SIZE	
	Valeo NEW **815924**	Connect/Fitting	TYPE
	Valeo REF.	TYPE	QTY
	SELTEC	Ømm	Valeo
	TYPE Fitting		
	CODE 122-05441	FITTING ORIENTATION Vertical	
	MOUNT TYPE	FITTING TYPE O'Ring	
	ARMATURE TYPE	FITTING SIZE	
Picture not available Image non disponible Imagen no disponible Immagine non disponibile Nicht verfügbares Bild Zdjęcie niedostępne	Valeo NEW **815947**	Connect/Fitting	TYPE PAG100
	Valeo REF.	TYPE PV8	QTY 135
	SANDEN	Ømm 119	Valeo **699936**
	TYPE SD7H15	12V	
	CODE 7889, 8027	FITTING ORIENTATION Horizontal	
	MOUNT TYPE Ear	FITTING TYPE O'Ring	
	ARMATURE TYPE	FITTING SIZE	
Picture not available Image non disponible Imagen no disponible Immagine non disponibile Nicht verfügbares Bild Zdjęcie niedostępne	Valeo NEW **815948**	Connect/Fitting	TYPE PAG100
	Valeo REF.	TYPE PV8	QTY 135
	SANDEN	Ømm 119	Valeo **699936**
	TYPE SD7H15	24V	
	CODE 8085	FITTING ORIENTATION Horizontal	
	MOUNT TYPE Ear	FITTING TYPE O'Ring	
	ARMATURE TYPE	FITTING SIZE	
	Valeo NEW	Connect/Fitting	TYPE
	Valeo REF.	TYPE	QTY
		Ømm	Valeo
	TYPE		
	CODE	FITTING ORIENTATION	
	MOUNT TYPE	FITTING TYPE	
	ARMATURE TYPE	FITTING SIZE	

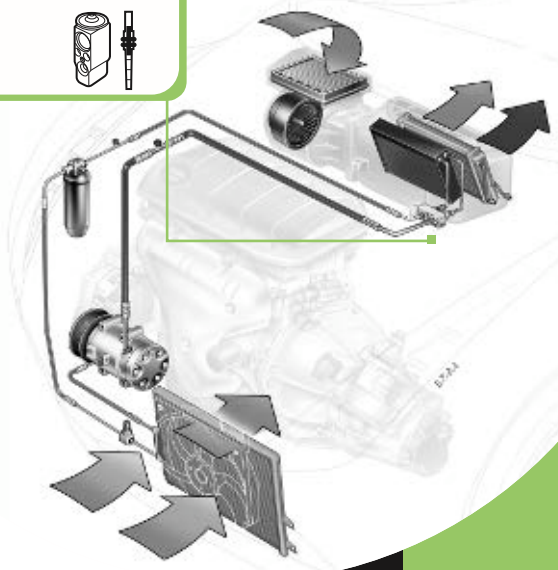

EXPANSION VALVE / ORIFICE TUBE

DÉTENDEUR / ORIFICE CALIBRÉ

EXPANSIONSVENTILVENTIL / FESTDROSSEL

VALVULA DE EXPANSION / ORIFICIO CALIBRADO

VÁLVULA DE EXPANSÃO / ORIFICIO CALIBRADO

VALVOLA D'ESPANSIONE / VALVULA A TUBO D'ESPANSIONE

EXPANSIEVENTIL / ORIFICE TUBE

ZAWÓR ROZPRĘŻNY / DŻAWIK

ТЕРМОРЕГУЛИРУЮЩИЙ ВЕНТИЛЬ (ТРВ) / РАСШИРИТЕЛЬНЫЙ КЛАПАН

EXPANZNÍ VENTIL / PEVNý KRTŽCŽVENTIL

SUPAPĂ EXPANSIUNE / DIUZA INJECTOARE

DETANTÖR / ORIFIS TÜPÜ

Εκτονωτική Βαλβίδα / Στραγγαλιστική βαλβίδα

4.2

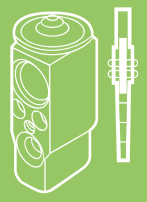

EN

Function
The expansion valve lowers refrigerant pressure and regulates its flow at the evaporator inlet. The expansion results in a drop of pressure and temperature. Its presence is always associated with a receiver-drier. The orifice tube ensures fluid expansion. It does not regulate the flow entering the evaporator. Its presence is always associated with an accumulator.

Replacement
The expansion valve / orifice tube must be replaced after a crash or when replacing any main A/C component (compressor, condenser, hoses, evaporator, filter-drier).

Typical problems with expansion valve :
- Expansion valve blocked in the open or closed position
- Obstruction of the expansion valve due to the presence of impurities or ice
- Gas leak at the bulb (single block)
- Detached bulb (angle)
- Low A/C loop performance due to the incorrect replacement of the expansion valve with an adaptable

Repair recommendations
- Choose the right expansion valve or orifice tube, according to the car manufacturers
- Respect the color code and shape of the orifice tube
- Clean and flush the A/C loop before installation
- Before installation :
  > Clean the surface where the expansion valve or orifice tube is located
  > Use new seals, o'rings and lubricate before replacing the component

FR

Fonction
Le détendeur assure la détente et la chute de température du fluide réfrigérant. Il autorégule le débit entrant dans l'évaporateur. Le détendeur est toujours associé à une bouteille. L'orifice calibré assure la détente et la chute de température du fluide réfrigérant. Il ne régule pas le débit de fluide. L'orifice calibré est toujours associé avec un accumulateur situé en sortie d'évaporateur.

Remplacement
Le détendeur (ou l'orifice calibré) doit être remplacé après un accident ou en cas de remplacement d'un autre élément important du circuit (compresseur, détendeur, condenseur, évaporateur, filtre déshydratant)

Les problèmes les plus typiques des détendeurs/orifices calibrés:
- Détendeur bloqué ouvert ou fermé / Blocage dû à des impuretés ou du givre.
- Fuite de gaz au niveau de la tête du détendeur / Tête détachée
- Mauvaise performance du système du au montage d'une pièce adaptable ou non équivalente à l'origine.

Recommandations Valeo pour la Réparation
- Choisir la bonne référence correspondant à l'application véhicule
- Respecter le code couleur de l'orifice calibré
- Nettoyer le circuit avant montage du nouveau détendeur/orifice calibré.
- Avant installation:
  > Nettoyer les surfaces environnantes
  > Remplacer les joints et les lubrifier avec l'huile spécifiée avant le montage

DE

Funktion
Das Drosselventil dient zur Reduzierung des Kühlmitteldrucks und zur Regulierung des Kühlmittelstroms am Verdampfereingang. Durch die Expansion des Mediums werden Druck und Temperatur gesenkt. Das Ventil wird stets in Verbindung mit einem Trockner eingesetzt.
Die Festdrossel gewährleistet die Expansion des Mediums, nicht aber die Regulierung des Stroms am Verdampfereingang. Es wird stets in Verbindung mit einem Akkumulator eingesetzt.

Austausch
Das Drosselventil bzw. die Festdrossel muss im Fall einer Kollision sowie beim Auswechseln der wichtigsten Klimaanlagen-Elemente (Kompressor, Kondensator, Schläuche, Verdampfer, Filtertrockner) ausgewechselt werden.

Häufige Probleme mit dem Drosselventil:
- Blockierung des Drosselventils in der geöffneten oder geschlossenen Stellung
- Verstopfung des Drosselventils durch Schmutz oder Eis
- Gasleck am Kolben (Einblock) / Gelöster Kolben (Winkelblock)
- Unzureichende Leistung der Klimaanlage, nachdem das Drosselventil durch ein inadäquates Teil ersetzt wurde

Reparaturempfehlungen
- Wählen Sie das adäquate, dem Automobilherstellerteil entsprechende Drosselventil bzw. die entsprechende Festdrossel
- Achten Sie auf die Einhaltung des Farbcodes und die Wahl der richtigen Größe der Festdrossel
- Reinigen und spülen Sie den Klimakreislauf vor dem Installieren mit geeignetem Material
- Vor dem Installieren müssen Sie:
  > die Oberfläche, an der das Drosselventil bzw. die Festdrossel installiert werden soll, säubern
  > die Dichtungen und O-Ringe - die neu sein müssen - einfetten.

SP

Función

La válvula de expansión es un orificio que disminuye la presión del refrigerante y regula su flujo en la entrada del evaporador. La expansión reduce la presión y la temperatura. Su presencia se asocia siempre con un filtro deshidratante. El orificio calibrado efectúa la expansión del fluido, pero no regula el flujo que entra en el evaporador. Su presencia se asocia siempre con un acumulador.

Sustitución

El conjunto válvula de expansión / orificio calibrado debe reemplazarse en caso de avería o cuando se sustituyen componentes de climatización (compresor, condensador, tuberia, evaporador, filtro deshidratante).

Problemas típicos con la válvula de expansión:

- Válvula de expansión bloqueada en posición abierta o cerrada.
- Obstrucción de la válvula de expansión debido a la presencia de impurezas o hielo.
- Fugas de gas en el bulbo (bloque simple) / Desprendimiento del bulbo (ángulo).
- Ineficacia del circuito de climatización debido a la sustitución incorrecta de la válvula de expansión por una adaptable.

Recomendaciones para la reparación

- Elegir la válvula de expansión o el orificio calibrado adecuados, según las indicaciones del constructor del vehículo.

- Respetar el código de color y la forma del orificio calibrado.

- Limpiar y lavar el circuito de climatización con el equipo adecuado antes de la instalación.

- Antes de la instalación:
  > Limpiar la superficie donde se encuentra la válvula de expansión o el orificio calibrado.
  > Utilizar juntas nuevas y lubricarlas antes de reemplazar el componente.

IT

Funzione

La valvola di espansione riduce la pressione del liquido refrigerante e ne regola il flusso in ingresso all'evaporatore. L'espansione produce un calo della pressione e della temperatura del fluido. La sua presenza è sempre associata ad un filtro disidratatore.
La valvola a tubo d'espansione garantisce l'espansione del liquido. Non regola il flusso in entrata nell'evaporatore. La sua presenza è sempre associata ad un accumulatore.

Sostituzione

La valvola di espansione deve essere sostituita in caso di grippaggio del compressore ed in caso di staratura. La valvola a tubo deve essere sostituita sempre quando si sostituisce l'accumulatore .

Problemi più frequenti relativi alla valvola d'espansione:

- La valvola d'espansione è bloccata in posizione aperta o chiusa
- La valvola d'espansione è intasata a causa della presenza di impurità
- Perdita di gas a livello del bulbo (monoblocco) / Bulbo staccato (valvola ad angolo)
- Basso rendimento del circuito di climatizzazione a causa della sostituzione della valvola d'espansione specifica con una adattabile/simile

Raccomandazioni Valeo per la riparazione

- Scegliere la valvola d'espansione o la valvola a tubo di espansione adeguati, conformi alle specifiche del costruttore del veicolo

- Rispettare il codice colore e la forma del tubo di espansione

- Pulire e, nel caso, lavare il circuito dell'aria condizionata con un'attrezzatura adeguata prima del rimontaggio
- Prima di procedere al rimontaggio:
  > Pulire la superficie dove vanno collocati la valvola d'espansione o il tubo d'espansione.
  > Utilizzare guarnizioni nuove e lubrificarle prima di sostituire il componente

NL

Functie

Het expansieventiel is een uitlaat die de druk van het koelmiddel verlaagt en de stroming reguleert aan de ingang van de verdamper. De expansie heeft verlaging van de druk en de temperatuur tot gevolg. Het expansieventiel gaat altijd samen met een vochtafscheider.
De orifice tube maakt de expansie van de vloeistof mogelijk, maar zorgt niet voor regulering van het binnenstromen in de verdamper. De orifice tube gaat altijd samen met een accumulator.

Vervanging

Het expansieventiel / orifice tube moet worden vervangen na een aanrijding of wanneer de hoofdonderdelen van het airconditioningsysteem worden vervangen (compressor, condensor, leidingen, verdamper, droger filter).

Problemen die het meest voorkomen bij expansiekleppen:

- Expansieventiel geblokkeerd in open of gesloten stand
- Expansieventiel verstopt door vuil of ijs
- Gaslek bij de bol (monobloc) / Losse bol (hoek)
- Slechte werking van het airconditioningsysteem doordat het expansieventiel is vervangen door niet goed toepasbaar product

Aanbevelingen bij de reparatie

- Kies het juiste expansieventiel / orifice tube, overeenkomstig de specificaties van de autoconstructeur

- Houd u aan de kleurcode en de vorm van de orifice tube
- Het airconditioningsysteem reinigen en doorspoelen met geschikte apparatuur, voordat u het nieuwe onderdeel monteert

- Voorafgaand aan de montage:
  > Het oppervlak schoonmaken waar het expansieventiel / orifice tube wordt gemonteerd
  > Gebruik nieuwe afdichtingen en O-ringen en smeer ze voordat u het onderdeel vervangt

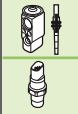

PL

Funkcja

Zawór rozprężny obniża ciśnienie czynnika chłodniczego i reguluje jego przepływ na wlocie parownika. Rozprężanie powoduje spadek ciśnienia i temperatury. Obecność zaworu rozprężnego jest zawsze związana z obecnością filtra osuszacza. Dławik zapewnia rozprowadzanie czynnika. Nie reguluje przepływu na wlocie parownika. Jego obecność jest zawsze związana z obecnością filtra zasobnika.

Wymiana

Zawór rozprężny / dławik należy wymienić po uszkodzeniu w wyniku wypadku lub gdy wymieniany jest jakikolwiek podstawowy element układu A/C (kompresor, skraplacz, przewody, parownik, filtr osuszacz).

Typowe problemy z zaworem rozpr ę nym:

- Zawór rozprężny zablokowany w pozycji otwartej lub zamkniętej
- Zablokowany zawór rozprężny ze względu na obecność zanieczyszczeń lub lodu
- Wyciek czynnika na głowicę zaworu (boczny) / na blok zaworu (kątowy)
- Niska wydajność klimatyzacji ze względu na zastąpienie zaworu rozprężnego nieodpowiednim zamiennikiem

GR

Λειτουργία :

Η βαλβίδα εκτόνωσης είναι ένα στόμιο το οποίο ρίχνει την πίεση του ψυκτικού υγρού και ρυθμίζει τη ροή του προς την είσοδο του εξατμιστή. Η εκτόνωση έχει ως αποτέλεσμα τη πτώση της πίεσης και της θερμοκρασίας. Η παρουσία της σχετίζεται πάντα με ένα ξηραντίρα. Η βαλβίδα αντεπιστροφής εξασφαλίζει την εκτόνωση του ψυκτικού υγρού. Δεν ρυθμίζει τη ροή του προς την είσοδο του εξατμιστή. Η παρουσία της σχετίζεται πάντα με ένα συσσωρευτή.

Αντικατάσταση :

Η βαλβίδα εκτόνωσης/ βαλβίδα αντεπιστροφής πρέπει να αντικατασταθεί σε περίπτωση τρακαρίσματος ή αντικατάστασης των κύριων εξαρτημάτων του κλιματιστικού (συμπιεστής, συμπυκνωτής, εξατμιστής, ξηραντήρα).

Συνηθισμένα προβλήματα της βαλβίδας εκτόνωσης:

- Η βαλβίδα εκτόνωσης έχει μπλοκάρει στην ανοικτή ή κλειστή θέση
- Εμφραξη της βαλβίδας εκτόνωσης λόγω ακαθαρσιών ή πάγου
- Διαρροή στην κεφαλή / της κεφαλής
- Κακή απόδοση οφειλόμενη στην αντικατάσταση της βαλβίδας εκτόνωσης με μια χαμηλότερης ποιότητας

Συστάσεις απο την Valeo για την επισκευή :

- Επιλέξτε την σωστή βαλβίδα εκτόνωσης σύμφωνα με το όχημα

- Λάβετε υπ' όψη σας το χρωματικό κωδικό και το σχήμα της βαλβίδα αντεπιστροφής.

- Καθαρίστε το κύκλωμα κλιματισμού με ενα κατάλληλο μηχάνημα πριν την εγκατάσταση.

- Πριν την εγκατάσταση :
  > Καθαρίστε την επιφάνεια πάνω στην οποία είναι τοποθετημένη η βαλβίδα εκτόνωσης ή η βαλβίδα αντεπιστροφής.
  > Χρησιμοποιήστε καινούργιες τσιμούχες και λιπαίνετε τες.

Détendeur/Orifice calibré
Expansion valve/Orifice tube
Expansionsventil/Festdrossel

Valvula de expansion/Orificio calibrado
Válvula de expansão/Orificio calibrado
Valvola d'espansione/Valvola a tubo d'espansione

Valeo

	A/C				OE	Valeo	
ABARTH							
Nuova 500	+			08/08 ▸	46723601	**509494**	
ALFA ROMEO							
145	+		White/Blanc/Blanco/Weiss (X5)	09/94 ▸ 12/96	60810249	**508970**	
145	+			09/94 ▸ 11/97	60813905	**509490**	
145	+			11/97 ▸ 06/01	60779485	**509678**	
146	+		White/Blanc/Blanco/Weiss (X5)	12/94 ▸ 12/96	60810249	**508970**	
146	+			12/94 ▸ 11/97	60813905	**509490**	
146	+			11/97 ▸ 06/01	60779485	**509678**	
155	+		White/Blanc/Blanco/Weiss (X5)	11/91 ▸ 08/97	60810249	**508970**	
156 (97>2003)	+			09/97 ▸ 03/03	60779304	**509489**	
166 (98>)	+			10/98 ▸ 09/03	60813905	**509490**	
GTV (95>2003)	+			03/95 ▸ 02/03	60779304	**509489**	
Spider (95>2003)	+		White/Blanc/Blanco/Weiss (X5)	02/95 ▸ 02/03	60810249	**508970**	
Spider (2003>)	+			03/03 ▸	60779304	**509489**	
AUDI							
80 (86>95)	+		White/Blanc/Blanco/Weiss (X5)	08/86 ▸ 09/91	443271191A	**508970**	
80 (86>95)	+		Yellow-White/Jaune-Blanc (X5)	09/91 ▸ 07/95	8A0820177AA	**508971**	
90 (87>91)	+		White/Blanc/Blanco/Weiss (X5)	04/87 ▸ 09/91	443271191A	**508970**	
100 (82>90)	+		White/Blanc/Blanco/Weiss (X5)	03/83 ▸ 12/90	443271191A	**508970**	
100 (90>94) ▸ 4AP032003	+		White/Blanc/Blanco/Weiss (X5)	12/90 ▸ 01/93	443271191A	**508970**	
100 (90>94) 4AP060001 ▸	+		Yellow-White/Jaune-Blanc (X5)	01/93 ▸ 07/94	8A0820177AA	**508971**	
200	+		White/Blanc/Blanco/Weiss (X5)	10/79 ▸ 12/90	443271191A	**508970**	
A2 ▸ 8Z-1-060000	+		Yellow-White/Jaune-Blanc (X5)	06/00 ▸	4B0820177	**508971**	
A3 (96>2003)	+			09/96 ▸ 06/03	6N0820679C	**508641**	
A3 (2003>)	+			05/03 ▸	1K0820679	**509901**	
A4 (94>2000)	+		Yellow-White/Jaune-Blanc (X5)	11/94 ▸ 12/00	8A0820177AA	**508971**	
A4 (2000>2004) ▸ 8D-1-200 000	+		Yellow-White/Jaune-Blanc (X5)	12/00 ▸ 09/01	4B0820177	**508971**	
A6 (94>97)	+		Yellow-White/Jaune-Blanc (X5)	07/94 ▸ 09/97	8A0820177AA	**508971**	
A6	+		Yellow-White/Jaune-Blanc (X5)	04/97 ▸ 04/05	4B0820177	**508971**	
A8	+		Yellow-White/Jaune-Blanc (X5)	06/94 ▸ 12/98	4B0820177	**508971**	
Cabriolet ▸ 8G-P-002 901	+		White/Blanc/Blanco/Weiss (X5)	06/91 ▸ 09/92	443271191A	**508970**	
Cabriolet	+		Yellow-White/Jaune-Blanc (X5)	10/92 ▸ 08/00	4B0820177	**508971**	
Coupe (88>96)	+		White/Blanc/Blanco/Weiss (X5)	11/88 ▸ 01/96	443271191A	**508970**	
Coupe (88>96)	+		Yellow-White/Jaune-Blanc (X5)	11/88 ▸ 01/96	8A0820177AA	**508971**	

• **New** Nouveau **Neu** Nuevo **Novo** Nuovo **Nieuw** Nowi **Новый** Novy **Nou** Yeni **Νέους**

	A/C				OE	Valeo	
AUDI (.../...)							
S3 (98>2003)	+			11/98 ▸ 06/03	6N0820679C	**508641**	
S3 (2006>)	+			10/06 ▸	1K0820679	**509901**	
S4	+		Yellow-White/Jaune-Blanc (X5)	10/97 ▸ 09/01	4B0820177	**508971**	
S6 (94>97)	+		Yellow-White/Jaune-Blanc (X5)	07/94 ▸ 10/97	8A0820177AA	**508971**	
S8 (2006>2007)	+			06/06 ▸	4B0820177	**508971**	
TT (98>2006)	+			10/98 ▸ 07/06	6N0820679C	**508641**	
TT (2006>)	+			08/06 ▸	1K0820679	**509901**	
BMW							
3 series E36	+			12/90 ▸ 02/00	64118362851	**509681**	
3 series E36 Compact	+			02/94 ▸ 04/01	64118384379	**509680**	
3 series E46	+			03/98 ▸ 09/98	64118372773	**509796**	
3 series E46	+			09/98 ▸ 03/99	64118381504	**509797**	
3 series E46	+			03/99 ▸	64116904437	**509798**	
5 series E34	+			11/87 ▸ 09/96	64118362851	**509681**	
5 series E39	+			09/95 ▸ 04/04	64118371459	**509679**	
7 series E32	+			09/86 ▸ 05/94	64118362851	**509681**	
7 series E38	+			06/94 ▸ 08/01	64118362851	**509681**	
7 series E38	+			06/94 ▸ 08/01	64118371459	**509679**	
8 series E31	+			09/89 ▸ 01/00	64118362851	**509681**	
M3 E36	+			06/92 ▸ 06/00	64118362851	**509681**	
M3 E46	+			07/00 ▸	64503452759	**509798**	
M5 E34	+			07/88 ▸ 09/95	64118362851	**509681**	
M5 E39	+			07/99 ▸	64116981454	**509679**	
X3 E83	+			10/03 ▸	64116904437	**509798**	
X5 E53	+			01/00 ▸	64118371459	**509679**	
Z3 E36	+			01/96 ▸ 05/00	64118362851	**509681**	
Z3 E36	+			06/00 ▸	64118384379	**509680**	
Z8 E52	+			03/00 ▸	64118371459	**509679**	
CHRYSLER							
	+		Purple/Violet/Violeta/Violett (X5)	07/96 ▸ 12/02	36002432	**508965**	
CITROËN							
AX (91>98) 6536 ▸	+			09/93 ▸ 07/98	6461A3	**508696**	
BX	+		R12>R134a	09/82 ▸ 12/94	95568630	**508690**	
C1	+			06/05 ▸	6461K3	**509968**	
C2	+			09/03 ▸	6461H9	**509511**	

• **New** Nouveau **Neu** Nuevo **Novo** Nuovo **Nieuw** Nowi **Новый** Novy **Nou** Yeni **Νέους**

Détendeur/Orifice calibré
Expansion valve/Orifice tube
Expansionsventil/Festdrossel

Valvula de expansion/Orificio calibrado
Válvula de expansão/Orificio calibrado
Valvola d'espansione/Valvola a tubo d'espansione

Valeo

	A/C				OE	Valeo	
CITROËN (.../...)							
C3 (2002>2005)	+			04/02 ▸ 10/05	6461H9	**509511**	
C3 (2002>2005)	M+			04/02 ▸ 10/05	6461J0	**509851**	
C3 (2005>)	+			11/05 ▸	6461H9	**509511**	
C3 Picasso	+			02/09 ▸	6461L9	**515055**	
C4	+			09/10 ▸	6461L9	**515055**	
C5 (2001>2004)	+			02/01 ▸ 08/04	6461H2	**508705**	
C8	+			06/02 ▸	6461H7	**509854**	
DS4	+			04/11 ▸	6461L9	**515055**	
Evasion (94>2002)	+			07/94 ▸ 05/02	6461A1	**508697**	
Saxo (96>99) ▸7108	+			03/96 ▸ 04/96	6461F7	**508695**	
Saxo (96>)	+			04/96 ▸	6461H3	**508649**	
Synergie (95>2002)	+			10/95 ▸ 05/02	6461A1	**508697**	
Xantia	+		Comp. 6453P9	03/93 ▸ 12/97	6461F6	**508651**	
Xantia	+		Comp. 6453FE	03/93 ▸ 05/02	95667989	**508639**	
Xantia 7309 ▸	+		Comp. 6453X7	03/93 ▸ 05/02	6461G1	**508703**	
XM (89>94) ▸6140	+		R12>R134a	05/89 ▸ 08/93	646191	**508694**	
XM (89>94) 6141 ▸	+			09/93 ▸ 06/94	6461A1	**508697**	
XM (94>2001)	+		2T	07/94 ▸ 07/01	6461A1	**508697**	
XM (94>2001)	+		1,5T	07/94 ▸ 07/01	6461F7	**508695**	
Xsara (97>2000)	+			07/97 ▸ 08/00	6461G9	**509854**	
Xsara (97>2000)	A+			07/97 ▸ 08/00	6461G3	**508645**	
Xsara (2000>)	M+			09/00 ▸	6461G9	**509854**	
Xsara (2000>)	A+			09/00 ▸	6461H3	**508649**	
Xsara Picasso	A+			12/99 ▸	6461G5	**509409**	
Xsara Picasso	A+			01/01 ▸	6461J0	**509851**	
ZX ▸6170	+		R12>R134a	03/91 ▸ 08/93	646191	**508694**	
ZX 6171 ▸	+			09/93 ▸ 07/98	6461A3	**508696**	
CITROËN							
Berlingo (96>2002)	+			07/96 ▸ 12/02	6461A3	**508696**	
Dispatch (95>2003)	+			09/95 ▸ 12/03	6461A3	**508696**	
Dispatch (2004>2006)	+			01/04 ▸	6461A1	**508697**	
Jumpy	+			09/95 ▸	6461A1	**508697**	
FIAT							
Nuova 500	+			07/07 ▸ 06/12	46723601	**509494**	

• **New** Nouveau **Neu** Nuevo **Novo** Nuovo **Nieuw** Nowi **Новый** Novy **Nou** Yeni **Νέους**

	A/C				OE	Valeo	
FIAT (.../...)							
Barchetta	+			05/95 ▸	46721906	**509488**	
Brava	+		(-) JTD	06/95 ▸	46722498	**509490**	
Brava	+		(+) JTD	10/98 ▸	46721906	**509488**	
Bravo	+		(-) JTD	06/95 ▸	46722498	**509490**	
Bravo	+		(+) JTD	10/98 ▸	46721906	**509488**	
Croma	+		R12>R134a	10/85 ▸ 08/93	7794459	**508635**	
Idea (2003>2007)	+			10/03 ▸ 06/07	46723601	**509494**	
Marea	+		1.9 TD / 2.4 TD	07/96 ▸	46722498	**509490**	
Marea	+			02/99 ▸	60815236	**509678**	
Marengo (159) (93>95)	+		White/Blanc/Blanco/Weiss (X5)	02/93 ▸ 01/95	82479336	**508970**	
Marengo (185) (95>)	+			01/95 ▸	46722498	**509490**	
Multipla (98>2003)	+			11/98 ▸	60815236	**509678**	
Palio	+			03/01 ▸ 09/02	46723601	**509494**	
Panda	+			09/03 ▸	46723601	**509494**	
Punto (93>99)	+			07/93 ▸ 09/99	46721906	**509488**	
Punto II (99>2003)	+			07/99 ▸ 06/03	46722958	**509494**	
Stilo (2001>2004)	+			09/01 ▸ 12/03	46723469	**509677**	
Tempra	+		White/Blanc/Blanco/Weiss (X5)	03/93 ▸ 01/96	82479336	**508970**	
Tipo	+		White/Blanc/Blanco/Weiss (X5)	03/93 ▸ 10/95	82479336	**508970**	
Ulysse	+			06/94 ▸ 08/02	9613627780	**508697**	
Ulysse (2002>)	+			09/02 ▸	9464420480	**509854**	
FIAT							
Doblo (2000>2003)	+			10/00 ▸ 12/03	46722958	**509494**	
Ducato (94>2001)	+			02/94 ▸ 12/01	46721906	**509488**	
Ducato (2002>2006)	+			01/02 ▸ 06/06	46722498	**509490**	
Scudo (95>2003)	+			07/95 ▸ 12/03	9613627780	**508697**	
Strada Pick up	+			03/03 ▸ 05/06	46723601	**509494**	
FORD							
Cougar	+		Red/Rouge/Rojo/Rott (X5)	09/98 ▸ 02/01	3856040	**508967**	
Fiesta (95>99)	+		White/Blanc/Blanco/Weiss (X5)	08/95 ▸ 09/99	3456455	**508970**	
Fiesta	+		Green/Vert/Verde/Grün (X5)	08/95 ▸ 03/02	3887675	**509291**	
Fiesta (2005>)	+		Red/Rouge/Rojo/Rott (X5)	10/05 ▸	3856040	**508967**	
Focus (98>2004)	+		Orange-Green/Orange-Vert (X5)	10/98 ▸	3306861	**508968**	
Focus II (2004>)	+		Red/Rouge/Rojo/Rott (X5)	09/04 ▸	3856040	**508967**	
Fusion (2005>)	+		Red/Rouge/Rojo/Rott (X5)	10/05 ▸	3856040	**508967**	
Galaxy (95>)	+			05/95 ▸	1019678	**509688**	
Ka	+		White/Blanc/Blanco/Weiss (X5)	09/96 ▸ 10/02	3456455	**508970**	

• **New** Nouveau **Neu** Nuevo **Novo** Nuovo **Nieuw** Nowi **Новый** Novy **Nou** Yeni **Νέους**

Détendeur/Orifice calibré
Expansion valve/Orifice tube
Expansionsventil/Festdrossel

Valvula de expansion/Orificio calibrado
Válvula de expansão/Orificio calibrado
Valvola d'espansione/Valvola a tubo d'espansione

Valeo

	A/C				OE	Valeo	
FORD (.../...)							
Kuga	+			04/08 ▸ 04/10	3856040	**508967**	
Maverick (2000>)	+			12/00 ▸ 05/06	3306861	**508968**	
Mondeo (93>2000)	+		White/Blanc/Blanco/Weiss (X5)	01/93 ▸ 11/96	3856041	**508966**	
Mondeo (96>2000)	+		Red/Rouge/Rojo/Rott (X5)	08/96 ▸ 08/00	3856040	**508967**	
Puma	+		Green/Vert/Verde/Grün (X5)	05/97 ▸ 12/01	3887675	**509291**	
StreetKa	+			11/02 ▸ 12/05	3856040	**508967**	
FORD							
Transit (2006>)	+			04/06 ▸	3856040	**508967**	
HYUNDAI							
Excel (89>94)	+		Orange-Green/Orange-Vert (X5)	08/89 ▸ 10/94	9772524001	**508968**	
Pony (89>94)	+		Orange-Green/Orange-Vert (X5)	08/89 ▸ 10/94	9772524000	**508968**	
JAGUAR							
	+		White/Blanc/Blanco/Weiss (X5)	03/89 ▸ 09/99		**508970**	
JEEP							
	+		Purple/Violet/Violeta/Violett (X5)	07/96 ▸ 12/02	36002432	**508965**	
LANCIA							
Dedra (89>99)	+		White/Blanc/Blanco/Weiss (X5)	03/89 ▸ 09/99	82479336	**508970**	
Delta (93>99)	+		White/Blanc/Blanco/Weiss (X5)	03/93 ▸ 08/99	82479336	**508970**	
Kappa	+			10/94 ▸ 10/01	46722498	**509490**	
Lybra	+			09/99 ▸	46722498	**509490**	
Phedra	+			09/02 ▸	9464420480	**509854**	
Thema	+		R12>R134a	10/84 ▸ 11/94	7794459	**508635**	
Y	+			11/95 ▸ 09/03	46721906	**509488**	
Zeta	+			10/94 ▸ 08/02	9613627780	**508697**	
MERCEDES							
190 (201)	+		Comp. Fixe/ R12>R134a	12/82 ▸ 08/93	2018300684	**508637**	
200/300 (124)	+		Comp. Fixe/ R12>R134a	12/84 ▸ 06/93	2018300684	**508637**	
A Class (168) (97>2003)	+			05/97 ▸	1688300084	**509493**	
C Class (202)	+			03/93 ▸ 02/01	2028300184	**508643**	
E Class (210)	+			04/95 ▸ 06/99	2028300184	**508643**	
S Class (140) ▸ 133638	+		Comp. Fixe	07/93 ▸	2018300684	**508637**	

• **New** Nouveau **Neu** Nuevo **Novo** Nuovo **Nieuw** Nowi **Новый** Novy **Nou** Yeni **Νέους**

	A/C			2-3	OE	Valeo	
MERCEDES (.../...)							
SLK (R170)	+			08/96 ▸ 03/00	2028300184	**508643**	
V Class (638/2)	+			10/96 ▸ 12/02	2028300184	**508643**	
MERCEDES							
Sprinter (95>)	+			02/95 ▸	2028300184	**508643**	
Vito (96>2003)	+			01/96 ▸ 09/03	2028300184	**508643**	
MINI							
MINI (R56)	+			11/06 ▸	64503452759	**509798**	
NISSAN							
	+		Orange/Naranja (X5)			**509293**	
OPEL							
Astra F (91>98)	+			03/91 ▸ 01/98	1618043	**509687**	
Astra G (98>)	+			02/98 ▸	1618131	**509862**	
Calibra ▸ P1999999	+		White/Blanc/Blanco/Weiss (X5)	09/89 ▸ 05/93	1845404	**508970**	
Calibra	+			06/93 ▸ 07/97	1618043	**509687**	
Corsa B (93>2000)	+			03/93 ▸ 08/00	1618043	**509687**	
Corsa C (2000>2003)	+			09/00 ▸ 08/03	1618192	**509409**	
Omega A (86>94) N1043756 ▸	+		White/Blanc/Blanco/Weiss (X5)	10/86 ▸ 02/94	1845404	**508970**	
Senator A (78>87)	+		White/Blanc/Blanco/Weiss (X5)	06/78 ▸ 02/87	1845404	**508970**	
Senator B (87>93)	+		White/Blanc/Blanco/Weiss (X5)	02/87 ▸ 08/93	1845404	**508970**	
Sintra ▸ VD999999	+		White/Blanc/Blanco/Weiss (X5)	03/96 ▸ 06/97	1845404	**508970**	
Tigra (94>2001)	+			10/94 ▸ 01/01	1618043	**509687**	
Vectra A (88>95)	+		White/Blanc/Blanco/Weiss (X5)	09/88 ▸ 05/93	1845404	**508970**	
Vectra A (88>95)	+			05/93 ▸ 09/95	1618043	**509687**	
Vectra B (95>2002)	+			10/95 ▸ 06/03	1618057	**508650**	
Zafira	+			01/99 ▸ 09/05	1618131	**509862**	
	+		Grey-White/Gris-Blanc (X5)	10/86 ▸ 02/94		**509152**	
	+		Yellow-White/Jaune-Blanc (X5)			**508971**	
	+		Orange-White/Orange-Blanc (X5)			**509293**	
	+		White-Black/Blanc-Noir (X5)			**508964**	
OPEL							
Combo	+			10/01 ▸	1618192	**509409**	

• **New** Nouveau **Neu** Nuevo **Novo** Nuovo **Nieuw** Nowi **Новый** Novy **Nou** Yeni **Νέους**

Détendeur/Orifice calibré
Expansion valve/Orifice tube
Expansionsventil/Festdrossel

Valvula de expansion/Orificio calibrado
Válvula de expansão/Orificio calibrado
Valvola d'espansione/Valvola a tubo d'espansione

Valeo

	A/C				OE	Valeo	
PEUGEOT							
106 (91>96)	+			08/93 ▸ 03/96	6461A3	**508696**	
106 (96>2003)	+			03/96 ▸ 07/03	6461H3	**508649**	
107	+			06/05 ▸	6461K3	**509968**	
205	+		R12>R134a	02/83 ▸ 08/93	6461G7	**508690**	
206	+			09/98 ▸	6461G5	**509409**	
206 SW	+			05/02 ▸	6461J0	**509851**	
206 SW	+			05/02 ▸	6461G5	**509409**	
206+	+			03/09 ▸ 11/09	6461G5	**509409**	
206+	+			10/10 ▸	6461H3	**508649**	
207	+			03/06 ▸	6461K6	**509959**	
305	+		R12>R134a	11/77 ▸ 06/90	646164	**508690**	
307 (2001>2004)	+			03/01 ▸	6461H5	**509851**	
308	+			09/07 ▸	6461L9	**515055**	
309 (85>94)	+		R12>R134a	08/85 ▸ 08/94	6461G7	**508690**	
405	+		R12>R134a	06/87 ▸ 08/93	6461J2	**508694**	
405	+			09/93 ▸ 10/96	6461A3	**508696**	
406 7903 ▸	+			06/98 ▸ 10/04	6461G8	**508801**	
406	+			04/99 ▸ 10/04	6461H3	**508649**	
407	+			04/04 ▸ 03/08	6461J7	**509969**	
505	+		R12>R134a	08/79 ▸ 12/90	6461G7	**508690**	
508	+			01/11 ▸	6461P7	•**515140**	
604	+			▸ 12/86	6461G7	**508690**	
605 (89>94)	+		R12>R134a	10/89 ▸ 08/93	6461J2	**508694**	
605 (89>94)	+			09/93 ▸ 06/94	6461A1	**508697**	
605 (94>99)	+		2T	07/94 ▸ 05/99	6461A1	**508697**	
605 (94>99)	+			07/94 ▸ 05/99	6461A3	**508696**	
605 (94>99)	+		1,5T	07/94 ▸ 05/99	6461F7	**508695**	
607 (2000>2004)	+			05/00 ▸ 09/04	6461H3	**508649**	
806	+			07/94 ▸ 05/02	6461A1	**508697**	
807	+			06/02 ▸	6461H7	**509854**	
RCZ	+			05/10 ▸	6461L9	**515055**	
PEUGEOT							
Expert	+			09/95 ▸ 12/06	6461A1	**508697**	
Expert II	+			01/07 ▸	6461H7	**509854**	
Partner (96>2002)	+			06/96 ▸ 11/02	6461A3	**508696**	
Ranch (96>2002)	+			06/96 ▸ 11/02	6461A3	**508696**	

• **New** Nouveau **Neu** Nuevo **Novo** Nuovo **Nieuw** Nowi **Новый** Novy **Nou** Yeni **Νέους**

	A/C				OE	Valeo	
RENAULT							
R19	+		R12>R134a	07/88 ▸ 11/95	7701033537	**508694**	
R19	+		R12>R134a	07/88 ▸ 11/95	7701039601	**508704**	
R21	+		R12>R134a	01/89 ▸ 08/95	7701040493	**508698**	
Clio II ▸ 990305	+			03/98 ▸ 03/99	7701046080	**508866**	
Clio II 990305 ▸	+			03/99 ▸	7701206357	**508833**	
Mégane ▸ 970704	+			11/95 ▸ 06/97	7701040563	**508644**	
Mégane 970704 ▸	+			07/97 ▸ 07/02	7701044611	**508705**	
Mégane Scénic ▸ 001222	+			10/96 ▸ 12/00	7701041787	**508646**	
Mégane Scénic 980103 ▸	+			01/98 ▸ 04/03	7701044611	**508705**	
Modus	+			09/04 ▸ '08/05	7701060024	**509777**	
Safrane	+		R12>R134a	05/92 ▸ 07/95	7701033537	**508694**	
Safrane	+			05/92 ▸ 07/95	7701039601	**508704**	
Safrane	+			07/95 ▸ 11/00	7701041340	**508648**	
Thalia	+			10/08 ▸	7701206357	**508833**	
Twingo	+			03/98 ▸ 08/04	7701046085	**509684**	
RENAULT							
Kangoo (97>2003) ▸ 000327	+			09/97 ▸ 03/00	7701044611	**508705**	
Kangoo (97>2003) 991105 ▸	+			11/99 ▸ 02/03	7701206357	**508833**	
Kangoo (97>2003)	+			03/00 ▸ 02/03	7701046080	**508866**	
Master (97>2003)	+			09/97 ▸ 09/03	7701044164	**508651**	
ROVER							
25 (99>2003) ▸ 633529	+			12/99 ▸ 01/00	JQD100270	**508652**	
25 (99>2003) ▸ 634461	+			12/99 ▸ 01/00	JQD100230	**508648**	
45 (2000>2004)	+			01/00 ▸ 05/04	JQD100230	**508648**	
200 (95>99)	+			11/95 ▸ 11/99	JQD100230	**508648**	
200 (95>99)	+			11/95 ▸ 11/99	JQD100270	**508652**	
200 coupe, cab (96>99)	+			03/96 ▸	JQD100230	**508648**	
400 (95>) ▸ 544808	+			05/95 ▸ 01/00	JQD100230	**508648**	
SAAB							
9-3 (98>2003)	+			04/98 ▸ 05/03	4758686	**509495**	

• **New** Nouveau **Neu** Nuevo **Novo** Nuovo **Nieuw** Nowi **Новый** Novy **Nou** Yeni **Νέους**

Détendeur/Orifice calibré
Expansion valve/Orifice tube
Expansionsventil/Festdrossel

Valvula de expansion/Orificio calibrado
Válvula de expansão/Orificio calibrado
Valvola d'espansione/Valvola a tubo d'espansione

Valeo

	A/C				OE	Valeo	
SAAB (.../...)							
9-5 (97>2001)	+			09/97 ▸ 08/01	4633681	**508648**	
900 (79>93)	+		R12>R134a	09/83 ▸ 06/93	9480914	**508635**	
900 (93>)	+			07/93 ▸ 02/98	4635199	**508642**	
9000	+		R12>R134a	06/84 ▸ 06/91	9480914	**508635**	
9000	+			07/91 ▸ 07/98	4319158	**508637**	
SEAT							
Alhambra	+			03/96 ▸	7M0820679A	**509688**	
Altea	+			03/04 ▸	1K0820679	**509901**	
Arosa	+			02/97 ▸	6N0820679C	**508641**	
Cordoba (93>2002) ▸ 6K-X-420 000	+			11/93 ▸ 08/02	6N0820679C	**508641**	
Cordoba (2002>) ▸ 6L-3-127 000	+			09/02 ▸	6Q0820679	**509682**	
Ibiza (93>99)	+			02/93 ▸ 01/99	6N0820679A	**508641**	
Ibiza (99>2001) ▸ 6K-X-420 000	+			03/99 ▸ 11/01	6N0820679C	**508641**	
Ibiza (2001>)	+			09/01 ▸	6Q0820679A	**509682**	
Leon	+			08/99 ▸	6N0820679C	**508641**	
Leon II	+			07/05 ▸	1K0820679	**509901**	
Toledo (91>98)	+		R12>R134a	02/91 ▸ 11/93	191820679	**508690**	
Toledo (91>98) ▸ 1L-ZD308 451 ▸ 1L-TR022 311	+			10/93 ▸ 01/96	6N0820679C	**508641**	
Toledo (98>2004)	+			02/99 ▸ 07/04	6N0820679C	**508641**	
Toledo (2004>)	+			09/04 ▸	1K0820679	**509901**	
SEAT							
Inca	+			11/95 ▸ 06/03	6N0820679C	**508641**	
SKODA							
Fabia	+			10/99 ▸	6Q0820679	**509682**	
Octavia (96>2004)	+			10/96 ▸	6N0820679C	**508641**	
Octavia (2004>)	+			05/04 ▸	1K0820679	**509901**	
Roomster	+			03/06 ▸	6Q0820679A	**509682**	
Superb	+		Yellow-White/Jaune-Blanc (X5)	12/01 ▸	4B0820177	**508971**	
SMART							
ForTwo	+			10/98 ▸	0001266V002000000	**509685**	
Crossblade	+			06/02 ▸	0001266V002000000	**509685**	
Roadster	+			05/03 ▸	0001266V002000000	**509685**	

• **New** Nouveau **Neu** Nuevo **Novo** Nuovo **Nieuw** Nowi **Новый** Novy **Nou** Yeni **Νέους**

	A/C				OE	Valeo	
TOYOTA							
4 Runner (180)	+			11/95 ▸	8851520100	**509491**	
Avensis (97>2003)	+			10/97 ▸ 01/03	8851520100	**509491**	
Aygo	+			02/05 ▸	885150H010	**509968**	
Camry (96>2001)	+			08/96 ▸ 07/01	8851520100	**509491**	
Carina E (92>97)	+			02/92 ▸ 12/97	8851520100	**509491**	
Corolla (100)	+			05/92 ▸ 04/97	8851533010	**509492**	
Corolla (110)	+			04/97 ▸ 10/01	8851520100	**509491**	
Land Cruiser (BJ80)	+			01/90 ▸ 01/98	8851520100	**509491**	
Land Cruiser (KZ/VZ9)	+			04/96 ▸ 09/02	8851520100	**509491**	
MR 2 (AW20)	+			11/93 ▸ 08/99	8851520100	**509491**	
Paseo (95>99)	+			08/95 ▸ 07/99	8851520100	**509491**	
Previa	+			05/90 ▸	8851520100	**509491**	
RAV4 (94>2000)	+			04/94 ▸ 07/00	8851520100	**509491**	
Starlet (EP91) (96>)	+			01/96 ▸ 07/99	8851520100	**509491**	
Yaris	+			01/99 ▸	8851552020	**509863**	
TOYOTA							
Hiace (RCH/LXH 10-20)	+			08/95 ▸ 05/06	8851520100	**509491**	
VAUXHALL							
Astra III (91>98)	+			09/91 ▸ 03/98	52464434	**509687**	
Astra IV (98>)	+			04/98 ▸	9117114	**509862**	
Calibra ▸P1999999	+		White/Blanc/Blanco/Weiss (X5)	09/89 ▸ 05/93	1845404	**508970**	
Calibra R1000001 ▸	+			06/93 ▸ 07/97	52464434	**509687**	
Cavalier III (88>95)	+			10/88 ▸ 10/95	52464434	**509687**	
Corsa I (93>2000)	+			04/93 ▸ 08/00	52464434	**509687**	
Corsa II (2000>2003)	+			09/00 ▸ 08/03	9196195	**509409**	
Omega	+			04/94 ▸	9119416	**509687**	
Senator	+		White/Blanc/Blanco/Weiss (X5)	09/87 ▸ 08/93	52460909	**508970**	
Sintra ▸VD999999	+		White/Blanc/Blanco/Weiss (X5)	03/96 ▸ 06/97	52460909	**508970**	
Tigra	+			11/94 ▸ 01/01	52464434	**509687**	
Vectra (95>2002)	+			10/95 ▸ 03/02	90512364	**508650**	
Zafira	+			01/99 ▸ 09/05	9117114	**509862**	
	+		Grey-White/Gris-Blanc (X5)	10/86 ▸ 02/94		**509152**	
	+		Yellow-White/Jaune-Blanc (X5)			**508971**	
	+		Orange-White/Orange-Blanc (X5)			**509293**	
	+		White-Black/Blanc-Noir (X5)			**508964**	

• **New** Nouveau **Neu** Nuevo **Novo** Nuovo **Nieuw** Nowi **Новый** Novy **Nou** Yeni **Νέους**

Détendeur/Orifice calibré
Expansion valve/Orifice tube
Expansionsventil/Festdrossel

Valvula de expansion/Orificio calibrado
Válvula de expansão/Orificio calibrado
Valvola d'espansione/Valvola a tubo d'espansione

Valeo

	A/C				OE	Valeo	
VAUXHALL							
Combo	+			10/93 ▸ 09/01	52464434	**509687**	
VOLKSWAGEN							
Bora	+			09/98 ▸	6N0820679C	**508641**	
Corrado ▸ 50-N-020000	+		R12>R134a	09/88 ▸ 07/92	191820679	**508690**	
Corrado	+			08/92 ▸ 07/95	6N0820679C	**508641**	
Eos	+			05/06 ▸	1K0820679	**509901**	
Fox	+			11/04 ▸	6Q0820679A	**509682**	
Golf II (83>91)	+		R12>R134a	08/83 ▸ 10/91	191820679	**508690**	
Golf II (83>91)	+			08/85 ▸ 10/91	6N0820679C	**508641**	
Golf II Cabriolet (93>98)	+			09/93 ▸ 12/97	1H0820679A	**508648**	
Golf II Cabriolet (93>98)	+			09/93 ▸ 02/98	6N0820679C	**508641**	
Golf II Cabriolet (93>98)	+			01/98 ▸ 02/98	191820679	**508690**	
Golf III (91>97) ▸ 1H-N-990 000	+			11/91 ▸ 08/92	1H0820679	**508648**	
Golf III (91>97) 1H-P-000 001 ▸	+			08/92 ▸ 10/97	6N0820679C	**508641**	
Golf III Cabriolet (98>2002) 1H-P-000 001 ▸	+			03/98 ▸ 04/02	6N0820679C	**508641**	
Golf IV (97>2003)	+			10/97 ▸ 10/03	6N0820679C	**508641**	
Golf V (2003>2008)	+			10/03 ▸ 09/08	1K0820679	**509901**	
Golf VI (2008>)	+			10/08 ▸	1K0820679	**509901**	
Golf Plus	+			01/05 ▸	1K0820679	**509901**	
Jetta II (83>92)	+		R12>R134a	08/83 ▸ 11/92	191820679	**508690**	
Jetta (2005>)	+			08/05 ▸	1K0820679	**509901**	
Lupo	+			10/98 ▸	6N0820679C	**508641**	
New Beetle (98>2011)	+			01/98 ▸ 06/11	6N0820679C	**508641**	
New Beetle (2011>)	+			07/11 ▸	1H0820679	**508648**	
Passat (88>93) ▸ 31-NE-400 000	+		R12>R134a	04/88 ▸ 07/92	191820679	**508690**	
Passat (88>93) 31P-000001 ▸	+		R12>R134a	04/88 ▸ 10/93	6N0820679C	**508641**	
Passat (88>93) 31PB000001 ▸	+		R12>R134a	06/91 ▸ 10/93	1H0820679A	**508648**	
Passat (93>97)	+			10/93 ▸ 05/97	6N0820679C	**508641**	
Passat (96>2004)	+		Yellow-White/Jaune-Blanc (X5)	10/96 ▸ 12/04	4B0820177	**508971**	
Passat (2005>)	+			03/05 ▸	1K0820679	**509901**	
Phaeton	+			05/02 ▸ 05/10	4B0820177	**508971**	
Polo (94>2001)	+			10/94 ▸ 09/01	6N0820679C	**508641**	
Polo (2001>2004)	+			11/01 ▸ 05/05	6Q0820679A	**509682**	
Polo (2005>)	+			04/05 ▸	6Q0820679A	**509682**	

• **New** Nouveau **Neu** Nuevo **Novo** Nuovo **Nieuw** Nowi **Новый** Novy **Nou** Yeni **Νέους**

	A/C			2-3	OE	Valeo	
VOLKSWAGEN (.../...)							
Sharan	+			08/95 ▸	7M0820679A	**509688**	
Tiguan	+			11/07 ▸	1K0820679	**509901**	
Touran	+			02/03 ▸	1K0820679	**509901**	
Vento ▸ 1H-N-990 000	+			11/91 ▸ 08/92	1H0820679	**508648**	
Vento 1H-P-000 001 ▸	+			08/92 ▸ 12/97	6N0820679C	**508641**	
VOLKSWAGEN							
Caddy (95>2004)	+			11/95 ▸ 06/03	6N0820679C	**508641**	
Caddy II (2004>)	+			02/04 ▸	1K0820679	**509901**	
Transporter (F70) (90>96) ▸ 70-N-120 000	+		R12>R134a	09/90 ▸ 04/92	701820679	**508694**	
Transporter (F70) (90>96) 70-N-120 001 ▸	+			04/92 ▸ 05/96	701820679E	**508645**	
VOLVO							
740-760-780	+		White/Blanc/Blanco/Weiss (X5)	02/82 ▸ 08/94	13248299	**508970**	
850	+		Yellow-White/Jaune-Blanc (X5)	06/91 ▸ 12/96	35450865	**508971**	
940-960	+		White/Blanc/Blanco/Weiss (X5)	09/90 ▸ 08/93	13248299	**508970**	
940-960	+		Yellow-White/Jaune-Blanc (X5)	08/91 ▸ 12/96	35450865	**508971**	

KIT 699930

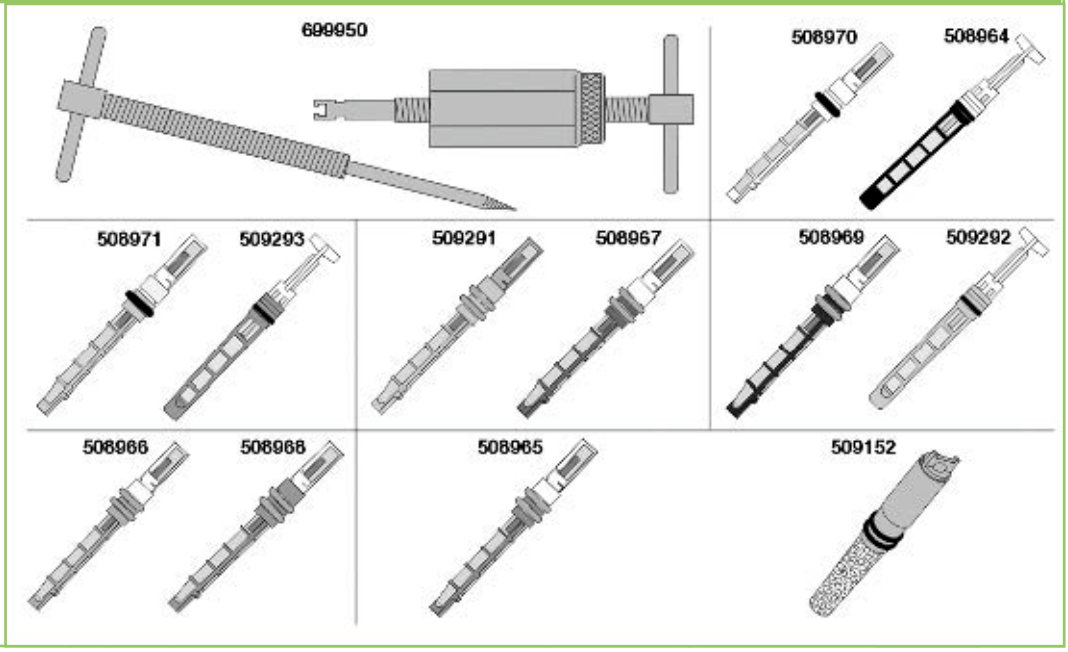

• **New** Nouveau **Neu** Nuevo **Novo** Nuovo **Nieuw** Nowi **Новый** Novy **Nou** Yeni **Νέους**

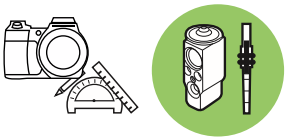

Valeo 508635

FIAT	7794459
LANCIA	7794459
SAAB	9480914

Valeo 508637

MERCEDES	2018300684
SAAB	4319158

Valeo 508639

CITROËN	95667989

Valeo 508641

SEAT	6N0820679A
SEAT	6N0820679C
VOLKSWAGEN	6N0820679A
VOLKSWAGEN	6N0820679C

Valeo 508642

SAAB	4635199

Valeo 508643

MERCEDES	2028300184

Valeo 508644

RENAULT	7701040563

Valeo 508645

CITROËN	6461G3
VOLKSWAGEN	701820679E

Valeo 508646

RENAULT	7701041787

Valeo 508648

RENAULT	7701041340
ROVER	JQD100230
SAAB	4633681
VOLKSWAGEN	1H0820679
VOLKSWAGEN	1H0820679A

Valeo 508649

CITROËN	6461H3
PEUGEOT	6461H3

Valeo 508650

OPEL	1618057
VAUXHALL	90512364

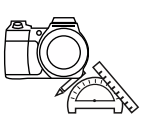

Valeo 508651

CITROËN	6461F6
RENAULT	7701044164

Valeo 508695

CITROËN	6461F7
PEUGEOT	6461F7

Valeo 508703

CITROËN	6461G1

Valeo 508652

ROVER	JQD100270

Valeo 508696

CITROËN	6461A3
PEUGEOT	6461A3

Valeo 508704

RENAULT	7701039601

Valeo 508690

CITROËN	95568630
PEUGEOT	646164
PEUGEOT	6461G7
SEAT	191820679
VOLKSWAGEN	191820679

Valeo 508697

CITROËN	6461A1
FIAT	9613627780
LANCIA	9613627780
PEUGEOT	6461A1

Valeo 508705

RENAULT	7701044611

Valeo 508694

CITROËN	646191
PEUGEOT	646191
PEUGEOT	6461J2
RENAULT	7701033537
VOLKSWAGEN	701820679

Valeo 508698

RENAULT	7701040493

Valeo 508801

PEUGEOT	6461G8

Valeo 508833

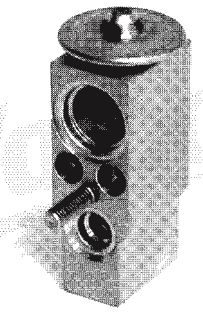

RENAULT	7701206357

Valeo 508866

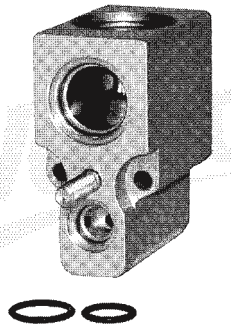

RENAULT	7701046080

Valeo 508964

WHITE - BLACK

OPEL	
VAUXHALL	

Valeo 508965

PURPLE

CHRYSLER	36002432
JEEP	36002432

Valeo 508966

WHITE

FORD	3856041
NISSAN	6899284

Valeo 508967

RED

FORD	3856040
MAZDA	3856040

Valeo 508968

ORANGE - GREEN

FORD	3306861
HYUNDAI	9772524000
HYUNDAI	9772524001

Valeo 508970

WHITE

ALFA ROMEO	60810249
AUDI	443271191A
FIAT/ LANCIA	82479336
FORD/ VOLVO	3456455/ 13248299
OPEL/ VAUXHALL	1845404/ 52460909

Valeo 508971

YELLOW - WHITE

AUDI	8A0820177AA
AUDI/ VW	4B0820177
VOLVO	35450865

Valeo 509152

GREY - WHITE

OPEL	
VAUXHALL	

Valeo 509291

GREEN

FORD	3887675

Valeo 509293

ORANGE - WHITE

NISSAN	
OPEL	
VAUXHALL	

Valeo 509409

CITROËN	6461G5
OPEL	1618192
PEUGEOT	6461G5
VAUXHALL	9196195

Valeo 509488

FIAT	46721906
LANCIA	46721906

Valeo 509489

ALFA ROMEO	60779304

Valeo 509490

ALFA ROMEO	60813905
FIAT	46722498
LANCIA	46722498

Valeo 509491

TOYOTA	8851520100

Valeo 509492

TOYOTA	8851533010

Valeo 509493

MERCEDES	1688300084

Valeo 509494

FIAT	46722958

Valeo 509495

SAAB	4758686

Valeo 509511

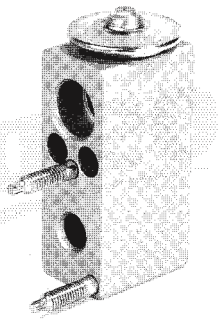

CITROËN	6461H9

Valeo 509677

FIAT	46723469

Valeo 509678

ALFA ROMEO	60779485
FIAT	60815236

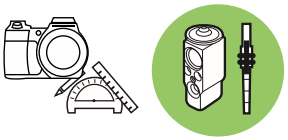

Valeo 509679

BMW	64118371459

Valeo 509684

RENAULT	7701046085

Valeo 509777

RENAULT	7701060024

Valeo 509680

BMW	64118384379

Valeo 509685

SMART	0001266V002000000

Valeo 509796

BMW	64118372773

Valeo 509681

BMW	64118362851

Valeo 509687

OPEL	1618043
VAUXHALL	'52464434

Valeo 509797

BMW	64118381504

Valeo 509682

SEAT	6Q0820679/A
SKODA	6Q0820679/A
VOLKSWAGEN	6Q0820679A

Valeo 509688

FORD	1019678
SEAT	7M0820679A
VOLKSWAGEN	7M0820679A

Valeo 509798

BMW	64116904437

Valeo 509851

PEUGEOT	6461H5
PEUGEOT	6461J0

Valeo 509901

AUDI	1K0820679
SEAT	1K0820679
SKODA	1K0820679
VOLKSWAGEN	1K0820679

Valeo 515055

PEUGEOT	6461L9

Valeo 509854

CITROËN	6461G9
FIAT/ LANCIA	9464420480
PEUGEOT	6461G9

Valeo 509959

PEUGEOT	6461K6

Valeo 515140

PEUGEOT	515140

Valeo 509862

OPEL	1618131
VAUXHALL	9117114

Valeo 509968

CITROËN	6461K3
PEUGEOT	6461K3
TOYOTA	885150H010

Valeo 509863

TOYOTA	8851552020

Valeo 509969

Picture not available
Image non disponible
Nicht verfügbares Bild
Imagen no disponible
Immagine non disponibile
Zdjęcie niedostępne

PEUGEOT	6461J7

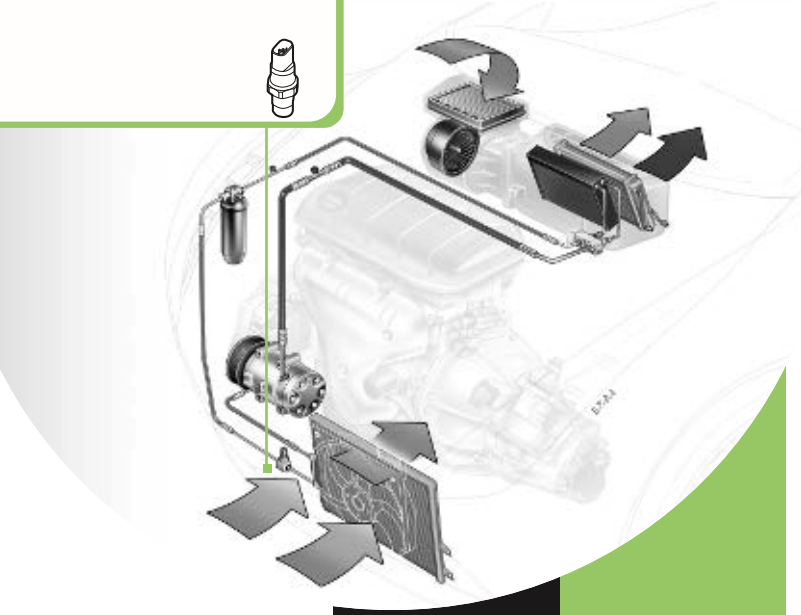

PRESSURE SWITCH

PRESSOSTAT

DRUCKSCHALTER

PRESOSTATO

PRESSOSTATO

PRESSOSTATO

DRUKSCHAKELAAR

CZUJNIK CIŚNIENIA

ДАТЧИК ДАВЛЕНИЯ

TLAKOVý SPŽNAČ

COMUTATOR INALTA PRESIUNE

B SINÇ MÜŞIRI

Πιεσοστατική

4.3

	A/C				OE	Valeo
ALFA ROMEO						
145	+		Trinary	09/94 ▸ 12/96	60810323	**508655**
145	+		Low pressure switch	09/94 ▸ 12/96	60811865	**509474**
145	+		4 levels/ Black	12/96 ▸ 06/01	60625482	**509476**
146	+		Low pressure switch	12/94 ▸ 12/96	60811865	**509474**
146	+		Trinary	12/94 ▸ 12/96	60810323	**508655**
146	+		4 levels/ Black	12/96 ▸ 06/01	60625482	**509476**
147	+		4 levels/ Black	10/00 ▸	60625482	**509476**
155	+		Low pressure switch	03/95 ▸ 08/97	60811865	**509474**
156	+		4 levels/ Black	09/97 ▸	60625482	**509476**
164	+		Trinary	09/92 ▸ 09/98	60810323	**508655**
GTV	+		Trinary	03/95 ▸	60810323	**508655**
GTV	+		4 levels/ Black	02/97 ▸ 02/03	60625482	**509476**
Spider	+		4 levels/ Black	02/95 ▸	60625482	**509476**
Spider	+		Low pressure switch	02/95 ▸ 05/98	60811865	**509474**
Spider	+		Trinary	02/95 ▸ 02/03	60810323	**508655**
AUDI						
A1 (2010>)	+		Pressure sensor	05/10 ▸	1K0959126D	**509662**
A2	+		Pressure sensor	06/00 ▸	8Z0959126	**509662**
A3	+		Trinary	09/96 ▸ 06/03	1H0959139B	**509477**
A3	+		Pressure sensor	09/96 ▸ 06/03	1K0959126B	**509662**
A4 (94>2001)	+		Trinary	11/94 ▸ 09/01	8D0959482B	**509661**
A4 (2001>2003)	+		Pressure sensor	01/01 ▸ 12/04	8Z0959126	**509662**
A6 (97>2001)	+		Trinary	04/97 ▸ 05/01	8D0959482B	**509661**
A6 (2001>2005)	+		Pressure sensor	06/01 ▸ 04/05	1K0959126B	**509662**
A6 Allroad	+		Trinary	05/00 ▸ 05/03	8D0959482B	**509661**
Q7	+		Pressure sensor	03/06 ▸	1K0959126B	**509662**
S3	+		Trinary	11/98 ▸ 06/03	1H0959139B	**509477**
S3	+		Pressure sensor	11/98 ▸ 06/03	1K0959126B	**509662**
S4	+		Trinary	10/97 ▸ 09/01	8D0959482B	**509661**
S6	+		Trinary	09/99 ▸	8D0959482B	**509661**
TT ▸ 8N-Y-065480	+		Trinary	10/98 ▸ 01/00	1H0959139B	**509477**
TT	+		Pressure sensor	02/00 ▸	1K0959126B	**509662**
BMW						
1 series E87	+			09/04 ▸	64536909257	**509864**
3 series E21	+		Binary	01/77 ▸ 01/81	64538390971	**508817**
3 series E30	+		Binary	09/82 ▸ 09/93	64538390971	**508817**

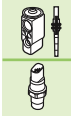

• **New** Nouveau **Neu** Nuevo **Novo** Nuovo **Nieuw** Nowi **Новый** Novy **Nou** Yeni **Νέους**

Pressostat
Pressure switch
Druckschalter

Presostato
Pressostato
Pressostato

Drukschakelaar
Czujnik ci nienia
ДАТЧИК ДАВЛЕНИЯ

Tlakový spínač
Comutator inalta presiune
Basinç müşiri
Πιεσοστατική

Valeo

	A/C				OE	Valeo
BMW (.../...)						
3 series E36	+		Trinary	01/95 ▸ 04/01	64538362055	**508814**
3 series E46	+			03/98 ▸	64536909257	**509864**
3 series E90/E91/E92	+			05/05 ▸	64536909257	**509864**
5 series E34	+		Trinary	01/88 ▸ 09/96	64531390070	**508815**
5 series E39	+		Trinary	09/95 ▸ 09/98	64538391639	**508818**
5 series E39	+			09/98 ▸ 04/04	64536909257	**509864**
5 series E60	+			05/03 ▸	64536909257	**509864**
6 series E63/E64	+			09/03 ▸	64536909257	**509864**
7 series E32	+		Trinary	09/86 ▸ 05/94	64531390070	**508815**
7 series E38	+		Trinary	06/94 ▸ 09/98	64538391639	**508818**
7 series E38	+			09/98 ▸ 08/01	64536909257	**509864**
7 series E65/E66	+			09/01 ▸ 02/05	64536909257	**509864**
M3 E30			Binary	09/86 ▸ 06/91	64538390971	**508817**
M3 E36			Trinary	01/95 ▸ 06/00	64538362055	**508814**
M3 E46				07/00 ▸	64536909257	**509864**
M5 E34			Trinary	07/88 ▸ 09/95	64531390070	**508815**
M5 E39				07/99 ▸	64536909257	**509864**
X3 E83	+			10/03 ▸	64536909257	**509864**
X5 E53	+			01/00 ▸	64536909257	**509864**
X6 E71				05/08 ▸	64539141957	**509864**
Z3 E36	+		Trinary	01/96 ▸	64538362055	**508814**
Z4 E85/E86	+			09/02 ▸	64536909257	**509864**
CITROËN						
AX	+		Trinary	05/91 ▸ 07/96	6455L1	**509483**
AX	+		Trinary	05/91 ▸ 07/98	6455T2	**509484**
Evasion	+		Trinary	07/94 ▸ 05/02	6455T2	**509484**
Saxo	+		Trinary	03/96 ▸	6455T2	**509484**
Synergie	+		Trinary	10/95 ▸ 05/02	6455T2	**509484**
Xantia	+		Trinary	03/93 ▸ 05/02	6455T2	**509484**
XM (89>93)	+		Trinary	05/89 ▸ 12/93	6455L1	**509483**
XM (94>2001)	+		Trinary	01/94 ▸ 07/01	6455T2	**509484**
Xsara	+		Trinary	07/97 ▸ 08/00	6455T2	**509484**
Xsara Picasso	+		Trinary	12/99 ▸	6455X5	**509865**
ZX	+		Trinary	03/91 ▸ 07/98	96143907	**509483**
ZX	+		Trinary	03/91 ▸ 07/98	6455T2	**509484**
CITROËN						
Berlingo	+		Trinary	07/96 ▸ 12/02	6455T2	**509484**

• **New** Nouveau **Neu** Nuevo **Novo** Nuovo **Nieuw** Nowi **Новый** Novy **Nou** Yeni **Νέους**

	A/C				OE	Valeo
CITROËN (.../...)						
Dispatch	+		Trinary	09/95 ▸	6455T2	**509484**
Jumpy	+		Trinary	09/95 ▸	6455T2	**509484**
FIAT						
Albea	+		Trinary/ Green	04/02 ▸	7788280	**508653**
Barchetta	+		Trinary/ Black	05/95 ▸	46410020	**508658**
Brava ▸ 4624580	+		Trinary	06/95 ▸ 09/98	7788280	**508653**
Brava	+		4 levels	03/98 ▸	60625482	**509476**
Bravo	+		Trinary	06/95 ▸ 09/98	7788280	**508653**
Bravo	+		4 levels	03/98 ▸	46476438	**509476**
Cinquecento	+		Trinary	10/94 ▸ 02/98	7741521	**508654**
Coupe	+		Trinary/ Black	11/93 ▸	46410020	**508658**
Croma	+		Trinary	10/85 ▸ 12/96	82475806	**508655**
Idea	+		Pressure sensor	10/03 ▸	46790717	**509485**
Marea ▸ 2018321 ▸	+		4 levels	07/96 ▸	60625482	**509476**
Marea	+		Trinary/ Green	07/96 ▸	7788280	**508653**
Marea	+		Trinary/ Black	07/96 ▸ 10/98	46410020	**508658**
Marengo (185)	+		4 levels/ Black	01/95 ▸	60625482	**509476**
Multipla (98>2004)	+		Trinary/ Green	11/98 ▸ 06/04	7788280	**508653**
Multipla (98>2004)	+		4 levels/ Green	11/98 ▸ 06/04	46476438	**509476**
Multipla (2004>)	+		Trinary/ Green	07/04 ▸	7788280	**508653**
Palio	+		Trinary/ Green	07/96 ▸ 02/01	7788280	**508653**
Palio	+		4 levels/ Green	07/96 ▸ 02/01	46476438	**509476**
Panda	+		Pressure sensor	09/03 ▸	46790717	**509485**
Punto (93>99)	+		Trinary/ Green	07/93 ▸ 09/99	7788280	**508653**
Punto (93>99)	+		4 levels/ Green	04/97 ▸ 09/99	46476438	**509476**
Punto II (99>2003)	+		4 levels	07/99 ▸ 06/03	60625482	**509476**
Punto II (2003>)	+		Pressure sensor	07/03 ▸	46790717	**509485**
Siena (97>2001)	+		Trinary/ Green	11/97 ▸ 12/01	7788280	**508653**
Siena (97>2001)	+		4 levels/ Green	01/97 ▸	46476438	**509476**
Stilo	+		Pressure sensor	09/01 ▸ 12/03	46790717	**509485**
Tempra	+		Low pressure switch	11/89 ▸ 02/93	5963616	**509673**
Tempra	+		Trinary	03/93 ▸ 1996	7741521	**508654**
Tipo	+		Low pressure switch	04/89 ▸ 02/93	5963616	**509673**
Tipo	+		Trinary	03/93 ▸ 10/95	7741521	**508654**
Ulysse (94>2002)	+		Trinary	06/94 ▸ 08/02	9620143680	**509484**
FIAT						
Doblo (2000>2005)	+		4 levels/ Green	10/00 ▸ 12/05	46476438	**509476**

• **New** Nouveau **Neu** Nuevo **Novo** Nuovo **Nieuw** Nowi **Новый** Novy **Nou** Yeni **Νέους**

	A/C				OE	Valeo
FIAT (.../...)						
Doblo Cargo (2004>2006)	+		4 levels/ Green	01/04 ▸ 12/05	46476438	**509476**
Doblo II (2006>)	+		4 levels/ Green	01/06 ▸	46476438	**509476**
Ducato	+		Trinary	02/94 ▸ 06/99	7741521	**508654**
Ducato	+		4 levels/ Green	02/94 ▸	46476438	**509476**
Scudo	+		Trinary	07/95 ▸	9620143680	**509484**
Strada Pick Up	+		Trinary/ Green	03/99 ▸ 03/03	7788280	**508653**
Strada Pick Up	+		4 levels/ Green	03/99 ▸ 03/03	46476438	**509476**
FORD						
Escort	+		Trinary	09/90 ▸ 12/94	6424451	**509664**
Escort	+		Trinary	07/93 ▸ 09/01	1037612	**509665**
Fiesta	+		Trinary	02/89 ▸ 08/93	6424451	**509664**
Fiesta	+		Trinary	08/93 ▸ 09/99	1037612	**509665**
Fiesta	+		Low pressure switch	08/95 ▸ 09/99	1016565	**509482**
Focus	+		Low pressure switch	10/98 ▸ 10/01	1016565	**509482**
Galaxy	+		Trinary	05/95 ▸	7238088	**509477**
Granada	+		Trinary	05/85 ▸ 08/93	6424451	**509664**
Granada	+		Trinary	08/93 ▸ 01/95	1037612	**509665**
Mondeo	+		Low pressure switch	10/93 ▸ 01/96	7085739	**509667**
Mondeo	+		Low pressure switch	01/96 ▸	1016565	**509482**
Orion	+		Trinary	09/90 ▸ 09/93	6424451	**509664**
Scorpio	+		Trinary	03/85 ▸ 08/93	6424451	**509664**
Scorpio	+		Trinary	08/93 ▸	1037612	**509665**
Sierra	+		Trinary	01/87 ▸ 04/93	6424451	**509664**
FORD						
Courrier	+		Trinary	08/91 ▸ 09/96	6424451	**509664**
Courrier	+		Trinary	08/93 ▸ 09/96	1037612	**509665**
LANCIA						
Dedra (89>94)	+		Trinary	03/89 ▸ 06/94	82475806	**508655**
Dedra (89>94) ▸ 4002863	+		Low pressure switch	12/90 ▸	5963616	**509673**
Dedra (94>99)	+		Trinary/ Black	07/94 ▸ 09/99	46410020	**508658**
Delta (93>99)	+		Trinary	03/93 ▸ 08/99	82475806	**508655**
Kappa	+		Trinary/ Black	10/94 ▸	46410020	**508658**
Kappa	+		4 levels/ Black	05/98 ▸ 10/01	60625482	**509476**
Lybra	+		4 levels/ Black	09/99 ▸	60625482	**509476**
Thema	+		Trinary	10/84 ▸ 11/94	82475806	**508655**

• **New** Nouveau **Neu** Nuevo **Novo** Nuovo **Nieuw** Nowi **Новый** Novy **Nou** Yeni **Νέους**

	A/C				OE	Valeo
LANCIA (.../...)						
Thesis	+		Pressure sensor	09/02 ▸	46790717	**509485**
Y (95>2000)	+		Trinary/ Green	11/95 ▸ 08/00	7788280	**508653**
Y (95>2000)	+		Trinary/ Black	11/95 ▸ 08/00	46410020	**508658**
Y (2000>2003)	+		4 levels/ Green	09/00 ▸ 09/03	46476438	**509476**
Y (2003>)	+		Pressure sensor	10/03 ▸	46790717	**509485**
Zeta	+		Trinary	10/94 ▸ 08/02	9620143680	**509484**
MERCEDES						
A Class (168)	+		Pressure sensor	05/97 ▸ 06/04	1408300072	**509486**
C Class (202)	+		Pressure sensor	03/93 ▸ 02/01	1408300072	**509486**
C Class (203)	+			04/00 ▸	2038300472	**509867**
CLK (209)	+			03/02 ▸	2038300472	**509867**
CLS (219)	+			07/04 ▸	2038300472	**509867**
E Class (124)	+		Binary	07/93 ▸ 02/96	1248213651	**508819**
E Class (210)	+		Pressure sensor	04/95 ▸ 06/99	2108300072	**509486**
E Class (211)	+			03/02 ▸	2038300472	**509867**
G Class (463)	+			07/97 ▸	2038300472	**509867**
M Class (163)	+			05/97 ▸	2038300472	**509867**
S Class (140)	+		Pressure sensor	03/91 ▸ 06/93	1408300072	**509486**
S Class (140)	+		Pressure sensor	07/93 ▸ 08/98	2108300072	**509486**
S Class (220)	+		Pressure sensor	09/98 ▸	2108300072	**509486**
SL (R230)	+			08/01 ▸	2038300472	**509867**
SLK (R170)	+		Pressure sensor	08/96 ▸ 03/00	1408300072	**509486**
SLR	+			04/04 ▸	2038300472	**509867**
V Class (638/2) V60365 ▸	+		Pressure sensor	10/96 ▸ 12/02	1408300072	**509486**
MERCEDES						
Viano	+		Pressure sensor	01/03 ▸	1408300072	**509486**
Vito	+		Pressure sensor	01/96 ▸	1408300072	**509486**
MG						
MG F			Trinary	03/95 ▸ 03/02	JTB100220	**508659**
MG ZS			Trinary	07/01 ▸	JTB100220	**508659**
MINI						
MINI (R56) (2006>)				11/06 ▸	64539181464	**509864**
OPEL						
Agila	+		Pressure sensor	03/00 ▸	6850512	**509485**

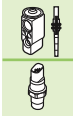

• **New** Nouveau **Neu** Nuevo **Novo** Nuovo **Nieuw** Nowi **Новый** Novy **Nou** Yeni **Νέους**

	A/C				OE	Valeo
OPEL (.../...)						
Astra F	+		Trinary	03/91 ▸ 01/98	1854773	**509668**
Astra G	+		Pressure sensor	02/98 ▸ 02/04	6850512	**509485**
Astra H	+		Pressure sensor	03/04 ▸	6850512	**509485**
Calibra R1000001 ▸	+		Trinary	07/93 ▸ 07/97	1854773	**509668**
Corsa B	+		Trinary	03/93 ▸ 08/03	1854773	**509668**
Corsa C	+		Pressure sensor	09/03 ▸	6850512	**509485**
Frontera	+		Trinary	03/91 ▸ 09/98	1848301	**508660**
Meriva	+		Pressure sensor	05/03 ▸	6850512	**509485**
Signum	+		Pressure sensor	06/03 ▸	6850512	**509485**
Sintra	+		Trinary	03/96 ▸ 12/99	1854773	**509668**
Vectra A	+		Trinary	08/93 ▸ 09/95	1854773	**509668**
Vectra B	+		Pressure sensor	10/95 ▸ 06/03	6850512	**509485**
Vectra C	+		Pressure sensor	04/02 ▸	6850512	**509485**
Zafira	+		Pressure sensor	01/99 ▸	6850512	**509485**
PEUGEOT						
106	+		Trinary	09/91 ▸ 03/96	6455L1	**509483**
106	+		Trinary	09/91 ▸ 07/03	6455T2	**509484**
205 25259192 ▸	+		Trinary	02/83 ▸ 09/98	6455T2	**509484**
205	+		Trinary	07/84 ▸	6455L1	**509483**
206	+		Trinary	09/98 ▸	6455T2	**509484**
305	+		Trinary	07/85 ▸ 06/90	6455L1	**509483**
306	+		Trinary	02/93 ▸ 09/02	6455T2	**509484**
309	+		Trinary	08/85 ▸ 08/94	6455L1	**509483**
309	+		Trinary	08/85 ▸ 08/94	6455T2	**509484**
405	+		Trinary	06/87 ▸ 10/96	6455L1	**509483**
405 S71185506 ▸	+		Trinary	07/92 ▸ 10/96	6455T2	**509484**
406	+		Trinary	05/99 ▸ 04/03	6455X5	**509865**
406 ▸ 9001	+		Trinary	10/95 ▸ 04/03	6455T2	**509484**
505 1792023 ▸	+		Trinary	07/81 ▸ 1990	6455L1	**509483**
605	+		Trinary	10/89 ▸ 06/94	6455L1	**509483**
806	+		Trinary	07/94 ▸ 05/02	6455T2	**509484**
PEUGEOT						
Expert	+		Trinary	09/95 ▸	6455T2	**509484**
Partner	+		Trinary	06/96 ▸ 11/02	6455T2	**509484**

• **New** Nouveau **Neu** Nuevo **Novo** Nuovo **Nieuw** Nowi **Новый** Novy **Nou** Yeni **Νέους**

	A/C				OE	Valeo
PEUGEOT (.../...)						
Ranch	+		Trinary	06/96 ▸ 11/02	6455T2	**509484**
RENAULT						
R19	+		Trinary	07/88 ▸ 11/95	7700832447	**508663**
Clio	+		Trinary	03/96 ▸ 02/98	7700837219	**508665**
Espace II 940711 ▸	+		Trinary	03/94 ▸ 08/96	6025107661	**508657**
Espace III	+		Trinary	10/97 ▸ 10/02	7700837219	**508665**
Laguna 960315 ▸	+		Trinary	03/96 ▸ 12/00	7700837219	**508665**
Mégane	+		Trinary	11/95 ▸ 02/99	7700837219	**508665**
Mégane Scénic	+		Trinary	10/96 ▸ 09/99	7700837219	**508665**
Twingo	+		Trinary	08/94 ▸ 08/04	7700837219	**508665**
RENAULT						
Express	+		Trinary	09/85 ▸ 08/97	7700832447	**508663**
Extra	+		Trinary	09/85 ▸ 08/97	7700832447	**508663**
Master	+		Trinary	09/97 ▸ 09/03	7700837219	**508665**
Rapid	+		Trinary	09/85 ▸ 08/91	7700832447	**508663**
ROVER						
200	+		Trinary	11/95 ▸ 11/99	JTB100220	**508659**
200 coupe, cabriolet	+		Trinary	03/96 ▸	JTB100220	**508659**
25	+		Trinary	08/04 ▸	JTB100220	**508659**
400	+		Trinary	05/95 ▸ 03/00	JTB100220	**508659**
45	+		Trinary	01/00 ▸ 05/04	JTB100220	**508659**
MG F	+		Trinary	03/95 ▸ 03/02	JTB100220	**508659**
RV8	+		Trinary	01/93 ▸ 01/96	JTB100220	**508659**
SAAB						
900	+		Trinary	07/93 ▸ 02/98	4383170	**508825**
9000	+		Trinary	06/84 ▸ 07/94	4319984	**508829**
9000	+		Trinary	06/84 ▸ 06/91	9627159	**508655**
9000	+		Trinary	07/93 ▸ 07/98	4383170	**508825**
SEAT						
Alhambra	+		Trinary	03/96 ▸	1H0959139B	**509477**
Alhambra	+		Trinary	03/96 ▸	6K0959139	**508830**
Arosa	-		Trinary	02/97 ▸ 04/98	1H0959139B	**509477**

• **New** Nouveau **Neu** Nuevo **Novo** Nuovo **Nieuw** Nowi **Новый** Novy **Nou** Yeni **Νέους**

	A/C				OE	Valeo
SEAT (.../...)						
Arosa	+		Pressure sensor	04/98 ▸	1J0959126	**509662**
Arosa	+		Pressure sensor	04/98 ▸	1K0959126B	**509662**
Cordoba (93>96) ▸ 6K-W-010 000	+		Trinary	11/93 ▸ 06/96	1H0959139B	**509477**
Cordoba (96>99) 6K-W-010 001 ▸	+		Trinary	07/96 ▸ 05/99	6K0959139	**508830**
Cordoba (99>2002)	+		Trinary	05/99 ▸ 08/02	6K0959139	**508830**
Cordoba (99>2002)	+		Pressure sensor	05/99 ▸	1K0959126B	**509662**
Ibiza	+		Trinary	02/93 ▸ 08/98	1H0959139B	**509477**
Ibiza 6K-W-010001 ▸	+		Trinary	09/97 ▸ 11/01	6K0959139	**508830**
Ibiza	+		Pressure sensor	06/99 ▸	1K0959126B	**509662**
Leon	+		Pressure sensor	11/99 ▸	1K0959126B	**509662**
Mii (2011>)	+		Pressure sensor	10/11 ▸	1K0959126D	**509662**
Toledo ▸ 1L-ZD308 450	+		Trinary	02/91 ▸ 11/93	357959139B	**509672**
Toledo	+		Trinary	11/93 ▸ 10/98	1H0959139B	**509477**
Toledo 1L-W023 117 ▸	+		Trinary	12/97 ▸ 10/98	6K0959139	**508830**
Toledo	+		Pressure sensor	10/98 ▸ 07/04	1K0959126B	**509662**
SEAT						
Inca	+		Trinary	11/95 ▸ 06/03	6K0959139	**508830**
SKODA						
Citigo (2011>)	+		Pressure sensor	10/11 ▸	1K0959126D	**509662**
Fabia ▸ 6Y-5-317 711	+		Pressure sensor	08/99 ▸ 12/07	1K0959126D	**509662**
Octavia ▸ 1U-X-232 429	+		Trinary	10/96 ▸ 07/00	1H0959139B	**509477**
Octavia 1u-y-275 062 ▸	+		Pressure sensor	10/96 ▸ 01/05	1K0959126B	**509662**
Roomster (2006>2010)			Pressure sensor	03/06 ▸ 03/10	1K0959126D	**509662**
Superb II (2008>)			Pressure sensor	03/08 ▸	1K0959126D	**509662**
VAUXHALL						
Agila	+		Pressure sensor	06/00 ▸	9131721	**509485**
Astra III	+		Trinary	10/91 ▸ 07/94	90359991	**509668**
Astra IV	+		Pressure sensor	04/98 ▸ 02/04	9131721	**509485**
Astra (2004>)	+		Pressure sensor	03/04 ▸	9131721	**509485**
Calibra	+		Trinary	08/94 ▸ 07/97	90359991	**509668**

• **New** Nouveau **Neu** Nuevo **Novo** Nuovo **Nieuw** Nowi **Новый** Novy **Nou** Yeni **Νέους**

	A/C				OE	Valeo
VAUXHALL (.../...)						
Cavalier III R1000001 ▸	+		Trinary	08/94 ▸ 10/95	90359991	**509668**
Corsa I	+		Trinary	04/97 ▸ 08/00	90359991	**509668**
Corsa II	+		Pressure sensor	09/00 ▸ 08/03	9131721	**509485**
Frontera	+		Trinary	10/91 ▸ 09/98	91157056	**508660**
Meriva	+		Pressure sensor	05/03 ▸	9131721	**509485**
Omega			Trinary	04/94 ▸ 12/03	90359991	**509668**
Signum	+		Pressure sensor	06/03 ▸	9131721	**509485**
Sintra	+		Trinary	03/96 ▸ 12/99	90359991	**509668**
Sintra	+		Pressure sensor	09/97 ▸ 12/99	9131721	**509485**
Vectra	+		Trinary	10/95 ▸ 03/02	90506752	**509669**
Vectra	+		Pressure sensor	09/00 ▸	9131721	**509485**
Zafira	+		Pressure sensor	05/99 ▸	9131721	**509485**
VOLKSWAGEN						
Bora	+		Pressure sensor	09/98 ▸	1J0959126	**509662**
Bora	+		Trinary	09/98 ▸ 05/05	1H0959139B	**509477**
Corrado	+		Trinary	09/88 ▸ 07/91	357959139B	**509672**
Corrado	+		Trinary	08/92 ▸ 07/95	1H0959139B	**509477**
Eos	+		Pressure sensor	05/06 ▸	1K0959126B	**509662**
Fox	+		Pressure sensor	11/04 ▸	1K0959126B	**509662**
Golf I Cabriolet	+		Trinary	04/84 ▸ 07/92	357959139B	**509672**
Golf II	+		Trinary	08/83 ▸ 10/91	357959139B	**509672**
Golf II Cabriolet	+		Trinary	01/98 ▸ 02/98	357959139B	**509672**
Golf II Cabriolet	+		Trinary	09/93 ▸ 12/97	1H0959139B	**509477**
Golf III	+		Trinary	11/91 ▸ 04/99	1H0959139B	**509477**
Golf III Cabriolet	+		Trinary	03/98 ▸ 06/00	1H0959139B	**509477**
Golf IV	+		Pressure sensor	10/97 ▸ 09/03	1K0959126B	**509662**
Golf IV	+		Trinary	10/97 ▸ 09/03	1H0959139B	**509477**
Golf V	+		Pressure sensor	10/03 ▸	1K0959126B	**509662**
Golf VI (2008>)	+		Pressure sensor	10/08 ▸	1K0959126D	**509662**
Golf VI Plus (2009>)	+		Pressure sensor	01/09 ▸	1K0959126D	**509662**
Golf Plus	+		Pressure sensor	01/05 ▸	1K0959126B	**509662**
Jetta (78>92)	+		Trinary	08/83 ▸ 11/92	357959139B	**509672**
Jetta (2000>)	+		Pressure sensor	02/01 ▸	1K0959126D	**509662**
Lupo	+		Pressure sensor	10/98 ▸	1K0959126B	**509662**
New Beetle (98>2001)	+		Trinary	11/98 ▸ 05/01	1H0959139B	**509477**
New Beetle (2001>)	+		Pressure sensor	06/01 ▸	1K0959126B	**509662**
Passat (88>93)	+		Trinary	04/88 ▸ 09/93	357959139B	**509672**

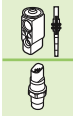

• **New** Nouveau **Neu** Nuevo **Novo** Nuovo **Nieuw** Nowi **Новый** Novy **Nou** Yeni **Νέους**

	A/C				OE	Valeo
VOLKSWAGEN (.../...)						
Passat (93>97)	+		Trinary	10/93 ▸ 05/97	1H0959139B	**509477**
Passat (96>2000)	+		Trinary	06/97 ▸ 08/00	8D0959482B	**509661**
Passat (2005>)	+		Pressure sensor	03/05 ▸	1K0959126B	**509662**
Passat CC	+		Pressure sensor	05/08 ▸ 11/10	1K0959126D	**509662**
Polo	+		Trinary	10/94 ▸ 09/01	1H0959139B	**509477**
Polo	+		Trinary	10/99 ▸ 09/01	6K0959139	**508830**
Polo	+		Pressure sensor	10/99 ▸	1K0959126B	**509662**
Scirocco (2008>)			Pressure sensor	08/08 ▸	1K0959126D	**509662**
Sharan (95>2003)	+		Trinary	08/95 ▸ 05/03	1H0959139B	**509477**
Sharan (2003>)	+		Trinary	06/03 ▸	1H0959139B	**509477**
Sharan (2003>)	+		Pressure sensor	06/03 ▸	1K0959126B	**509662**
Tiguan	+		Pressure sensor	11/07 ▸	1K0959126D	**509662**
Touareg	+		Pressure sensor	11/02 ▸	1K0959126D	**509662**
Touran	+		Pressure sensor	02/03 ▸	1K0959126B	**509662**
Vento	+		Trinary	07/94 ▸ 12/97	1H0959139B	**509477**
VOLKSWAGEN						
Caddy (95>2004) ▸ F9K-W-514000	+		Trinary	11/95 ▸ 09/97	1H0959139B	**509477**
Caddy (95>2004) F9K-W-514001 ▸	+		Trinary	09/97 ▸ 06/03	6K0959139	**508830**
Caddy (2004>)	+		Pressure sensor	02/04 ▸	1K0959126B	**509662**
LT	+		Trinary	05/96 ▸	1H0959139B	**509477**
Transporter (F70) (90>2003)	+		Trinary	09/90 ▸ 06/03	1H0959139B	**509477**
Transporter (7J/7H) (2003>)	+		Pressure sensor	04/03 ▸	1K0959126B	**509662**
VOLVO						
740-760-780	+		Low pressure switch	02/82 ▸ 08/94	12595195	**509673**
850	+		Trinary	06/91 ▸ 12/93	35450956	**508831**
850	+		Trinary	06/91 ▸ 12/96	9132754	**509674**
940-960	+		Low pressure switch/ Grey	08/93 ▸ 12/96	68485325	**509479**
940-960	+		Low pressure switch	09/90 ▸ 08/93	12595195	**509673**
940-960	+		Low pressure switch/ Black	09/93 ▸ 08/96	13432166	**509478**

• **New** Nouveau **Neu** Nuevo **Novo** Nuovo **Nieuw** Nowi **Новый** Novy **Nou** Yeni **Νέους**

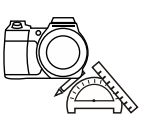

Valeo 508653

FIAT	7788280
LANCIA	7788280

Valeo 508654

FIAT	7741521

Valeo 508655

ALFA ROMEO	60810323
FIAT	82475806
LANCIA	82475806
SAAB	9627159

Valeo 508657

RENAULT	6025107661

Valeo 508658

FIAT	46410020
LANCIA	46410020

Valeo 508659

MG	JTB100220
ROVER	JTB100220

Valeo 508660

OPEL	1848301
VAUXHALL	91157056

Valeo 508663

RENAULT	7700832447

Valeo 508665

RENAULT	7700837219

Valeo 508814

BMW	64538362055

Valeo 508815

BMW	64531390070

Valeo 508817

BMW	64538390971

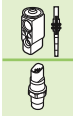

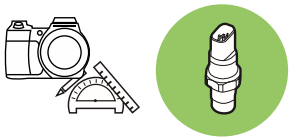

Valeo 508818

BMW	64538391639

Valeo 508819

MERCEDES	1248213651

Valeo 508825

SAAB	4383170

Valeo 508829

SAAB	4319984

Valeo 508830

SEAT	6K0959139
VOLKSWAGEN	6K0959139

Valeo 508831

VOLVO	35450956

Valeo 509474

ALFA ROMEO	60811865

Valeo 509476

ALFA ROMEO	60625482
FIAT	60625482
FIAT	46476438
LANCIA	60625482
LANCIA	46476438

Valeo 509477

AUDI	1H0959139B
FORD	7238088
SEAT	1H0959139B
SKODA	1H0959139B
VOLKSWAGEN	1H0959139B

Valeo 509478

VOLVO	13432166

Valeo 509479

VOLVO	68485325

Valeo 509482

FORD	1016565

Valeo 509483

CITROËN	6455L1
CITROËN	96143907
PEUGEOT	6455L1

Valeo 509484

CITROËN	6455T2
FIAT	9620143680
PEUGEOT	6455T2

Valeo 509485

OPEL	6850512
VAUXHALL	9131721

Valeo 509486

MERCEDES	1408300072

Valeo 509661

AUDI	8D0959482B
VOLKSWAGEN	8D0959482B

Valeo 509662

AUDI	8Z0959126
AUDI	1J0959126
SEAT	1J0959126
SKODA	1J0959126
VOLKSWAGEN	1J0959126

Valeo 509664

FORD	6424451

Valeo 509665

FORD	6807481
FORD	1037612

Valeo 509667

FORD	7085739

Valeo 509668

OPEL	1854773
VAUXHALL	90359991

Valeo 509669

VAUXHALL	90506752

Valeo 509672

SEAT	357959139B
VOLKSWAGEN	357959139B

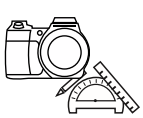

Valeo 509673

FIAT	5963616
LANCIA	5963616
VOLVO	12595195

Valeo 509867

MERCEDES	2038300472

Valeo 509674

VOLVO	9132754

Valeo 509864

BMW	64536909257

Valeo 509865

CITROËN	6455X5
PEUGEOT	6455X5

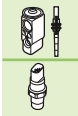

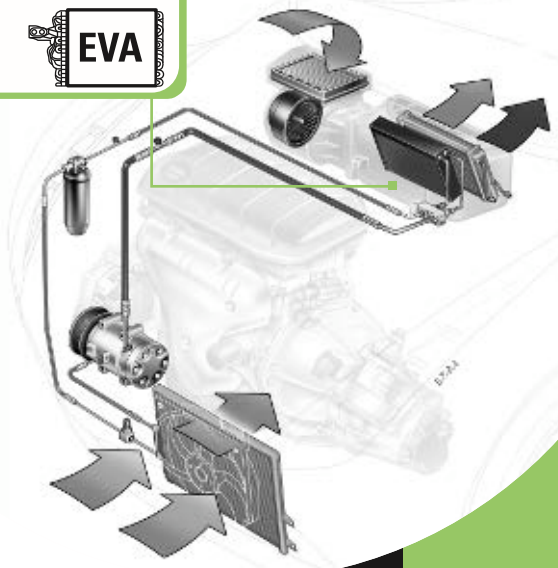

EVAPORATOR
EVAPORATEUR
VERDAMPFER
EVAPORADOR
EVAPORADOR
EVAPORATORE
VERDAMPER
PAROWNIK
ИСПАРИТЕЛЬ
VÝPARNÍK
EVAPORATOR
EVAPORATÖR
Εξατμιστής

EN

Function
The evaporator is the thermal exchanger generating cold air. It cools and dries the air flowing through its fins (defogging).

Replacement
The evaporator must be replaced in case of a breakdown or an odor problem.
Typical problems with evaporators :
- Perforation due to the presence of corrosion on the surface of the evaporator
- Clogging of the fins due to the presence of ice
- Leaks at the inlet and outlet fittings
- Low performance due to incorrectly changing the specific evaporator with an adaptable
- Unpleasant odors in the cabin due to the presence of bacteria on the surface of the evaporator. Caution when using inappropriate cleaning products

Repair recommendations
- Choose OE quality parts. Check the fins and quality of the inlet/outlet fittings.
- Clean the air flow loop with an adapted anti-bacterial treatment
- The filter drier / accumulator and expansion valve / orifice tube must be replaced
- Use new seals and o'rings when replacing components

FR

Fonction
L'évaporateur est l'échangeur thermique qui génère l'air froid. Il refroidit et assèche -pour le désembuage- l'air qui passe à travers ses ailettes.

Remplacement
L'évaporateur doit être remplacé s'il est obstrué, percé ou contaminé de moisissures persistantes.
Les problèmes les plus typiques des évaporateurs:
- Perforation dûe à la corrosion
- Ailettes bouchées à cause de saletés ou de givre
- Fuites sur les raccords
- Mauvaise performance dûe au montage d'un adaptable.
- Mauvaises odeurs dûes à la présence de moisissures/bactéries. Attention à ne pas utiliser de produits de nettoyage nocifs ou détériorant le traitement de surface des échangeurs.

Recommandations Valeo pour la Réparation
- Choisir la qualité d'origine. Vérifier l'état des ailettes, des raccords et du traitement de surface.
- Nettoyer le circuit d'air avec un produit anti-bactérien adapté
- En cas de remplacement de l'évaporateur, remplacer aussi le filtre déshydratant et le détendeur/orifice calibré.
- Installer de nouveaux joints.

DE

Funktion
Der Verdampfer ist ein Wärmetauscher, der Kaltluft erzeugt. Wenn die Luft durch sein Lamellensystem strömt, wird sie abgekühlt und getrocknet (Verhinderung beschlagener Scheiben).

Austausch
Der Verdampfer muss im Fall einer Panne und bei der Entstehung von unangenehmen Gerüchen ausgewechselt werden.
Häufige Probleme mit dem Verdampfer:
- Undichte Stellen infolge von Korrosion an der Verdampferoberfläche
- Verstopfung der Lamellen aufgrund von Eisablagerungen
- Lecks an den Ein- und Auslassarmaturen
- Unzureichende Leistung, nachdem der Verdampfer durch ein ungeeignetes Teil ersetzt wurde
- Unangenehme Gerüche im Innenraum aufgrund von Bakterien an der Verdampferoberfläche. Vermeiden Sie die Verwendung ungeeigneter Reinigungsprodukte

Reparaturempfehlungen
- Wählen Sie ein Produkt mit Originalteilequalität und prüfen Sie die Lamellen, die Qualität der Einlass-/Auslassarmaturen sowie das Vorhandensein einer Oberflächenbehandlung.
- Reinigen Sie den Klimakreisllauf mit einem geeigneten antibakteriellen Mittel
- Wechseln Sie gleichzeitig den Filtertrockner/-akkumulator und das Drosselventil bzw. die Festdrossel aus
- Verwenden Sie beim Auswechseln von Bauteilen grundsätzlich neue Dichtungen und O-Ringe

SP

Función
El evaporador es el intercambiador térmico que genera aire frío. Refrigera y seca el aire que fluye a través de sus aletas (desempañado).

Sustitución
El evaporador debe reemplazarse en caso de avería o de olores desagradables.
Problemas típicos con los evaporadores:
- Perforación debida a la presencia de corrosión en la superficie del evaporador.
- Atasco de las aletas debido a la presencia de hielo.
- Fugas en los dispositivos de entrada y salida.
- Ineficacia debida al cambio incorrecto del evaporador específico por uno adaptable.
- Olores desagradables en el habitáculo debido a presencia de bacterias en la superficie del evaporador. No utilizar productos de limpieza inadecuados.

Recomendaciones para la reparación
- Elegir piezas de calidad originales y verificar las aletas, la calidad de los dispositivos de entrada y salida y la presencia de un tratamiento de superficie.
- Limpiar el circuito de flujo del aire con un producto bactericida adaptado
- Debe reemplazarse el filtro deshidratante / acumulador y la válvula de expansión / orificio calibrado.
- Utilizar juntas nuevas al sustituir los componentes.

IT

Funzione
L'evaporatore è lo scambiatore termico che genera aria fredda. Raffredda l'aria che attraversa le sue alette eliminandone l'umidità (raffreddamento/disappannamento).

Sostituzione
L'evaporatore deve essere sostituito in caso di rottura .
Problemi più frequenti relativi all'evaporatore:
- Perforazione dovuta alla presenza di acido nell'evaporatore
- Otturamento delle alette dovute alla presenza di sporcizia
- Perdite sui tubi d'ingresso e di uscita
- Basso rendimento dovuto alla sostituzione dell'evaporatore specifico con uno adattabile
- Odori sgradevoli nell'abitacolo persistenti dovuti alla presenza di batteri e funghi sulla superficie dell'evaporatore non eliminabili con i sistemi tradizionali. Attenzione a non utilizzare prodotti di pulizia inadeguati

Raccomandazioni Valeo per la riparazione
- Scegliere un pezzo di ricambio di qualità OE e verificare le alette, la qualità dei raccordi di ingresso/uscita, la presenza di trattamento di superficie.
- Pulire il circuito dell'aria con un prodotto antibatterico adeguato
- Occorre sostituire il filtro disidratatore / accumulatore e la valvola di espansione / tubo di espansione
- Utilizzare nuove guarnizioni e nuovi o'ring ad ogni sostituzione dei componenti

NL

Functie
De verdamper is de warmtewisselaar die koude lucht produceert. Hij koelt en droogt de lucht die door de spiralen worden geblazen (ontwaseming).

Vervanging
De verdamper moet worden vervangen in geval van defect of geurproblemen.
Problemen die het meest voorkomen bij verdampers:
- Perforatie veroorzaakt door corrosie aan het oppervlak van de verdamper
- Verstopping van de spiralen door ijs
- Lekken aan de inlaat- en uitlaatkoppelstukken
- Slechte werking doordat de verdamper is vervangen door een niet goed toepasbaar product
- Onaangename geuren in het interieur, veroorzaakt door bacteriën op het oppervlak van de verdamper. Let op! Gebruik geen ongeschikte reinigingsproducten

Aanbevelingen bij de reparatie
- Kies een onderdeel van OE kwaliteit en check de goede staat van de spiralen en van de inlaat-/uitlaatkoppelstukken evenals de aanwezigheid van een oppervlaktebehandeling.
- Reinig het systeem waar de lucht doorheen stroomt met een antibacteriële behandeling
- Vervang de filter droger / accumulator- en expansieventiel / orifice tube
- Gebruik nieuwe afdichtingen en O-ringen wanneer u onderdelen vervangt.

PL

Funkcja
Parownik jest wymiennikiem ciepła generującym zimne powietrze. Chłodzi i osusza powietrze przepływające przez jego finsy (odparowuje).

Wymiana
Parownik musi być wymieniony po uszkodzeniu w wyniku wypadku lub przy pojawieniu się problemu z brzydkim zapachem.
Typowe problemy z parownikami:
- Perforacja ze względu na obecność korozji na powierzchni parownika
- Zatkanie finsów (kanalików) ze względu na obecność lodu
- Wycieki na wlocie i wylocie z parownika
- Niska wydajność ze względu na zastąpienie parownika nieodpowiednim zamiennikiem
- Nieprzyjemny zapach w kabinie ze względu na obecność bakterii na powierzchni parownika.

Zachować ostrożność podczas używania środków czyszczących, mogą negatywnie wpływać na powierzchnię parownika..

Zalecenia naprawy
- Wybierz część jakości OE. Sprawdź jakość finsów i połączeń wlotowych / wylotowych
- Oczyść układ przepływu powietrza odpowiednim środkiem antybakteryjnym
- Wymień filtr osuszacz / zasobnik i zawór rozprężny / dławik
- Zastosuj nowe uszczelki i oringi przy wymianie elementów A/C

EVA

RU

Функция
Испаритель - это теплообменник, который создает холодный воздух. Он охлаждает и осушает поток воздуха с помощью своих ребер (устранение запотевания).

Замена
Испаритель следует заменить в случае поломки или появления неприятного запаха.

Типичные проблемы с испарителями :
- Появление отверстий под действием коррозии на поверхности испарителя
- Засорение ребер под действием льда
- Утечки на входной и выходной арматуре
- Низкая производительность из-за неправильной замены конкретного испарителя на адаптированный
- Неприятные запахи из-за наличия бактерий на поверхности испарителя.
- При использовании неподходящих чистящих средств.

Рекомендации по ремонту
- Покупать оригинальные качественные детали. Проверять ребра и качество входной и выходной арматуры.
- Очистить патрубки системы кондиционирования подходящим антибактериальным средством
- Заменить фильтр-влагоотделитель / сборник и регулирующий клапан / дроссельную трубку
- Использовать новые прокладки и кольцевые уплотнения при замене компонентов

CZ

Funkce
Výparník je výměník tepla vytvářející studený proud vzduchu. Ochlazuje a vysušuje vzduch proudící přes jeho chladicí žebra (eliminace orosení skel).

V měna
Výparník musí být vyměněn v případě poškození nebo při přetrvávajících problémech se zápachem.
Typické problémy s v parníky:
- Proražení v důsledku koroze výparníku
- Ucpání žeber v důsledku vzniku ledu
- Úniky u vstupních a výstupních šroubení
- Nízký výkon v důsledku záměny výparníku za jiný, nesprávný typ
- Nepříjemný zápach v kabině vozidla v důsledku přítomnosti bakterií na povrchu výparníku.

POZOR na použití nevhodných čisticích produktů.

Doporučení pro opravy
- Zvolte díly v kvalitě pro OE. Překontrolujte chladicí žebra a kvalitu šroubení na vstupu/výstupu.
- Očistěte celý okruh přívodu vzduchu pomocí antibakteriálního prostředku.
- Je nutné měnit Vysoušecí filtr/akumulátor a expanzní ventil/škrtící trysku
- Použijte nová těsnění a O-kroužky při výměně komponentů.

HU

Szerepe
A belső elpárologtató az a hőcserélő, amelyik a beáramló levegőt hűti és száritja (páramentesít).

Cseréje
A párologtatót belső meghibásodás vagy kellemetlen szagkibocsátás esetén kell cserélni.
Gyakran el forduló meghibásodások:
- a párologtató kilyukad a felületén lévő korrózió hatására
- a lamellák eltömődnek a jégképződés miatt
- szivárgás a be- és kivezető csövek csatlakozásánál
- csökkentett teljesítmény, ha az eredeti alkatrészt utángyártottra cserélték
- kellemetlen szag az utastérben a párologtató felületén található baktériumok miatt

Használjon megfelelő minőségű fertőtlenítő szereket.

Javítási tanácsok
- Válasszon OE alkatrészt. Ellenőrizze a lamellákat és a csatlakozások minőségét.
- Tisztítsa ki és fertőtlenítse a szellőzőrendszert antibakteriális szerrel.
- A párologtató cseréjével egyidejűleg cserélje ki a szárítószűrőt és az expanziós szelepet is.
- Mindig használjon új gyűrűket és alátéteket, ha a klímarendszer valamelyik alkatrészét kicseréli.

RO

Funcţiune:
Evaporatorul este schimbătorul de căldură generator de aer rece. Răcește și usucă aerul care circulă între palete.

Înlocuire:
Evaporatorul trebuie înlocuit în caz de defect sau problemă de miros.

Probleme tipice cu evaporatorul
- Perforaţie datorită coroziunii de pe suprafaţa evaporatorului.
- Înfundarea paletelor datorită prezenţei gheţii.
- Scurgeri la racordurile de umplere şi evacuare.
- Performanţă scăzută datorită schimbării evaporatorului specific cu unul adaptabil.
- Miros neplăcut în cabină datorită prezenţei bacteriilor pe suprafaţa evaporatorului.
- Atenţie la folosirea produselor de curăţat nepotrivite.

Recomandări de reparaţie:
- Alegeţi piese de schimb de calitatea aparaturii originale. Verificaţi paletele şi calitatea racordurilor de umplere/evacuare.
- Curăţaţi circuitul curentului de aer prin tratament anti-bacterial potrivit.
- Filtrul uscător / acumulatorul şi ventilul de extindere / tubul deschiderii trebuie înlocuite.
- La schimbarea pieselor folosiţi racorduri şi inele de etanşare noi.

TU

İşlev:
Evaporatör soğuk hava oluşturan ısı değiştiricisidir. Yaprakları (fin) arasından geçen havanın nemini alır ve soğutur.

Değişim:
Evaporatör bütünlüğünün bozulduğu ve kötü kokulara sebebiyet verdiği hallerde değiştirilmelidir.
Evaporatörde en çok rastlanan sorunlar
- Evaporatör üzerinde korozyon sebebiyle oluşabilecek delikler
- Finler üzerinde buz oluşumu sebebiyle meydana gelebilecek tıkanıklıklar
- Giriş ve çıkış bağlantılarında olabilecek sızıntılar
- Özel bir evaporatör yerine uydurulmuş olanının sebebiyet vereceği düşük ısı performansı
- Evaporatör üzerinde yerleşmiş bulunan bakterilere bağlı kötü kokular. Sistem temizliği kalitesiz ürünlerle yapılmamalıdır.

Onarım önerileri:
- Değişim için OE kaliteli bir ürün seçiniz. Finlerin ve giriş çıkış bağlantılarının durumunu kontrol ediniz.
- Hava kanallarının temizliğini kaliteli anti bakteriyel ürünlerle yapınız.
- Kurutucu, detantör, orifis tüpü değişim gerektiren ürünlerdendir.
- Değişim sırasında yeni yalıtkan ve o-ring contalar kullanılmalıdır.

GR

Λειτουργία :
Ο εξατμιστής είναι ο θερμικός εναλλάκτης που δημιουργεί ψυχρό αέρα. Δροσίζει και ξηραίνει (για το ξεθόλωμα) τον αέρα που εισέρχεται μέσω των πτερυγίων του.

Αντικατάσταση :
Ο εξατμιστής πρέπει να αντικατασταθεί σε περίπτωση βουλώματος, διαρροών η επίμονων σχηματοποιήσεων.

Συνηθισμένα προβλήματα των εξατμιστών :

- Διάτρηση λόγω διάβρωσης.
- Φράξιμο των πτερυγίων λόγω της παρουσίας ακαθαρσιών η πάγου.
- Διαρροές στις συνδέσεις εισόδου και εξόδου.
- Κακή απόδοση οφειλόμενη στην αντικατάσταση του εξατμιστή με ένα χαμηλότερης ποιότητας.
- Δυσάρεστες οσμές στην καμπίνα λόγω της παρουσίας βακτηρίων στην επιφάνεια του εξατμιστή. Δώστε ιδιαίτερη προσοχή όταν χρησιμοποιείται ακατάλληλα προϊόντα καθαρισμού (επιβλαβές στην επιφάνεια των εναλλακτών).

Συστάσεις απο την Valeo για την επισκευή :

- Επιλέξτε γνήσια ανταλλακτικά. Ελέγξτε τα πτερύγια, την ποιότητα των συνδέσεων εισόδου/εξόδου και την κατάσταση της επιφάνειας.

- Καθαρίστε το κύκλωμα ροής του αέρα με κατάλληλο αντιβακτηριακό προϊόν

- Με την αλλαγή του εξατμιστή πρέπει να αντικαταστήστε το ξηραντήρα (φίλτρο υγρού)/συσσωρευτή και τη βαλβίδα εκτόνωσης/βαλβίδα αντεπιστροφής.

- Οταν αντικαθιστάτε οποιοδήποτε εξάρτημα του κυκλώματος, κατόπιν να χρησιμοποιείτε καινούργια στεγανοποιητικά λαστιχάκια και τσιμούχες.

	A/C			GAZ		OE	Valeo	EVA / BF	x
ALFA ROMEO									
Giulietta (2010>)	A+				06/10 ▸	77365580	**515132**	EVA	
AUDI									
A3 (2003>)	+		+	R134a	05/03 ▸	1K1820103A	**817719**	EVA	245 240
A3 (2003>)	A+		+	R134a	05/03 ▸	1K2820103B	**817720**	EVA	245 240
A4 (94>2000)	+			R134a	08/97 ▸ 09/01	8D1820103D	**817521**	EVA	261 200
S3 (2006>)	+			R134a	10/06 ▸	1K2820103B	**817720**	EVA	245 240
S4 (97>2001)	+			R134a	10/97 ▸ 09/01	8D1820103D	**817521**	EVA	261 200
TT (2006>)	+		+	R134a	08/06 ▸	1K1820103A	**817719**	EVA	245 240
TT (2006>)	+			R134a	08/06 ▸	1K2820103B	**817720**	EVA	245 240
BMW									
1 series E87, E87 LCI	A+			R134a	09/04 ▸	64116934781	**818201**	EVA	
3 series E36	+			R134a	12/90 ▸ 02/00	64118391356	**817510**	EVA	285 191
3 series E46	+			R134a	03/98 ▸	64118372772	**817511**	EVA	259 178
3 series E90/E91/E92	A+			R134a	03/05 ▸	64116934781	**818201**	EVA	
5 series E34	+			R12	11/87 ▸ 09/95	64118391277	**817512**	EVA	330 205
5 series E39	A+				03/00 ▸ 04/04	64118385560	**515131**	EVA	
7 series E32	+			R12	09/86 ▸ 05/94	64118391277	**817512**	EVA	330 205
7 series E38	A+			R134a	06/94 ▸ 08/01	64118372191	**817513**	EVA	320 204
8 series E31	+			R12	09/89 ▸ 01/00	64118391277	**817512**	EVA	330 205
M5 E39					07/99 ▸ 06/03	64118385560	**515131**	EVA	
X5 (2000>2006)					01/00 ▸ 11/06	64118385560	**515131**	EVA	
X5 (2000>2006)	A+				01/00 ▸ 11/06	64118385560	**515131**	EVA	
CITROËN									
Xsara (97>2000) ▸ 8350				R134a	03/98 ▸ 09/99	6444C4	**817085**	EVA	225 211
Xsara (97>2000) ▸ 8350	A+			R134a	07/97 ▸ 09/99	6444C4	**817085**	EVA	225 211
ZX	+		+	R134a	03/91 ▸ 07/98	6461C0	**817080**	EVA	263 229
CITROËN									
Berlingo (2002>)	+			R134a	12/02 ▸	6450NW	**818981**	EVA	
LAND ROVER									
Range Rover (2002>2009)					03/02 ▸ 06/09	JQB000160	**515131**	EVA	
MERCEDES									
200/300 (124)	+			R134a	12/84 ▸ 06/93	1248300658	**817515**	EVA	298 229

• **New** Nouveau **Neu** Nuevo **Novo** Nuovo **Nieuw** Nowi **Новый** Novy **Nou** Yeni **Νέους**

	A/C			GAZ		OE	Valeo	EVA / BF	x
MERCEDES (.../...)									
C Class (202)	+			R134a	03/93 ▸ 02/01	2028300758	**817514**	EVA	340 241
E Class (124)	+			R134a	07/93 ▸ 03/98	1248300658	**817515**	EVA	298 229
E Class (210)	+			R134a	04/95 ▸ 06/99	2108300958	**817516**	EVA	307 237
S Class (140)	A+			R12	03/91 ▸ 06/93	1408302358	**817517**	EVA	207 140
S Class (140) 133639 ▸	A+			R134a	07/93 ▸ 07/99	1408302358	**817517**	EVA	207 140
MERCEDES									
Sprinter (95>)	+			R134a	02/95 ▸ 11/99	0008306958	**817328**	EVA	286 200
NISSAN									
Micra (K12) (2003>2005)	+			R134a	01/03 ▸	27280AX100	**817680**	EVA	225 209
Micra (K12) (2003>2005)	+		DCI	R134a	01/03 ▸	27280AX360	**817682**	EVA	225 209
Micra (K12) (2003>2005)	+		DCI	R134a	01/03 ▸	27280AX300	**817683**	EVA	225 209
OPEL									
Astra G (98>)	+			R134a	02/98 ▸	1618146	**817518**	EVA	280 210
Corsa C	+			R134a	09/00 ▸	6845612	**817530**	EVA	242 203
Signum	+		+	R134a	06/03 ▸	6845622	**817717**	EVA	280 245
Signum	+		+	R134a	06/03 ▸	6845623	**817718**	EVA	280 245
Tigra TwinTop (2004>)	+			R134a	07/04 ▸	6845612	**817530**	EVA	242 203
Vectra C (2002>)	+		+	R134a	04/02 ▸	6845622	**817717**	EVA	280 245
Vectra C (2002>)	+		+	R134a	04/02 ▸	6845623	**817718**	EVA	280 245
OPEL									
Combo (2001>)	+			R134a	10/01 ▸	6845612	**817530**	EVA	242 203
PEUGEOT									
206	+			R134a	09/98 ▸	6444C6	**817519**	EVA	225 211
306	+			R134a	02/93 ▸ 09/02	6450CH	**817520**	EVA	263 177
405 (92>96)	+			R134a	07/92 ▸ 10/96	6444A3	**817093**	EVA	285 203
406 (95>99)	+		+	R134a	10/95 ▸ 04/99	6450CF	**817095**	EVA	285 203
406 (95>99)	+			R134a	10/95 ▸ 04/03	6450CG	**817338**	EVA	285 203
406 (99>)	+			R134a	04/99 ▸ 04/03	6450CG	**817338**	EVA	285 203
406 (99>)	+			R134a	04/99 ▸ 04/04	6450JT	**817339**	EVA	286 200
607 (2000>2004)	+		+	R134a	05/00 ▸ 09/04	6450JS	**817467**	EVA	330 203
607 (2000>2004)	A+		+	R134a	05/00 ▸ 09/04	6450HA	**817467**	EVA	330 203

• **New** Nouveau **Neu** Nuevo **Novo** Nuovo **Nieuw** Nowi **Новый** Novy **Nou** Yeni **Νέους**

	A/C			GAZ		OE	Valeo	EVA / BF	x
PEUGEOT									
Partner (2002>)	+			R134a	11/02 ▸	6450NW	**818981**	EVA	
RENAULT									
Scénic II	+			R134a	05/03 ▸	7701207874	**817709**	EVA	240 225
RENAULT									
Trafic				R134a		7701473281	**•515138**	EVA	
SAAB									
9-3 (2002>)	+		+	R134a	09/02 ▸	93172073	**817717**	EVA	280 245
9-3 (2002>)	+		+	R134a	09/02 ▸	93172074	**817718**	EVA	280 245
SEAT									
Altea	+		+	R134a	03/04 ▸	1K2820103	**817720**	EVA	245 240
Altea	+		+	R134a	03/04 ▸	1K1820103A	**817719**	EVA	245 240
Leon II (2005>)	+		+	R134a	07/05 ▸	1K1820103A	**817719**	EVA	245 240
Leon II (2005>)	+		+	R134a	07/05 ▸	1K2820103	**817720**	EVA	245 240
Toledo (2004>)	+		+	R134a	09/04 ▸	1K1820103A	**817719**	EVA	245 240
Toledo (2004>)	+		+	R134a	09/04 ▸	1K2820103	**817720**	EVA	245 240
SKODA									
Octavia (2004>)	+		+	R134a	05/04 ▸	1K1820103A	**817719**	EVA	245 240
Octavia (2004>)	+		+	R134a	05/04 ▸	1K2820103	**817720**	EVA	245 240
Superb	+			R134a	12/01 ▸	8D1820103D	**817521**	EVA	261 200
VAUXHALL									
Astra IV (98>)	+			R134a	04/98 ▸	9117287	**817518**	EVA	280 210
Corsa II	+			R134a	09/00 ▸	90535096	**817530**	EVA	242 203
Signum	+		+	R134a	06/03 ▸	93172074	**817718**	EVA	280 245
Vectra (2002>)	+		+	R134a	04/02 ▸	93172074	**817718**	EVA	280 245
VAUXHALL									
Combo (2002>)	+			R134a	10/01 ▸	90535096	**817530**	EVA	242 203
VOLKSWAGEN									
Eos	+		+	R134a	05/06 ▸	1K1820103	**817719**	EVA	245 240

• **New** Nouveau **Neu** Nuevo **Novo** Nuovo **Nieuw** Nowi **Новый** Novy **Nou** Yeni **Νέους**

	A/C			GAZ		OE	Valeo	EVA / BF	x
VOLKSWAGEN (.../...)									
Eos	+		+	R134a	05/06 ▸	1K2820103	**817720**	EVA	245 240
Golf V (2003>)	+		+	R134a	10/03 ▸	1K1820103A	**817719**	EVA	245 240
Golf V (2003>)	+		+	R134a	10/03 ▸	1K2820103	**817720**	EVA	245 240
Golf Plus (2005>)	+		+	R134a	01/05 ▸	1K1820103A	**817719**	EVA	245 240
Golf Plus (2005>)	A+		+	R134a	01/05 ▸	1K2820103	**817720**	EVA	245 240
Jetta (2005>)	+		+	R134a	08/05 ▸	1K1820103A	**817719**	EVA	245 240
Jetta (2005>)	+		+	R134a	08/05 ▸	1K2820103	**817720**	EVA	245 240
Passat (96>2004)	+			R134a	10/96 ▸ 03/05	8D1820103D	**817521**	EVA	261 200
Passat (2005>)	+		+	R134a	03/05 ▸	1K1820103A	**817719**	EVA	245 240
Passat (2005>)	A+		+	R134a	03/05 ▸	1K2820103	**817720**	EVA	245 240
Touran	+		+	R134a	02/03 ▸	1K1820103A	**817719**	EVA	245 240
Touran	+		+	R134a	02/03 ▸	1K2820103	**817720**	EVA	245 240
VOLKSWAGEN									
Caddy (2004>)	+		+	R134a	02/04 ▸	1K1820103A	**817719**	EVA	245 240
Caddy (2004>)	+		+	R134a	02/04 ▸	1K2820103	**817720**	EVA	245 240

• **New** Nouveau **Neu** Nuevo **Novo** Nuovo **Nieuw** Nowi **Новый** Nový **Nou** Yeni **Νέους**

EVA

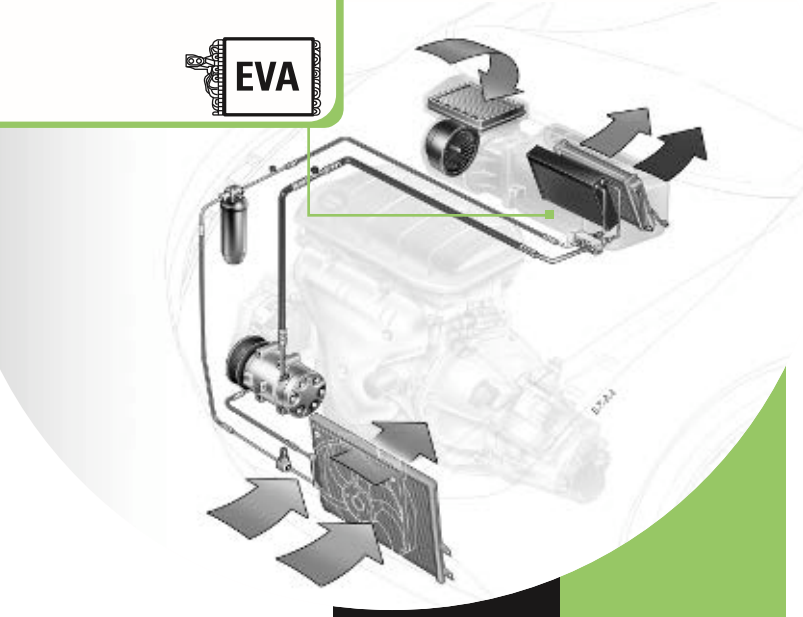

EVAPORATOR
EVAPORATEUR
VERDAMPFER
EVAPORADOR
EVAPORADOR
EVAPORATORE
VERDAMPER
PAROWNIK
ИСПАРИТЕЛЬ
VÝPARNÍK
EVAPORATOR
EVAPORATÖR
Εξατμιστής

EVA

TECH.COD.

CT	Valeo	
VALEO		
007130D/S	**817717**	
007135B/S	**817718**	
984200P	**817719**	
984201G	**817720**	
F817339M	**817339**	
F817467H	**817467**	
N100878D	**817709**	
TD167	**817338**	
TD243	**817680**	
TD258	**817682**	
TD259	**817683**	
TD45	**817093**	
TD77	**817095**	
TD83	**817080**	
TD85	**817328**	

CT	Valeo	

CT	Valeo	

Valeo 515131

EVA

BMW 64118385560
LAND ROVER JQB000160

Valeo 817093 285x203x79

EVA

TD45

PEUGEOT 6444A3

Valeo 515132

EVA

ALFA ROMEO 77365580

Valeo 817095 285x203x79

EVA

TD77

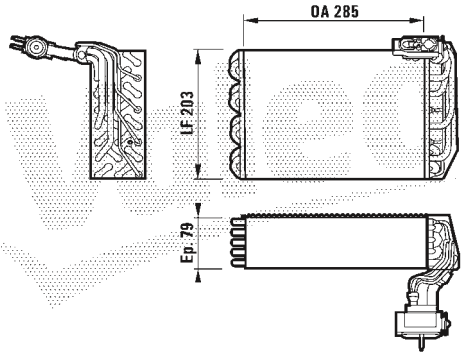

PEUGEOT 6450CF

Valeo 515138

EVA

F964632X

RENAULT 7701473281

Valeo 817328 286x200x60

EVA

MERCEDES 0008306958

Valeo 817080 263x229x79

EVA

TD83

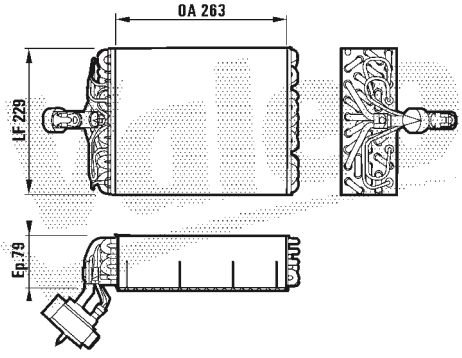

CITROËN 6461C0

Valeo 817338 285x203x79

EVA

Picture not available
Image non disponible
Nicht verfügbares Bild
Imagen no disponible
Immagine non disponibile
Zdjęcie niedostępne

PEUGEOT 6450CG

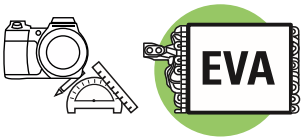

Valeo 817339 — 286x200x75

EVA

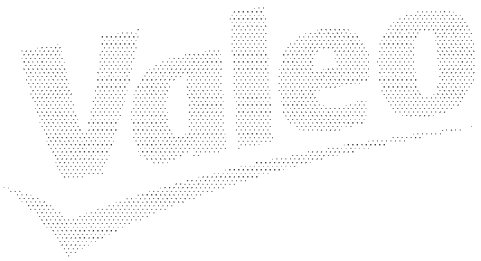

PEUGEOT	6450JT

Valeo 817512 — 330x205x67

EVA

BMW	64118391277
BMW	64118391277

Valeo 817467 — 330x203x84

EVA

F817467H

PEUGEOT	6450HA
PEUGEOT	6450JS

Valeo 817513 — 320x204x67

EVA

BMW	64118372191

Valeo 817510 — 285x191x67

EVA

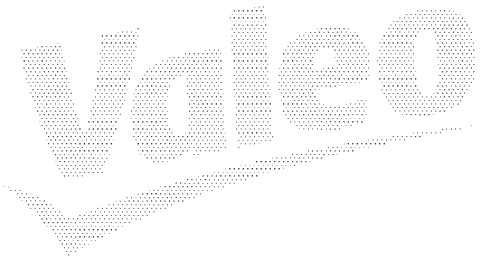

BMW	64118391356

Valeo 817514 — 340x241x67

EVA

MERCEDES	2028300758

Valeo 817511 — 259x178x65

EVA

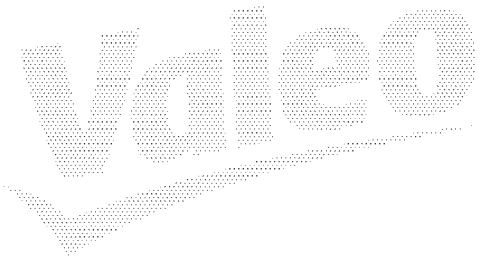

BMW	64118372772

Valeo 817515 — 298x229x72

EVA

MERCEDES	1248300658

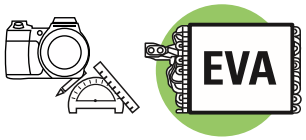

Valeo

Valeo 817516 — 307x237x65

EVA

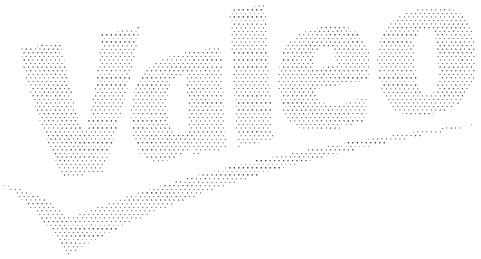

MERCEDES	2108300958

Valeo 817517 — 207x140x67

EVA

MERCEDES	1408302358

Valeo 817518 — 280x210x65

EVA

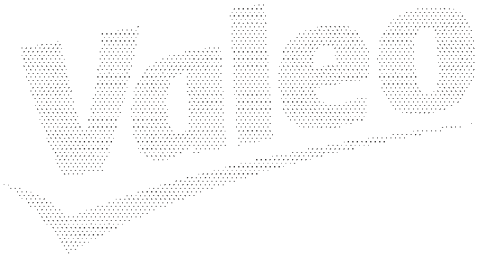

OPEL	1618146
VAUXHALL	9117287

Valeo 817519 — 225x211x65

EVA

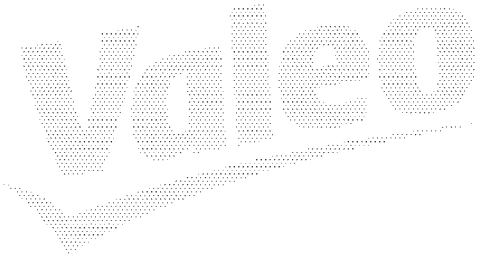

PEUGEOT	6444C6

Valeo 817520 — 263x177x67

EVA

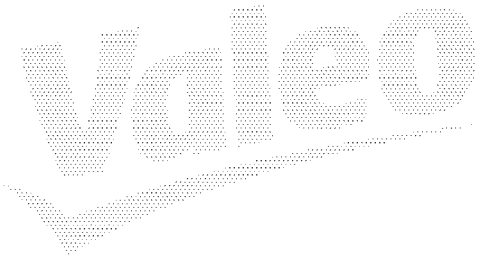

PEUGEOT	6450CH

Valeo 817521 — 261x200x65

EVA

AUDI	8D1820103D
SKODA	8D1820103D
VOLKSWAGEN	8D1820103D

Valeo 817530 — 242x203x62

EVA

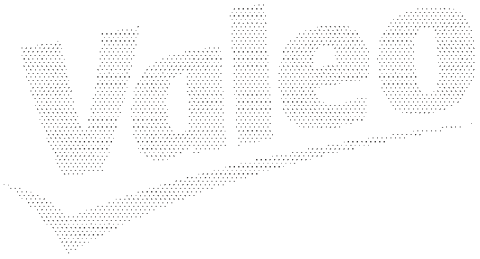

OPEL	6845612
VAUXHALL	90535096

Valeo 817680 — 225x209x60

EVA

TD243

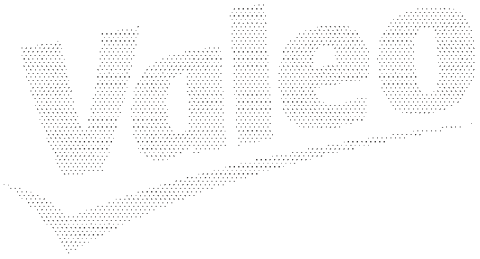

NISSAN	27280AX100

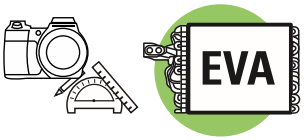

Valeo 817682 — 225x209x60

EVA

TD258

NISSAN	27280AX360

Valeo 817683 — 225x209x60

EVA

TD259

NISSAN	27280AX300

Valeo 817709 — 240x225x60

EVA

N100878D

RENAULT	7701207874

Valeo 817717 — 280x245x60

EVA

007130D/S

OPEL	6845622
SAAB	93172073

Valeo 817718 — 280x245x60

EVA

007135B/S

OPEL	6845623
SAAB	93172074
VAUXHALL	93172074

Valeo 817719 — 245x240x60

EVA

984200P

AUDI	1K1820103A
SEAT	1K1820103A
SKODA	1K1820103A
VOLKSWAGEN	1K1820103A

Valeo 817720 — 245x240x60

EVA

984201G

AUDI	1K2820103
SEAT	1K2820103
SKODA	1K2820103
VOLKSWAGEN	1K2820103

Valeo 818201

EVA

BMW	64116934781

Valeo 818975

EVA

Picture not available
Image non disponible
Nicht verfügbares Bild
Imagen no disponible
Immagine non disponibile
Zdjęcie niedostępne

TOYOTA	8850152041

Valeo 818981

EVA

CITROËN	6450NW
PEUGEOT	6450NW

EVA

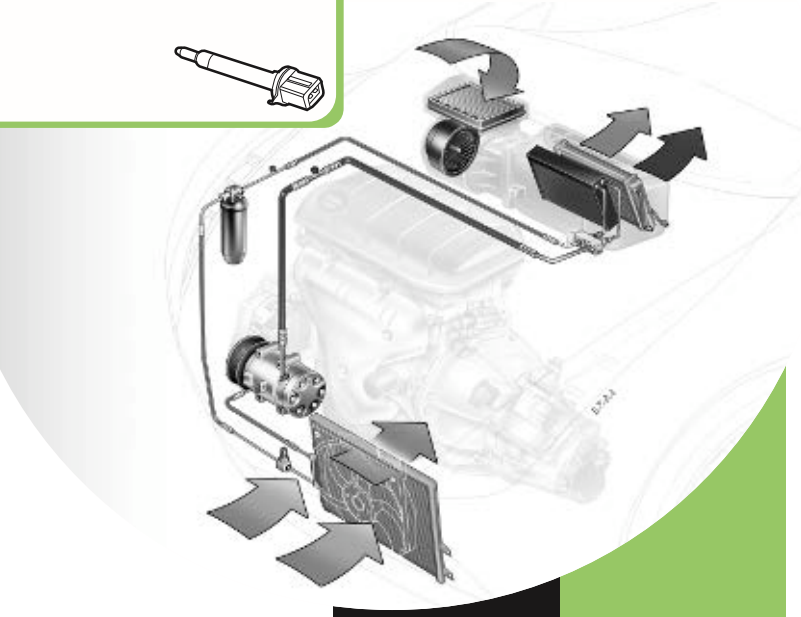

SENSOR
SONDE
SENSOR
SONDA
SONDA
SONDA
SENSOR
CZUJNIK
Датчик
SENZOR
SENSÖR
Αισθητήρας

4.5

Valeo

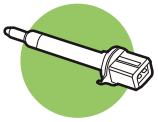

	A/C				OE	Valeo
CITROËN						
AX (91>98) 5501 ▸ 6300	+			12/91 ▸ 02/94	6445K1	**508761**
AX (91>98) 6301 ▸	+			02/94 ▸ 07/98	6445R8	**508762**
C2				09/03 ▸ 05/05	6445RP	**509805**
C3 (2002>2005)				04/02 ▸ 10/05	6445RP	**509805**
C3 Pluriel ▸ 10429				05/03 ▸ 05/05	6445RP	**509805**
C5 (2001>2004) 9319 ▸				05/02 ▸ 08/04	6445RP	**509805**
C5 (2001>2004)	+			02/01 ▸ 08/04	6445HZ	**509356**
Fukang	+		With Diaphragm	07/96 ▸	6445S4	**508784**
Saxo	+			03/96 ▸	6445R8	**508762**
Xantia (93>2002) 7613 ▸ 8350	+		With Diaphragm	09/97 ▸ 09/99	6445AZ	**508777**
Xantia (93>2002) 6226 ▸	+		With Diaphragm	11/93 ▸ 05/02	6445S4	**508784**
XM (89>94)	+			05/89 ▸ 06/94	6445P9	**508782**
XM (94>2001)	+		With Diaphragm	07/94 ▸ 07/01	6445S4	**508784**
Xsara (97>2000) ▸ 8350	+		With Diaphragm	09/97 ▸ 09/99	6445AZ	**508777**
Xsara (97>2000)	+		With Diaphragm	07/97 ▸ 08/00	6445S4	**508784**
Xsara (2000>) ▸ 9318	+			09/00 ▸ 04/02	6445HZ	**509356**
Xsara (2000>) 9319 ▸	A+			05/02 ▸ 08/05	6445RP	**509805**
ZX	+		With Diaphragm	11/93 ▸ 07/98	6445S4	**508784**
CITROËN						
Berlingo (96>2002)	+		With Diaphragm	07/96 ▸ 11/02	6445S4	**508784**
Berlingo (2002>)				12/02 ▸	6445SS	**509804**
MERCEDES						
200/300 (123) 012309 ▸	+			08/79 ▸ 01/85	0008306872	**508763**
V Class (638/2)	+			10/96 ▸ 12/02	0008306872	**508763**
MERCEDES						
Vito (96>2003)	+			01/96 ▸ 09/03	0008306872	**508763**
NISSAN						
Micra (K12) (2003>)	M +		Thermoswitch with sensor	01/03 ▸	27675AX100	**509602**

EVA

• **New** Nouveau **Neu** Nuevo **Novo** Nuovo **Nieuw** Nowi **Новый** Novy **Nou** Yeni **Νέους**

	A/C				OE	Valeo
NISSAN (.../...)						
Micra (K12) (2003>)	A+			01/03 ▸	27675AX010	**509601**
Note	A+			09/05 ▸	27675AX010	**509601**
PEUGEOT						
106 (91>96)	+			09/91 ▸ 02/94	6445K1	**508761**
106 (91>96)	+			02/94 ▸ 03/96	6445R8	**508762**
106 (96>2003)	+			03/96 ▸ 07/03	6445R8	**508762**
1007				04/05 ▸	6445RP	**509805**
405 (92>96) S71053481 ▸	+		With Diaphragm	07/92 ▸ 10/96	6445S4	**508784**
406 (95>2004)	+		With Diaphragm	10/95 ▸ 04/04	6445S4	**508784**
508				03/11 ▸	6436P3	**515134**
605 (89>99)	+			10/89 ▸ 10/93	6445P9	**508782**
605 (94>99)	+		With Diaphragm	07/94 ▸ 05/99	6445S4	**508784**
607	+		With Diaphragm	05/00 ▸	6445S4	**508784**
PEUGEOT						
Partner (96>2002)	+		With Diaphragm	06/96 ▸ 11/02	6445S4	**508784**
Partner (2002>)				12/02 ▸	6445SS	**509804**
Ranch (2002>)				12/02 ▸	6445SS	**509804**
RENAULT						
Super 5	+			07/84 ▸ 05/90	7701039302	**508787**
R19	+			07/88 ▸ 04/92	7701044814	**508791**
R21	+			06/86 ▸ 08/95	7701039604	**508761**
Clio II (98>2001) ▸ 981030	+			03/98 ▸	7701044814	**508791**
Laguna (98>2000)	+			05/98 ▸ 12/00	7701039302	**508787**
Mégane (95>99)	+			11/95 ▸ 02/99	7701039603	**508792**
Mégane Scénic (96>99)	+			10/96 ▸ 08/99	7701205083	**508792**
Safrane	+			05/92 ▸ 11/00	7701039603	**508792**
RENAULT						
Express	+			09/85 ▸ 08/94	7701039302	**508787**
Express	+		1.4	01/94 ▸ 08/97	7701040976	**508789**
Extra	+			09/85 ▸ 08/94	7701039302	**508787**
Extra	+		1.4	01/94 ▸ 08/97	7701040976	**508789**
Rapid (85>91)	+			09/85 ▸ 08/91	7701039302	**508787**

• **New** Nouveau **Neu** Nuevo **Novo** Nuovo **Nieuw** Nowi **Новый** Nový **Nou** Yeni **Νέους**

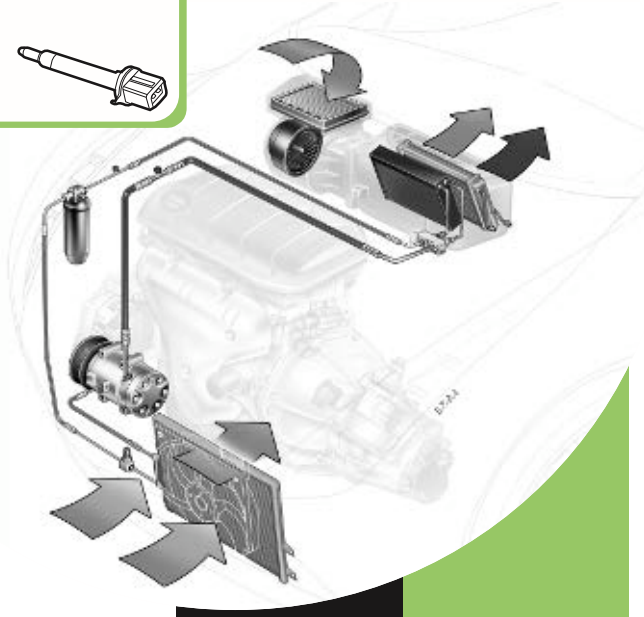

SENSOR
SONDE
SENSOR
SONDA
SONDA
SONDA
SENSOR
CZUJNIK
Датчик
SENZOR
SENSÖR
Αισθητήρας

CT	Valeo	
VALEO		
650195G0	**508761**	
650724N0	**508762**	
F602588E	**508792**	
F660247W	**509356**	
F667206W	**509602**	
F667207A	**509601**	

CT	Valeo	

CT	Valeo	

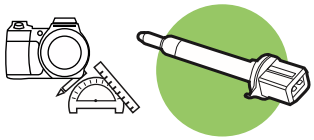

Valeo 508761

650195G0

CITROËN	6445K1
PEUGEOT	6445K1
RENAULT	7701039604

Valeo 508762

650724N0

CITROËN	6445R8
PEUGEOT	6445R8

Valeo 508763

MERCEDES	0008306872

Valeo 508777

CITROËN	6445AZ

Valeo 508782

CITROËN	6445P9
PEUGEOT	6445P9

Valeo 508784

CITROËN	6445S4
PEUGEOT	6445S4

Valeo 508787

RENAULT	7701039302

Valeo 508789

RENAULT	7701040976

Valeo 508791

RENAULT	7701044814

Valeo 508792

F602588E

RENAULT	7701039603
RENAULT	7701205083

Valeo 509356

F660247W

CITROËN	6445HZ
CITROËN	6445HZ

Valeo 509601

F667207A

NISSAN	27675AX010

Valeo 509602

F667206W

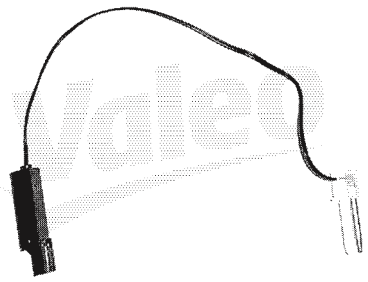

NISSAN	27675AX100

Valeo 509804

CITROËN	6445SS
PEUGEOT	6445SS

Valeo 509805

CITROËN	6445RP
PEUGEOT	6445RP

Valeo 515134

PEUGEOT	6436P3

EVA

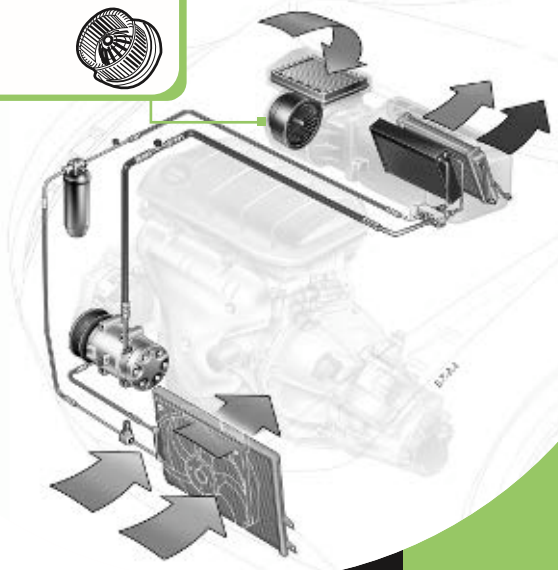

BLOWER MOTOR
PULSEUR
INNENRAUM-GEBLÄSEMOTOREN
GMV CLIMATIZACION
GMV CLIMATIZAÇÃO
GMV ABITACOLO
KACHELVENTILATOR
DMUCHAWA
МОТОР ВЕНТИЛЯТОРА
MOTOR VENTIL TORU
VENTILATOR DE HABITACLU
KALORIFER MOTORU
Ανεμιστήρας

4.6

EN

Function
The blower ensures an air flow from outside to inside the cabin or air circulation within the cabin if recycling function is on. It is located in the HVAC module between the cabin air filter and the evaporator / heater core. There are two types of blower :
> Helicoidal (used in old cars, it is simple but has a high noise level)
> Centrifugal (adapted to strong pressures, it has a low noise level)

Replacement
The blower must be replaced after a crash. The blower must also be replaced if worn by penetration.
Typical problems with blowers :
- Noises due to conjestion in the air ducts
- Engine axis misaligned
- Faulty speed regulators (Automatic A/C)
- Faulty Engine

Repair recommendations
- Choose the right blower; according to car manufacturers and vehicle equipment. On some car models; the blower can be different between a car with an automatic or manual AC system.

- Respect the rotating direction before fitting the blower.

- Make sure the axis of the blower is well aligned

FR

Fonction
Le pulseur assure un flux d'air provenant de l'extérieur ou de l'intérieur en mode recyclage. Il est localisé dans le module de climatisation sous le tableau de bord.
Il existe deux technologies de pulseur:
> hélicoidal (véhicules anciens, simple mais à haut niveau sonore)
> centrifuge (adapté aux fortes pressions, faible niveau sonore)

Remplacement
Le pulseur doit être remplacé en cas de panne ou de collision. Le pulseur doit être remplacé en cas de pénétration de débris.
Les points les plus critiques sont:
- Bruits dus à la présence de détritus dans les conduits d'air
- Axe du moteur décentré
- Défaut de module de variation de vitesse (clim automatique)
- Défaut moteur pulseur

Recommandations Valeo pour la Réparation
- Choisir le bon pulseur: correspondant à l'application véhicule et conforme à l'origine. Sur certains modèles de véhicule, le pulseur peut varier entre un véhicule à clim manuelle et un véhicule à clim automatique.

- Respecter le sens de rotation et le sens de l'alimentation lors du montage du pulseur

- Contrôler l'alignement correct de l'axe du pulseur.

DE

Funktion
Das Gebläse gewährleistet den Luftstrom von außen in den Fahrzeug-Innenraum oder - sofern die Umlauffunktion eingeschaltet ist - innerhalb des Innenraums. Es befindet sich innerhalb des HVAC-Moduls, zwischen dem Inneraum-Luftfilter und dem Verdampfer bzw. Heizkörper. Zwei Gebläsetypen stehen zur Verfügung:
> Schraubengebläse (bei älteren Fahrzeugmodellen; unkompliziert, aber hoher Geräuschpegel)
> Schleudergebläse (geeignet für hohen Druck, niedriger Geräuschpegel)

Austausch
Das Gebläse muss im Fall einer Kollision sowie bei Verschleiß ausgewechselt werden.
Häufige Probleme mit dem Gebläse:
- Geräusche aufgrund der Ablagerung von Schmutz in den Luftleitungen
- Motorachse schlecht ausgerichtet
- Funktionsstörung der Geschwindigkeitsregler (automatische Klimaanlagen)
- Motorfunktionsstörung

Reparaturempfehlungen
- Wählen Sie das adäquate, dem Automobilherstellerteil bzw. der Fahrzeugausrüstung entsprechende Gebläse. In bestimmten Fahrzeugmodellen werden bei automatischen und manuellen Klimaanlagen verschiedene Gebläse verwendet
- Vor dem Installieren des Gebläses die Drehrichtung prüfen
- Das Gebläse genau in der Achse platzieren

SP

Función

El impulsor crea un flujo de aire del exterior en el habitáculo o la re-circulación del aire dentro de él si se activa la función de reciclado. Está situado en el módulo de calefacción, ventilación y aire acondicionado, entre el habitáculo y el evaporador / radiador de calefacción.
Hay dos tipos de ventilador:
> Helicoidal (utilizado en vehículos antiguos, sencillo, pero de elevado nivel de ruido),
> Centrífugo (adaptado a presiones elevadas y de bajo nivel de ruido).

Sustitución

El impulsor debe sustituirse después de averia, así como en caso de penetración de cuerpos extraños.

Problemas típicos con el impulsor:
- Ruidos debido a cuerpos extraños en los conductos de aire.
- Eje del motor desalineado.
- Reguladores de velocidad defectuosos (climatización automática).
- Motor defectuoso.

Recomendaciones para la reparación
- Elegir el ventilador adecuado, conforme a las indicaciones del fabricante del vehículo y de equipos. En algunos modelos de vehículos, el ventilador puede ser diferente según que el sistema sea automático o manual.
- Respetar el sentido de rotación antes de montar el impulsor.
- Verificar que el eje del ventilador esté bien alineado.

IT

Funzione

Il GMV abitacolo garantisce l'immissione dell'aria esterna nell'abitacolo e la circolazione dell'aria all'interno dell'abitacolo, se la funzione ricircolo è attivata. Si trova nel modulo HVAC fra il filtro abitacolo e l'evaporatore o al radiatore di riscaldamento. Esistono due tipi di GMV: Elicoidale (utilizzato nei vecchi modelli di automobili, semplice ma con un elevato livello di rumorosità), Centrifugo (adatto a forti pressioni, con un basso livello di rumorosità).

Sostituzione

Il GMV abitacolo deve essere sostituito in caso di rottura ed usura.

Problemi più frequenti relativi ai GMV abitacolo:
- Rumori dovuti a detriti presenti nei condotti dell'aria
- Motore elettrico/ventola fuori asse
- Regolatori di velocità/ resistenze interrotti
- Motore usurato

Raccomandazioni Valeo per la riparazione
- Scegliere il GMV adatto, conforme alle specifiche del costruttore del veicolo e ai relativi componenti. In alcuni modelli d'auto, il ventilatore può essere diverso secondo che il veicolo sia provvisto di un sistema di aria condizionata automatico o manuale.
- Rispettare la direzione di rotazione prima di montare il GMV.
- Assicurarsi che l'asse del ventilatore sia correttamente allineato

NL

Functie

De kachelventilator zorgt dat er lucht van buitenaf naar het interieur stroomt of dat de lucht in het interieur circuleert, als de recycling functie ingeschakeld is. De ventilator bevindt zich in de HVAC module tussen de interieurfilter en de verdamper / kachelradiator.
Er zijn twee typen kachelventilator:
> Helicoïdaal (gebruikt in oude auto's, deze is eenvoudig maar maakt veel lawaai)
> Centrifugaal (aangepast aan hoge drukwaarden, met een laag geluidsniveau)

Vervanging

De kachelventilator moet worden vervangen na een aanrijding, en wanneer deze geperforeerd is of versleten.

Problemen die het meest voorkomen bij kachelventilator :
- Lawaai veroorzaakt door vuil in de luchtleidingen
- Verkeerde uitlijning van de motoras
- Defecte toerentalregelaars (automatische airconditioning)
- Defecte motor

Aanbevelingen bij de reparatie
- Kies de juiste kachelventilator overeenkomstig de specificaties van de autoconstructeur en de uitrusting van het voertuig. Bij sommige automodellen kan de kachelventilator verschillen bij een model met een automatisch of handbediend airconditioningsysteem.
- Merk de draairichting aan, voordat u de kachelventilator monteert.
- Controleer of de as van de kachelventilator goed is uitgelijnd.

PL

Funkcja

Dmuchawa zapewnia przepływ powietrza z zewnątrz do wewnątrz kabiny lub cyrkulację powietrza w kabinie jeśli włączona jest funkcja wewnętrznego obiegu powietrza. Znajduje się ona w układzie A/C pomiędzy filtrem kabinowym i parownikiem / nagrzewnicą. Istnieją dwa rodzaje dmuchaw:
> Spiralne (używane w starych samochodach, bardzo proste ale o wysokim poziomie hałasu)
> Odśrodkowe (dostosowane do wysokich ciśnień, o niskim poziomie hałasu)

Wymiana

Dmuchawa musi być wymieniona po uszkodzeniu w wyniku wypadku lub w przypadku zużycia.
Typowe problemy z dmuchawami:
- Hałas z powodu zanieczyszczeń w kanałach wentylacyjnych
- Niesymetryczny wirnik dmuchawy
- Uszkodzony regulator prędkości (Automatyczna klimatyzacja)
- Uszkodzony silnik

Zalecenia naprawy
- Wybierz odpowiednią dmuchawę, zgodnie ze specyfikacją producenta samochodu i wyposażeniem pojazdu. W niektórych pojazdach dmuchawa może być inna w modelach z automatyczną lub manualną klimatyzacją.
- Zwróć uwagę na kierunek obrotu przed zamontowaniem dmuchawy.
- Upewnij się, że oś dmuchawy jest prawidłowo ułożona

RU

Функция

Вентилятор обеспечивает поступление потока воздуха снаружи внутрь салона или циркуляцию воздуха внутри салона, если включена функция циркуляции воздуха. Мотор располагается в модуле ОВКВ между салонным фильтром и испарителем / сердцевиной нагревателя. Существует два типа вентилятора :
> спиральная (используется в старых автомобилях; простая конструкция, но высокий уровень шума)
> центробежная (подходит для сильных давлений; низкий уровень шума)

Замена

Вентилятор следует заменить после аварии. Вентилятор также следует заменить в случае износа и прорыва.
Типичные проблемы с вентиляторами :
- Шум из-за засорения воздуховодов
- Смещен вал двигателя
- Неисправные регуляторы скорости (автоматическое кондиционирование)
- Неисправности в двигателе

Рекомендации по ремонту
- Выбрать подходящий вентилятора согласно требованиям производителя автомобиля и установленного оборудования. На некоторых моделях автомобилей могут использоваться различные вентиляторы для автомобилей с системой климатического контроля или автоматического кондиционирования
- Учесть направление вращения перед монтажом вентилятора.
- Убедиться в правильности центровки вала

CZ

Funkce
Ventilátor zajišťuje průtok vzduchu z vnějšku vozidla dovnitř kabiny nebo cirkulaci vzduchu v rámci kabiny ve funkci vnitřní cirkulace. Je umístěn v modulu HVAC mezi kabinovým vzduchovým filtrem a jednotkou výparníku/topení. Existují dva typy ventilátorů:
- Axiální (používaný ve starších vozidlech, je jednodušší, ale má vysokou úroveň hluku)
- Odstředivý (uzpůsobený pro větší tlaky, má nižší úroveň hluku)

V měna
Ventilátor musí být vyměněn po nehodě. Ventilátor také musí být vyměněn, pokud je proražen jeho kryt.
Typické problémy s ventilátorem:
- Hluk v důsledku zúžení vzduchových kanálů
- Poškozená hřídel motorku
- Porucha regulátoru otáček (automatická klimatizace)
- Poškozený motorek

Doporučení pro opravy
- Zvolte správný ventilátor, podle údajů výrobce vozidla a vybavení vozidla. V některých modelech vozidel se ventilátor může lišit pro vozidla s automatickou nebo manuální klimatizací.
- Před montáží ventilátoru překontrolujte směr otáčení.
- Zajistěte správnou polohu osy ventilátoru.

HU

Szerepe
A ventilátor biztosítja a légcserét a környező levegő és az utastér között, illetve az utastéren belüli keringését, ha a belső keringtetés be van kapcsolva. A HVAC modulban helyezkedik el, a pollenszűrő és az elpárologtató között. Két fajtát különböztetünk meg:
- Spirálos (régebbi járműveken, egyszerű de zajos megoldás)
- Centrifugális (nyomásálló és alacsony a zajszintje)

Cseréje
A ventilátort általában baleset vagy korrózió miatt szokták cserélni.
Gyakran el forduló meghibásodások:
- Zajos működés a szellőzőrendszerben lévő dugulások miatt.
- A ventilátor tengelye el van ferdülve.
- Meghibásodott a vezérlő elektronika (automata klímaberendezésnél)
- Meghibásodott az elektromotor.

Javítási tanácsok
- Válasszon a jármű típusának, modelljének és felszereltségének megfelelő típusú ventilátort.
A ventilátor egyes járműveken különbözhet a manuális és automata klímaberendezéstől függően.
- Beszerelésnél ügyeljen a forgás irányára.
- Győződjön meg arról, hogy a ventilátor tengelye

RO

Funcţiune:
Ventilatorul asigură curentul de aer din afară în cabină, respectiv circulaţia aerului în cabină dacă funcţiunea de recirculare este activată. Se află în modulul de climatizare între filtrul de aer şi evaporatorul / radiatorul de încălzire. Sunt două tipuri de ventilator:
- Ventilator elicoidal (folosit în maşini vechi, este simplu dar are un nivel ridicat de zgomot)
- Ventilator centrifugal (adaptat la presiuni mari, are un nivel scăzut de zgomot)

Înlocuire:
Ventilatorul trebuie înlocuit în caz de accident, de defect sau perforare.

Probleme tipice cu ventilatorul
- Zgomot datorită congestiei în conducta de aer
- Deplasare a axelor motorului
- Regulatoare de turaţie defecte (automat A/C)
- Motor defect

Recomandări de reparaţie:
- Alegeţi ventilatorul potrivit în funcţie de producător şi aparatura vehiculului. La anumite modele de maşini ventilatorul poate fi diferit în funcţie de sistem de aer condiţionat automat sau manual.
- Respectaţi direcţia de rotaţie la montarea ventilatorului.
- Verificaţi dacă axa ventilatorului este corect centrată.

TU

İşlev:
Kalorifer motoru (fan) dışarıdan kabin içine hava girişini ya da dahili çevirim ayarı seçiliyse iç havanın çevrimini sağlar. Klima modülü içinde kabin hava filtresiyle kalorifer radyatörü/evaporatör arasında konumlandırılmıştır. İki çeşit kalorifer motoru vardır:
- Pervaneli tip (daha çok eski araçlarda görülen basit ve gürültülü modeller)
- Türbinli tip (yüksek basınç sağlayabilen ve düşük ses düzeylerinde çalışan modeller)

Değişim:
Kalorifer motoru çalışmama ya da düzensiz - gürültülü çalışma gibi arızi hallerde değişir.

Kalorifer motorunda en çok rastlanan sorunlar
- Hava kanallarından gelen yüksek ses ve gürültü
- Motorunun aksındaki dengesizlik
- Hatalı hız ayarı (Otomatik klimalarda)
- Arızalı motor bölümü

Onarım önerileri:
- Araç üreticisi tarafından belirlenmiş model uygulamasına göre ürün seçimi. Kalorifer motoru birçok araç modelinde aracın manual ya da otomatik klimalı olmasına bağlı olarak değişiklik gösterir.
- Parçanın takılması sırasında dönüş yönüne dikkat edilmesi gerekir.
- Motorunun aksının dengeli olduğuna dikkat edilmelidir.

GR

Λειτουργία :
Ο ανεμιστήρας εξασφαλίζει τη ροή του αέρα από έξω προς την καμπίνα ή την κυκλοφορία του αέρα μέσα στην καμπίνα εάν η λειτουργία ανακύκλωσης είναι ανοικτή (ON). Βρίσκεται στο HVAC ανάμεσα στο φίλτρο καμπίνας και τον εξατμιστή / καλοριφέρ.
Υπάρχουν δύο τύποι ανεμιστήρων :
> Ο Ελικοειδής (σε παλαιά οχήματα, είναι απλός αλλά έχει υψηλό επίπεδο θορύβου).
> Ο Φυγόκεντρος (προσαρμόζεται στις ισχυρές πιέσεις, έχει χαμηλό επίπεδο θορύβου).

Αντικατάσταση :
Ο ανεμιστήρας πρέπει να αντικατασταθεί σε περίπτωση τρακαρίσματος η βλάβης.
Πρέπει επίσης να αντικατασταθεί σε περίπτωση διείσδυσης θραυσμάτων.

Συνηθισμένα προβλήματα των ανεμιστήρων :

Θόρυβοι που οφείλονται σε θραύσματα στους αεραγωγούς.
Κακώς ευθυγραμμισμένος άξονας του μοτέρ.
Λανθασμένες ρυθμίσεις ταχύτητας (Αυτόματο Κλιματιστικό).
Ελαττωματικό μοτέρ.

Συστάσεις απο την Valeo για την επισκευή :

- Επιλέξτε το σωστό ανεμιστήρα, ανάλογα με το όχημα και τις προδιαγραφές του κατασκευαστή. Σε μερικά μοντέλα αυτοκινήτων, ο ανεμιστήρας μπορεί να διαφέρει από αυτόματο ή χειροκίνητο σύστημα Κλιματισμού.
- Πριν συνδέσετε τον ανεμιστήρα λάβετε υπ' όψη σας την κατεύθυνση περιστροφής.
- Βεβαιωθείτε ότι ο άξονας του ανεμιστήρα είναι σωστά ευθυγραμμισμένος.

	A/C				OE	Valeo
ALFA ROMEO						
Giulietta	+/-			06/10 ▸	77365569	**715248**
Giulietta	+/-		Cold Countries	06/10 ▸	77365861	**715249**
AUDI						
80 (86>95)	+			09/86 ▸ 07/95	8A1820021	**698215**
90 (84>92)	+			04/87 ▸ 01/92	357820021	**698157**
A2 (2000>2005)	+			06/00 ▸ 08/05	6Q1820015H	**715240**
A3 (96>2003)	+/-			09/00 ▸ 06/03	1J1819021C	**698262**
A3 (96>2003)	+/-			09/96 ▸ 06/03	1J2819021C	**698263**
A3 (2003>)	-			05/03 ▸	1K1819015	**698809**
A3 (2003>)	-			05/03 ▸	1K2819015	**698810**
A3 (2003>)	M+			05/03 ▸	1K1819015	**698809**
A3 (2003>)	M+			05/03 ▸	1K2819015	**698810**
A3 (2003>)	A+			05/03 ▸	1K1820015F	**698811**
A3 (2003>)	A+			05/03 ▸	3C2820015F	**698812**
A4 (94>2000) ▸ 8D-T-400000	+			11/94 ▸ 07/98	8A1820021	**698215**
A4 (94>2000)	+			03/96 ▸ 11/00	8D2820021	**698216**
A4 (2000>)	+/-			12/00 ▸	8E1820021E	**698813**
A4 (2000>)	+/-			12/00 ▸	8E2820021E	**698814**
Cabriolet (8G)	+			06/91 ▸ 08/00	8A1820021	**698215**
A4 Cabriolet (2002>)	+/-			04/02 ▸	8E1820021E	**698813**
A4 Cabriolet (2002>)	+/-			04/02 ▸	8E2820021E	**698814**
Coupe (88>96)	+			11/88 ▸ 05/95	357820021	**698157**
Coupe (88>96)	+			11/88 ▸ 01/96	8A1820021	**698215**
RS2 (94>95) 03/94 ▸ 06/95	+				8A1820021	**698215**
RS4 Quattro (2005>)	A+			11/05 ▸	8E1820021E	**698813**
RS4 Quattro (2005>)	A+			11/05 ▸	8E2820021E	**698814**
S3 (98>2003)	+/-			11/98 ▸ 06/03	1J1819021C	**698262**
S3 (98>2003)	+/-			11/98 ▸ 06/03	1J2819021C	**698263**
S3 (2006>)	+/-			10/06 ▸	1K1819015	**698809**
S3 (2006>)	+/-			10/06 ▸	1K2819015	**698810**
S4 (97>99)	A+			10/97 ▸ 01/99	8D2820021	**698216**
S4 (2003>)	+			03/03 ▸	8E1820021E	**698813**
S4 (2003>)	+			03/03 ▸	8E2820021E	**698814**
TT	+/-			10/98 ▸ 08/06	1J1819021C	**698262**
TT	+/-			10/98 ▸ 08/06	1J2819021C	**698263**
BMW						
1 series E81/E87	+/-			09/04 ▸	64119144200	**715048**

• **New** Nouveau **Neu** Nuevo **Novo** Nuovo **Nieuw** Nowi **Новый** Novy **Nou** Yeni **Νέους**

	A/C				OE	Valeo
BMW (.../...)						
1 series E81/E87	+/-			09/04 ▸	64119144201	**715049**
3 series E90/E91/E92	+/-			03/05 ▸	64119144200	**715048**
3 series E90/E91/E92	+/-			03/05 ▸	64119144201	**715049**
5 series E39	A+			09/95 ▸ 04/04	64118385558	**715007**
M5 E39	A+			07/99 ▸ 06/03	64118385558	**715007**
X5 (2000>2006)	A+			01/00 ▸ 11/06	64118385558	**715007**
CADILLAC						
BLS	A+			03/05 ▸ 09/10		**698805**
CITROËN						
AX (91>98)	+			05/91 ▸ 07/98	6441G6	**698195**
C1	+			06/05 ▸	6441V0	**715221**
C1	-			06/05 ▸	6441V1	**715068**
C1	+			06/05 ▸	6441V2	**715069**
C1	-			06/05 ▸	6450SN	**715067**
C2	-			09/03 ▸	6441Q5	**698675**
C2	+			09/03 ▸	6441Q6	**698676**
C3	-			04/02 ▸	6441Q5	**698675**
C3	+			04/02 ▸	6441Q6	**698676**
C4	+/-			09/10 ▸	6441CZ	**715223**
C5 (2001>2004)	A+			02/01 ▸ 08/04	6441N7	**698539**
C5 (2001>2004)	M+			02/01 ▸ 08/04	6441N6	**698538**
DS4	+/-			04/11 ▸	6441CZ	**715223**
Saxo ▸8269	+			03/96 ▸ 06/99	6441G6	**698195**
Saxo 8270 ▸	+			05/99 ▸	6441K8	**698529**
Xantia (93>2002)	-			03/93 ▸ 12/97	95667961	**698042**
Xantia (93>2002) ▸6367	+		343 W	03/93 ▸ 12/97	6441E9	**698041**
Xantia (93>2002) 6368 ▸	+/-		302 W	12/97 ▸ 05/02	6441K6	**698325**
Xantia (93>2002)	-			03/93 ▸ 05/02	95667962	**698040**
Xantia (93>2002)	+		Type Valeo	03/93 ▸ 05/02	6447K7	**698575**
XM (89>2001)	+/-			05/89 ▸ 07/01	6441F3	**698038**
Xsara (97>2000) ▸7966	+/-			07/97 ▸ 09/98	6441J4	**698328**
Xsara (97>2000) 7967 ▸	+/-			09/98 ▸ 08/00	6441N3	**698326**
Xsara (97>2000)	A+			07/97 ▸ 08/00	6441N4	**698327**

• **New** Nouveau **Neu** Nuevo **Novo** Nuovo **Nieuw** Nowi **Новый** Novy **Nou** Yeni **Νέους**

	A/C				OE	Valeo
CITROËN (.../...)						
Xsara (2000>)	A+			09/00 ▸	6441N3	**698326**
Xsara (2000>)	A+			09/00 ▸ 08/05	6441N4	**698327**
ZX	-		Type Valeo	03/91 ▸ 07/98	644195	**698046**
ZX	-			03/91 ▸ 07/98	644196	**698044**
ZX	+			03/91 ▸ 07/98	6441L3	**698045**
ZX	+			03/91 ▸ 07/98	6441N4	**698327**
CITROËN						
Berlingo (96>2002)	-			07/96 ▸ 12/02	644195	**698046**
Berlingo (96>2002)	-			07/96 ▸ 12/02	644196	**698044**
Berlingo (96>2002)	+			07/96 ▸ 12/02	6441L3	**698045**
Berlingo (96>2002)	+			07/96 ▸ 12/02	6441N4	**698327**
Berlingo (2002>)	-			12/02 ▸	6441R5	**715227**
Berlingo (2002>)	+			12/02 ▸	6441S0	**715053**
Berlingo (2002>) ▸ 10555	+			12/02 ▸ 10/05	6441N4	**698327**
Dispatch (2004>)	-			01/04 ▸	6441R5	**715227**
Dispatch (2004>)	+			01/04 ▸	6441S0	**715053**
Dispatch (2004>)	+			01/04 ▸	6441N4	**698327**
DACIA						
Duster (2010>)	+			03/10 ▸	6001547487	**715058**
Duster (2010>)	-			03/10 ▸	6001547691	**715057**
Logan	-			09/04 ▸	6001547691	**715057**
Logan	+			09/04 ▸	6001547487	**715058**
Sandero	+			06/08 ▸	6001547487	**715058**
Sandero	-			06/08 ▸	6001547691	**715057**
DAF						
2800				▸ 12/83	107685	**883614**
45				07/92 ▸	1605822	**698853**
FIAT						
Punto (93>99)	-		Type Valeo	07/93 ▸ 09/99	5893938	**698294**
Punto II (99>2003)	-		Type Valeo	07/99 ▸ 06/03	71735480	**698533**
Punto II (99>2003)	+		Type Valeo	07/99 ▸ 06/03	46722956	**698534**
Punto II (2003>)	-		Type Valeo	07/03 ▸	71735480	**698533**
FIAT						
Doblo	+			10/00 ▸ 12/03	46722956	**698534**

• **New** Nouveau **Neu** Nuevo **Novo** Nuovo **Nieuw** Nowi **Новый** Novy **Nou** Yeni **Νέους**

	A/C				OE	Valeo
FIAT (.../...)						
Doblo	-			01/04 ▸	71735480	**698533**
FORD						
Fiesta (89>95)	-			07/89 ▸ 07/95	6202618	**715014**
Fiesta (95>2002)	+/-			08/95 ▸ 03/02	1055261	**715027**
Focus (98>2004)	+			10/98 ▸ 10/04	1062247	**715016**
Focus (98>2004)	+/-			10/98 ▸ 10/04	1092817	**715017**
Focus II (2007>)	M+			12/07 ▸	1362640	**715245**
Focus C-Max (2003>)	M+			06/03 ▸	1362640	**715245**
Focus Coupe Cabriolet (2006>)	M+			07/06 ▸	1362640	**715245**
Galaxy (95>2006)	+/-			05/95 ▸ 04/06	1038587	**715239**
Galaxy (95>2006)	+/-		Rear AC /(+) additional fan	03/96 ▸ 04/06	1011633	**715028**
Galaxy (2006>)	M+			04/06 ▸	1362640	**715245**
Granada (85>91)	-			05/85 ▸ 07/87	6157285	**715018**
Ka	-			09/96 ▸	1055261	**715027**
Ka	+			06/97 ▸ 12/00	1037313	**715009**
Ka	+			06/97 ▸ 10/02	1085616	**715010**
Kuga	M+			04/08 ▸	1362640	**715245**
Mondeo III (2007>)	M+			06/07 ▸	1362640	**715245**
Puma	+/-			05/97 ▸ 12/01	1055261	**715027**
Scorpio (85>92)	-			03/85 ▸ 07/89	6157285	**715018**
Scorpio (94>98)	M+			10/94 ▸	7013671	**715022**
Scorpio (94>98)	A+			10/94 ▸	7013670	**715021**
Sierra (82>86)	-			08/82 ▸ 01/87	6157285	**715018**
Sierra (87>93)	-			03/86 ▸ 01/90	6157285	**715018**
S-Max	M+			04/06 ▸	1362640	**715245**
FORD						
Courrier (91>96)	-			08/91 ▸ 09/96	6202618	**715014**
Transit (95>99)	+/-			09/94 ▸ 12/99	7188531	**715023**
Transit (2000>)	-			01/00 ▸	7188531	**715023**
HYUNDAI						
Accent (2003>2004)	+/-			02/03 ▸ 12/05	971121C000	**•715261**
Accent (2005>)	+			12/05 ▸	971131E000	**•715262**
Getz (2006>)	+/-			11/06 ▸ 07/10	971121C000	**•715261**
Getz (TB) (India) (2007>)	M+/-			01/07 ▸ 12/08	971121C000	**•715261**
i30	+/-			03/07 ▸	971132L000	**•715260**

• **New** Nouveau **Neu** Nuevo **Novo** Nuovo **Nieuw** Nowi **Новый** Nový **Nou** Yeni **Νέους**

	A/C			OE	Valeo
IVECO-IRISBUS					
My Way				98470504	**698438**
IVECO TRUCKS					
Eurocargo			06/91 ▸	42537386	**698437**
Eurocargo			06/91 ▸	98418120	**698511**
Eurocargo			06/91 ▸	98419164	**698437**
Eurostar			09/92 ▸ 04/95	42537387	**698438**
Eurostar			01/93 ▸ 02/02	42537387	**698438**
Eurostar			05/95 ▸	42537387	**698438**
Eurotech			09/92 ▸	98419164	**698437**
Eurotech			09/92 ▸	98470504	**698438**
Eurotech	+/-		09/92 ▸	98419164	**698437**
Eurotech Cursor			10/98 ▸	98470504	**698438**
Eurotech Cursor			10/99 ▸	98470504	**698438**
Eurotrakker			09/92 ▸	98419164	**698437**
Eurotrakker			05/95 ▸	98470504	**698438**
Eurotrakker	+/-		05/95 ▸	98419164	**698437**
SPR1				98418120	**698511**
Trakker AD			09/04 ▸	98470504	**698438**
Trakker AD	+/-		09/04 ▸	98419164	**698437**
Trakker AT			09/04 ▸	98470504	**698438**
Trakker AT	+/-		09/04 ▸	98419164	**698437**
JEEP					
Cherokee (77>2001)	+		01/93 ▸	4864956	**698452**
KIA					
Picanto (2006>2007)	+/-		09/06 ▸ 10/07	9711307900	•**715264**
Picanto (2006>2007)	+/-		09/06 ▸ 10/07	9711307000	•**715263**
Picanto (2007>)	+/-		12/07 ▸ 04/11	9711307000	•**715263**
Picanto (2007>)	+/-		12/07 ▸ 04/11	9711307900	•**715264**
LAND ROVER					
Freelander (97>2003)	+/-		10/97 ▸ 09/03	JGC500030	**715230**
New Freelander	+/-		09/03 ▸	JGC500030	**715230**
Range Rover			09/94 ▸ 02/02	JNB000060	**715007**
MERCEDES					
A Class (168) (97>2003)	+		10/97 ▸ 07/04	1688200542	**698841**

• **New** Nouveau **Neu** Nuevo **Novo** Nuovo **Nieuw** Nowi **Новый** Nowy **Nou** Yeni **Νέους**

	A/C				OE	Valeo
MERCEDES (.../...)						
A Class (169) (2004>)	+/-			07/04 ▸	1698200642	**715052**
A Class (169) (2004>)	A+			07/04 ▸	1698201342	**715051**
B Class (2005>)	+/-			05/05 ▸	1698200642	**715052**
B Class (2005>)	A+			05/05 ▸	1698201342	**715051**
C Class (202) F331441 ▸	+/-			06/97 ▸ 03/00	2028209242	**698244**
E Class (210)	-		Type Valeo	04/95 ▸ 06/99	2108200042	**698385**
E Class (210)	-		260 W	04/95 ▸ 03/03	2108203842	**715032**
E Class (210)	A+		320 W	04/95 ▸ 03/03	2108206842	**715033**
E Class (210)	+/-		260 W	04/95 ▸ 03/03	2108202442	**715031**
SLK (R170)	+/-			08/96 ▸ 12/03	2028209242	**698244**
SLK (R171)	+			01/04 ▸	1718350004	**715247**
V Class (638/2)	+/-			10/96 ▸ 12/02	0028301508	**698217**
V Class (638/2)	+			10/96 ▸ 12/02	0028301608	**698218**
MERCEDES						
Sprinter (95>)	-			02/95 ▸	0018305608	**698381**
Sprinter (95>)	-			02/95 ▸	0018305808	**698383**
Sprinter (95>)	+			02/95 ▸	0018305708	**698382**
Sprinter (95>)	+			02/95 ▸	0018305908	**698384**
Vito (96>2003)	+/-			01/96 ▸ 09/03	0028301508	**698217**
Vito (96>2003)	+			01/96 ▸ 09/03	0028301608	**698218**
MINI						
MINI (R56) (2006>)	M+			11/06 ▸	64113422646	**715072**
MINI (R56) (2006>)	M+			11/06 ▸	64113422647	**715073**
MINI (R56) (2006>)	A+			11/06 ▸	64113422644	**715074**
MINI (R56) (2006>)	A+			11/06 ▸	64113422645	**715075**
NISSAN						
Micra (K12) (2003>)	-			01/03 ▸	27226AX105	**698755**
Micra (K12) (2003>)	+			01/03 ▸ 10/03	27226AX100	**698754**
Micra (K12) (2003>)	+			10/03 ▸	27226AX105	**698755**
Note	+/-			09/05 ▸	27226AX105	**698755**
NISSAN						
Primastar (2002>)	-			09/02 ▸	7701208225	**715060**
Primastar (2002>)	+			09/02 ▸	7701050310	**715059**

• **New** Nouveau **Neu** Nuevo **Novo** Nuovo **Nieuw** Nowi **Новый** Novy **Nou** Yeni **Νέους**

	A/C				OE	Valeo
OPEL						
Astra F (91>98)	+/-			09/91 ▸ 09/98	1845057	**715036**
Astra G (98>2004)	+/-			09/98 ▸ 02/04	1845057	**715036**
Calibra	+			09/89 ▸ 07/97	1845021	**715036**
Corsa B	+			03/93 ▸ 08/00	1618105	**715034**
Corsa C	-			09/00 ▸ 06/06	1845222	**698563**
Corsa C	+			09/00 ▸ 06/06	1845202	**698564**
Corsa C	-			09/00 ▸	1845223	**715224**
Corsa C (2003>)	+			09/03 ▸ 07/06	1845205	**715226**
Signum	+/-			06/03 ▸	1845080	**698804**
Signum	+/-			06/03 ▸	1845079	**698803**
Signum B (2005>)	A+			10/05 ▸	1845110	**698806**
Tigra (94>2003)	+			10/94 ▸ 01/01	1618105	**715034**
Tigra TwinTop (2004>)	-			07/04 ▸	1845222	**698563**
Tigra TwinTop (2004>)	+			07/04 ▸	1845202	**698564**
Tigra TwinTop (2004>)	-			07/04 ▸	1845223	**715224**
Tigra TwinTop (2004>)	+			07/04 ▸	1845205	**715226**
Vectra A (88>95)	+			09/88 ▸ 09/95	1845035	**715036**
Vectra B (95>2002)	-			10/95 ▸ 01/99	1845046	**698393**
Vectra B (95>2002)	+			10/95 ▸ 06/03	1845055	**698402**
Vectra C (2002>)	-			10/03 ▸	1845079	**698803**
Vectra C (2002>)	A+			04/02 ▸	1845110	**698806**
Vectra C (2002>)	A+			04/02 ▸	1845109	**698805**
Vectra C (2002>)	+/-			04/02 ▸	1845080	**698804**
Vectra C (2002>)	M+			04/02 ▸	1845079	**698803**
OPEL						
Combo	+/-			01/06 ▸	1845205	**715226**
Vivaro	-			05/01 ▸	4409447	**715060**
Vivaro	+			05/01 ▸	4409448	**715059**
PEUGEOT						
106 (91>96)	+		Type Valeo	09/91 ▸ 03/96	6441G6	**698195**
106 (96>2003)	+		Type Valeo	03/96 ▸ 07/03	6441G6	**698195**
106 (96>2003)	+		Type Valeo	07/99 ▸ 07/03	6441K8	**698529**
107	+			06/05 ▸	6441V0	**715221**
107	+			06/05 ▸	6441V2	**715069**
107	-			06/05 ▸	6450SN	**715067**
107	-			06/05 ▸	6441V1	**715068**
1007	-			04/05 ▸	6441Q5	**698675**

• **New** Nouveau **Neu** Nuevo **Novo** Nuovo **Nieuw** Nowi **Новый** Novy **Nou** Yeni **Νέους**

	A/C				OE	Valeo
PEUGEOT (.../...)						
1007	+			04/05 ▸	6441Q6	**698676**
205	+/-			02/83 ▸ 06/88	644168	**883966**
205	+/-			07/88 ▸ 09/98	644169	**883978**
205	+/-			02/83 ▸ 09/98	644159	**883995**
207	+/-			03/06 ▸	6441V5	**715063**
306	-		Type Valeo	02/93 ▸ 09/02	644195	**698046**
306	-		Type Valeo	02/93 ▸ 09/02	644196	**698044**
308 ▸ 12046	A+			09/07 ▸ 09/09	6441Z7	**715222**
308 12047 ▸	A+			10/09 ▸	6441CZ	**715223**
308	-			09/07 ▸	6441Z7	**715222**
308	M+			09/07 ▸	6441Z7	**715222**
309 (85>89)	+/-			08/85 ▸ 07/89	644168	**883966**
309 (89>94)	+/-			07/89 ▸ 08/94	644169	**883978**
309 (89>94)	+/-			08/89 ▸ 08/94	644159	**883995**
405	-			06/87 ▸ 10/96	6441G3	**698193**
405	-			06/87 ▸ 10/96	644193	**698192**
405	+			06/87 ▸ 10/96	6441G5	**698194**
405	+			06/87 ▸ 10/96	6441G6	**698195**
406 (95>99)	-			10/95 ▸ 12/99	6441G3	**698193**
406 (95>99)	-			10/95 ▸ 12/99	6441G4	**698192**
406 (95>99)	+			10/95 ▸ 12/99	6441G5	**698194**
406 (95>99)	+/-			10/95 ▸ 12/99	6441G6	**698195**
406 (99>2004)	-			04/99 ▸ 04/04	6441G3	**698193**
406 (99>2004)	-			04/99 ▸ 04/04	6441G4	**698192**
406 (99>2004)	+			04/99 ▸ 04/04	6441K9	**698447**
406 (99>2004)	+			04/99 ▸ 04/04	6441L0	**698448**
505	+/-			05/79 ▸ 01/90	644145	**883629**
605	+/-			10/89 ▸ 05/99	6441F3	**698038**
607	A+			05/00 ▸	6441K9	**698447**
607	A+			05/00 ▸	6441L0	**698448**
RCZ				05/10 ▸	6441CZ	**715223**
PEUGEOT						
Partner (96>2002) ▸ 8991	-			06/96 ▸ 11/02	644195	**698046**
Partner (96>2002)	+			06/96 ▸ 11/02	6441L3	**698045**
Partner (96>2002) ▸ 9123	-			06/96 ▸ 11/02	644196	**698044**

• **New** Nouveau **Neu** Nuevo **Novo** Nuovo **Nieuw** Nowi **Новый** Novy **Nou** Yeni **Νέους**

	A/C				OE	Valeo
PEUGEOT (.../...)						
Partner (96>2002) 09124 ▸	-			10/01 ▸ 11/02	6441R5	**715227**
Partner (96>2002)	+			06/96 ▸ 11/02	6441N4	**698327**
Partner (2002>)	+			11/02 ▸	6441S0	**715053**
Partner (2002>) ▸ 10555	+			11/02 ▸	6441N4	**698327**
Partner (2002>)	-			11/02 ▸	6441R5	**715227**
Ranch (96>2002)	-			06/96 ▸ 11/02	644195	**698046**
Ranch (96>2002)	+			06/96 ▸ 11/02	6441L3	**698045**
Ranch (2002>)	+			11/02 ▸	6441S0	**715053**
PORSCHE						
911 (997)	+/-			07/04 ▸	1K1819015	**698809**
911 (997)	+/-			07/04 ▸	1K2819015	**698810**
Boxter II	+/-			11/04 ▸	1K1819015	**698809**
Boxter II	+/-			11/04 ▸	1K2819015	**698810**
Cayman	+/-			11/05 ▸	1K1819015	**698809**
Cayman	+/-			11/05 ▸	1K2819015	**698810**
RENAULT						
Super 5	+/-		HP	06/84 ▸ 12/96	7701027051	**698052**
R9	+/-		HP	10/81 ▸ 12/88	7701027051	**698052**
R11	-		HP	07/82 ▸ 07/89	7701027051	**698052**
R19	-			07/88 ▸ 11/95	7701040540	**698144**
R19	+			07/88 ▸ 11/95	7701033536	**698144**
R21	-			03/86 ▸ 08/95	7701349807	**883973**
R21	+			03/86 ▸ 08/95	7701034990	**698057**
Clio (90>98)	-			06/90 ▸ 02/98	7701040540	**698144**
Clio II (98>2001)	-			03/98 ▸ 03/01	7701044804	**698253**
Clio II (98>2001)	+			03/98 ▸ 03/01	7701206105	**698328**
Clio II (2001>)	M+			04/01 ▸ 05/01	7701050894	**715232**
Clio II (2001>)	M+			06/01 ▸	7701051270	**715233**
Clio II (2001>)	-			04/01 ▸	7701050899	**715231**
Clio II (2001>)	A+			04/01 ▸	7701051271	**715229**
Clio III (2005>)	M+			09/05 ▸	7701062226	**715056**
Laguna II (2001>)	A+			01/01 ▸	7701048753	**715243**
Lutecia (Jap)	-			10/94 ▸ 02/98	7701040540	**698144**
Mégane	-		Type Valeo/ Blower with plastic case	11/95 ▸ 04/98	7701040540	**698144**
Mégane	+			11/95 ▸ 04/98	7701205443	**698281**

• **New** Nouveau **Neu** Nuevo **Novo** Nuovo **Nieuw** Nowi **Новый** Novy **Nou** Yeni **Νέους**

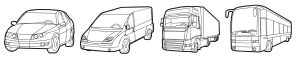

	A/C				OE	Valeo
RENAULT (.../...)						
Mégane ▸ 980403	+			04/98 ▸ 08/02	7701046058	**698277**
Mégane II	-		200 W	09/02 ▸	7701056964	**698728**
Mégane II ▸ 021130	+		250 W	12/02 ▸	7701056965	**698729**
Mégane III	+/-			10/08 ▸	272108241R	**715065**
Mégane Scénic (96>99)	-			10/96 ▸ 09/99	7701205479	**698330**
Mégane Scénic (96>99)	-			10/96 ▸ 09/99	7701205682	**698283**
Mégane Scénic (96>99) ▸ 980320	+			10/96 ▸ 02/98	7701205443	**698281**
Mégane Scénic (96>99) ▸ 980320	+			03/98 ▸ 09/99	7701206250	**698364**
Mégane Scénic (96>99)	+			09/98 ▸ 09/99	7701206251	**698329**
Mégane Scénic (99>2003)	-			09/99 ▸ 04/03	7701206252	**698330**
Mégane Scénic (99>2003)	-			09/99 ▸ 04/03	7701205682	**698283**
Mégane Scénic (99>2003)	A+			09/99 ▸ 04/03	7701048387	**698513**
Mégane Scénic (99>2003)	+			09/99 ▸ 04/03	7701206251	**698329**
Modus (2004>2007)	-			09/04 ▸ 12/07	7701060014	**715071**
Modus (2004>2007)	M+			09/04 ▸ 12/07	7701060014	**715071**
Modus (2004>2007)	A+			09/04 ▸ 12/07	7701060015	**715071**
Safrane	-		Type Valeo	09/96 ▸ 11/00	7701035892	**698059**
Scénic II	+/-			05/03 ▸	7701056598	**698816**
Thalia (2008>)	+			10/08 ▸	7701051271	**715229**
Twingo (2007>)	-			07/07 ▸	7701067950	**715066**
Twingo (2007>)	+			07/07 ▸	7701067982	**715057**
Vel Satis (2002>)	A+			01/02 ▸ 01/05	7701048753	**715243**
Wind				07/10 ▸	7701067982	**715057**
RENAULT						
Kangoo (97>2003) ▸ 991105 ▸ 001127	+			11/99 ▸ 10/00	7701206105	**698328**
Kangoo (97>2003) ▸ 001128	+			11/00 ▸ 12/03	7701050894	**715232**
Master (97>2003) ▸ 991022	+			09/97 ▸ 09/03	7701035892	**698059**
Trafic (2001>2006)	-			04/01 ▸ 07/06	7701208225	**715060**
Trafic (2001>2006)	+			04/01 ▸ 07/06	7701050310	**715059**
Trafic II (2006>)	-			07/06 ▸	7701208225	**715060**
Trafic II (2006>)	+			07/06 ▸	7701050310	**715059**
RENAULT TRUCKS						
GC					5001833357	**698853**

• **New** Nouveau **Neu** Nuevo **Novo** Nuovo **Nieuw** Nowi **Новый** Novy **Nou** Yeni **Νέους**

	A/C				OE	Valeo
RENAULT TRUCKS (.../...)						
GF					5001833357	**698853**
K					5001833357	**698853**
Kerax				12/98 ▸	5001833357	**698853**
Kerax	+/-		TROPIC	12/98 ▸	5001833357	**698853**
Midlum				02/00 ▸	5001833357	**698853**
Premium	+/-			06/96 ▸	5001833357	**698853**
Premium	+/-		TROPIC	06/96 ▸	5001833357	**698853**
SAAB						
900 (93>)	+/-			07/93 ▸ 02/98	4758819	**715036**
9-3 (2002>)	A+			09/02 ▸	9228317	**698806**
9-3 (2002>)	A+			09/02 ▸	9180222	**698805**
9-3 (2002>)	M+			09/02 ▸	12799558	**698807**
9-3 (2002>)	+			09/02 ▸	12799559	**698808**
9-5 (2001>)	+			09/01 ▸	5049085	**715061**
SEAT						
Alhambra	-			03/96 ▸ 05/00	7M1819015	**715239**
Alhambra	+/-		Rear AC /(+) additional fan	06/00 ▸	7M0819021B	**715028**
Altea	+/-			03/04 ▸	1K1819015	**698809**
Altea	+/-			03/04 ▸	1K2819015	**698810**
Altea	A+			03/04 ▸	1K1820015F	**698811**
Altea	A+			03/04 ▸	1K2820015A	**698812**
Arosa 6H-1-000 001 ▸	-			09/00 ▸	1J1819021C	**698262**
Arosa	-			07/00 ▸	1J2819021C	**698263**
Arosa	+			02/97 ▸	1H1820021	**698080**
Cordoba (93>99)	+			11/93 ▸ 05/99	1H1820021	**698080**
Cordoba (99>2002)	+/-			03/99 ▸ 08/02	1J1819021C	**698262**
Cordoba (99>2002)	+/-			03/99 ▸ 08/02	1J2819021C	**698263**
Cordoba (2002>)	+			09/02 ▸	6Q1820015H	**715240**
Exeo	+			04/09 ▸	8E2820021E	**698814**
Exeo	+/-			12/08 ▸	8E1820021E	**698813**
Ibiza (93>99)	+			02/93 ▸ 01/99	1H1820021	**698080**
Ibiza (99>2001)	+/-			03/99 ▸ 11/01	1J1819021C	**698262**
Ibiza (99>2001)	+/-			03/99 ▸ 11/01	1J2819021B	**698263**
Ibiza (2001>)	+			09/01 ▸	6Q1820015H	**715240**
Ibiza (2008>)	+			03/08 ▸	6Q1820015H	**715240**
Leon	+/-			08/99 ▸	1J1819021C	**698262**

• **New** Nouveau **Neu** Nuevo **Novo** Nuovo **Nieuw** Nowi **Новый** Novy **Nou** Yeni **Νέους**

	A/C				OE	Valeo
SEAT (.../...)						
Leon	+/-			08/99 ▸	1J2819021C	**698263**
Leon II	-			07/05 ▸	1K1819015	**698809**
Leon II	-			07/05 ▸	1K2819015	**698810**
Leon II	A+			07/05 ▸	1K1820015A	**698811**
Leon II	A+			07/05 ▸	3C2820015F	**698812**
Toledo (91>98)	+			02/91 ▸ 10/98	357820021	**698157**
Toledo (98>2004)	+/-			10/98 ▸ 07/04	1J1819021C	**698262**
Toledo (98>2004)	+/-			10/98 ▸ 07/04	1J2819021C	**698263**
Toledo (2004>)	+/-			09/04 ▸	1K1819015	**698809**
Toledo (2004>)	+/-			09/04 ▸	1K2819015	**698810**
Toledo (2004>)	A+			09/04 ▸	1K1820015F	**698811**
Toledo (2004>)	A+			09/04 ▸	1K2820015A	**698812**
SEAT						
Inca	+			11/95 ▸ 06/03	1H1820021	**698080**
SKODA						
Fabia (99>2004)	+			08/99 ▸	6Q1820015G	**715240**
Fabia (FL) (2004>2007)	+			09/00 ▸	6Q1820015H	**715240**
Fabia II (2007>)	+			12/06 ▸	6Q1820015H	**715240**
Octavia (96>2004) ▸ 1U-2-624898	+/-			10/96 ▸ 08/02	1J1819021C	**698262**
Octavia (96>2004)	+/-			10/96 ▸	1J2819021C	**698263**
Octavia (2004>)	+/-			05/04 ▸	1K1819015	**698809**
Octavia (2004>)	+/-			05/04 ▸	1K2819015	**698810**
Octavia (2004>)	A+			05/04 ▸	1K1820015A	**698811**
Octavia (2004>)	A+			05/04 ▸	1K2820015	**698812**
Roomster	+			03/06 ▸	6Q1820015H	**715240**
Superb	+			03/08 ▸	1K1819015	**698809**
Yeti	-			05/09 ▸	1K1819015	**698809**
Yeti	+/-			05/09 ▸	1K2819015	**698810**
TOYOTA						
Aygo	-			02/05 ▸	871030H040	**715067**
Aygo	+			02/05 ▸	871030H030	**715069**
Aygo	-			02/05 ▸	871030H020	**715068**
Aygo	+			02/05 ▸	871030H010	**715221**
VAUXHALL						
Astra III (91>98)	+/-			09/91 ▸ 03/98	90589511	**715036**

• **New** Nouveau **Neu** Nuevo **Novo** Nuovo **Nieuw** Nowi **Новый** Novy **Nou** Yeni **Νέους**

	A/C				OE	Valeo
VAUXHALL (.../...)						
Astra IV (98>)	+/-			04/98 ▸	90589511	**715036**
Calibra R100001 ▸	+			1993 ▸ 07/97	90589511	**715036**
Corsa II (2000>2003)	-			09/00 ▸ 08/03	24436990	**715224**
Corsa II (2003>)	+			09/03 ▸	90535115	**715226**
Signum (2003>2005)	+/-			06/03 ▸ 09/05	13221350	**698803**
Signum (2003>2005)	A+			06/03 ▸ 09/05	13221348	**698805**
Tigra Twintop (2004>2008)	+			07/04 ▸	90535115	**715226**
Vectra (95>2002) X1125796 ▸	-			01/99 ▸ 03/02	9118918	**698393**
Vectra (95>2002)	+			10/95 ▸ 03/02	90568692	**698402**
Vectra (2002>)	M+			04/02 ▸	9180016	**698804**
Vectra (2002>)	A+			04/02 ▸	13221349	**698806**
Vectra (2002>)	+/-			04/02 ▸	9180015	**698803**
Vectra (2002>)	A+			04/02 ▸	9180222	**698805**
VAUXHALL						
Combo (2001>2004)	+/-			10/01 ▸ 07/04	90535115	**715226**
Combo (2004>)	+/-			07/04 ▸	90535115	**715226**
Vivaro	-			05/01 ▸	93161216	**715060**
Vivaro	+			05/01 ▸	91158687	**715059**
VOLKSWAGEN						
Bora	+/-			09/98 ▸	1J1819021C	**698262**
Bora	+/-			09/98 ▸	1J2819021C	**698263**
Corrado	+			09/88 ▸ 07/95	357820021	**698157**
Eos (2006>2010)	+/-			05/06 ▸ 11/10	1K1819015	**698809**
Eos (2006>2010)	A+			05/06 ▸ 11/10	1K1820015	**698811**
Eos (2006>2010)	+/-			05/06 ▸ 11/10	1K2819015	**698810**
Eos (2010>)	A+			11/10 ▸	3C2820015F	**698812**
Eos (2010>)	M+			11/10 ▸	1K1819015	**698809**
Eos (2010>)	M+			11/10 ▸	1K2819015	**698810**
Fox	+			11/04 ▸	6Q1820015H	**715240**
Golf I (74>83)	+			08/79 ▸ 12/84	171820021D	**715040**
Golf I Cabriolet (79>93)	+			01/79 ▸ 07/93	171820021D	**715040**
Golf II (83>91)	+			08/83 ▸ 07/88	357820021	**698157**
Golf II Cabriolet (93>98)	+			09/93 ▸ 02/98	1H1820021	**698080**
Golf III (91>97)	+/-			05/94 ▸ 12/97	1J1819021B	**698262**
Golf III (91>97)	+/-			10/94 ▸ 04/99	1H1820021	**698080**

• **New** Nouveau **Neu** Nuevo **Novo** Nuovo **Nieuw** Nowi **Новый** Novy **Nou** Yeni **Νέους**

VOLKSWAGEN (.../...)

	A/C		OE	Valeo
Golf III Cabriolet (98>2002)	+	03/98 ▸ 06/02	1H1820021	**698080**
Golf IV (97>2003)	+/-	10/97 ▸ 10/03	1J1819021C	**698262**
Golf IV (97>2003)	+/-	10/97 ▸ 10/03	1J2819021C	**698263**
Golf V (2003>2008)	+/-	10/03 ▸ 09/08	1K1819015	**698809**
Golf V (2003>2008)	+/-	10/03 ▸ 09/08	1K2819015	**698810**
Golf V (2003>2008)	A+	10/03 ▸ 09/08	1K1820015	**698811**
Golf V (2003>2008)	A+	10/03 ▸ 09/08	1K2820015	**698812**
Golf VI (2008>)	+/-	10/08 ▸	1K1819015	**698809**
Golf VI (2008>)	+/-	10/08 ▸	1K2819015	**698810**
Golf Plus (2005>)	+/-	01/05 ▸	1K1819015	**698809**
Golf Plus (2005>)	+/-	01/05 ▸	1K2819015	**698810**
Golf Plus (2005>)	A+	01/05 ▸	1K1820015	**698811**
Golf Plus (2005>)	A+	01/05 ▸	3C2820015F	**698812**
Golf VI Plus (2009>)	+/-	01/09 ▸	1K1819015	**698809**
Golf VI Plus (2009>)	+/-	01/09 ▸	1K2819015	**698810**
Jetta I (78>83)	+	08/78 ▸ 07/84	171820021D	**715040**
Jetta (2000>2003)	+/-	02/01 ▸	1J1819021C	**698262**
Jetta (2000>2003)	+/-	02/01 ▸	1J2819021C	**698263**
Jetta (2005>)	+/-	08/05 ▸	1K1819015	**698809**
Jetta (2005>)	+/-	08/05 ▸	1K2819015	**698810**
Jetta (2005>)	A+	08/05 ▸	1K1820015	**698811**
Lupo	+/-	10/98 ▸	1J1819021C	**698262**
Lupo	+/-	10/98 ▸	1J2819021C	**698263**
New Beetle	+/-	01/98 ▸	1J1819021C	**698262**
New Beetle	+/-	01/98 ▸	1J2819021C	**698263**
New Beetle (2011>)	+/-	07/11 ▸	1K2819015C	**698810**
Passat (88>93) 31-ME-360001 ▸	+	04/88 ▸ 10/93	357820021	**698157**
Passat (93>97)	+	10/93 ▸ 05/97	357820021	**698157**
Passat (96>2004)	+	10/96 ▸ 05/05	8D2820021	**698216**
Passat (2005>)	+/-	03/05 ▸	1K1819015	**698809**
Passat (2005>)	+	05/07 ▸	1K1820015D	**698811**
Polo (94>99)	+	10/94 ▸ 12/99	1H1820021	**698080**
Polo (99>2001)	+/-	10/99 ▸ 10/01	1J1819021C	**698262**
Polo (99>2001)	+/-	10/99 ▸ 10/01	1J2819021C	**698263**
Polo (2001>)	+	11/01 ▸ 05/05	6Q1820015H	**715240**
Polo (2005>)	+	05/05 ▸	6Q1820015H	**715240**
Scirocco (1974>1990)	+	08/77 ▸ 07/83	171820021D	**715040**
Scirocco (2008>)	+	08/08 ▸	1K1819015	**698809**
Scirocco (2008>)	+	08/08 ▸	1K2819015	**698810**

• **New** Nouveau **Neu** Nuevo **Novo** Nuovo **Nieuw** Nowi **Новый** Novy **Nou** Yeni **Νέους**

	A/C				OE	Valeo
VOLKSWAGEN (.../...)						
Scirocco (2008>)	A+			08/08 ▸	3C2820015F	**698812**
Sharan ▸ 7H-V-029180	+/-			09/95 ▸	7M1819021D	**715239**
Sharan	+		Rear AC /(+) additional fan	09/95 ▸	7M0819021B	**715028**
Tiguan	+/-			11/07 ▸	1K1819015	**698809**
Tiguan	+/-			11/07 ▸	1K2819015	**698810**
Touran	+/-			02/03 ▸	1K1819015	**698809**
Touran	+/-			02/03 ▸	1K2819015	**698810**
Touran	A+			02/03 ▸	1K1820015	**698811**
Touran	A+			02/03 ▸	1K2820015	**698812**
Vento	+/-			11/91 ▸ 12/97	1H1820021	**698080**
VOLKSWAGEN						
Caddy (95>2004)	+		Type Valeo	11/95 ▸ 06/03	1H1820021	**698080**
Caddy (2004>)	+/-			02/04 ▸	1K1819015	**698809**
Caddy (2004>)	+/-			02/04 ▸	1K2819015	**698810**
LT II (96>2003)	-			05/96 ▸ 05/03	2D1959101B	**715246**
LT III (2003>)	-			06/03 ▸ 07/06	2D1959101B	**715246**
Transporter (F70) (90>96)	+		Type Valeo	09/90 ▸ 12/95	357820021	**698157**
Transporter (F7D) (96>2003)	+		Type Valeo	01/96 ▸ 06/03	357820021	**698157**
VOLVO						
C30	-			10/06 ▸	1362640	**715245**
C30	M+			10/06 ▸	1362640	**715245**
C30	A+			10/06 ▸	1362640	**715245**
S40	-			03/04 ▸	1362640	**715245**
S40	M+			03/04 ▸	1362640	**715245**
V50	-			03/04 ▸	1362640	**715245**
V50	M+			03/04 ▸	1362640	**715245**

• **New** Nouveau **Neu** Nuevo **Novo** Nuovo **Nieuw** Nowi **Новый** Novy **Nou** Yeni **Νέους**

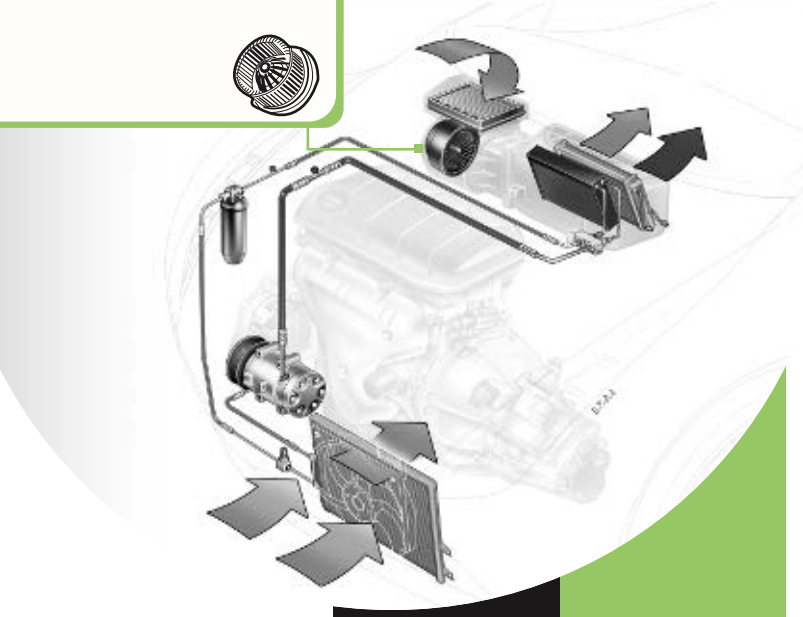

BLOWER MOTOR

PULSEUR

INNENRAUM-GEBLÄSEMOTOREN

GMV CLIMATIZACION

GMV CLIMATIZAÇÃO

GMV ABITACOLO

KACHELVENTILATOR

DMUCHAWA

МОТОР ВЕНТИЛЯТОРА

MOTOR VENTIL TORU

VENTILATOR DE HABITACLU

KALORIFER MOTORU

Ανεμιστήρας

TECH.COD. Valeo

CT	Valeo	i
VALEO		
007016M	**698805**	
007017J	**698805**	
007188H	**698806**	
007189T	**698805**	
007190H	**698804**	
007191C	**698803**	
007192R	**698807**	
007193P	**698808**	
020887G	**715227**	
030669L	**715227**	
030840SR	**715053**	
030957X0	**715071**	
030958D0	**715071**	
033741A0	**698262**	
033813RR	**698563**	
033814LR	**698564**	
034731H0	**715071**	
035545D	**698533**	
035550J	**698534**	
133059ZA	**698294**	
650440D0	**698045**	
652212M	**698325**	
652213J	**698575**	
652578W	**698038**	
652602D	**698038**	
652627J0	**698217**	
652628T0	**698218**	
655183B	**698244**	
656915V	**698244**	
657879D0	**698262**	
657880E	**698263**	
665663JD	**698329**	
829909A0	**698030**	
983226W	**698809**	
983227A	**698810**	
985467WV	**715049**	
990402WV	**715072**	
990403AV	**715073**	
990404MV	**715074**	

CT	Valeo	i
VALEO (.../...)		
990405JV	**715075**	
995748QE	**698811**	
995749UE	**698812**	
F109393B	**698052**	
F253562V	**883973**	
F602905K	**698046**	
F602906P	**698044**	
F650932Q	**698072**	
F651055P	**698193**	
F651056B	**698192**	
F652142D	**698041**	
F654576K	**698144**	
F657322C	**698281**	
F657759B	**698283**	
F658082F	**698194**	
F658083S	**698529**	
F658084N	**698195**	
F658267S	**698326**	
F658268N	**698327**	
F658269W	**698325**	
F658617U	**698277**	
F659014B	**698253**	
F659875B	**698038**	
F659963H	**698447**	
F659964U	**698448**	
F661075W	**698364**	
F661076V	**698330**	
F661308X	**698328**	
F661492X	**698329**	
F664528X	**698538**	
F664529T	**698539**	
F664691L	**698216**	
F664692J	**698513**	
F665724X	**698813**	
F665726H	**698814**	
F665876T	**698675**	
F665878C	**698676**	
F667217D	**698755**	
F828370U	**883966**	

CT	Valeo	i
VALEO (.../...)		
F838774V	**698059**	
F841888K	**698042**	
F847004F	**698057**	
F883995T	**883995**	
F964173T	**715059**	
M030909V	**698728**	
M030911X	**698729**	
N100043F	**698754**	
N100135F	**698830**	
N100881R	**698816**	
N101091K	**715060**	
N103992Q	**715056**	
W964451CV	**715061**	

Valeo 509271

Picture not available
Image non disponible
Nicht verfügbares Bild
Imagen no disponible
Immagine non disponibile
Zdjęcie niedostępne

IVECO TRUCKS	035714B

Valeo 698038

F659875B

CITROËN	6441F3
PEUGEOT	6441F3

Valeo 698040

CITROËN	95667962

Valeo 698041

F652142D

CITROËN	6441E9

Valeo 698042

F841888K

CITROËN	95667961

Valeo 698044

F602906P

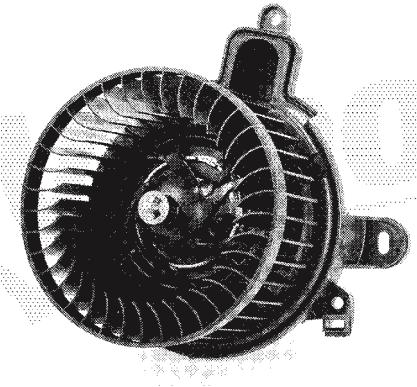

CITROËN	644196
PEUGEOT	644196

Valeo 698045

650440D0

CITROËN	6441L3
PEUGEOT	6441L3

Valeo 698046

F602905K

CITROËN	644195
PEUGEOT	644195

Valeo 698052

F109393B

RENAULT	7701027051

Valeo 698057

F847004F

RENAULT	7701034990

Valeo 698059

F838774V

RENAULT	7701035892

Valeo 698080

SEAT	1H1820021
VOLKSWAGEN	1H1820021

Valeo 698144

F654576K

RENAULT	7701033536
RENAULT	7701040540

Valeo 698193

F651055P

PEUGEOT	6441G3

Valeo 698157

AUDI	357820021
SEAT	357820021
VOLKSWAGEN	357820021

Valeo 698194

F658082F

PEUGEOT	6441G5

Valeo 698192

F651056B

PEUGEOT	644193
PEUGEOT	6441G4

Valeo 698195

F658084N

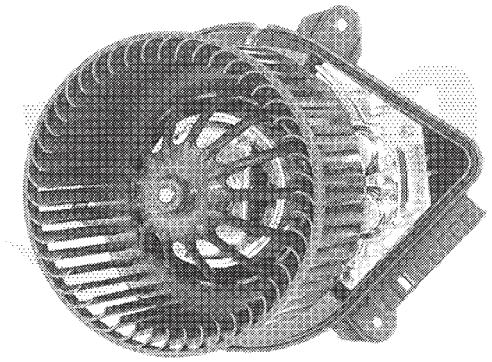

CITROËN	6441G6
PEUGEOT	6441G6

Valeo 698215

AUDI	8A1820021

Valeo 698216

AUDI	8A2820021
VOLKSWAGEN	8D2820021

Valeo 698217

652627J

MERCEDES	0028301508

Valeo 698218

652628T

MERCEDES	0028301608

Valeo 698244

MERCEDES	2028209242

Valeo 698253

F659014B

RENAULT	7701044804

Valeo 698262

657879D0

AUDI	1J1819021C
SEAT	1J1819021A/B/C
SKODA	1J1819021C
VOLKSWAGEN	1J1819021B/C

Valeo 698263

Picture not available
Image non disponible
Nicht verfügbares Bild
Imagen no disponible
Immagine non disponibile
Zdjęcie niedostępne

AUDI	1J2819021C
SEAT	1J2819021B/C
SKODA	1J2819021C
VOLKSWAGEN	1J2819021C

Valeo 698277

F658617U

RENAULT	7701046058

Valeo 698281

F657322C

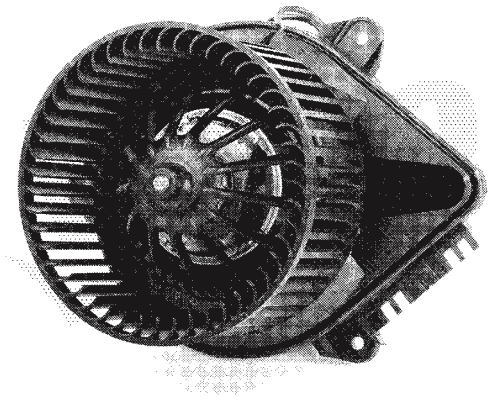

RENAULT	7701205443

Valeo 698283

F657759B

Picture not available
Image non disponible
Nicht verfügbares Bild
Imagen no disponible
Immagine non disponibile
Zdjęcie niedostępne

RENAULT	7701205682

Valeo 698294

133059ZA

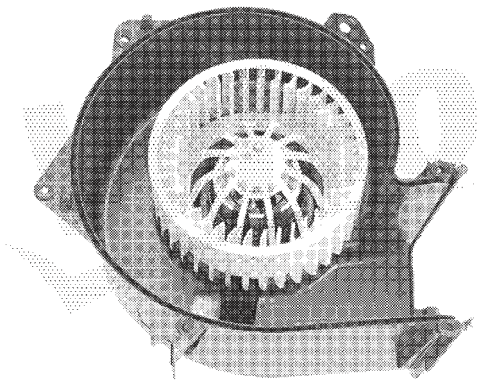

FIAT	5893938

Valeo 698325

F658269W

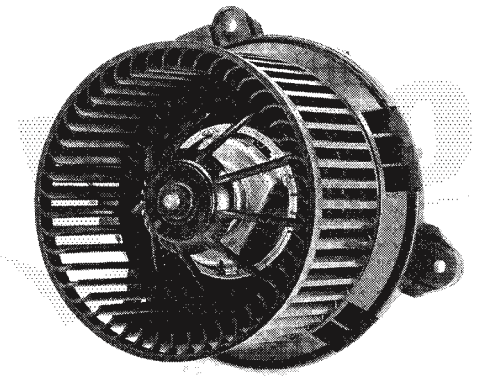

CITROËN 6441K6

Valeo 698326

F658267S

CITROËN 6441N3

Valeo 698327

F658268N

CITROËN 6441J5

Valeo 698328

F661308X

CITROËN 6441J4
RENAULT 7701206105

Valeo 698329

F661492X

RENAULT 7701206251

Valeo 698330

F661076V

RENAULT 7701205479
RENAULT 7701206252

Valeo 698364

RENAULT 7701206250

Valeo 698383

MERCEDES 0018305808

Valeo 698381

MERCEDES 0018305608

Valeo 698384

MERCEDES 0018305908

Valeo 698382

MERCEDES 0018305708

Valeo 698385

MERCEDES 2108200042

Valeo 698393

OPEL	1845046
VAUXHALL	9118918

Valeo 698438

Picture not available
Image non disponible
Nicht verfügbares Bild
Imagen no disponible
Immagine non disponibile
Zdjęcie niedostępne

IVECO-IRISBUS	98470504
IVECO TRUCKS	42537387

Valeo 698402

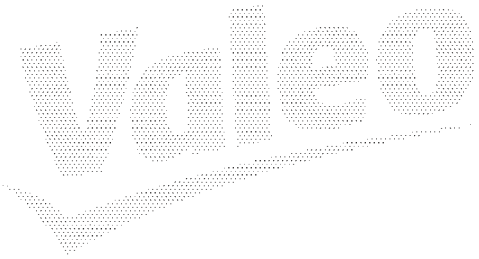

OPEL	1845055

Valeo 698447

F659963H

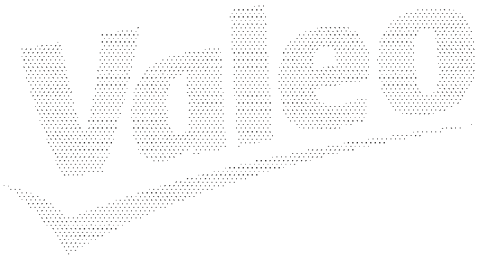

PEUGEOT	6441K9

Valeo 698437

Picture not available
Image non disponible
Nicht verfügbares Bild
Imagen no disponible
Immagine non disponibile
Zdjęcie niedostępne

IVECO TRUCKS	42537386
IVECO TRUCKS	98419164

Valeo 698448

F659964U

PEUGEOT	6441L0

Valeo 698452

JEEP 4864956

Valeo 698529

F658083S

CITROËN 6441K8

Valeo 698511

Picture not available
Image non disponible
Nicht verfügbares Bild
Imagen no disponible
Immagine non disponibile
Zdjęcie niedostępne

IVECO TRUCKS 98418120

Valeo 698533

035545D

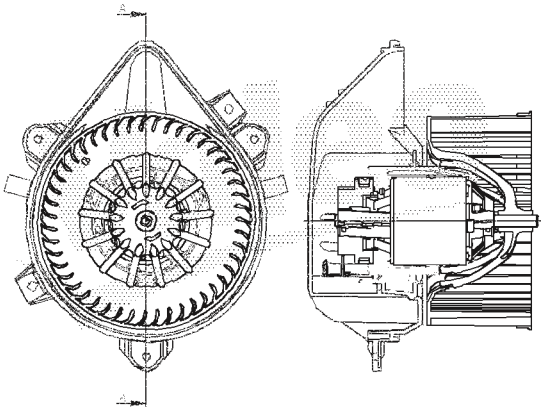

FIAT 46722948

Valeo 698513

F664692J

RENAULT 7701048387

Valeo 698534

035550J

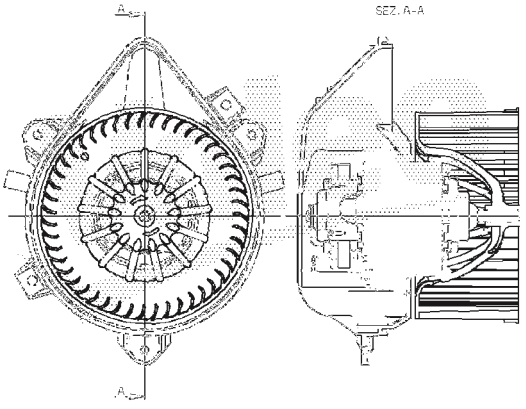

FIAT 46722956

Valeo 698538

F664528X

CITROËN 6441N6

Valeo 698539

F664529T

CITROËN 6441N7

Valeo 698563

033813RR

OPEL 1845222

Valeo 698564

033814LR

OPEL 1845202

Valeo 698575

CITROËN 6447K7

Valeo 698675

F665876T

CITROËN 6441Q5

698676

F665878C

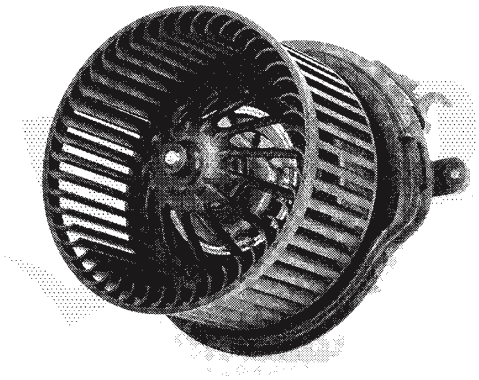

CITROËN 6441Q6

698728

M030909V

RENAULT 7701056964

698729

M030911X

RENAULT 7701056965

698754

N100043F

NISSAN 27226AX100

698755

F667217D

NISSAN 27226AX105

698803

007191C

OPEL 1845079
VAUXHALL 9180015

Valeo 698804

007190H

OPEL	1845080

Valeo 698805

007189T

CADILLAC	
OPEL	1845088
SAAB	9180222
VAUXHALL	9180222

Valeo 698806

007188H

OPEL	1845089
SAAB	9228317

Valeo 698807

007192R

SAAB	12799558

Valeo 698808

007193P

Picture not available
Image non disponible
Nicht verfügbares Bild
Imagen no disponible
Immagine non disponibile
Zdjęcie niedostępne

SAAB	12799559

Valeo 698809

983226W

AUDI	1K1819015
PORSCHE	1K1819015
SEAT	1K1819015
SKODA	1K1819015
VOLKSWAGEN	1K1819015

Valeo 698810

983227A

AUDI	1K2819015
PORSCHE	1K2819015
SEAT	1K2819015
SKODA	1K2819015
VOLKSWAGEN	1K2819015

Valeo 698811

AUDI	1K1820015A
SEAT	1K1820015A
SKODA	1K1820015A
VOLKSWAGEN	1K1820015

Valeo 698812

Picture not available
Image non disponible
Nicht verfügbares Bild
Imagen no disponible
Immagine non disponibile
Zdjęcie niedostępne

AUDI	1K2820015
SEAT	1K2820015A
SKODA	1K2820015
VOLKSWAGEN	1K2820015

Valeo 698813

F665724X

AUDI	8E1820021E

Valeo 698814

F665726H

AUDI	8E2820021E

Valeo 698816

N100881R

RENAULT	7701056598

Valeo 698841

MERCEDES	1688200542

Valeo 698853

DAF	1605822
RENAULT TRUCKS	5001833357

Valeo 715007

BMW	64118385558
LAND ROVER	JNB000060

Valeo 715009

FORD	1037313

Valeo 715010

FORD	1085616

Valeo 715014

FORD	6202618

Valeo 715016

FORD 1062247

Valeo 715017

FORD 1092817

Valeo 715018

FORD 6157285

Valeo 715021

FORD 7013670

Valeo 715022

FORD 7013671

Valeo 715023

FORD 7188531

Valeo 715027

FORD	1055261

Valeo 715028

FORD	1011633
SEAT	7M0819021B

Valeo 715239

FORD	1038587
SEAT	7M1819015
VOLKSWAGEN	7M1819021D

Valeo 715031

MERCEDES	2108202442

Valeo 715032

MERCEDES	2108203842

Valeo 715033

MERCEDES	2108206842

Valeo 715034

OPEL	1618105

Valeo 715036

OPEL	1845057
VAUXHALL	90589511

Valeo 715040

VOLKSWAGEN	171820021D

Valeo 715048

BMW	64116933663

Valeo 715049

BMW	64116933664

Valeo 715051

MERCEDES	1698201342

Valeo 715052

Picture not available
Image non disponible
Nicht verfügbares Bild
Imagen no disponible
Immagine non disponibile
Zdjęcie niedostępne

MERCEDES	1698200642

Valeo 715053

030840SR

CITROËN	6441S0
PEUGEOT	6441S0

Valeo 715056

RENAULT	7701062226

Valeo 715057

DACIA	6001547691
RENAULT	7701067982

Valeo 715058

Picture not available
Image non disponible
Nicht verfügbares Bild
Imagen no disponible
Immagine non disponibile
Zdjęcie niedostępne

DACIA	6001547487

Valeo 715059

NISSAN	
OPEL	91158687
RENAULT	7701050310
VAUXHALL	91158687

Valeo 715060

NISSAN	
OPEL	93161216
RENAULT	7701208225
VAUXHALL	93161216

Valeo 715061

W964451CV

SAAB	5049085

Valeo 715063

Picture not available
Image non disponible
Nicht verfügbares Bild
Imagen no disponible
Immagine non disponibile
Zdjęcie niedostępne

PEUGEOT	6441V5

Valeo 715065

RENAULT	272108241R

Valeo 715066

RENAULT	7701067950

Valeo 715067

CITROËN	6450SN
PEUGEOT	6450SN
TOYOTA	871030H040

Valeo 715068

CITROËN	6441V1
PEUGEOT	6441V1
TOYOTA	871030H020

Valeo 715069

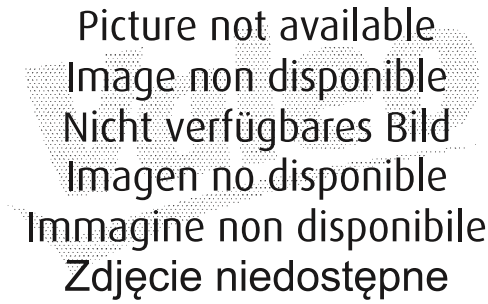

CITROËN	6441V2
PEUGEOT	6441V2
TOYOTA	871030H030

Valeo 715071

RENAULT	7701060014
RENAULT	7701060015

Valeo 715072

MINI	64113422646

Valeo 715073

MINI	64113422647

Valeo 715074

MINI	64113422644

Valeo 715075

MINI 64113422645

Valeo 715223

CITROËN 6441CZ
PEUGEOT 6441CZ

Valeo 715221

CITROËN 6441V0
PEUGEOT 6441V0
TOYOTA 871030H010

Valeo 715224

OPEL 1845223
VAUXHALL 24436990

Valeo 715222

PEUGEOT 6441Z7

Valeo 715226

Picture not available
Image non disponible
Nicht verfügbares Bild
Imagen no disponible
Immagine non disponibile
Zdjęcie niedostępne

VAUXHALL 90535115

Valeo 715227

Picture not available
Image non disponible
Nicht verfügbares Bild
Imagen no disponible
Immagine non disponibile
Zdjęcie niedostępne

PEUGEOT	6441R5
PEUGEOT	6441R5

Valeo 715229

RENAULT	7701051271

Valeo 715230

Picture not available
Image non disponible
Nicht verfügbares Bild
Imagen no disponible
Immagine non disponibile
Zdjęcie niedostępne

LAND ROVER	JGC500030

Valeo 715231

RENAULT	7701050899

Valeo 715232

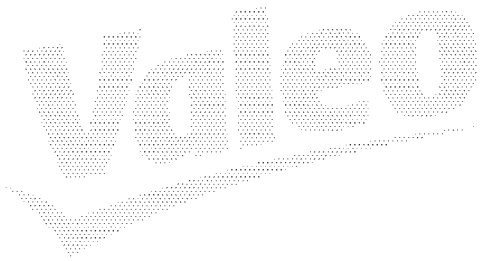

RENAULT	7701050894

Valeo 715233

Picture not available
Image non disponible
Nicht verfügbares Bild
Imagen no disponible
Immagine non disponibile
Zdjęcie niedostępne

RENAULT	7701051270

Valeo 715239

FORD	1038587
SEAT	7M1819015
VOLKSWAGEN	7M1819021D

Valeo 715240

AUDI	6Q1820015H
SEAT	6Q1820015H
SKODA	6Q1820015G
SKODA	6Q1820015H
VOLKSWAGEN	6Q1820015H

Valeo 715243

RENAULT	7701048753

Valeo 715245

FORD	1362640
VOLVO	1362640

Valeo 715246

VOLKSWAGEN	2D1959101B

Valeo 715247

Picture not available
Image non disponible
Nicht verfügbares Bild
Imagen no disponible
Immagine non disponibile
Zdjęcie niedostępne

MERCEDES	1718350004

Valeo 715248

ALFA ROMEO 77365569

Valeo 715249

Picture not available
Image non disponible
Nicht verfügbares Bild
Imagen no disponible
Immagine non disponibile
Zdjęcie niedostępne

ALFA ROMEO 77365861

Valeo 715260

HYUNDAI 971132L000

Valeo 715261

HYUNDAI 971121C000

Valeo 715262

HYUNDAI 971131E000

Valeo 715263

KIA 9711307000

Valeo 715264

KIA 9711307900

Valeo 883966

F828370U

PEUGEOT 644168

Valeo 883614

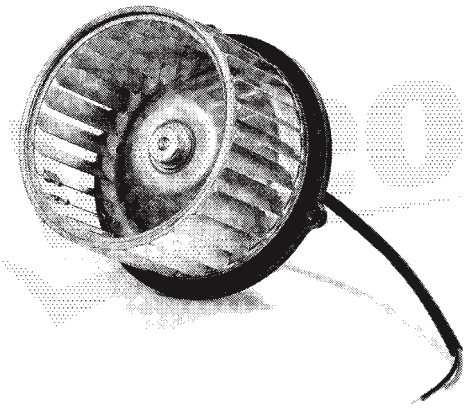

DAF 107685

Valeo 883973

F253562V

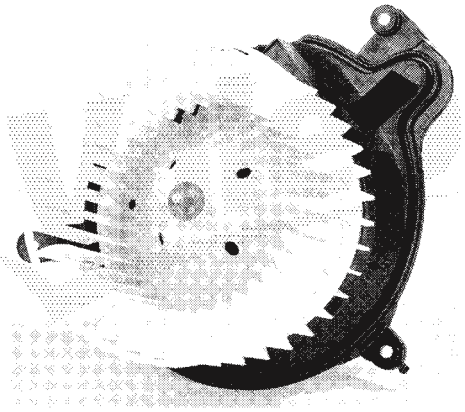

RENAULT 7701349807

Valeo 883629

Picture not available
Image non disponible
Nicht verfügbares Bild
Imagen no disponible
Immagine non disponibile
Zdjęcie niedostępne

PEUGEOT 644145

Valeo 883978

PEUGEOT 644169

Valeo 883995

F883995T

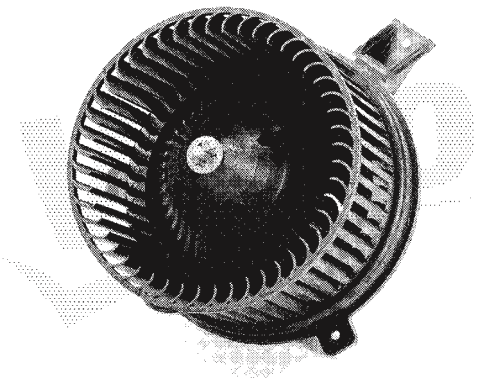

PEUGEOT 644159

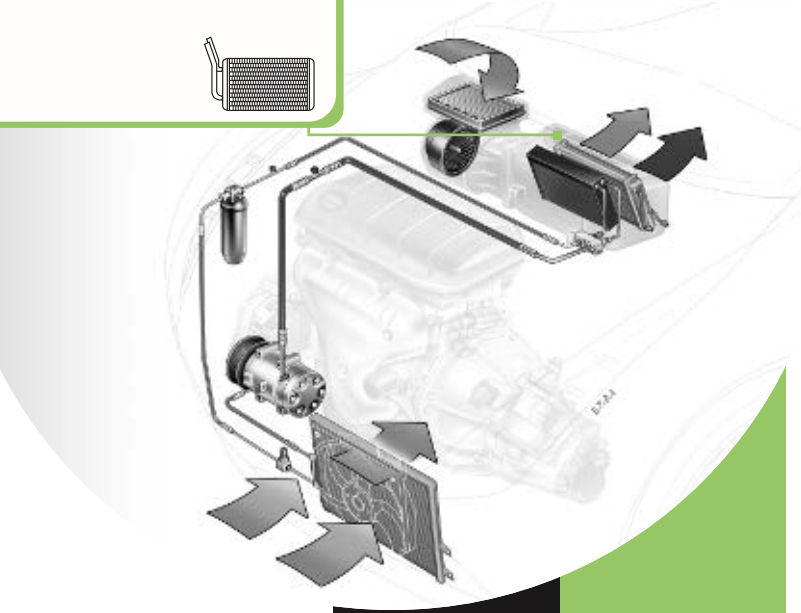

HEATER CORE
RADIATEUR DE CHAUFFAGE
HEIZUNGSKÜHLER
RADIADOR DE CALEFACCION
RADIADOR DE CHAUFFAGE
RADIATORE DI RISCALDAMENTO
KACHELRADIATEUR
NAGRZEWNICA
Радиатор Отопителя
VýMĚNŽK TEPLA
RADIATOR DE ÎNCALZIRE HABITACLU
K LORIFER R DY TÖRÜ
Ψυγείο Καλοριφέρ

4.7

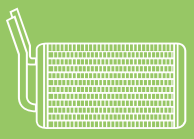

EN

Function
The heater core is a heat exchanger which heats the air blown in the cabin. The heat is exchanged from the hot engine coolant to the air blown by the blower, via the metal fins of the exchanger. It is located in the HVAC module, under the dashboard.

Replacement
The heater core must be replaced after a breakdown or leak.
Typical problems with Heater Core :
- Perforation due to the presence of corrosion on the surface of the heater core
- Leaks at the inlet and outlet fittings
- Low heat performance due to changing of the specific heater core with an adaptable

Repair recommendations
- Choose OE quality parts. Check the fins and quality of the inlet/outlet fittings.

- The heater core is a safety component: the driver/passenger could be burnt by leaked hot coolant.

- Use new seals and o'rings when replacing components

FR

Fonction
Le radiateur de chauffage est un échangeur thermique qui réchauffe l'air pulsé dans l'habitacle. La chaleur passe du liquide de refroidissement à l'air pulsé dans l'habitacle, via les les ailettes métalliques de l'échangeur. Il est situé dans le module de climatisation, sous le tableau de bord.

Remplacement
Le radiateur de chauffage doit être remplacé en cas de panne ou de fuite.
Les problèmes les plus typiques sont :
- Perforation aux raccords d'entrée ou de sortie
- Fuites aux entrées ou sorties de raccords
- Faible performance thermique suite au remplacement d'un radiateur de chauffage spécifique par un adaptable

Recommandations Valeo pour la Réparation
- Choisir le bon radiateur de chauffage: correspondant à l'application véhicule et conforme à l'origine. Vérifier les entrées et sorties de raccords, la qualité, la présence d'un traitement de surface.

- Le radiateur de chauffage est un produit de sécurité: en cas de fuite, le conducteur ou les passagers peuvent être brûlés par du liquide chaud !

- Remplacer les joints à chaque changement de composants.

DE

Funktion
Der Heizungskühler ist ein Wärmetauscher, der die Luft, die in den Fahrgastraum geblasen wird, wärmt. Dazu wird die Hitze des heißen Motorkühlmittels an die Luft übertragen, und zwar mittels eines Gebläses, das die Luft durch die Metalllamellen des Wärmetauschers führt. Der Heizungskühler befindet sich im HVAC-Modul, unter der Instrumententafel.

Austausch
Der Heizungskühler muss nach einer Kollision ausgewechselt werden.
Häufige Probleme mit dem Heizungskühler:
- Undichte Stellen infolge von Korrosion an der Heizungskühleroberfläche
- Lecks an den Anschlüssen
- Unzureichende Wärmeleistung, nachdem der Heizungskühler durch ein Originalteil ersetzt wurde

Reparaturempfehlungen
- Wählen Sie ein Produkt mit Originalteilequalität und prüfen Sie die Lamellen, die Qualität der Anschlüsse sowie das Vorhandensein einer Oberflächenbehandlung. Der Heizungskühler ist ein sicherheitsrelevantes Bauteil: Im Fall von Lecks besteht die Gefahr, dass sich Fahrer und Fahrgäste mit heißem Kühlmittel verbrühen!

- Verwenden Sie beim Auswechseln von Bauteilen immer neue Dichtungen und O-Ringe

SP

Función
El radiador de calefacción es un intercambiador de calor que calienta el aire pulsado en el habitáculo. El calor es intercambiado entre el refrigerante del motor caliente y el aire impulsado a través de las aletas de metal del intercambiador. Se encuentra en el módulo de calefacción, ventilación y aire acondicionado, debajo del salpicadero.

Sustitución
El radiador de calefacción debe sustituirse en caso de averia.
Problemas típicos con el radiador de calefacción:
- Perforación debida a la presencia de corrosión en la superficie del radiador de calefacción.
- Fugas en los dispositivos de entrada y salida.
- Calor insuficiente debido a la sustitución del radiador de calefacción específico por uno adaptable.

Recomendaciones para la reparación
- Elegir la pieza de calidad original y verificar las aletas, la calidad de los dispositivos de entrada/salida y la presencia de un tratamiento de superficie. El radiador de calefacción es una pieza de seguridad pues, en caso de fuga, ¡el conductor y los pasajeros pueden resultar quemados por el refrigerante caliente!

- Utilizar juntas nuevas al reemplazar los componentes.

IT

Funzione
Il radiatore di riscaldamento è uno scambiatore di calore che riscalda l'aria introdotta nell'abitacolo. Il liquido di raffreddamento caldo, proveniente dal motore riscalda l'aria immessa dal GMV abitacolo, attraverso le alette metalliche dello scambiatore. Il radiatore è collocato nel modulo HVAC, sotto il cruscotto.

Sostituzione
Il radiatore di riscaldamento deve essere sostituito in caso di perdita/rottura.
Problemi più frequenti relativi al radiatore di riscaldamento:
- Perforazione dovuta a corrosione della superficie del radiatore di riscaldamento
- Perdite sui raccordi d'ingresso e di uscita
- Riscaldamento insufficiente a causa della sostituzione del radiatore di riscaldamento specifico con uno adattabile

Raccomandazioni Valeo per la riparazione
- Scegliere un ricambio di qualità OE e verificare le alette, la qualità dei raccordi di ingresso/uscita, la presenza di un trattamento di superficie. Il radiatore di riscaldamento è un componente di sicurezza: in caso di perdita, il conducente e i passeggeri possono essere ustionati dal liquido di raffreddamento caldo!

- Utilizzare nuove guarnizioni e nuovi o'ring quando ad ogni sostituzione di componenti

NL

Funktion
De kachelradiator is een warmtewisselaar die de lucht verwarmt die het interieur wordt ingeblazen. De warmte wordt van de hete koelvloeistof van de motor via de metalen koelribben van de warmtewisselaar overgebracht naar de lucht die door de kachelradiator wordt geblazen. De radiator bevindt zich in de HVAC module, onder het dashboard.

Vervanging
De kachelradiator moet worden vervangen na een aanrijding.
Problemen die het meest voorkomen bij kachelradiators:
- Perforatie veroorzaakt door corrosie op het oppervlak van de kachelradiator
- Lekken aan de inlaat- en uitlaatkoppelstukken
- Slechte werking van de verwarming doordat de specifieke kachelradiator is vervangen door een aanpasbaar model

Aanbevelingen bij de reparatie
- Kies een onderdeel van OE kwaliteit en controleer de goede staat van de koelribben en inlaat-/uitlaatkoppelstukken en de aanwezigheid van oppervlaktebehandeling. De kachelradiator is een component die belangrijk is voor de veiligheid: in geval van lekken kunnen de bestuurder en de passagier brandwonden oplopen door hete koelvloeistof!

- Gebruik nieuwe dichtingen en O-ringen wanneer u onderdelen vervangt

PL

Funkcja
Nagrzewnica jest wymiennikiem ciepła, który ogrzewa powietrze wdmuchiwane do kabiny. Ciepło jest przekazywane z gorącego płynu chłodzącego silnik do powietrza wdmuchiwanego przy pomocy dmuchawy przez metalowe finsy nagrzewnicy. Znajduje się ona w module układu klimatyzacji, pod deską rozdzielczą.

Wymiana
Nagrzewnica musi być wymieniona po uszkodzeniu w wyniku wypadku lub w przypadku wykrycia nieszczelności.
Typowe problemy z nagrzewnicami:
- Perforacja ze względu na obecność korozji na powierzchni rdzenia nagrzewnicy
- Wycieki na wlocie i wylocie nagrzewnicy
- Niska wydajność ciepła ze względu na zastąpienie nagrzewnicy nieodpowiednim zamiennikiem

Zalecenia naprawy
- Wybierz część jakości OE. Sprawdź jakość finsów i połączeń wlotowych / wylotowych
- Nagrzewnica jest elementem zagrażającym bezpieczeństwu: kierowca / pasażer może ulec poparzeniu przez gorący wyciekający płyn chłodniczy.
- Zastosuj nowe uszczelki i oringi przy wymianie elementów A/C

RU

Функция
Сердцевина обогревателя - это теплообменник, который нагревает воздух, подаваемый в салон автомобиля. Тепло передается от горячего двигателя воздуху, который нагнетается вентилятором через металлические ребра обменника. Сердцевина располагается в модуле ОВКВ под приборной панелью.

Замена
Сердцевину обогревателя следует заменить в случае поломки или утечки.

Типичные проблемы с сердцевиной обогревателя:
- Появление отверстий под действием коррозии на поверхности сердцевины обогревателя
- Утечки на входной и выходной арматуре
- Низкая теплоотдача из-за замены стандартной сердцевины нагревателя на адаптированную

Рекомендации по ремонту
- Покупать оригинальные качественные детали. Проверять ребра и качество входной и выходной арматуры.
- Сердцевина нагревателя является компонентом, который обеспечивает безопасность: водитель / пассажир могут получить ожоги в случае утечки горячего хладагента.
- Использовать новые прокладки и кольцевые уплотнения при замене компонентов

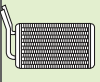

CZ

Funkce
Radiátor topení je výměník tepla, který ohřívá vzduch vanoucí do kabiny.
Teplo je odebíráno z horké chladicí kapaliny motoru a předáváno vzduchu proudícímu za pomoci ventilátoru přes kovová žebra výměníku. Ten je umístěn v modulu HVAC pod přístrojovou deskou.

V měna
Těleso topení musí být vyměněno v případě jeho poškození a úniku chladiva.
Typické problémy s topením:
- Proražení v důsledku koroze tělesa jednotky topení
- Úniky u vstupních a výstupních šroubení
- Nízká účinnost topení v důsledku výměny topného tělesa za jiný, nesprávný typ

Doporučení pro opravy
- Zvolte díly v kvalitě pro OE. Překontrolujte žebra výměníku a kvalitu šroubení na vstupu/výstupu.
- Jednotka topení je bezpečnostním komponentem: řidič/cestující ve vozidle by mohli být opařeni unikající horkou chladicí kapalinou.
- Použijte vždy nová těsnění a O-kroužky při výměně těchto komponentů.

HU

Szerepe
A fűtőradiátor az a hőcserélő, amely az utastérbe fújt levegőt fűti. A hőcsere a forró hűtőfolyadék és a ventilátor által befújt levegő között történik a radiátor finom lamelláin. A fűtőradiátor a HVAC-egységben, a műszerfal alatt található.

Cseréje
A fűtőradiátort szivárgás esetén ki kell kicserélni.
Gyakran el forduló meghibásodások:
- a radiátor kilyukad a felületén lévő korrózió hatására
- szivárgás a be- és kivezető csövek csatlakozásánál
- csökkentett teljesítmény, ha az eredeti alkatrészt utángyártottra cserélték

Javítási tanácsok
- Válasszon mindig OE alkatrészt. Ellenőrizze a lamellákat és a csatlakozások minőségét.
- A fűtőradiátor egyben biztonsági alkatrész is. A kilyukadt alkatrészből kifolyó hűtőfolyadék égési sérüléseket okozhat.
- Mindig használjon új tömítéseket és alátéteket.

RO

Funcţiune:
Radiatorul de încălzire este un schimbător de căldură care încălzeşte aerul ventilat în cabină.
Căldura trece de la lichidul de răcire a motorului la aerul ventilat prin paletele metalice ale ventilatorului.
Se află în modulul de climatizare, sub tabloul de bord.

Înlocuire:
Radiatorul de încălzire trebuie schimbat în caz de defect sau scurgere.
Probleme tipice cu radiatorul de încălzire
- Perforaţie datorită coroziunii de pe suprafaţa radiatorului de încălzire
- Scurgeri pe la racordurile de umplere şi evacuare.
- Performanţă termică scăzută datorită schimbării radiatorului de încălzire specific, cu unul adaptabil.

Recomandări de reparaţie:
Alegeţi piese de schimb de calitatea aparaturii originale. Verificaţi paletele şi calitatea racordurilor de umplere/evacuare.
- Radiatorul de încălzire reprezintă o componentă de securitate: în caz de scurgere şoferul/pasagerii pot fi arşi cu lichidul de răcire fierbinte
- Folosiţi racorduri şi inele de etanşare noi.

TU

İşlev:
Kalorifer radyatörü, kabine gönderilen havayı ısıtan bir ısı değiştiricisidir. Sözkonusu ısı değişimi kalorifer radyatörü içinde dolaşan sıcak motor soğutma sıvısı ile kalorifer radyatörünün yaprakları (fin) arasından geçen hava arasında gerçekleşir. Araçta ön göğüste, klima modülü içerisindedir.

Değişim:
Kalorifer radyatörü işlevini yitirince ya da akıntı yaptığı durumlarda değiştirilir.
Kalorifer radyatöründe en çok rastlanan sorunlar
- Parça üzerinde korozyon sebebiyle oluşabilecek delikler
- Giriş ve çıkış bağlantılarında olabilecek sızıntılar
- Özel bir kalorifer radyatörü yerine uydurulmuş olanının sebebiyet vereceği düşük ısı performansı

Onarım önerileri:
- Değişim için OE kaliteli bir ürün seçiniz. Finlerin ve giriş çıkış bağlantılarının durumunu kontrol ediniz.
- Kalorifer radyatörü bir güvenlik ürünüdür: Motor soğutma sıvısı sürücü ya da yolcu üzerinde yanıklara sebep olabilir.
- Değişim sırasında yeni yalıtkan ve contalar kullanılmalıdır.

GR

Λειτουργία :
Το ψυγείο καλοριφέρ είναι ο εναλλάκτης θερμότητας που θερμαίνει τον αέρα που εισέρχεται στην καμπίνα. Η θερμότητα ανταλλάσσεται από το θερμό ψυκτικό υγρό του κινητήρα προς τον αέρα που προέρχεται από τον ανεμιστήρα, μέσω των μεταλλικών πτερυγίων του. Είναι τοποθετημένος μέσα στο HVAC, πίσω από το ταμπλό.

Αντικατάσταση :
Το ψυγείο καλοριφέρ πρέπει να αντικατασταθεί σε περίπτωση βλάβης ή διαρροής.

Συνηθισμένα προβλήματα του ψυγείου καλοριφέρ:

- Διάτρηση λόγω διάβρωσης στην επιφάνεια του.
- Διαρροές στις συνδέσεις εισόδου και εξόδου.
- Χαμηλή θερμαντική απόδοση λόγω αντικατάστασης του ειδικού ψυγείου καλοριφέρ με ένα άλλο χαμηλότερης ποιότητας.

Συστάσεις απο την Valeo για την επισκευή :

- Επιλέξτε το σωστό ψυγείο καλοριφέρ, ανάλογα με το όχημα και τις προδιαγραφές του κατασκευαστή. Ελέγξτε τα πτερύγια, την ποιότητα των συνδέσεων εισόδου/εξόδου, την κατάσταση της επιφάνειας.

- Το ψυγείο καλοριφέρ είναι εξάρτημα ασφαλείας: σε περίπτωση διαρροής, ο οδηγός και οι επιβάτες μπορούν να καούν λόγω του θερμού ψυκτικού υγρού!

- Οταν αντικαθιστάτε οποιοδήποτε εξάρτημα του κυκλώματος, κατόπιν να χρησιμοποιείτε καινούργια στεγανοποιητικά λαστιχάκια και τσιμούχες.

	A/C					OE	Valeo	DIM.	TECH
ALFA ROMEO									
145	+/-			09/94 ▸ 06/01		60809015	**811075**	250 157	Al
145 3160209, 3158152 ▸	+/-			01/98 ▸ 06/01		60779470	**812176**	276 158	Al
146	+/-			12/94 ▸ 06/01		60809015	**811075**	250 157	Al
146 3160209, 3158152 ▸	+/-			06/98 ▸ 06/01		60779470	**812176**	276 158	Al
155	+/-			03/95 ▸ 08/97		60809015	**811075**	250 157	Al
164 (87>98)	+/-			07/87 ▸ 09/98		60805074	**811066**	280 156	Al
166	+/-			10/98 ▸		46721527	**812400**	280 160	Al
Giulietta	+		RESISTANCE	06/10 ▸		77365588	**812426**		
Spider (95>2003)	+/-			02/95 ▸ 02/03		60809015	**811075**	250 157	Al
AUDI									
50	-			08/74 ▸ 07/78		867819121A	**812029**	212 138	Al
80 (72>81)	+/-			03/73 ▸ 08/81		171819031E	**812034**	234 157	Al
80 (81>86)	+/-			08/81 ▸ 08/86		171819031E	**812034**	234 157	Al
80 (86>91)	+/-			08/86 ▸ 09/91		171819031E	**812034**	234 157	Al
80 (86>91)	+/-			08/86 ▸ 08/91		894819031A	**812012**	234 157	Cu
80 (91>95)	+/-			09/91 ▸ 07/95		894819031A	**812012**	234 157	Cu
90 (84>87)	+/-			06/84 ▸ 03/87		171819031E	**812034**	234 157	Al
90 (87>91)	A+			04/87 ▸ 09/91		894819031A	**812012**	234 157	Cu
A2	+/-			06/00 ▸		8Z0819030	**812319**	179 180	Al
A3 (96>2003) 8l-W1500 000 ▸	+/-			09/96 ▸ 07/98		1H1819031B	**812030**	234 157	Al
A3 (96>2003)	+/-			09/96 ▸ 07/98		1H2819031B	**812031**	234 157	Al
A3 (2003>)	+/-			05/03 ▸		1K0819031B	**812254**	235 190	Al
A4 (2000>2004)	+/-			12/00 ▸ 12/04		8E1820031	**812255**	285 150	Al
A4 (2000>2004)	+/-			12/00 ▸ 12/04		8E2820031	**812256**	285 150	Al
A4 (2004>)	+/-			11/04 ▸		8E1820031	**812255**	285 150	Al
A4 (2004>)	+/-			11/04 ▸		8E2820031	**812256**	285 150	Al
A4 Cabriolet (2002>)	+/-			04/02 ▸		8E1820031	**812255**	285 150	Al
A4 Cabriolet (2002>)	+/-			04/02 ▸		8E2820031	**812256**	285 150	Al
Cabriolet	+/-			07/94 ▸ 08/00		894819031A	**812012**	234 157	Cu
Coupé (80>88)	+/-			10/80 ▸ 07/88		171819031E	**812034**	234 157	Al
Coupé (88>96)	+/-			11/88 ▸ 01/96		894819031A	**812012**	234 157	Cu
Quattro	+/-			07/80 ▸ 07/91		171819031E	**812034**	234 157	Al
S3 (2006>)	+/-			10/06 ▸		1K0819031B	**812254**	235 190	Al
S4 (2003>)	+			03/03 ▸ 12/04		8E1820031	**812255**	285 150	Al
S4 (2003>)	+			03/03 ▸ 12/04		8E2820031	**812256**	285 150	Al
TT (2006>)	+/-			08/06 ▸		1K0819031B	**812254**	235 190	Al

• **New** Nouveau **Neu** Nuevo **Novo** Nuovo **Nieuw** Nowi **Новый** Novy **Nou** Yeni **Νέους**

Heater core
Radiateur de chauffage
Heizungskühler

Radiador de calefaccion
Radiador de aquecimento
Radiatore di riscaldamento

Kachelradiator
Nagrzewnica
РАДИАТОР ОТОПИТЕЛЯ

Výměník tepla
Radiator de încalzire habitaclu
Kalorifer radyatörü
Ψυγείο καλοριφέρ

Valeo

	A/C					OE	Valeo	DIM.	TECH
BMW									
1 series E81/E87	+/-		Type Valeo	09/04 ▸		64119128953	**812401**	256 210	Al
3 series E21	-			01/77 ▸ 01/81		64111373772	**812238**	264 132	Al
3 series E21	+/-			01/77 ▸ 01/81		64118391363	**812296**	224 152	Al
3 series E30	-			09/82 ▸ 09/93		64118391362	**812238**	264 132	Al
3 series E30	+/-			09/82 ▸ 09/93		64118391363	**812296**	224 152	Al
3 series E36	+			12/90 ▸ 02/00		64111393212	**812240**	190 155	Al
3 series E36 Compact	+			02/94 ▸ 04/01		64118373786	**812360**	205 145	Al
3 series E46	-			03/98 ▸		64118372771	**812318**	205 145	Al
3 series E46	+			03/98 ▸		64118372783	**812220**	206 135	Al
3 series E90/E91/E92	A+		Type Valeo	03/05 ▸		64119128953	**812401**	256 210	Al
5 series E34	-			11/87 ▸ 09/96		64111384725	**883982**	276 184	Al
5 series E34	+/-			11/87 ▸ 09/96		64118372523	**812294**	270 150	Al
5 series E34	M+		Type Behr	11/87 ▸ 09/96		64118351171	**812239**	190 155	Al
7 series E32	+/-			09/86 ▸ 05/94		64118372523	**812294**	270 150	Al
7 series E38	A+			06/94 ▸ 08/01		64118373175	**812362**	268 135	Al
7 series E65/E66	+			03/02 ▸ 02/05		64116906270	**812365**	261 180	Al
8 series E31	+			09/89 ▸ 06/00		64118372523	**812294**	270 150	Al
M3 E30	-			09/86 ▸ 06/91		64118391362	**812238**	264 132	Al
M3 E30	+/-			09/86 ▸ 06/91		64118391363	**812296**	224 152	Al
M3 E36	+			06/92 ▸ 06/00		64111393212	**812240**	190 155	Al
M3 E46	+			07/00 ▸		64118372783	**812220**	206 135	Al
M5 E34	-			07/88 ▸ 09/95		64111384725	**883982**	276 184	Al
M5 E34	+			07/88 ▸ 09/95		64118372523	**812294**	270 150	Al
M5 E34	+/-		Type Behr	03/92 ▸ 09/95		64118351171	**812239**	190 155	Al
X3 E83	+			10/03 ▸		64118372783	**812220**	206 135	Al
Z1 E30	+			03/89 ▸ 01/92		64118391362	**812238**	264 132	Al
CHRYSLER									
300M	+			01/98 ▸ 04/03		5011078AA	**812049**	234 181	Al
LHS	+/-			01/93 ▸		4644708	**812049**	234 181	Al
Vision	+/-			10/92 ▸		4644708	**812049**	234 181	Al
Voyager (96>2001)	+/-			01/96 ▸ 03/01		5003372AA	**812119**	282 182	Al
CITROËN									
AX (86>91)	+/-			09/86 ▸ 05/91		95230684	**812002**	236 138	Al
AX (91>98)	+/-			05/91 ▸ 07/98		96090004	**812016**	234 138	Al
BX	+/-			09/82 ▸ 12/94		95495316	**812036**	300 138	Al
C2	+/-			09/03 ▸		6448K9	**812234**	250 140	Al
C2	+/-			09/03 ▸		6445PT	**812235**	233 82	Al

• **New** Nouveau **Neu** Nuevo **Novo** Nuovo **Nieuw** Nowi **Новый** Novy **Nou** Yeni **Νέους**

	A/C					OE	Valeo	DIM.	TECH
CITROËN								(.../...)	
C3	+/-			04/02 ▸		6448K9	**812234**	250 140	Al
C3	+/-			04/02 ▸		6445PT	**812235**	233 82	Al
C5 (2001>2004)	+/-			02/01 ▸ 08/04		6448J8	**812215**	233 157	Al
CX	+/-			03/77 ▸ 01/91		75513460	**883520**	193 172	Al
Evasion	+/-			07/94 ▸ 05/02		6448A7	**812116**	299 170	Al
Saxo	+			03/96 ▸		644872	**812016**	234 138	Al
Synergie	+/-			10/95 ▸ 05/02		6448A7	**812116**	299 170	Al
Visa	+/-			10/78 ▸ 01/88		75515461	**883468**	200 175	Al
Xantia	+/-		Type Valeo	03/93 ▸ 05/02		644878	**812005**	234 157	Al
Xantia	+/-		Type Behr	03/93 ▸ 05/02		6448C8	**812044**	234 157	Al
Xantia	+/-		Type Valeo	03/93 ▸ 05/02		644880	**812006**	234 157	Al
XM	+/-			05/89 ▸ 07/01		644889	**812037**	290 157	Al
Xsara	+/-		Type Valeo	07/97 ▸		644878	**812005**	234 157	Al
Xsara	+/-		Type Behr	07/97 ▸		6448C8	**812044**	234 157	Al
Xsara	+/-		Type Valeo	07/97 ▸		644880	**812006**	234 157	Al
Xsara Picasso	+/-			12/99 ▸		6448G3	**812221**	247 134	Al
ZX	+/-		Type Valeo	03/91 ▸ 07/98		644878	**812005**	234 157	Al
ZX	+/-		Type Behr	03/91 ▸ 07/98		6448C8	**812044**	234 157	Al
ZX	+/-		Type Valeo	03/91 ▸ 07/98		644880	**812006**	234 157	Al
CITROËN									
Berlingo	+/-		Type Valeo	07/96 ▸		644878	**812005**	234 157	Al
Berlingo	+/-		Type Valeo	07/96 ▸		644880	**812006**	234 157	Al
C15	+/-			10/84 ▸		75515461	**883468**	200 175	Al
C25 (81>94)	+/-		Type Magneti Marelli	07/90 ▸ 02/94		644862	**812337**	243 177	Al
Dispatch	+/-			09/95 ▸		644880	**812006**	234 157	Al
Jumper (94>2001)	+/-			02/94 ▸ 12/01		6448F9	**812141**	220 185	Al
Jumper (94>2001)	+/-			06/99 ▸ 12/01		6448H8	**812358**	290 158	Al
Jumper (2002>)	+/-			01/02 ▸		6448H8	**812358**	290 158	Al
Jumpy	+/-			09/95 ▸ 12/03		6448A7	**812116**	299 170	Al
Jumpy II	+/-			01/04 ▸		6448A7	**812116**	299 170	Al
Relay	+/-			02/94 ▸ 12/01		6448F9	**812141**	220 185	Al
Relay	+/-			01/02 ▸		6448H8	**812358**	290 158	Al
DACIA									
Logan	+/-			09/04 ▸		6001547484	**812374**	170 158	Al
DAEWOO									
Kalos	+/-			09/02 ▸ 07/05		96539642	•**812442**	195 150	Al

• **New** Nouveau **Neu** Nuevo **Novo** Nuovo **Nieuw** Nowi **Новый** Novy **Nou** Yeni **Νέους**

	A/C					OE	Valeo	DIM.	TECH
DAEWOO (.../...)									
Lanos	+/-			09/97 ▸		96231949	**812335**	182 168	Al
Nubira	+/-			09/97 ▸		96231949	**812335**	182 168	Al
FIAT									
Barchetta (95>2003)	+/-		Type Valeo	05/95 ▸ 06/03		5893932	**812081**	200 175	Al
Barchetta (95>2003)	+/-		Type Magneti Marelli	05/95 ▸ 06/03		46722095	**812145**	195 166	Al
Barchetta (2003>)	+/-		Type Valeo	07/03 ▸		5893932	**812081**	200 175	Al
Brava	+/-		D	03/96 ▸		46722359	**812281**	250 140	Al
Bravo	+/-		D	03/96 ▸		46722359	**812281**	250 140	Al
Bravo II (2007>)	+/-			02/07 ▸		46723450	**812329**	220 156	Al
Cinquecento	+/-			01/92 ▸ 02/98		7685154	**812303**	230 140	Al
Croma (85>96)	+/-			10/85 ▸ 12/96		82420113	**811066**	280 156	Al
Idea	+/-		Type Magneti Marelli	10/03 ▸		46722928	**812280**	209 159	Al
Marea	+/-		D	07/96 ▸		46722359	**812281**	250 140	Al
Marea	+/-		Type Valeo	02/99 ▸		71714180	**812194**	260 154	Al
Marengo (159) (89>95)	-		2 connect.	11/89 ▸ 01/95		7754065	**812156**	250 157	Al
Marengo (159) (89>95)	A+		1 connect.	11/89 ▸ 01/95		7754068	**811075**	250 157	Al
Marengo (185) (95>)	+/-		D	01/95 ▸		46722359	**812281**	250 140	Al
Marengo (185) (95>)	+/-		Type Valeo	01/99 ▸		71714180	**812194**	260 154	Al
Multipla (98>2003)	+/-			11/98 ▸		71714180	**812194**	260 154	Al
Palio	+/-			09/97 ▸		7078698	**812283**	265 205	Cu
Panda	+/-			03/86 ▸ 02/91		7754062	**811065**	185 175	Al
Panda (2003>)	+/-			09/03 ▸		77362540	**812336**	180 159	Al
Punto (93>99)	+/-		Type Valeo	07/93 ▸ 09/99		5893932	**812081**	200 175	Al
Punto (93>99)	+/-		Type Magneti Marelli	07/93 ▸ 04/97		46722095	**812145**	195 166	Al
Punto II (99>2005)	+/-		Type Valeo	07/99 ▸ 04/05		46723042	**812211**	209 159	Al
Punto II (99>2005)	+/-		Type Magneti Marelli	07/99 ▸ 04/05		46722928	**812280**	209 159	Al
Siena	+/-			11/97 ▸		7078698	**812283**	265 205	Cu
Stilo (2001>)	+/-			09/01 ▸		46723450	**812329**	220 156	Al
Tempra	-		2 connect.	11/89 ▸ 01/96		7754065	**812156**	250 157	Al
Tempra	+/-		1 connect.	11/89 ▸ 01/96		7754068	**811075**	250 157	Al
Tipo	-		2 connect.	01/88 ▸ 10/95		7754065	**812156**	250 157	Al
Tipo	+/-		1 connect.	01/88 ▸ 10/95		7754068	**811075**	250 157	Al
Ulysse (94>2002)	+/-			06/94 ▸ 08/02		9566944680	**812116**	299 170	Al
Ulysse (2002>)	+/-			09/02 ▸		9464420380	**812395**	250 180	Al
Uno (83>95)	+/-			01/83 ▸ 08/95		7754055	**811397**	216 157	Al
Uno Mondo (98>)	+/-			01/98 ▸		7753630	**811397**	216 157	Al
FIAT									
Doblo (2000>2004)	+/-		Type Valeo	10/00 ▸ 12/03		46723042	**812211**	209 159	Al

• **New** Nouveau **Neu** Nuevo **Novo** Nuovo **Nieuw** Nowi **Новый** Novy **Nou** Yeni **Νέους**

	A/C					OE	Valeo	DIM.	TECH
FIAT (.../...)									
Doblo (2000>2004)	+/-		Type Magneti Marelli	10/00 ▸ 12/03		46722928	**812280**	209 159	Al
Doblo (2004>)	+/-		Type Magneti Marelli	01/04 ▸		46722928	**812280**	209 159	Al
Doblo Cargo (2004>)	+/-		Type Magneti Marelli	01/04 ▸		46722928	**812280**	209 159	Al
Ducato (81>94)	-		Type Magneti Marelli	09/90 ▸ 01/94		7661840	**812337**	243 177	Al
Ducato (94>99) ▸ 5741637	+/-			02/94 ▸ 06/99		1321309080	**812141**	220 185	Al
Ducato (99>)	+/-			06/99 ▸		46722710	**812358**	290 158	Al
Duna	+/-			03/87 ▸ 12/91		7754055	**811397**	216 157	Al
Fiorino (146) (88>)	+/-			03/88 ▸ 06/93		7754055	**811397**	216 157	Al
Scudo (95>2006)	+/-			07/95 ▸ 12/06		9566944680	**812116**	299 170	Al
Scudo II (2007>)	+/-			01/07 ▸		9464420380	**812395**	250 180	Al
Strada Pick Up	+/-			03/99 ▸ 03/03		7078698	**812283**	265 205	Cu
Talento	+/-			03/88 ▸ 01/94		7661840	**812337**	243 177	Al
FORD									
Cougar	+/-			09/98 ▸ 02/01		1114283	**812275**	240 156	Al
Escort (90>94)	+/-			09/90 ▸ 12/94		6183117	**812058**	265 134	Al
Escort (90>94)	+/-		RS Cosworth	03/92 ▸ 12/94		1041092	**812129**	241 137	Al
Escort (95>2001)	+/-			01/95 ▸ 09/01		6183117	**812058**	265 134	Al
Escort (95>2001)	+/-		RS Cosworth	08/95 ▸ 12/95		1041092	**812129**	241 137	Al
Fiesta (83>89)	+/-			08/83 ▸ 01/89		6114258	**812053**	180 152	Cu
Fiesta (89>95)	+/-			02/89 ▸ 07/95		6775553	**812057**	198 150	Cu
Fiesta (95>2002)	+/-			08/95 ▸ 03/02		1011670	**812272**	247 207	Al
Fiesta (2002>)	+/-			03/02 ▸ 10/05		1206926	**812320**	192 147	Al
Fiesta (2005>)	+/-			10/05 ▸		1206926	**812320**	192 147	Al
Focus (98>2004)	+/-			10/98 ▸ 08/04		1062256	**812274**	190 196	Al
Fusion	+/-			06/02 ▸		1206926	**812320**	192 147	Al
Fusion (2005>)	+/-			10/05 ▸		1206926	**812320**	192 147	Al
Galaxy (95>2006)	+/-			05/95 ▸		7291900	**812324**	262 154	Al
Galaxy (95>2006)	+/-		Rear	05/95 ▸		7204831	**812361**	171 149	Al
Granada (85>91)	+/-			05/85 ▸ 12/91		1041092	**812129**	241 137	Al
Ka	+/-			09/96 ▸ 01/00		1011670	**812272**	247 207	Al
Mondeo (96>)	+/-			08/96 ▸		1114283	**812275**	240 156	Al
Orion (90>93)	+/-			09/90 ▸ 09/93		6183117	**812058**	265 134	Al
Puma	+			05/97 ▸ 01/01		1011670	**812272**	247 207	Al
Scorpio (85>94)	+/-			03/85 ▸ 10/94		1652127	**812129**	241 137	Al
Scorpio (94>98)	+/-			10/94 ▸		1041092	**812129**	241 137	Al
Sierra (82>93)	+/-			08/82 ▸ 01/93		1652127	**812129**	241 137	Al

• **New** Nouveau **Neu** Nuevo **Novo** Nuovo **Nieuw** Nowi **Новый** Novy **Nou** Yeni **Νέους**

	A/C					OE	Valeo	DIM.	TECH
FORD									
Courrier (91>96)	+/-			08/91 ▸ 09/96		6775553	**812057**	198 150	Cu
Transit (86>91)				10/85 ▸ 08/94		6740817	**812090**	245 150	Al
Transit (95>99)	+			09/94 ▸ 12/99		7121563	**812277**	245 152	Al
Transit (2000>)	-			01/00 ▸		4042575	**812332**	247 146	Al
Transit (2000>)	+			01/00 ▸		4166487	**812364**	247 146	Al
HYUNDAI									
Accent	+/-			07/94 ▸ 01/03		9722122000	**812409**	195 170	Al
Atos	+/-			01/98 ▸		9712302000	**812396**	172 170	Al
Coupé	+/-			05/96 ▸ 12/01		9722122001	**812409**	195 170	Al
i30	A+			03/07 ▸		971382L000	**•812441**	275 200	Al
i30	A+			03/07 ▸		971381H500	**•812430**	285 215	Al
Lantra	+/-			05/95 ▸ 07/00		9722122000	**812409**	195 170	Al
Matrix	+			05/01 ▸ 01/05		9713817000	**•812431**	210 155	Al
Tucson	+/-			2004 ▸		971382E150	**•812440**		Al
INNOCENTI									
Elba ▸ 5055671	+/-			04/91 ▸		7753630	**811397**	216 157	Al
IVECO									
Daily II (1989>1996)				1989 ▸ 03/96		93930678	**812342**	298 160	Al
Daily IV (1999>)				05/99 ▸		504026720	**812340**	214 263	Al
Daily IV (1999>)				05/99 ▸		500344178	**812341**	214 263	Al
IVECO TRUCKS									
Eurocargo	-			06/91 ▸		98418409	**812132**	295 175	Al
Eurofire				06/91 ▸		98418409	**812132**	295 175	Al
Eurostar				09/92 ▸		98430072	**812133**	400 175	Al
Eurostar LD				09/92 ▸ 04/95		98430072	**812133**	400 175	Al
Eurotech			-> 433405	09/92 ▸		98430072	**812133**	400 175	Al
Eurotrakker				09/92 ▸		98430072	**812133**	400 175	Al
190						93158460	**812075**	390 175	Al
220						93158460	**812075**	390 175	Al
240						93158460	**812075**	390 175	Al
260						93158460	**812075**	390 175	Al
360						93158460	**812075**	390 175	Al
440						93158460	**812075**	390 175	Al

• **New** Nouveau **Neu** Nuevo **Novo** Nuovo **Nieuw** Nowi **Новый** Novy **Nou** Yeni **Νέους**

	A/C					OE	Valeo	DIM.	TECH
JAGUAR									
XJ (68>73)	+/-		6 cyl.	11/68 ▸ 09/94		JLM11343	**812072**	232 79	Cu
Sovereign	+/-		6 cyl.	01/84 ▸		JLM11343	**812072**	232 79	Cu
KIA									
Carnival	+/-			01/99 ▸ 04/01		0K55261H01	**812411**	185 163	Al
Carnival	+/-			05/01 ▸ 02/06		0K55261H01A	**812412**	185 163	Al
Carnival	+/-			03/06 ▸		971384D050	**•812444**	285 150	Al
Ceed	+			08/06 ▸		971381H500	**•812430**	285 215	Al
Picanto (2006>2007)				09/06 ▸ 10/07		9713807000	**•812436**	175 150	Al
Picanto (2007>)	+/-			12/07 ▸ 04/11		9713807400	**•812438**	200 165	Al
Rio	+/-			07/00 ▸ 05/05		0K30C61A10	**812410**	169 162	Al
LANCIA									
Kappa	+/-			10/94 ▸ 10/01		60815099	**812400**	280 160	Al
Dedra (89>94)	+/-		1 connect.	03/89 ▸ 06/94		7754068	**811075**	250 157	Al
Dedra (94>99)	-		2 connect.	07/94 ▸ 09/99		7754065	**812156**	250 157	Al
Dedra (94>99)	+		1 connect.	07/94 ▸ 09/99		7754068	**811075**	250 157	Al
Delta (93>99)	+/-		1 connect.	03/93 ▸ 08/99		7754068	**811075**	250 157	Al
Musa	+/-		Type Magneti Marelli	07/04 ▸		46722928	**812280**	209 159	Al
Phedra	+/-			09/02 ▸		9464420380	**812395**	250 180	Al
Thema	+/-			10/84 ▸ 11/94		82420113	**811066**	280 156	Al
Y (2000>2003)	+/-		Type Magneti Marelli	09/00 ▸ 09/03		46722928	**812280**	209 159	Al
Ypsilon (2003>)	+/-		Type Magneti Marelli	10/03 ▸		46722928	**812280**	209 159	Al
Y10	+/-			01/89 ▸ 09/92		7684054	**812334**	228 139	Al
Zeta	+/-			10/94 ▸ 08/02		9566944680	**812116**	299 170	Al
LAND ROVER									
Freelander ▸ 1A999999	+/-			10/97 ▸ 12/01		JEF100150	**812268**	235 120	Cu
MAN									
F 2000	+/-			01/94 ▸		81619010067	**812350**	370 190	Al
F 90	+/-			01/86 ▸		81619010064	**812351**	370 190	Al
L 2000	+/-			10/93 ▸		81619010065	**812346**	365 190	Al
M 2000				01/96 ▸		81619010065	**812346**	365 190	Al
M 90				10/93 ▸		81619010064	**812351**	370 190	Al
TG-A	+/-			04/00 ▸		81619016166	**812352**	370 190	Al
MERCEDES									
190 (201)	+/-			12/82 ▸ 01/93		0028355401	**812084**	300 156	Al

• **New** Nouveau **Neu** Nuevo **Novo** Nuovo **Nieuw** Nowi **Новый** Novy **Nou** Yeni **Νέους**

	A/C			2 3		OE	Valeo	DIM.	TECH
MERCEDES (.../...)									
A Class (169) (2004>)	+/-			07/04 ▸		1698300761	**818205**		Al
B Class (2005>)	+/-			05/05 ▸		1698300761	**818205**		Al
C Class (203) (2000>)	+/-			04/00 ▸		2038300161	**812321**	235 180	Al
CLK (209)	+			03/02 ▸		2038300161	**812321**	235 180	Al
CL Class (215)	+			08/99 ▸		2208300261	**812366**	239 189	Al
E Class (124)	A+			07/93 ▸ 03/98		0028355501	**812304**	217 207	Al
S Class (126)	+/-			09/79 ▸ 12/91		0028353101	**812299**	216 210	Al
S Class (220)	+			09/98 ▸		2208300261	**812366**	239 189	Al
V Class (638/2)	+/-			10/96 ▸ 12/02		0038350001	**812134**	345 182	Al
MERCEDES									
Sprinter (95>)	+/-			02/95 ▸		0038353501	**812251**	170 152	Al
Vito (96>2003)	+/-			01/96 ▸ 09/03		0038350001	**812134**	345 182	Al
MERCEDES									
O 302						0008356601	**812353**	370 227	CU
MERCEDES									
LP				▸ 1974		0018358301	**812348**	170 190	Al
LP				1980 ▸		0018359201	**812347**	320 170	Al
MK				03/87 ▸ 09/96		0028356801	**812354**	390 225	Al
NG			12V	08/73 ▸ 11/91		0028350801	**812356**	360 170	Al
NG			24V	08/73 ▸ 11/91		0028350901	**812357**	360 170	Al
SK				09/87 ▸		0028356801	**812354**	390 225	Al
MINI									
MINI (R56) (2006>)	+			11/06 ▸		64113422666	**812382**		Al
NISSAN									
Micra (K11) (92>2002)	+/-			08/92 ▸ 12/02		2714098B10	**812107**	154 185	Cu
Micra (K12) (2003>)	+/-			01/03 ▸		27140AX700	**812250**	171 167	Al
Micra (K12) (2003>)	+/-		CTP 1500W	01/03 ▸		27143AX00	**812249**	172 98	Al
Primera (P10) (90>2001)	+/-			02/90 ▸ 02/02		5658030101	**812108**	190 152	Cu
Sunny (N14/Y10) (90>95)	+/-			10/90 ▸ 12/96		2714061J15	**812108**	190 152	Cu
NISSAN									
Primastar	+/-			09/02 ▸		7701473279	**812375**	265 149	Al

• **New** Nouveau **Neu** Nuevo **Novo** Nuovo **Nieuw** Nowi **Новый** Novy **Nou** Yeni **Νέους**

	A/C					OE	Valeo	DIM.	TECH
OPEL									
Astra F (91>98)	+/-		Type Delphi	03/91 ▸ 02/01		1806116	**812146**	182 190	Al
Astra G (98>)	-		Type Delphi	09/98 ▸		1806002	**812146**	182 190	Al
Astra G (98>)	+/-		Type Behr	02/98 ▸ 08/00		1618142	**812222**	210 180	Al
Astra G (98>)	+/-		Type Delphi	02/98 ▸ 12/01		1618206	**812285**	210 184	Al
Astra G (98>)	+/-		Type Delphi	01/02 ▸		1618134	**812284**	210 184	Al
Calibra	+/-		Type Delphi	09/89 ▸ 07/97		1806002	**812146**	182 190	Al
Corsa B (93>2000)	+/-			03/93 ▸ 08/00		1618020	**812149**	190 159	Cu
Corsa C (2000>2006)	+/-			09/00 ▸ 06/06		1618222	**812225**	167 171	Al
Corsa D (2006>)	-			07/06 ▸		1618288	**812363**	180 165	Al
Frontera				10/91 ▸ 09/98		1806124	**812077**	160 160	
Kadett E (84>91)	-			08/84 ▸ 01/91		1806110	**812150**	190 182	Al
Meriva	+/-			05/03 ▸		1618288	**812363**	180 165	Al
Omega A (86>94)	+/-			10/86 ▸ 02/94		1618044	**812110**	239 158	Al
Omega B (94>)	+/-			02/94 ▸ 07/03		1618248	**812126**	250 182	Al
Signum	+/-			06/03 ▸		1618260	**812253**	185 169	Al
Senator B (87>93)	+/-			02/87 ▸ 08/93		1618044	**812110**	239 158	Al
Tigra (94>2003)	+/-			10/94 ▸ 01/01		1618020	**812149**	190 159	Cu
Tigra TwinTop (2004>)	+/-			07/04 ▸		1618222	**812225**	167 171	Al
Vectra A	+/-		Type Delphi	09/88 ▸ 09/95		1806002	**812146**	182 190	Al
Vectra B	-			02/99 ▸ 06/03		1843107	**812117**	205 181	Cu
Vectra B	+			10/95 ▸ 06/03		1618110	**812118**	250 182	Al
Vectra C	+/-			04/02 ▸		1618260	**812253**	185 169	Al
Zafira	+/-		Type Behr	01/99 ▸		1618142	**812222**	210 180	Al
OPEL									
Combo (85>93)	+/-			07/85 ▸ 03/93		1806110	**812150**	190 182	Al
Combo (93>2001)	+/-			03/93 ▸ 09/01		1618020	**812149**	190 159	Cu
Combo (2001>)	+/-			10/01 ▸		1618222	**812225**	167 171	Al
Vivaro	+/-			05/01 ▸		4409453	**812375**	265 149	Al
PEUGEOT									
106 (91>96)	+/-		Type Valeo	09/91 ▸ 03/96		644872	**812016**	234 138	Al
106 (91>96)	+/-		Type Behr	09/91 ▸ 03/96		644875	**812114**	239 139	Al
106 (96>2003)	+/-		Type Valeo	03/96 ▸ 07/03		644872	**812016**	234 138	Al
106 (96>2003)	+/-		Type Behr	03/96 ▸ 07/03		644875	**812114**	239 139	Al
1007	+/-			04/05 ▸		6445PT	**812235**	233 82	Al
1007	+/-			04/05 ▸		6448K9	**812234**	250 140	Al
205	+/-		Type Valeo	02/83 ▸ 09/98		6448G2	**883965**	234 138	Al
205	+/-		Type Behr	02/83 ▸ 09/98		644851	**812399**	234 138	Al

• **New** Nouveau **Neu** Nuevo **Novo** Nuovo **Nieuw** Nowi **Новый** Novy **Nou** Yeni **Νέους**

	A/C			2 3		OE	Valeo	DIM.	TECH
PEUGEOT (.../...)									
206	+/-			09/98 ▸		6448G3	**812221**	247 134	Al
206 CC	+/-			10/00 ▸		6448G3	**812221**	247 134	Al
206 SW	+/-			05/02 ▸		6448G3	**812221**	247 134	Al
207	+/-			03/06 ▸		6448P9	**812378**	245 158	Al
207	+/-			03/06 ▸		6445PT	**812235**	233 82	Al
208				03/12 ▸		6436P9	**•515139**		Al
306 (93>)	+/-		Type Valeo	02/93 ▸ 09/02		644878	**812005**	234 157	Al
306 (93>)	+/-		Type Behr	02/93 ▸ 09/02		6448C8	**812044**	234 157	Al
306 (93>)	+/-		Type Valeo	02/93 ▸ 09/02		644880	**812006**	234 157	Al
307 (2001>2004)	A+		Type Behr	03/01 ▸		6448K0	**812322**	242 135	Al
307 (2001>2004)	M+		Gasoline	03/01 ▸		6448K3	**812338**	249 141	Al
307 (2001>2004)	M+		Hdi	03/01 ▸		6448K4	**812339**	249 130	Al
308	+/-			09/07 ▸ 09/09		6448S4	**812416**		Al
308	+/-			10/09 ▸		6448V6	**812417**		Al
309 (85>94)	+/-		Type Valeo	08/85 ▸ 08/94		6448G2	**883965**	234 138	Al
309 (85>94)	+/-		Type Behr	08/85 ▸ 08/94		644851	**812399**	234 138	Al
405 (87>96)	+/-		Type Valeo Ipra	06/87 ▸ 10/96		644877	**883976**	250 157	Al
405 (87>96)	+/-		Type Behr	06/87 ▸ 10/96		644874	**812115**	248 157	Al
405 (87>92)	+/-		Connecting Hose	06/87 ▸ 06/92		6464C8	**508555**	345 65	Al
406 (95>99) ▸ 7980	+/-		Type Valeo Ipra	10/95 ▸ 06/98		644877	**883976**	250 157	Al
406 (95>)	+/-			06/98 ▸ 04/04		6448G9	**812181**	282 181	Al
406 (95>99)	+/-		Type Behr	10/95 ▸ 04/99		644874	**812115**	248 157	Al
406 Break (99>)	+/-			01/00 ▸		6448G9	**812181**	282 181	Al
406 Coupé (97>)	+/-			05/99 ▸		6448G9	**812181**	282 181	Al
504	+/-			08/70 ▸ 09/93		644855	**883737**	193 150	Al
505	+/-			05/79 ▸ 01/90		644854	**883674**	250 156	Al
508	+			01/11 ▸		6448W9	**812424**		
508				01/11 ▸		6436P9	**•515139**		Al
605 (89>99)	+/-			10/89 ▸ 05/99		644889	**812037**	290 157	Al
607 (2000>2004)	+			05/00 ▸ 09/04		6448J6	**812212**	289 157	Al
806 (94>2002)	+/-			07/94 ▸ 05/02		6448A7	**812116**	299 170	Al
PEUGEOT									
Boxer (94>2001)	+/-			02/94 ▸ 12/01		6448F9	**812141**	220 185	Al
Boxer (94>)	+/-			06/99 ▸		6448H8	**812358**	290 158	Al
Expert	+/-			09/95 ▸ 12/03		6448A7	**812116**	299 170	Al
Expert II	+/-			01/04 ▸		6448A7	**812116**	299 170	Al
J5	-		Type Magneti Marelli	09/90 ▸ 02/94		644862	**812337**	243 177	Al

• **New** Nouveau **Neu** Nuevo **Novo** Nuovo **Nieuw** Nowi **Новый** Novy **Nou** Yeni **Νέους**

	A/C					OE	Valeo	DIM.	TECH
PEUGEOT (.../...)									
P4				01/86 ▸		644855	**883737**	193 150	Al
Partner (96>)	+/-		Type Valeo	06/96 ▸		644878	**812005**	234 157	Al
Partner (96>)	+/-		Type Valeo	06/96 ▸		644880	**812006**	234 157	Al
Ranch (96>)	+/-		Type Valeo	06/96 ▸		644878	**812005**	234 157	Al
PORSCHE									
924	+/-			07/85 ▸ 07/88		171819031D	**812034**	234 157	Al
944	+/-			06/81 ▸ 02/85		171819031D	**812034**	234 157	Al
RENAULT									
R5	-			01/72 ▸ 06/85		7701034539	**812032**	147 138	Al
Super 5	+/-			06/84 ▸ 12/96		7701027078	**883790**	212 156	Al
R9	+/-			10/81 ▸ 09/88		7701027078	**883790**	212 156	Al
R11	+/-			07/82 ▸ 07/89		7701027078	**883790**	212 156	Al
R19	+/-			07/88 ▸ 11/95		7701204680	**812157**	234 157	Cu
R25	+/-			09/83 ▸ 01/92		7701032225	**812015**	263 152	Al
Alliance	+/-			06/82 ▸ 06/87		7701027078	**883790**	212 156	Al
Avantime	+			09/01 ▸ 05/03		6025370415	**812288**	212 157	Al
Clio	+/-			06/90 ▸ 02/98		7701204680	**812157**	234 157	Cu
Clio II	+/-			03/98 ▸ 09/05		7701045552	**812169**	234 157	Cu
Clio III	+/-			09/05 ▸		7701208766	**812373**	175 169	Al
Encore	+/-			09/83 ▸ 01/87		7701027078	**883790**	212 156	Al
Espace (84>91)	+/-			09/84 ▸ 01/91		7701027078	**883790**	212 156	Al
Espace II (91>96)	+/-			07/91 ▸ 08/96		6025170679	**812139**	255 230	Al
Espace III (96>2000)	+/-		Left / Gauche	10/96 ▸ 06/00		6025370414	**812287**	212 157	Al
Espace III (96>2000)	+/-		Right / Droite	10/96 ▸ 06/00		6025370415	**812288**	212 157	Al
Espace III (2000>2002)	+/-		Left / Gauche	07/00 ▸ 10/02		6025370414	**812287**	212 157	Al
Espace III (2000>2002)	+/-		Right / Droite	07/00 ▸ 10/02		6025370415	**812288**	212 157	Al
Laguna (94>98)	-		Type Valeo	01/94 ▸ 04/98		7701039481	**812048**	260 152	Cu
Laguna (94>98)	+/-		Type Behr	01/94 ▸ 04/98		7701038542	**812113**	260 152	Al
Laguna (94>98)	+/-		Type Behr	01/94 ▸ 04/98		7701042517	**812112**	234 180	Al
Laguna (98>2000)	-		Type Valeo	05/98 ▸ 12/00		7701039481	**812048**	260 152	Cu
Laguna (98>2000)	+/-		Type Behr	05/98 ▸ 12/00		7701038542	**812113**	260 152	Al
Laguna (98>2000)	+/-		Type Behr	05/98 ▸ 12/00		7701042517	**812112**	234 180	Al
Lutecia (Jap)	+/-			10/94 ▸ 02/98		7701204680	**812157**	234 157	Cu
Mégane (95>99)	+/-			11/95 ▸ 02/99		7701204680	**812157**	234 157	Cu
Mégane (99>)	+/-			02/99 ▸		7701204680	**812157**	234 157	Cu
Mégane II ▸ 031212	+/-			09/02 ▸ 12/03		7701208323	**812247**	220 150	Al

• **New** Nouveau **Neu** Nuevo **Novo** Nuovo **Nieuw** Nowi **Новый** Novy **Nou** Yeni **Νέους**

	A/C					OE	Valeo	DIM.	TECH
RENAULT (.../...)									
Mégane II 70522 ▸	+/-			09/02 ▸		7701209524	**812423**		
Mégane II	+/-		1000W	09/02 ▸		7701207715	**812235**	233 82	Al
Mégane III	+/-			11/08 ▸		271159831R	**812413**		Al
Mégane Scénic (96>2003)	+/-		HP	10/96 ▸ 04/03		7701205450	**812161**	260 158	Cu
Mégane Scénic (96>2003)	+/-			10/96 ▸ 04/03		7701205451	**812162**	260 158	Cu
Scénic II ▸ 040120	+/-			05/03 ▸ 03/04		7701208323	**812247**	220 150	Al
Scénic II	+/-		1000W	05/03 ▸		7701207715	**812235**	233 82	Al
Modus	+/-			09/04 ▸ 11/05		7701208381	**812308**	167 169	Al
Modus	+/-			11/05 ▸		7701208766	**812373**	175 169	Al
Modus	+/-			09/04 ▸		7701060003	**812309**	146 97	Al
Safrane	+/-			09/96 ▸ 11/00		7701035891	**812014**	290 157	Cu
Twingo (93>)	+/-			03/93 ▸ 09/01		7701036909	**812154**	210 160	Al
Twingo III (2007>)	+/-			07/07 ▸		7701208766	**812373**	175 169	Al
RENAULT									
Express (85>97)	+/-			09/85 ▸ 08/97		7701027078	**883790**	212 156	Al
Extra (85>97)	+/-			09/85 ▸ 08/97		7701027078	**883790**	212 156	Al
Kangoo (97>2003)	+/-		1.2, 1.4, 1.9D	09/97 ▸ 02/03		7701205538	**812223**	234 152	Al
Kangoo (97>2003)	+/-		1.6, 1.6 i 16V	12/99 ▸ 02/03		7701204680	**812157**	234 157	Cu
Kangoo (2003>)	+/-			03/03 ▸		7701205538	**812223**	234 152	Al
Master (80>97)	-			08/80 ▸ 09/97		7701034291	**812045**	248 190	Al
Master (97>2003)	+/-			09/97 ▸ 09/03		7701205584	**812170**	330 157	Cu
Rapid (85>91)	+/-			09/85 ▸ 08/91		7701027078	**883790**	212 156	Al
Trafic (80>2001)	-			07/80 ▸ 03/01		7704000112	**883739**	234 175	Cu
Trafic (2001>)	+/-			04/01 ▸		7701473279	**812375**	265 149	Al
RENAULT-IRISBUS									
R312 BUS				01/88 ▸ 06/93		5010104657	**812355**	420 158	CU
RENAULT TRUCKS									
C-Range				06/88 ▸		5000739631	**812026**	360 193	Al
AE				01/90 ▸		5000294090	**812349**	340 227	Al
AE				01/90 ▸		5001829118	**812130**	340 226	Al
Magnum E-Tech				02/00 ▸		5001829118	**812130**	340 226	Al
Premium	+/-			06/96 ▸		5001833355	**812128**	330 155	Al
Premium	+/-		TROPIC	06/96 ▸		5001833355	**812128**	330 155	Al

• **New** Nouveau **Neu** Nuevo **Novo** Nuovo **Nieuw** Nowi **Новый** Novy **Nou** Yeni **Νέους**

	A/C					OE	Valeo	DIM.	TECH
ROVER									
100	+/-			09/90 ▸ 12/98		JEM10002	**812071**	187 150	Cu
200 (89>95)	+/-			10/89 ▸ 09/92		JEF10002	**812069**	195 91	Cu
400 (90>95)	+/-			03/90 ▸ 09/92		JEF10002	**812069**	195 91	Cu
600	+/-			04/93 ▸ 08/98		JEF100060	**812070**	220 142	Cu
Metro	+/-			10/80 ▸ 09/90		BAU5230	**812039**	172 152	Cu
Metro	+/-			09/90 ▸ 09/92		JEM10002	**812071**	187 150	Cu
Mini	-			06/59 ▸ 09/84		37H7216	**881769**	147 138	Cu
Mini	+/-			10/84 ▸ 01/99		JEF10005	**812028**	161 138	Al
SAAB									
9000	+/-			06/84 ▸		9620238	**812027**	280 157	Al
9-3 (2002>)	+/-			09/02 ▸		93171801	**812253**	185 169	Al
SEAT									
Alhambra	+/-			03/96 ▸		7M1819030B	**812324**	262 154	Al
Alhambra	+/-		Rear	03/96 ▸		7M0819030	**812361**	171 149	Al
Altea	+/-			03/04 ▸		1K0819031	**812254**	235 190	Al
Arosa	+/-			02/97 ▸		1H1819031B	**812030**	234 157	Al
Arosa	+/-			02/97 ▸		1H2819031A	**812031**	234 157	Al
Cordoba (93>2002)	+/-			09/93 ▸ 08/02		1H1819031B	**812030**	234 157	Al
Cordoba (93>2002)	+/-			09/93 ▸ 08/02		1H2819031A	**812031**	234 157	Al
Cordoba (2002>)	+/-			09/02 ▸		6Q0819031	**812323**	180 179	Al
Ibiza (93>2001)	+/-			02/93 ▸ 11/01		1H1819031B	**812030**	234 157	Al
Ibiza (93>2001)	+/-			02/93 ▸ 11/01		1H2819031A	**812031**	234 157	Al
Ibiza (2001>)	+/-			09/01 ▸		6Q0819031	**812323**	180 179	Al
Leon II	A+			07/05 ▸		1K0819031	**812254**	235 190	Al
Toledo (91>98)	+/-			02/91 ▸ 10/98		1H1819031A	**812030**	234 157	Al
Toledo (91>98)	+/-			02/91 ▸ 10/98		1H2819031A	**812031**	234 157	Al
Toledo (2004>)	+/-			09/04 ▸		1K0819031	**812254**	235 190	Al
SEAT									
Inca	+/-			11/95 ▸ 06/03		1H1819031B	**812030**	234 157	Al
Inca	+/-			11/95 ▸ 06/03		1H2819031B	**812031**	234 157	Al
SKODA									
Fabia	+/-			08/99 ▸		6Q0819031	**812323**	180 179	Al
Octavia (96>2000)	+/-			10/96 ▸ 08/99		1H1819031B	**812030**	234 157	Al
Octavia (96>2000)	+/-			10/96 ▸ 08/98		1H2819031B	**812031**	234 157	Al
▸ 1U-X-134 000									

• **New** Nouveau **Neu** Nuevo **Novo** Nuovo **Nieuw** Nowi **Новый** Novy **Nou** Yeni **Νέους**

	A/C			2 3		OE	Valeo	DIM.	TECH
SKODA (.../...)									
Octavia (2004>)	+/-			05/04 ▸		1K0819031	**812254**	235 190	Al
Roomster	+/-			03/06 ▸		6Q0819031	**812323**	180 179	Al
TOYOTA									
Corolla (80) (83>87)	+/-			05/83 ▸ 09/87		8710712340	**812286**	158 140	Al
VAUXHALL									
Astra II (84>91)	-			10/84 ▸ 09/91		3054182	**812150**	190 182	Al
Astra III (91>98)	+/-		Type Delphi	09/91 ▸ 02/98		52488847	**812146**	182 190	Al
Astra IV (98>)	-		Type Delphi	02/98 ▸		52488847	**812146**	182 190	Al
Astra IV (98>)	+		Type Behr	02/98 ▸ 12/99		9117283	**812222**	210 180	Al
Astra IV (98>)	+/-		Type Delphi	02/98 ▸ 12/01		9192937	**812285**	210 184	Al
Astra IV (98>)	+/-		Type Delphi	01/02 ▸		1618134	**812284**	210 184	Al
Calibra	-		Type Delphi	06/90 ▸ 07/97		52488847	**812146**	182 190	Al
Carlton	+/-			11/86 ▸ 05/94		1618044	**812110**	239 158	Al
Cavalier III (88>95)	+/-		Type Delphi	10/88 ▸ 10/95		52488847	**812146**	182 190	Al
Corsa I (93>2000)	+/-			04/93 ▸ 08/00		52463287	**812149**	190 159	Cu
Corsa II (2000>2006)	+/-			09/00 ▸ 06/06		9196140	**812225**	167 171	Al
Frontera			REF LOCALE UK	10/91 ▸ 09/98		91151481	**812077**	160 160	
Meriva	+/-			05/03 ▸		93175260	**812363**	180 165	Al
Omega	+/-			04/94 ▸		9194851	**812126**	250 182	Al
Senator	+/-			09/87 ▸ 08/93		1618044	**812110**	239 158	Al
Signum	+/-			06/03 ▸		93171801	**812253**	185 169	Al
Tigra	+/-			11/94 ▸ 01/01		52463287	**812149**	190 159	Cu
Tigra Twintop	+/-			07/04 ▸		9196140	**812225**	167 171	Al
Vectra (95>2002)	-			10/95 ▸ 03/02		90463839	**812117**	205 181	Cu
Vectra (95>2002)	+/-			10/95 ▸ 03/02		9118440	**812118**	250 182	Al
Vectra C	+/-			04/02 ▸		93171801	**812253**	185 169	Al
Zafira (99>2003)	M+		Type Behr	05/99 ▸ 06/03		9117283	**812222**	210 180	Al
Zafira (2003>)	+		Type Behr	07/03 ▸		9117283	**812222**	210 180	Al
VAUXHALL									
Combo	+/-			10/93 ▸ 09/01		52463287	**812149**	190 159	Cu
Combo (2002>)	+/-			10/01 ▸		9196140	**812225**	167 171	Al
Vivaro	+/-			08/01 ▸		91158692	**812375**	265 149	Al
VOLKSWAGEN									
Corrado	+/-			09/88 ▸ 07/95		191819031F	**812030**	234 157	Al

• **New** Nouveau **Neu** Nuevo **Novo** Nuovo **Nieuw** Nowi **Новый** Novy **Nou** Yeni **Νέους**

	A/C					OE	Valeo	DIM.	TECH
VOLKSWAGEN									
Corrado	+/-			09/88 ▸ 07/95		1H2819031A	**812031**	234 157	Al
Derby (77>84)	+/-			01/77 ▸ 10/84		867819121A	**812029**	212 138	Al
Eos	+/-			05/06 ▸		1K0819031	**812254**	235 190	Al
Fox	+/-			11/04 ▸		6Q0819031	**812323**	180 179	Al
Golf I (74>83)	-			08/76 ▸ 07/83		171819031E	**812034**	234 157	Al
Golf I Cabriolet (79>93)	-			01/79 ▸ 07/93		171819031E	**812034**	234 157	Al
Golf I Cabriolet (79>93)	+/-			04/84 ▸ 07/92		1H1819031A	**812030**	234 157	Al
Golf I Cabriolet (79>93)	+/-			04/84 ▸ 07/92		1H2819031A	**812031**	234 157	Al
Golf II (83>91)	+/-			08/83 ▸ 11/91		191819031F	**812030**	234 157	Al
Golf II (83>91)	+/-			08/83 ▸ 11/91		1H2819031A	**812031**	234 157	Al
Golf II Cabriolet (93>98)	+/-			09/93 ▸ 02/98		1H1819031A	**812030**	234 157	Al
Golf II Cabriolet (93>98)	+/-			09/93 ▸ 02/98		1H2819031A	**812031**	234 157	Al
Golf III (91>97)	+/-			11/91 ▸ 10/97		1H1819031A	**812030**	234 157	Al
Golf III (91>97)	+/-			11/91 ▸ 10/97		1H2819031A	**812031**	234 157	Al
Golf III Cabriolet (98>2002)	+/-			03/98 ▸ 04/02		1H1819031A	**812030**	234 157	Al
Golf III Cabriolet (98>2002)	+/-			03/98 ▸ 04/02		1H2819031A	**812031**	234 157	Al
Golf IV (97>2003) ▸ 1J-X-250 000	+/-			10/97 ▸ 10/03		1H1819031A	**812030**	234 157	Al
Golf IV (97>2003) ▸ 1J-X-250 000	+/-			10/97 ▸ 10/03		1H2819031A	**812031**	234 157	Al
Golf V (2003>2008)	+/-			10/03 ▸ 09/08		1K0819031	**812254**	235 190	Al
Golf VI (2008>)	A+			10/08 ▸		1K0819031B	**812254**	235 190	Al
Golf Plus (2005>)	+/-			01/05 ▸		1K0819031	**812254**	235 190	Al
Jetta I (78>83)	-			08/78 ▸ 07/83		171819031E	**812034**	234 157	Al
Jetta II (83>92)	-			08/83 ▸ 11/92		171819031E	**812034**	234 157	Al
Jetta II (83>92)	+/-			08/83 ▸ 10/91		1H2819031A	**812031**	234 157	Al
Jetta (2005>)	+/-			08/05 ▸		1K0819031	**812254**	235 190	Al
Lupo	+/-			10/98 ▸		1H1819031A	**812030**	234 157	Al
Lupo	+/-			10/98 ▸		1H2819031A	**812031**	234 157	Al
New Beetle (98>2001) ▸ 1C-W-999 000	+/-			01/98 ▸ 07/98		1H1819031A	**812030**	234 157	Al
Passat (73>88)	+/-			05/73 ▸ 07/86		171819031E	**812034**	234 157	Al
Passat (88>97)	+/-			04/88 ▸ 05/97		1H1819031A	**812030**	234 157	Al
Passat (88>97)	+/-			04/88 ▸ 05/97		1H2819031A	**812031**	234 157	Al
Passat (2005>)	+/-			03/05 ▸		1K0819031	**812254**	235 190	Al
Polo (74>94)	+/-			08/74 ▸ 07/94		867819121A	**812029**	212 138	Al
Polo (94>2001)	+/-			10/94 ▸ 09/01		1H1819031A	**812030**	234 157	Al
Polo (94>2001)	+/-			10/94 ▸ 09/01		1H2819031A	**812031**	234 157	Al
Polo (2001>)	+/-			09/01 ▸		6Q0819031	**812323**	180 179	Al
Santana	+/-			08/81 ▸ 07/87		171819031E	**812034**	234 157	Al

• **New** Nouveau **Neu** Nuevo **Novo** Nuovo **Nieuw** Nowi **Новый** Novy **Nou** Yeni **Νέους**

	A/C					OE	Valeo	DIM.	TECH
VOLKSWAGEN (.../...)									
Scirocco	+/-			07/76 ▸ 07/92		1H1819031A	**812030**	234 157	Al
Scirocco	+/-			07/86 ▸ 08/91		1H2819031A	**812031**	234 157	Al
Sharan	+/-			07/96 ▸		7M1819030B	**812324**	262 154	Al
Sharan	+/-		Rear	07/96 ▸		7M0819030	**812361**	171 149	Al
Touran	+/-			02/03 ▸		1K0819031	**812254**	235 190	Al
Vento	+/-			11/91 ▸ 12/97		1H1819031A	**812030**	234 157	Al
Vento	+/-			11/91 ▸ 12/97		1H2819031A	**812031**	234 157	Al
VOLKSWAGEN									
Caddy (82>92)	+/-			08/82 ▸ 07/92		171819031E	**812034**	234 157	Al
Caddy (95>2004)	+/-			11/95 ▸ 06/03		1H1819031A	**812030**	234 157	Al
Caddy (95>2004)	+/-			11/95 ▸ 06/03		1H2819031A	**812031**	234 157	Al
Caddy (2004>)	+/-			02/04 ▸		1K0819031	**812254**	235 190	Al
LT (75>96)	+/-			04/75 ▸ 12/95		281265303B	**812245**	190 155	Al
LT (75>96)	+/-			04/75 ▸ 12/95		281265303B	**812245**	190 155	Al
Transporter (90>2003)	+/-			09/90 ▸ 06/03		701819031A	**812013**	212 139	Al
VOLVO									
340-360 ▸ 154579	+/-			09/82 ▸ 08/85		3200712	**812093**	204 177	Cu
440-460-480 ▸ 077174	+/-			10/88 ▸		3402363	**812326**	178 188	Al
850	+			06/91 ▸ 12/96		91442210	**812327**	190 186	Al
C70	+/-			03/97 ▸ 09/98		91442210	**812327**	190 186	Al
S60	+/-			08/00 ▸		9171503	**812328**	239 207	Al
S80	+/-			06/98 ▸		9171503	**812328**	239 207	Al
V70 (96>99)	+/-			12/96 ▸ 03/00		91442210	**812327**	190 186	Al
XC70	+/-			01/00 ▸		9171503	**812328**	239 207	Al
VOLVO TRUCKS									
FH 12 (1993>)	M			09/93 ▸		3090893	**812343**	380 190	Al
FL				10/85 ▸		1624373	**812345**	370 190	Al
FL				10/85 ▸		1697358	**812344**	370 190	Al
FM 7 (1993>)				09/93 ▸		3090893	**812343**	380 190	Al
FM 12 (1993>)				09/93 ▸		3090893	**812343**	380 190	Al

• **New** Nouveau **Neu** Nuevo **Novo** Nuovo **Nieuw** Nowi **Новый** Novy **Nou** Yeni **Νέους**

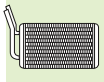

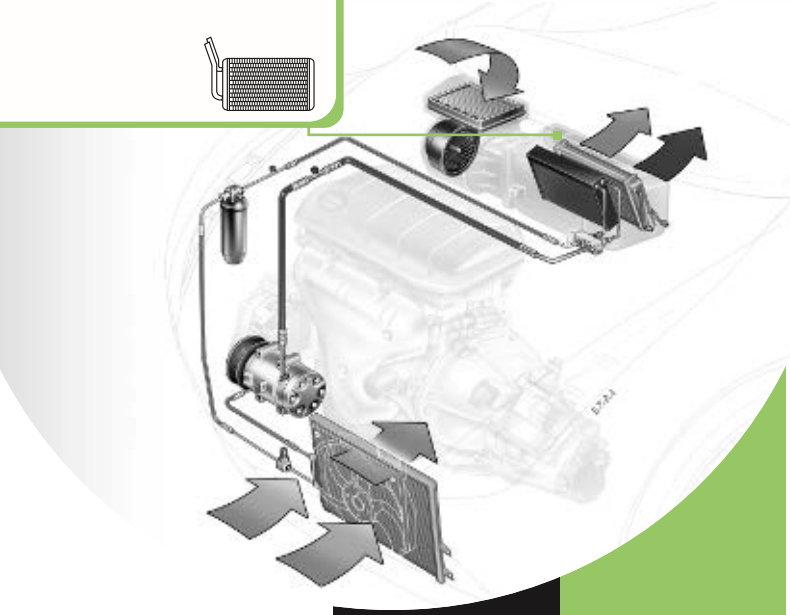

HEATER CORE

RADIATEUR DE CHAUFFAGE

HEIZUNGSKÜHLER

RADIADOR DE CALEFACCION

RADIADOR DE CHAUFFAGE

RADIATORE DI RISCALDAMENTO

KACHELRADIATEUR

NAGRZEWNICA

Радиатор Отопителя

VýMĚNÍK TEPLA

RADIATOR DE ÎNCALZIRE HABITACLU

K LORIFER R DY TÖRÜ

Ψυγείο Καλοριφέρ

TECH.COD. Valeo

VALEO

007126K/S	**812253**
033809XD	**812225**
034313V0	**812308**
602278D0	**812134**
667210T0	**812309** +
669183EV	**812382**
984202Q	**812254**
F133260G	**812029**
F602984R	**508555** CONNECTING HOSE
F603801B	**812048**
F650541W	**812013**
F652759Q	**812169**
F658065U	**812181**
F660992B	**812215**
F661407Q	**812212**
F664443Q	**812234**
F664447A	**812235** +
F665426A	**812247**
F665733E	**812255**
F665736M	**812256**
F666359R	**812250**
F667213K	**812249** +
F667511B	**812268**
F828947Z	**812002**
F833558J	**812157**
T188	**812012**
T195	**883982**
T224	**812030**
T225	**812031**
T262	**812014**
T272	**883976**
T277	**883965**
T278	**812016**
T284	**883790**
T285	**883971**
T303	**812028**
T310	**811075**
T346	**812032**
T348	**812034**

VALEO (.../...)

T350	**812036**
T351	**812037**
T49	**883468**
T54	**883520**
T58	**883739**

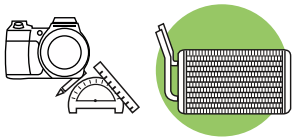

Valeo 508555 — 345x65x30

F602984R

PEUGEOT 6464C8

Valeo 811075 — 250x157x42

T310

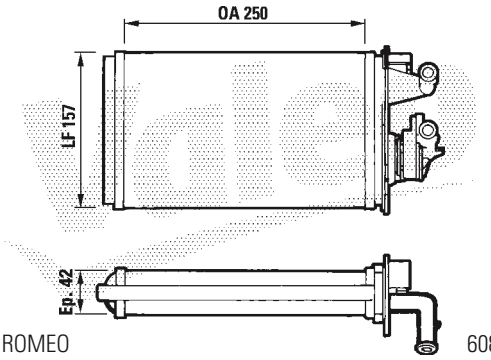

ALFA ROMEO	60809015
FIAT	7754068
LANCIA	7754068

Valeo 515139

PEUGEOT 6436P9

Valeo 811397 — 216x157x42

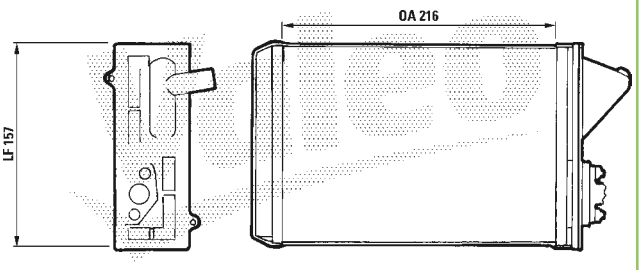

FIAT	7753630
FIAT	7754055
INNOCENTI	7753630

Valeo 811065 — 185x175x42

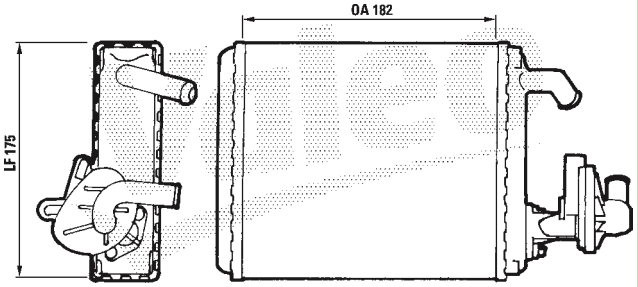

FIAT 7754062

Valeo 812002 — 236x138x42

F828947Z

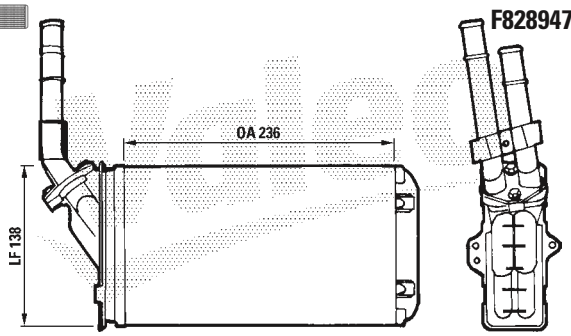

CITROËN 95230684

Valeo 811066 — 280x156x42

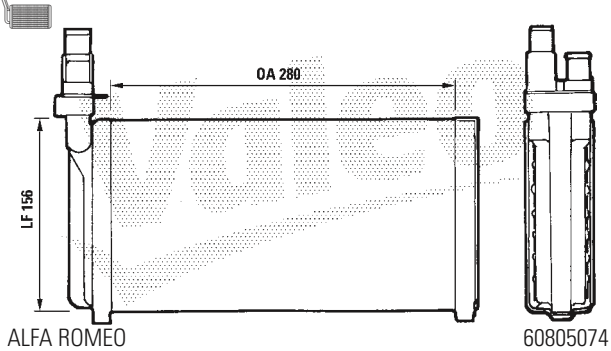

ALFA ROMEO	60805074
FIAT	82420113
LANCIA	82420113

Valeo 812005 — 234x157x42

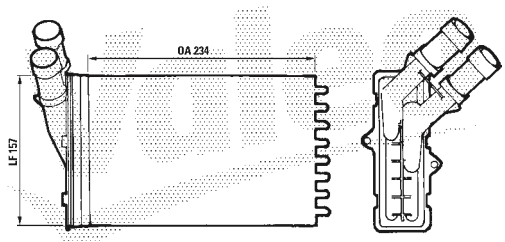

CITROËN	644878
PEUGEOT	644878

Valeo 812006 — 234x157x42

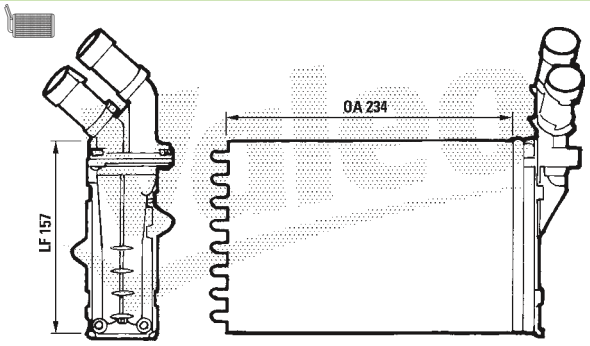

CITROËN	644880
PEUGEOT	644880

Valeo 812015 — 263x152x48

RENAULT	7701032225

Valeo 812012 — 234x157x42

T188

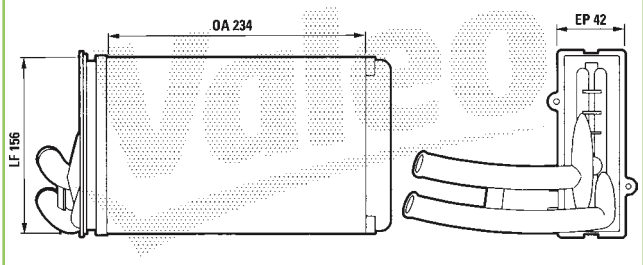

AUDI	894819031A

Valeo 812016 — 234x138x42

T278

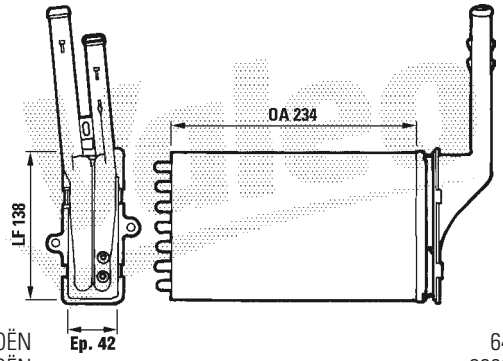

CITROËN	644872
CITROËN	96090004
PEUGEOT	644872

Valeo 812013 — 212x139x42

F650541W

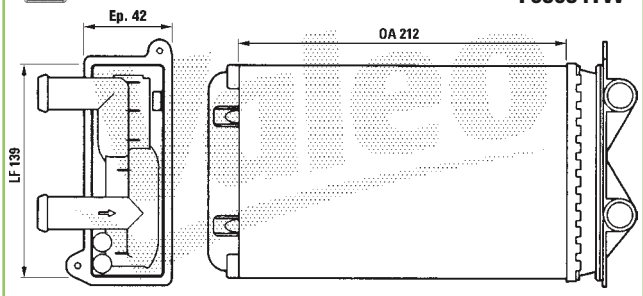

VOLKSWAGEN	701819031A

Valeo 812026 — 360x193x42

RENAULT TRUCKS	5000739631

Valeo 812014 — 290x157x42

T262

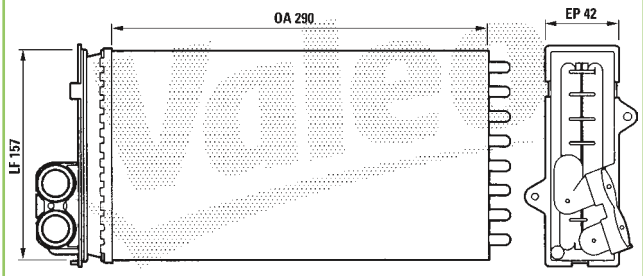

RENAULT	7701035891

Valeo 812027 — 280x157

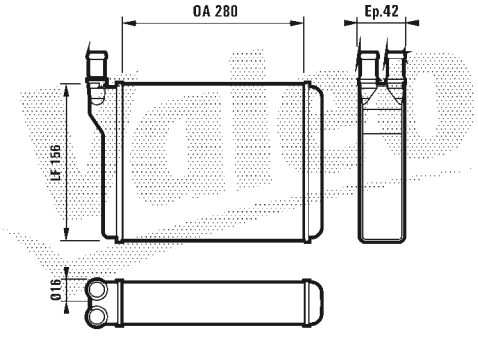

SAAB	9620238

Valeo 812028 — 161x138x42

T303

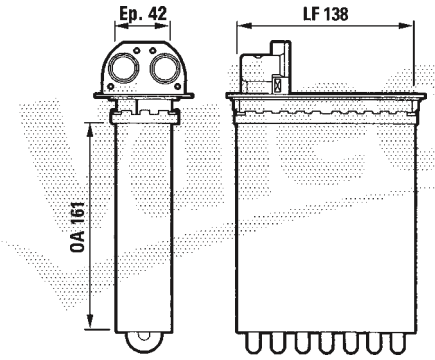

ROVER	JEF10005

Valeo 812029 — 212x138x42

F133260G

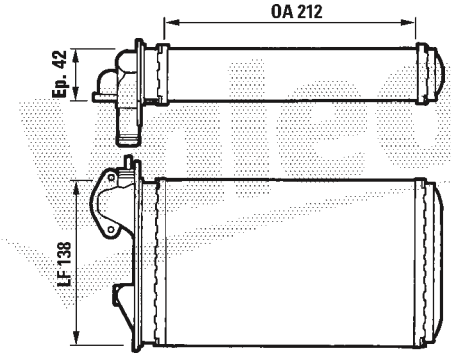

AUDI	867819121A
VOLKSWAGEN	867819121A

Valeo 812030 — 234x157x42

T224

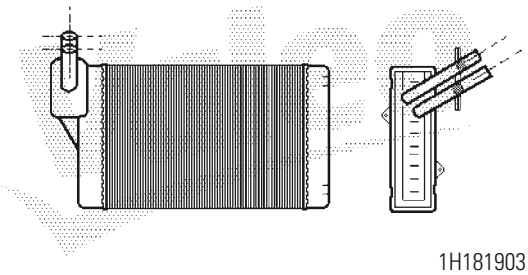

AUDI	1H1819031B
SEAT	1H1819031A/B
SKODA	1H1819031B
VOLKSWAGEN	191819031F/ 1H1819031A

Valeo 812031 — 234x157x42

T225

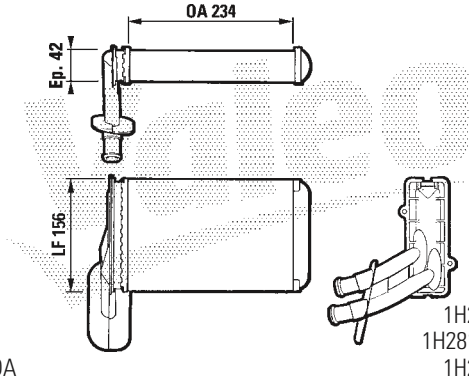

AUDI	1H2819031B
SEAT	1H2819031A/B
SKODA	1H2819031B
VOLKSWAGEN	1H2819031A

Valeo 812032 — 147x138x42

T346

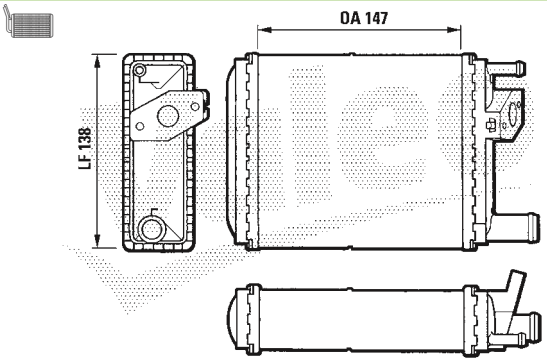

RENAULT	7701034539

Valeo 812034 — 234x156x42

T348

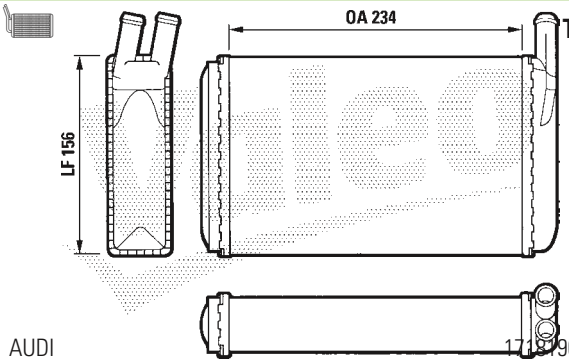

AUDI	171819031E
PORSCHE	171819031D
VOLKSWAGEN	171819031E

Valeo 812036 — 300x138x42

T350

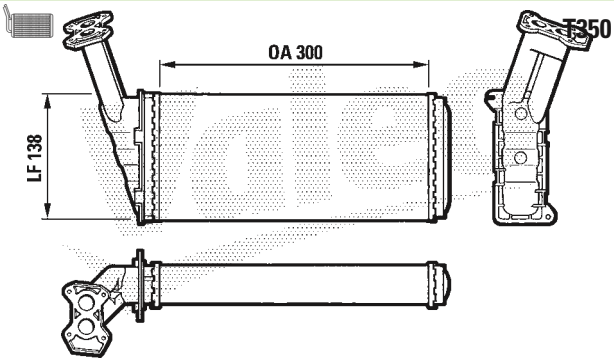

CITROËN	95495316

Valeo 812037 — 290x157x42

T351

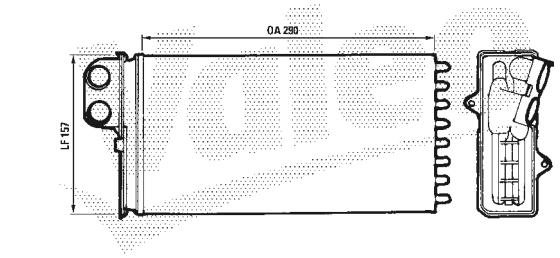

CITROËN	644889

Valeo 812039 — 172x152x32

Picture not available
Image non disponible
Nicht verfügbares Bild
Imagen no disponible
Immagine non disponibile
Zdjęcie niedostępne

ROVER — BAU5230

Valeo 812049 — 234x181x42

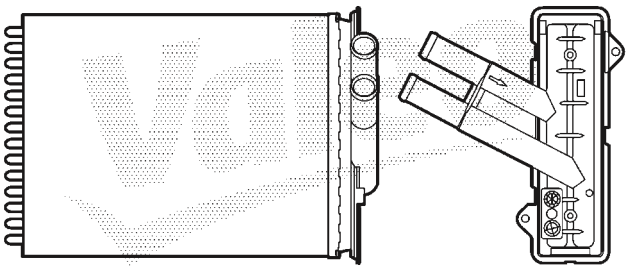

CHRYSLER — 4644708
CHRYSLER — 5011078AA

Valeo 812044 — 234x157x42

CITROËN — 6448C8

Valeo 812053 — 180x152x42

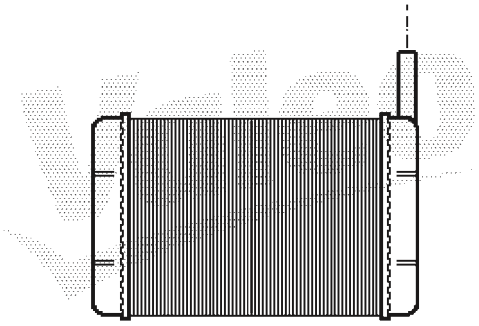

FORD — 6114258

Valeo 812045 — 248x190x42

RENAULT — 7701034291

Valeo 812057 — 198x150x42

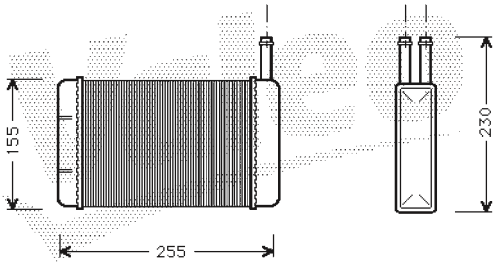

FORD — 6775553

Valeo 812048 — 260x152x42

F603801B

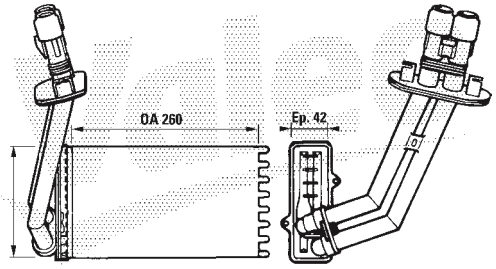

RENAULT — 7701039481

Valeo 812058 — 265x134x42

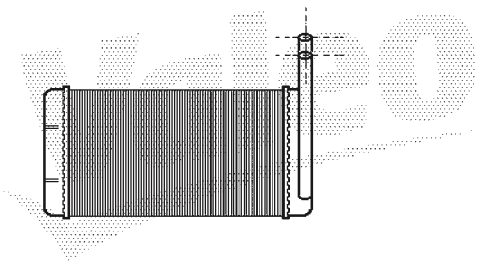

FORD — 6183117

812069 — 195x91

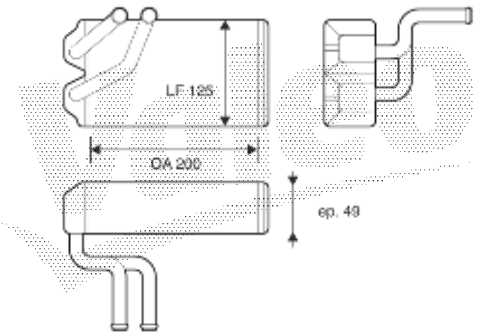

ROVER	JEF10002

812075 — 390x175x42

IVECO TRUCKS	93158460

812070 — 220x142

ROVER	JEF100060

812077

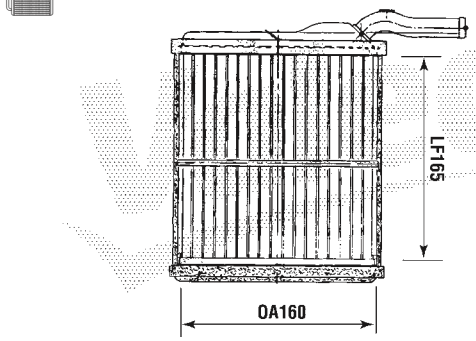

OPEL VAUXHALL	1806124 91151481

812071 — 187x150x32

ROVER	JEM10002

812081 — 200x175x42

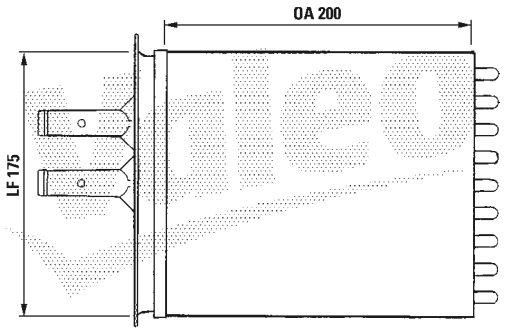

FIAT	5893932

812072 — 232x79

JAGUAR	JLM11343

812084 — 300x156x42

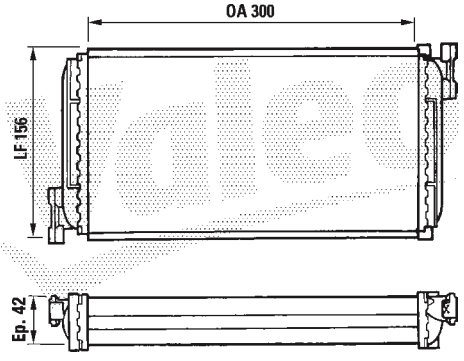

MERCEDES	0028355401

Valeo 812090 — 245x150x38

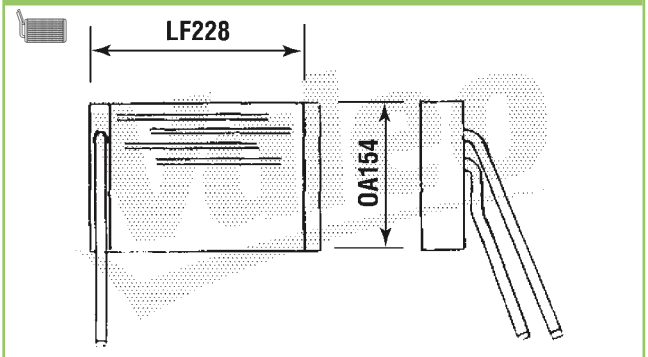

FORD — 6740817

Valeo 812110 — 239x158x46

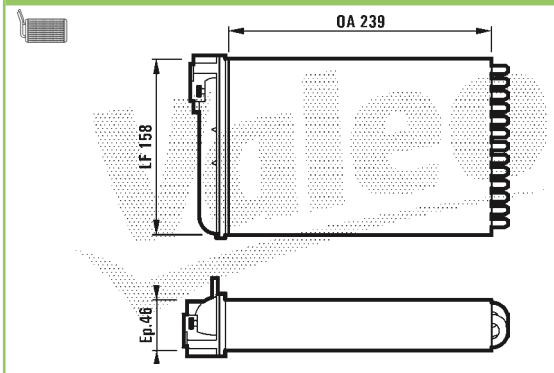

OPEL — 1618044

Valeo 812093 — 204x177x45

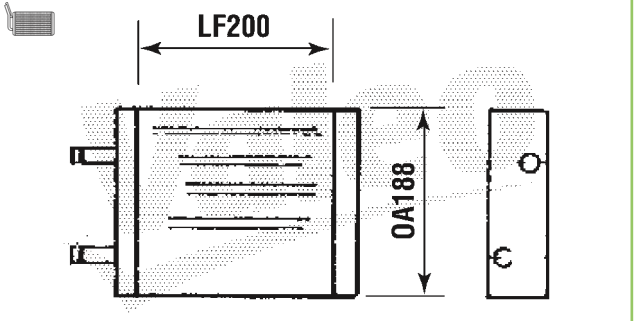

VOLVO — 3200712

Valeo 812112 — 234x180x42

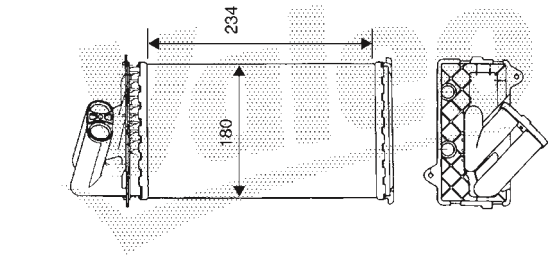

RENAULT — 7701042517

Valeo 812107 — 185x154x43

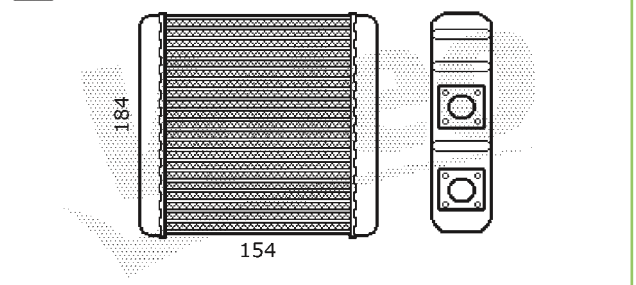

NISSAN — 2714098B10

Valeo 812113 — 260x152x42

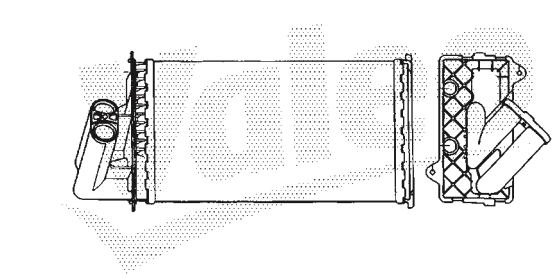

RENAULT — 7701038542

Valeo 812108 — 190x152x32

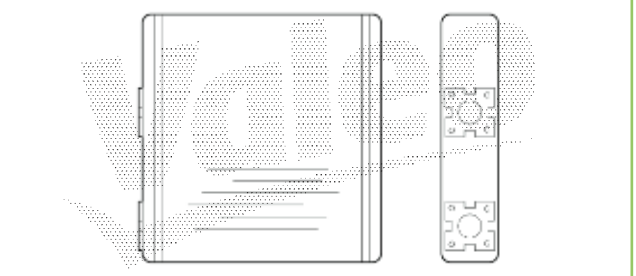

NISSAN — 271461515
NISSAN — 5658030101

Valeo 812114 — 239x139x42

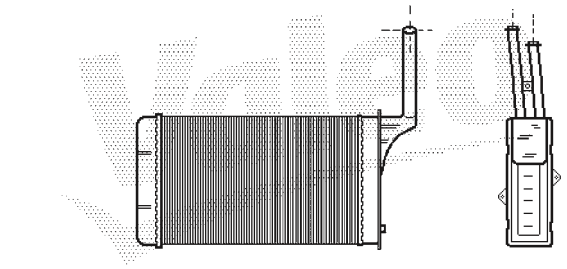

PEUGEOT — 644875

812115 — 248x157x42

PEUGEOT 644874

812116 — 299x170x42

CITROËN 6448A7
FIAT 9566944680
PEUGEOT 6448A7

812117 — 205x181x42

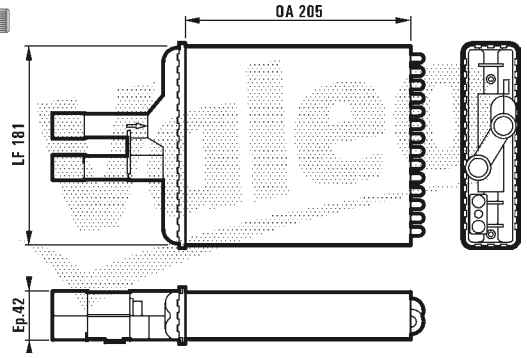

OPEL 1843107
VAUXHALL 1843107

812118 — 250x182x42

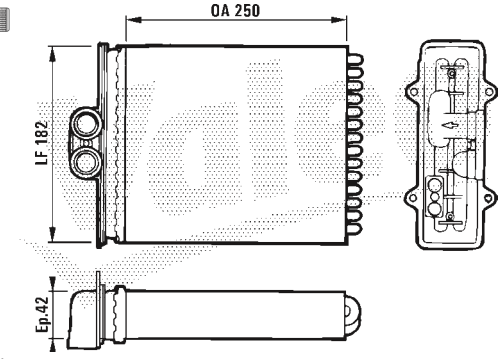

OPEL 1618110
VAUXHALL 9118440

812126 — 250x182x42

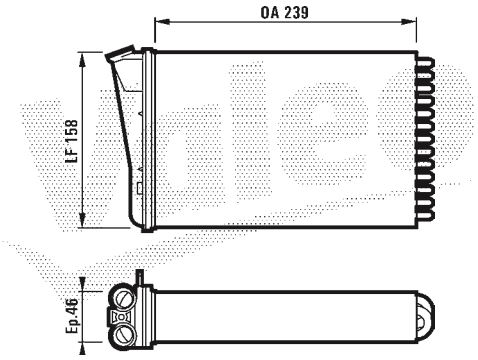

OPEL 1618248
VAUXHALL 9194851

812128 — 330x155x42

RENAULT TRUCKS 5001833355

812129 — 241x137x42

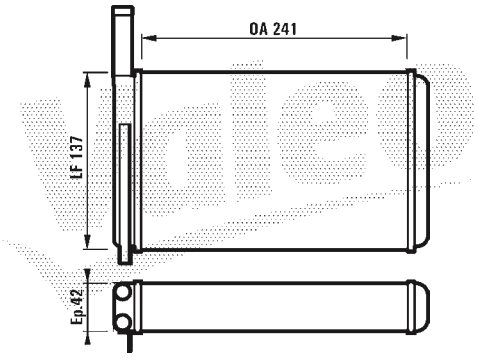

FORD 1041092
FORD 1652127

812130 — 340x226x48

Picture not available
Image non disponible
Nicht verfügbares Bild
Imagen no disponible
Immagine non disponibile
Zdjęcie niedostępne

RENAULT TRUCKS 5001829118

812132 — 295x175x42

IVECO TRUCKS 98418409

812133 — 400x175x42

IVECO TRUCKS 98430072

812134 — 343x182x42

602278D0

MERCEDES 0038350001

812139 — 255x230x50

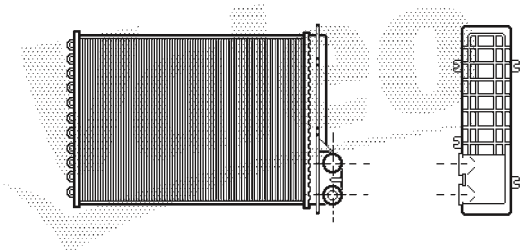

RENAULT 6025170679

812141 — 220x185x45

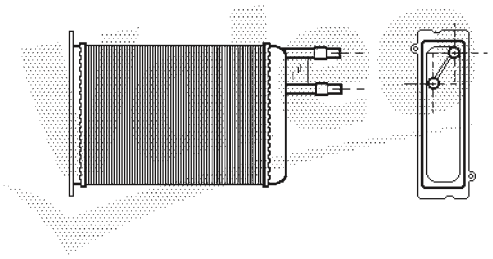

CITROËN	6448F9
FIAT	1321309080
PEUGEOT	6448F9

812145 — 195x166x60

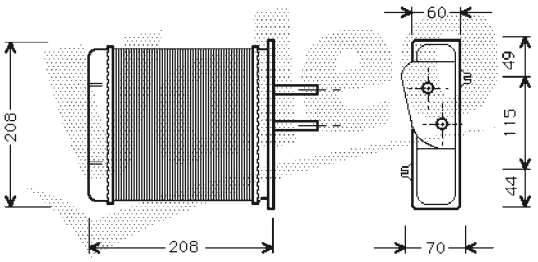

FIAT 46722095

812146 — 182x190x48

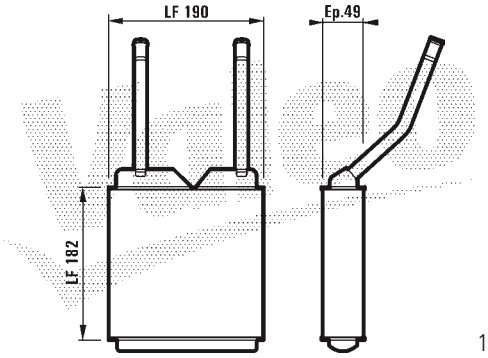

OPEL	1806002
OPEL	1806116
VAUXHALL	52488847

812148 — 190x159x49

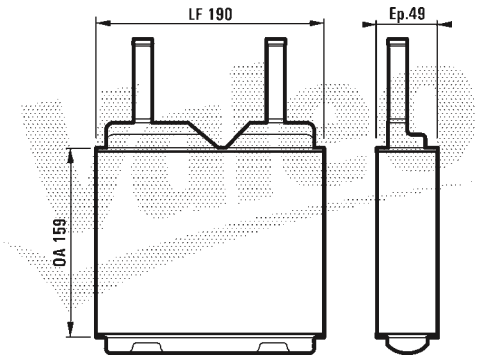

OPEL	1806108
VAUXHALL	3050602

Valeo 812149 — 190x159x49

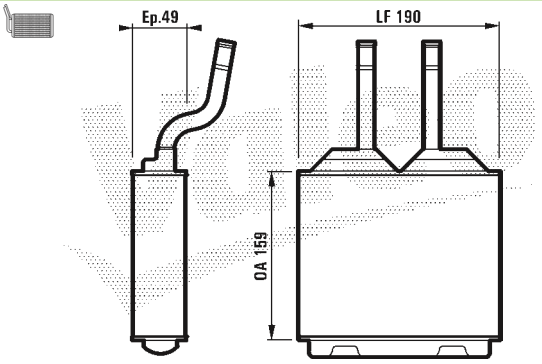

OPEL	1618020
VAUXHALL	52463287

Valeo 812157 — 234x157x45

F833558J

RENAULT	7701204680

Valeo 812150 — 190x182x49

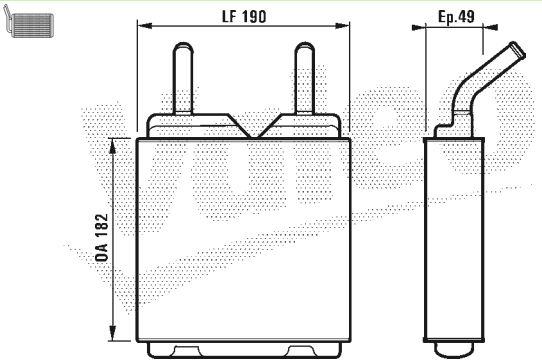

OPEL	1806110
VAUXHALL	3054182

Valeo 812161 — 260x158x42

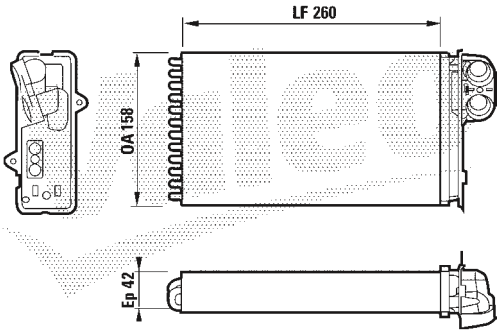

RENAULT	7701205450

Valeo 812154 — 209x160x49

RENAULT	7701036909

Valeo 812162 — 260x158x42

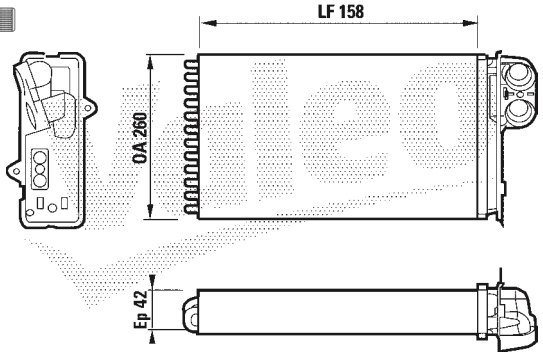

RENAULT	7701205451

Valeo 812156 — 250x157x42

FIAT	7754065
LANCIA	7754065

Valeo 812169 — 234x157x42

F652759Q

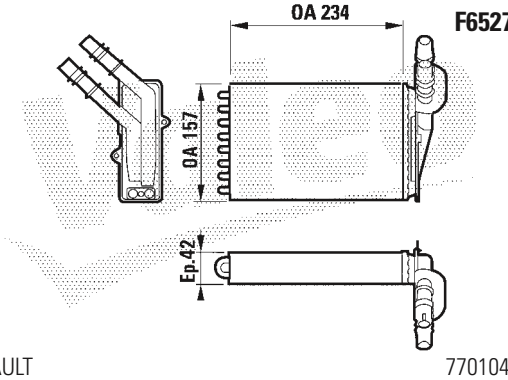

RENAULT	7701044790
RENAULT	7701045552

Valeo 812170 — 330x157x42

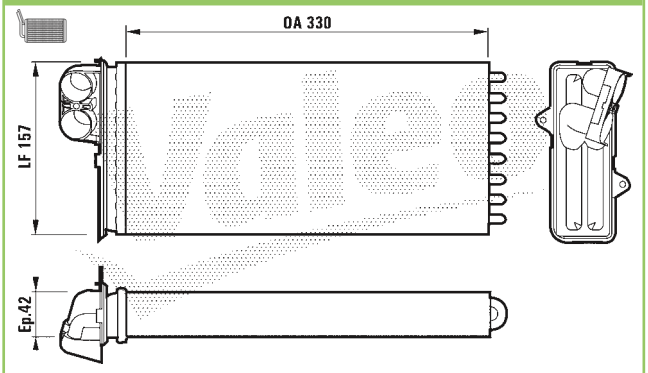

RENAULT 7701205584

Valeo 812211 — 209x159x35

FIAT 46723042

Valeo 812176 — 276x158x42

ALFA ROMEO 60779470

Valeo 812212 — 289x157x42

F661407Q

PEUGEOT 6448J6

Valeo 812181 — 282x181x42

F658065U

PEUGEOT 6448G9

Valeo 812215 — 233x157x42

F660992B

CITROËN 6448J8

Valeo 812194 — 260x154x42

FIAT 71714180

Valeo 812220 — 206x135x32

BMW 64118372783

812221 — 247x134x40

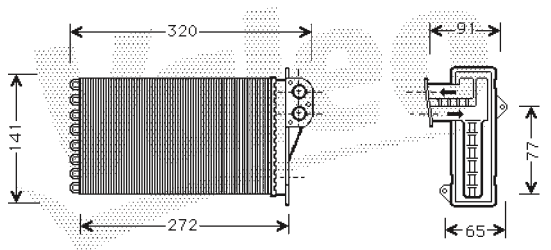

CITROËN	6448G3

812222 — 210x180x34

OPEL	1618142
VAUXHALL	9117283

812223 — 234x152x40

RENAULT	7701205538

812225 — 167x169x35

033809XD

OPEL	1618222
VAUXHALL	9196140

812234 — 250x140x42

F664443Q

CITROËN	6448K9

812235 — 233x82x20

F664447A

CITROËN	6445PT
PEUGEOT	6445PT
RENAULT	7701207715

812238 — 264x132x42

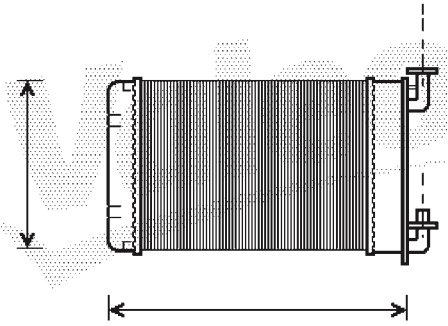

BMW	64111373772
BMW	64118391362

812239 — 190x155x40

Picture not available
Image non disponible
Nicht verfügbares Bild
Imagen no disponible
Immagine non disponibile
Zdjęcie niedostępne

BMW	64118351171

812240 190x155x50

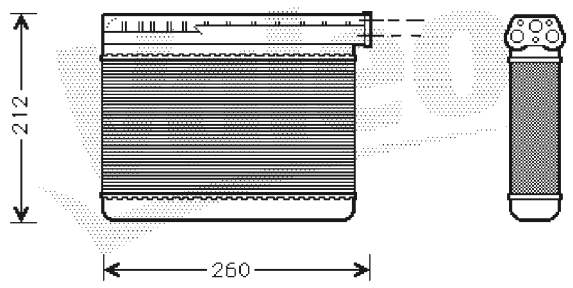

BMW	64111393212

812245 190x155x50

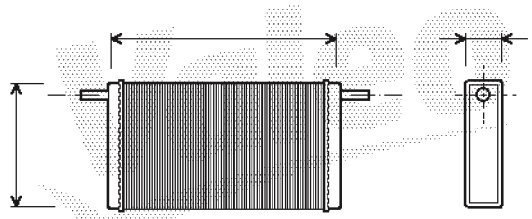

VOLKSWAGEN	281265303B

812247 220x150x49

F665426A

RENAULT	7701208323

812249 172x98

F667213K

NISSAN	27143AX00

812250 171x167x35

F666359R

NISSAN	27140AX700

812251 170x152x42

MERCEDES	0038353501

812253 185x169x35

007126K/S

SAAB	93171801

812254 235x190x60

984202Q

AUDI	1K0819031
SEAT	1K0819031
SKODA	1K0819031
VOLKSWAGEN	1K0819031

812255 — 285x150x60

F665733E

AUDI — 8E1820031

812274 — 190x196x52

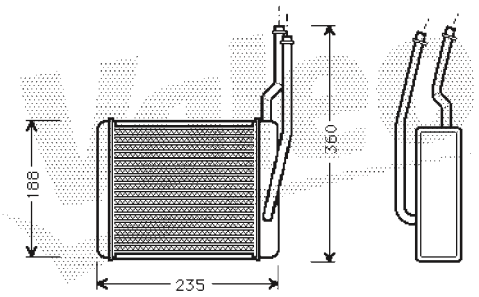

FORD — 1062256

812256 — 285x150x60

F665736M

AUDI — 8E2820031

812275 — 240x156x42

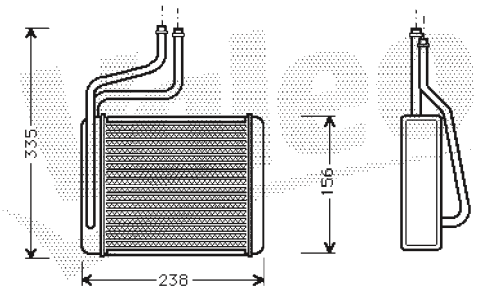

FORD — 1114283

812268 — 235x120x49

F667511B

LAND ROVER — JEF100150

812277 — 245x152x52

Picture not available
Image non disponible
Nicht verfügbares Bild
Imagen no disponible
Immagine non disponibile
Zdjęcie niedostępne

FORD — 7121563

812272 — 247x207x28

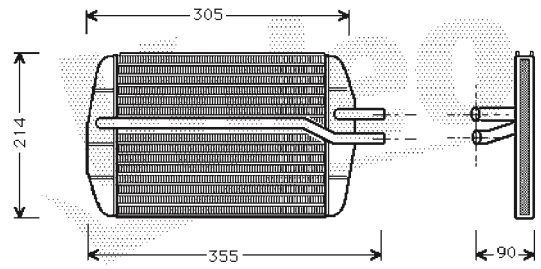

FORD — 1011670

812280 — 245x152x32

FIAT — 46722928
LANCIA — 46722928

Valeo 812281 — 250x140x42

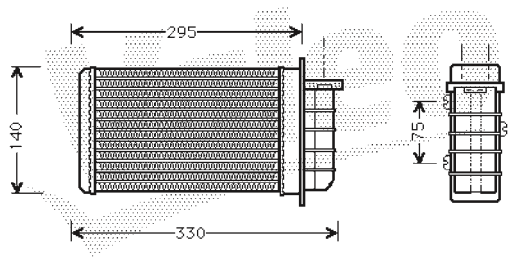

FIAT — 46722359

Valeo 812283 — 265x205x42

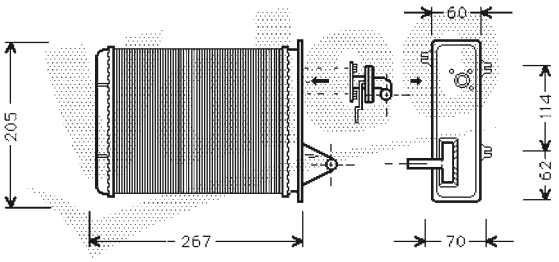

FIAT — 7078698

Valeo 812284 — 210x184x25

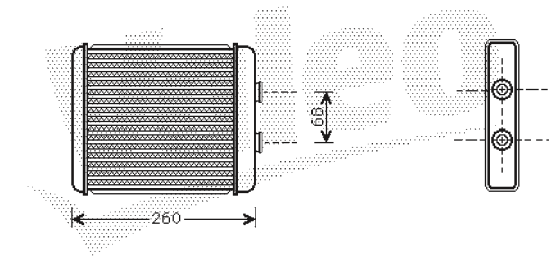

OPEL — 1618134
VAUXHALL — 1618134

Valeo 812285 — 210x184x25

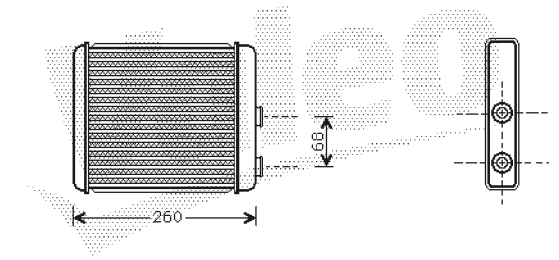

OPEL — 1618206
VAUXHALL — 9192937

Valeo 812286 — 158x140x42

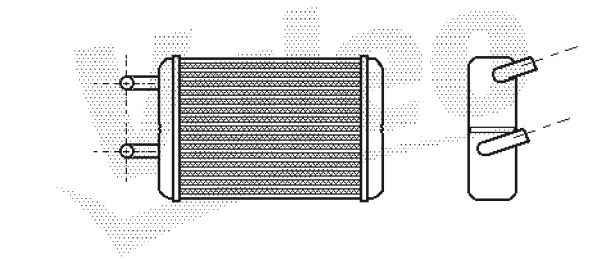

TOYOTA — 8710712340

Valeo 812287 — 212x157x42

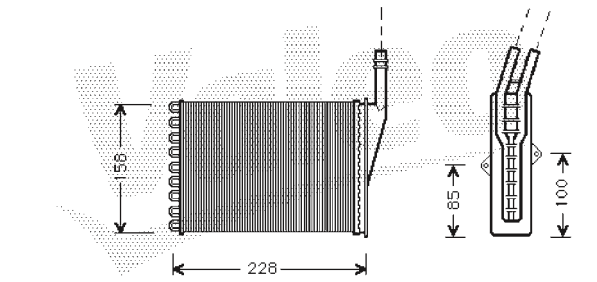

RENATLT — 6025370414

Valeo 812288 — 212x157x42

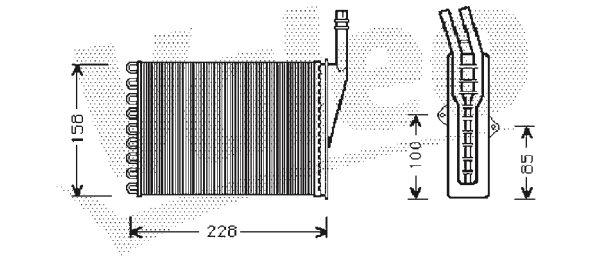

RENAULT — 6025370415

Valeo 812294 — 270x150x48

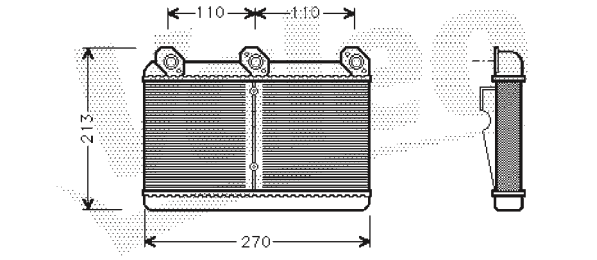

BMW — 64118372523

812296 224x152x48

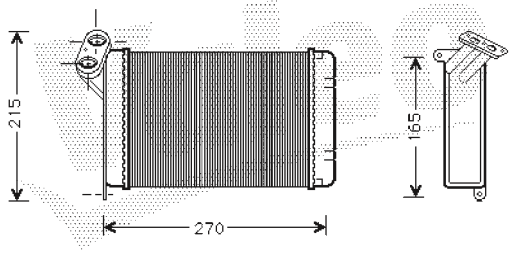

BMW 64118391363

812308 167x169x37

034313V0

RENAULT 7701208381

812299 216x210x50

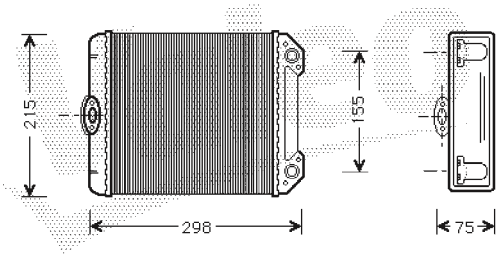

MERCEDES 0028353101

812309 146x97x24

667210T0

RENAULT 7701060003

812303 230x140x42

FIAT 7685154

812318 205x145x32

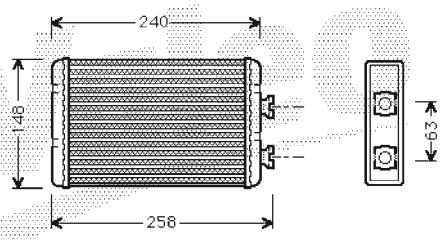

BMW 64118372771

812304 217x207x40

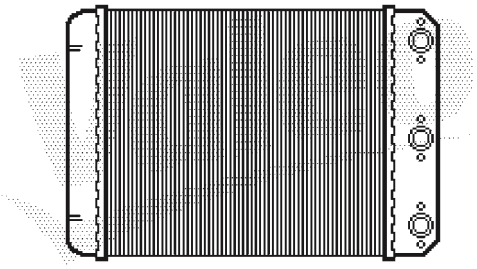

MERCEDES 0028355501

812319 179x180x32

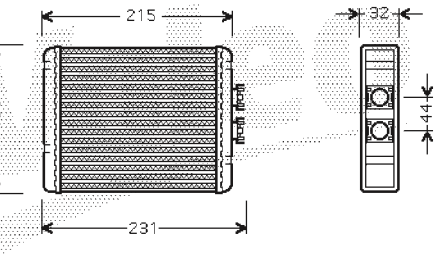

AUDI 8Z0819030

Valeo 812320 — 192x147x42

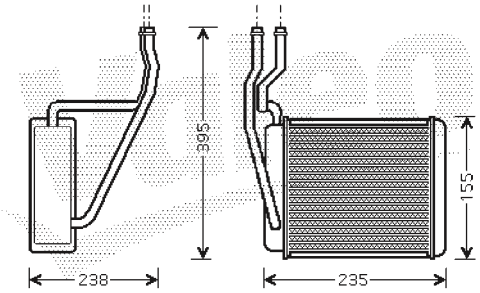

FORD	1206926

Valeo 812321 — 235x180x32

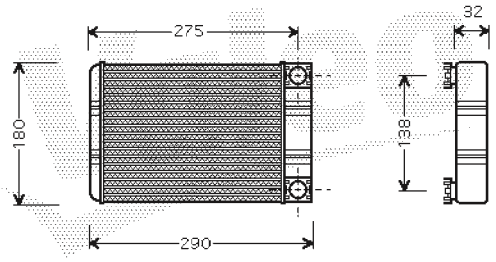

MERCEDES	2038300161

Valeo 812322 — 242x135x42

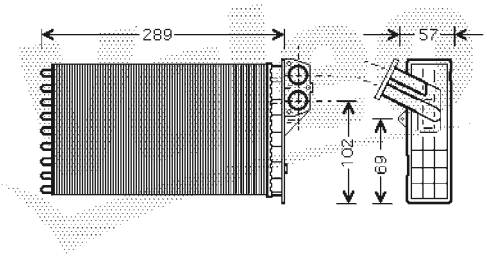

PEUGEOT	6448K0

Valeo 812323 — 180x179x32

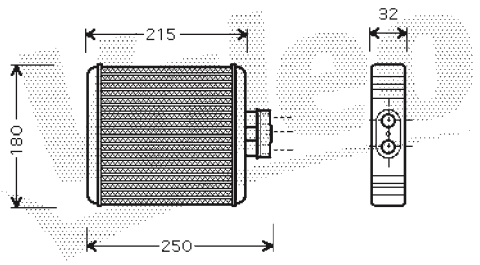

SEAT	6Q0819031
SKODA	6Q0819031
VOLKSWAGEN	6Q0819031

Valeo 812324 — 262x154x42

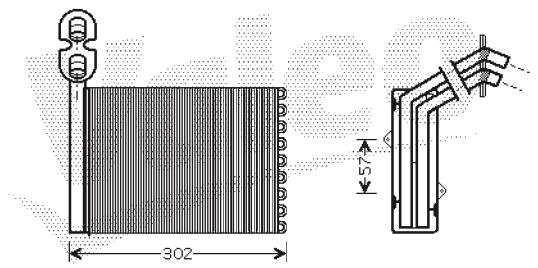

FORD	7291900
SEAT	7M1819030B
VOLKSWAGEN	7M1819030B

Valeo 812326 — 178x188x40

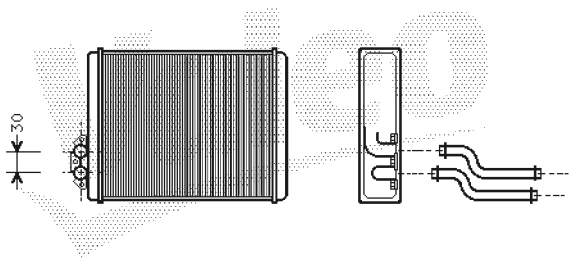

VOLVO	3402363

Valeo 812327 — 190x186x48

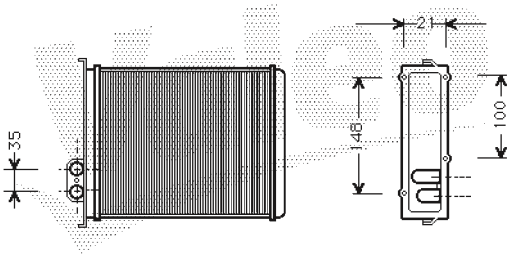

VOLVO	91442210

Valeo 812328 — 239x207x40

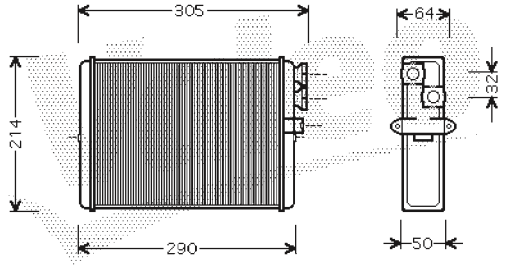

VOLVO	9171503

Valeo 812329 — 220x156x32

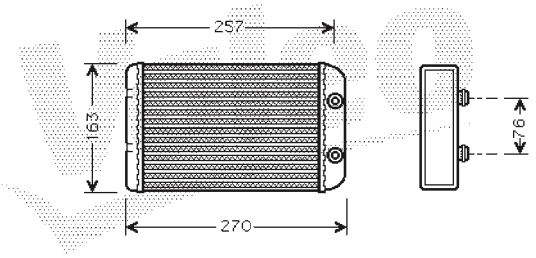

FIAT 46723450

Valeo 812336 — 180x159x42

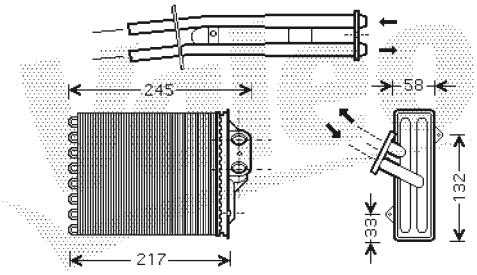

FIAT 77362540

Valeo 812332 — 247x146x42

FORD 4042575

Valeo 812337 — 243x177x42

CITROËN 644862
FIAT 7661840
PEUGEOT 644862

Valeo 812334 — 228x139x42

LANCIA 7684054

Valeo 812338 — 249x141x42

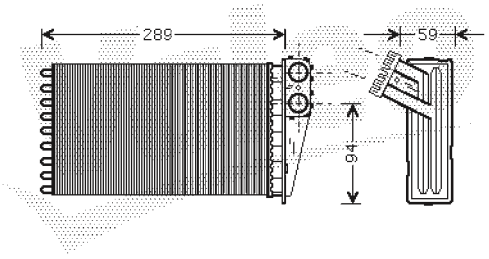

PEUGEOT 6448K3

Valeo 812335 — 182x168x25

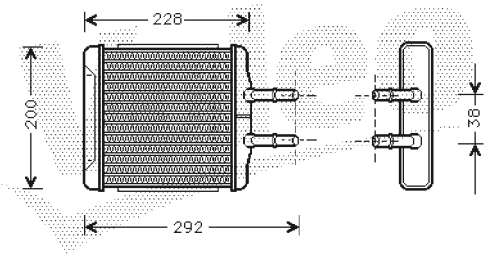

DAEWOO 96231949

Valeo 812339 — 249x130x39

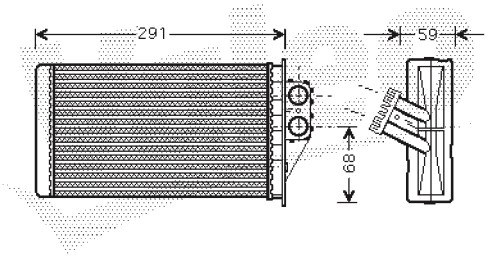

PEUGEOT 6448K4

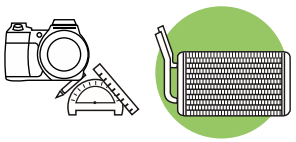

Valeo 812340 — 214x263x25

Picture not available
Image non disponible
Nicht verfügbares Bild
Imagen no disponible
Immagine non disponibile
Zdjęcie niedostępne

IVECO	504026720

Valeo 812341 — 214x263

Picture not available
Image non disponible
Nicht verfügbares Bild
Imagen no disponible
Immagine non disponibile
Zdjęcie niedostępne

IVECO	500344178

Valeo 812342 — 298x160x42

Picture not available
Image non disponible
Nicht verfügbares Bild
Imagen no disponible
Immagine non disponibile
Zdjęcie niedostępne

IVECO	93930678

Valeo 812343 — 380x190x42

Picture not available
Image non disponible
Nicht verfügbares Bild
Imagen no disponible
Immagine non disponibile
Zdjęcie niedostępne

VOLVO TRUCKS	3090893

Valeo 812344 — 370x190x42

Picture not available
Image non disponible
Nicht verfügbares Bild
Imagen no disponible
Immagine non disponibile
Zdjęcie niedostępne

VOLVO TRUCKS	1697358

Valeo 812345 — 370x190x42

Picture not available
Image non disponible
Nicht verfügbares Bild
Imagen no disponible
Immagine non disponibile
Zdjęcie niedostępne

VOLVO TRUCKS	1624373

Valeo 812346 — 365x190x42

Picture not available
Image non disponible
Nicht verfügbares Bild
Imagen no disponible
Immagine non disponibile
Zdjęcie niedostępne

MAN	81619010065

Valeo 812347 — 320x170x42

Picture not available
Image non disponible
Nicht verfügbares Bild
Imagen no disponible
Immagine non disponibile
Zdjęcie niedostępne

MERCEDES	0018359201

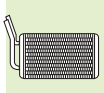

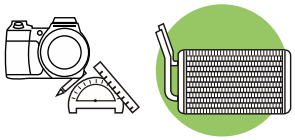

Valeo 812348 — 170x190x40

Picture not available
Image non disponible
Nicht verfügbares Bild
Imagen no disponible
Immagine non disponibile
Zdjęcie niedostępne

MERCEDES 0018358301

Valeo 812349 — 340x227x48

Picture not available
Image non disponible
Nicht verfügbares Bild
Imagen no disponible
Immagine non disponibile
Zdjęcie niedostępne

RENAULT TRUCKS 5000294090

Valeo 812350 — 370x190x42

Picture not available
Image non disponible
Nicht verfügbares Bild
Imagen no disponible
Immagine non disponibile
Zdjęcie niedostępne

MAN 81619010067

Valeo 812351 — 370x190x42

Picture not available
Image non disponible
Nicht verfügbares Bild
Imagen no disponible
Immagine non disponibile
Zdjęcie niedostępne

MAN 81619010064

Valeo 812352 — 370x190x43

Picture not available
Image non disponible
Nicht verfügbares Bild
Imagen no disponible
Immagine non disponibile
Zdjęcie niedostępne

MAN 81619016166

Valeo 812353 — 370x227x60

Picture not available
Image non disponible
Nicht verfügbares Bild
Imagen no disponible
Immagine non disponibile
Zdjęcie niedostępne

MERCEDES 0008356601

Valeo 812354 — 390x225x39

Picture not available
Image non disponible
Nicht verfügbares Bild
Imagen no disponible
Immagine non disponibile
Zdjęcie niedostępne

MERCEDES 0028356801

Valeo 812355 — 420x158x38

Picture not available
Image non disponible
Nicht verfügbares Bild
Imagen no disponible
Immagine non disponibile
Zdjęcie niedostępne

RENAULT-IRISBUS 5010104657

Valeo 812356 — 360x170x42

Picture not available
Image non disponible
Nicht verfügbares Bild
Imagen no disponible
Immagine non disponibile
Zdjęcie niedostępne

MERCEDES	0028350801

Valeo 812357 — 360x170x48

Picture not available
Image non disponible
Nicht verfügbares Bild
Imagen no disponible
Immagine non disponibile
Zdjęcie niedostępne

MERCEDES	0028350901

Valeo 812358 — 290x158x32

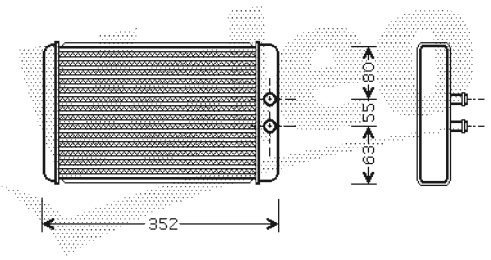

CITROËN	6448H8
FIAT	46722710
PEUGEOT	6448H8

Valeo 812360 — 205x145x32

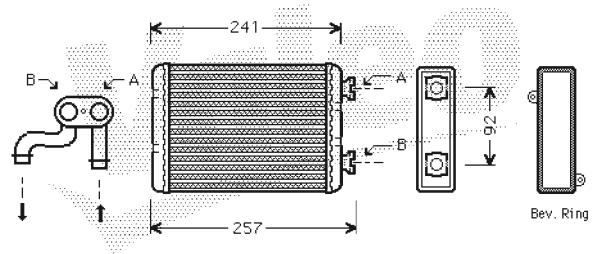

BMW	64118373786

Valeo 812361 — 171x149x52

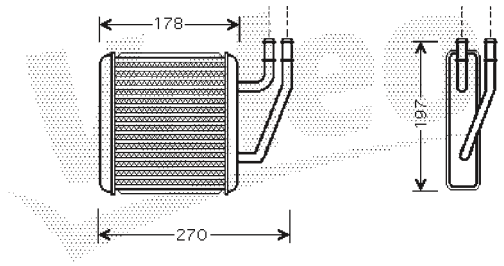

FORD	7204831

Valeo 812362 — 268x135x32

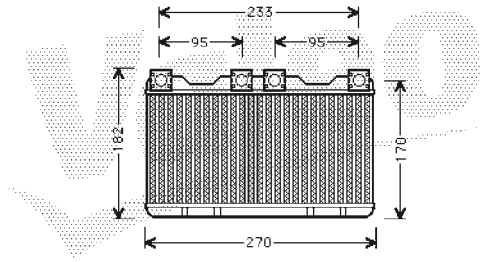

BMW	64118373175

Valeo 812363 — 180x165x32

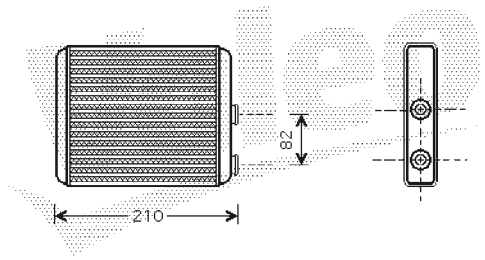

OPEL	1618288
VAUXHALL	93175260

Valeo 812364 — 247x146x48

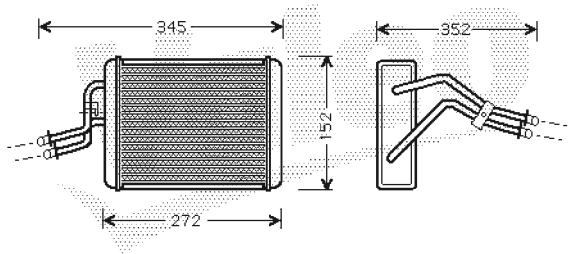

FORD	4166487

812365 — 261x180x26

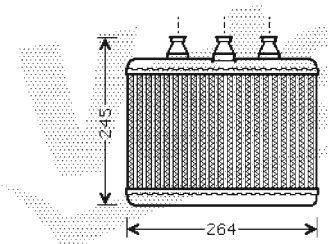

BMW	64116906270

812375 — 265x149

NISSAN	7701473279
OPEL	4409453
RENAULT	7701473279
VAUXHALL	91158692

812366 — 239x189x40

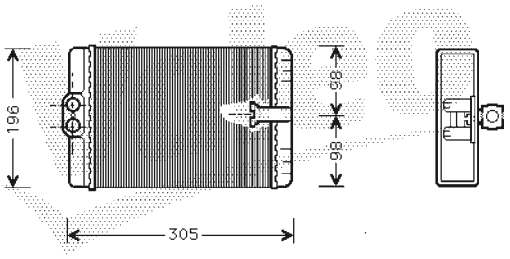

MERCEDES	2208300261

812378 — 245x158x42

PEUGEOT	6448P9

812373 — 175x169x35

Picture not available
Image non disponible
Nicht verfügbares Bild
Imagen no disponible
Immagine non disponibile
Zdjęcie niedostępne

RENAULT	7701208766

812382

MINI	64113422666

812374 — 170x158x42

DACIA	6001547484

812395 — 250x180x33

Picture not available
Image non disponible
Nicht verfügbares Bild
Imagen no disponible
Immagine non disponibile
Zdjęcie niedostępne

FIAT	9464420380
LANCIA	9464420380

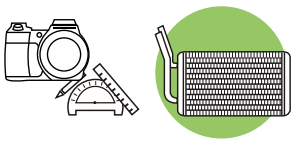

Valeo 812396 — 172x170x26

HYUNDAI	9712302000

Valeo 812409 — 195x170x30

HYUNDAI	9722122000
HYUNDAI	9722122001

Valeo 812399 — 234x138x42

Picture not available
Image non disponible
Nicht verfügbares Bild
Imagen no disponible
Immagine non disponibile
Zdjęcie niedostępne

PEUGEOT	644851

Valeo 812410 — 169x162x22

KIA	0K30C61A10

Valeo 812400 — 280x160x42

ALFA ROMEO	46721527
LANCIA	60815099

Valeo 812411 — 185x163x29

KIA	0K55261H01

Valeo 812401 — 256x210x27

BMW	64119128953

Valeo 812412 — 185x163x22

KIA	0K55261H01A

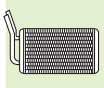

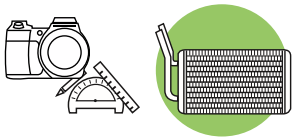

Valeo

Valeo 812413

RENAULT 271159831R

Valeo 812424

PEUGEOT 6448W9

Valeo 812416

PEUGEOT 6448S4

Valeo 812426

ALFA ROMEO 77365588

Valeo 812417

PEUGEOT 6448V6

Valeo 812430 285x215

HYUNDAI 971381H500
KIA 971381H500

Valeo 812423

RENAULT 7701209524

Valeo 812431 210x155x20

Picture not available
Image non disponible
Nicht verfügbares Bild
Imagen no disponible
Immagine non disponibile
Zdjęcie niedostępne

HYUNDAI 9713817000

Valeo 812436 — 175x150x20

KIA — 9713807000

Valeo 812442 — 195x150x25

DAEWOO — 96539642

Valeo 812438 — 200x165x25

KIA — 9713807400

Valeo 812444 — 285x150x20

Picture not available
Image non disponible
Nicht verfügbares Bild
Imagen no disponible
Immagine non disponibile
Zdjęcie niedostępne

KIA — 971384D050

Valeo 812440

Picture not available
Image non disponible
Nicht verfügbares Bild
Imagen no disponible
Immagine non disponibile
Zdjęcie niedostępne

HYUNDAI — 971382E150

Valeo 818205

Picture not available
Image non disponible
Nicht verfügbares Bild
Imagen no disponible
Immagine non disponibile
Zdjęcie niedostępne

MERCEDES — 1698300761

Valeo 812441 — 275x200

HYUNDAI — 971382L000

Valeo 881769 — 194x140x42

ROVER — 37H7216

Valeo 883468 — 200x175x42

T49

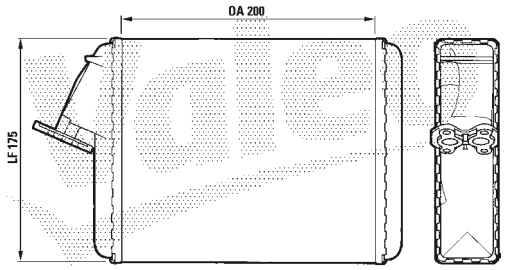

CITROËN 75515461

Valeo 883739 — 234x175x42

T58

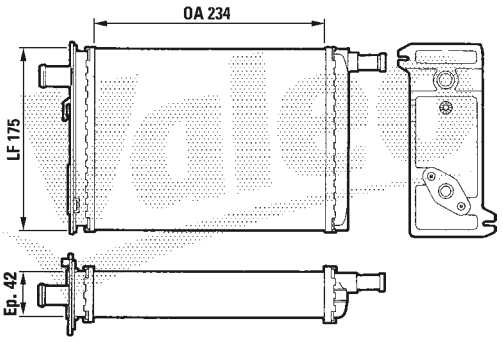

RENAULT 7704000112

Valeo 883520 — 193x172x42

T54

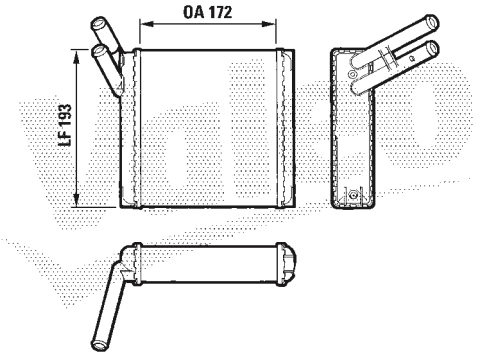

CITROËN 75513460

Valeo 883790 — 212x156x42

T284

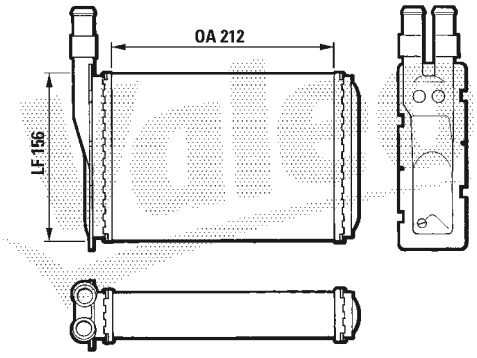

RENAULT 7701027078

Valeo 883674 — 250x156x42

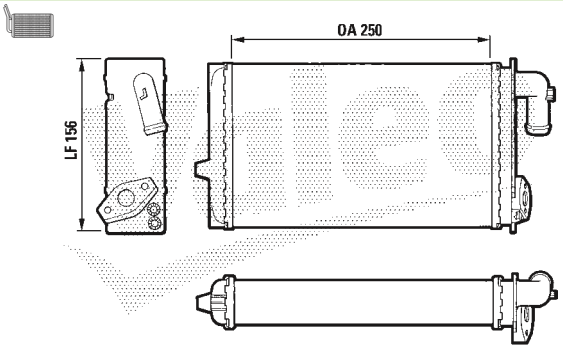

PEUGEOT 644854

Valeo 883965 — 234x138x42

T277

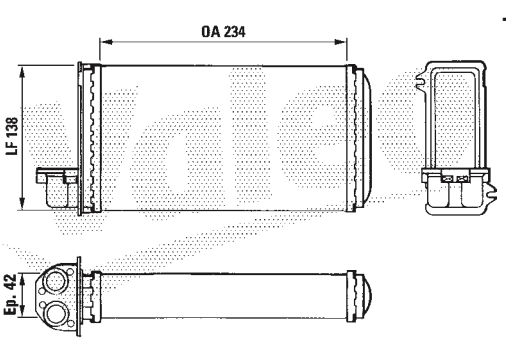

PEUGEOT 644851
PEUGEOT 6448G2

Valeo 883737 — 193x150x42

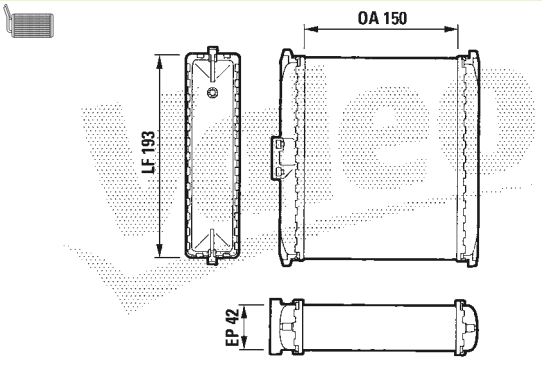

PEUGEOT 644855

Valeo 883976 — 250x157x42

T272

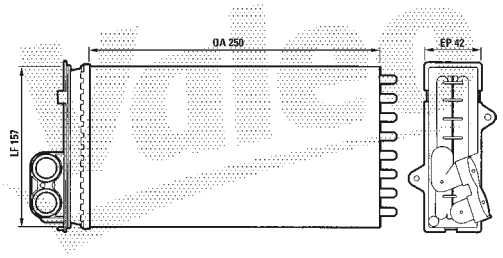

PEUGEOT 644877

Valeo 883982 276x184x42

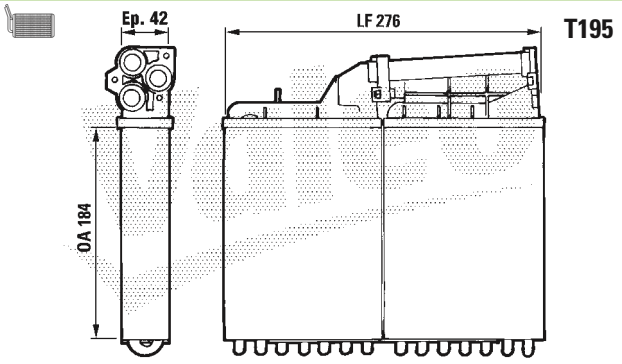

T195

BMW 64111384725

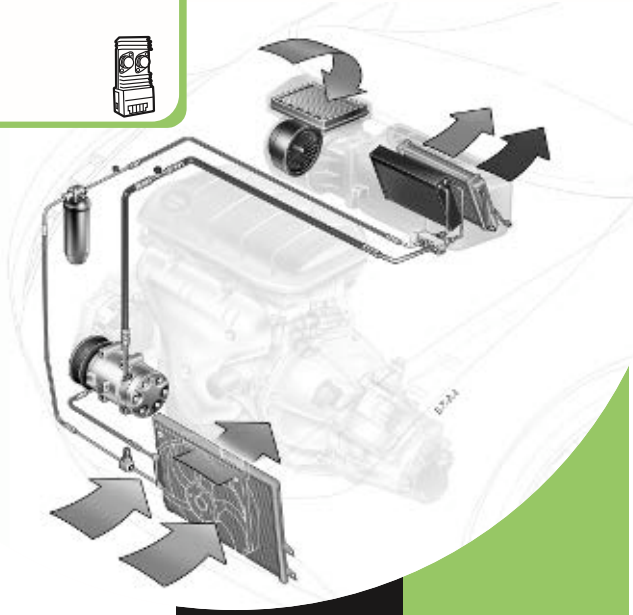

CONTROL ELECTRONICS
ÉLECTRONIQUE DE CONTRÔLE
STEUERELEKTRONIK
ELECTRÓNICA DE CONTROL
ELECTRÓNICA DE CONTROLE
ELETTRONICA DI CONTROLLO
ELECTRONISCHE COMPONENTEN
MODUż ELEKTRONICZNY
ЗЛЕКТРОНЫ БЛОК УПРАВЛЕНИЯ
REGULAČNŽELEKTRONIKA
ELEMENT ELECTRONIC DE CONTROL
ELEKTRONIK KONTROL
Ηλεκτρονική μονάδα ελέγχου

4.8

	A/C				OE	Valeo
ALFA ROMEO						
Giulietta				06/10 ▸	77365570	**515077**
AUDI						
A3 (2003>2008)	A+			05/03 ▸	3C0907521F	**515135**
A3 (2003>2008)	+			05/03 ▸	1K0959263A	**515074**
A3 (2008>)	+			07/08 ▸	1K0959263A	**515074**
A3 Cabriolet (2008>)	+/-			04/08 ▸ 05/10	1K0959263A	**515074**
S3 (2006>)	+			10/06 ▸	1K0959263A	**515074**
BMW						
1 series E87	+/-		BLOWER SPEED REGULATOR	09/04 ▸ 01/07	64116927090	**509783**
1 series E81	+/-		BLOWER SPEED REGULATOR	01/07 ▸	64116927090	**509783**
3 series E90/E91/E92	+/-		BLOWER SPEED REGULATOR	03/05 ▸	64116927090	**509783**
5 series E39	A+		BLOWER SPEED REGULATOR	09/95 ▸ 04/04	64116923204	**509505**
X5 E53	A+		BLOWER SPEED REGULATOR	01/00 ▸	64116923204	**509505**
X6 E71	A+		BLOWER SPEED REGULATOR	05/08 ▸	64119222072	**509783**
CITROËN						
AX (91>98)	+		BLOWER SPEED REGULATOR	05/91 ▸ 07/98	644178	**698032**
C2	-		RESISTANCE	09/03 ▸	6441Q7	**509509**
C2	A+		BLOWER SPEED REGULATOR	09/03 ▸	6441L2	**509355**
C2	M+		RESISTANCE	09/03 ▸	6441Q8	**509510**
C3	-		RESISTANCE	04/02 ▸	6441Q7	**509509**
C3	A+		BLOWER SPEED REGULATOR	04/02 ▸	6441L2	**509355**
C3	M+		RESISTANCE	04/02 ▸	6441Q8	**509510**
C5 (2001>2004)	-		RESISTANCE	02/01 ▸ 08/04	6441N8	**509351**
C5 (2001>2004)	A+		BLOWER SPEED REGULATOR	02/01 ▸ 08/04	6441L2	**509355**
C5 (2001>2004)	M+		RESISTANCE	02/01 ▸ 08/04	6441N8	**509351**
C5 (2004>)	A+		BLOWER SPEED REGULATOR	09/04 ▸	6441L2	**509355**
C5 (2004>)	M+		RESISTANCE	09/04 ▸	6441T6	**509351**
Saxo	+		BLOWER SPEED REGULATOR	03/96 ▸	644178	**698032**
Xantia	+		BLOWER SPEED REGULATOR	03/93 ▸ 05/02	644178	**698032**
Xsara Picasso	+		BLOWER SPEED REGULATOR	12/99 ▸ 12/05	644178	**698032**
XM (89>2001)	+		BLOWER SPEED REGULATOR	05/89 ▸ 07/01	644178	**698032**
Xsara	+		BLOWER SPEED REGULATOR	07/97 ▸ 08/05	644178	**698032**
Xsara Picasso	+		BLOWER SPEED REGULATOR	12/99 ▸	644178	**698032**
ZX	+		BLOWER SPEED REGULATOR	03/91 ▸ 07/98	644178	**698032**

• **New** Nouveau **Neu** Nuevo **Novo** Nuovo **Nieuw** Nowi **Новый** Novy **Nou** Yeni **Νέους**

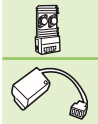

	A/C				OE	Valeo
CITROËN						
Berlingo (96>2002)	-		RESISTANCE	10/99 ▸ 11/02	6450GV	**515082**
Berlingo (96>2002)	+		BLOWER SPEED REGULATOR	07/96 ▸ 11/02	644178	**698032**
Berlingo (2002>)	-		RESISTANCE	12/02 ▸	6450GV	**515082**
Berlingo (2002>)	+		RESISTANCE	12/02 ▸	6450NV	**515079**
Berlingo (2002>)	+		BLOWER SPEED REGULATOR	12/02 ▸ 09/05	644178	**698032**
DACIA						
Duster (2010>)	+		RESISTANCE	03/10 ▸	6001547488	**509898**
Logan	+		RESISTANCE	09/04 ▸	6001547488	**509898**
Sandero	+/-		RESISTANCE	06/08 ▸	6001547488	**509898**
FIAT						
Punto (93>99)	-		BLOWER SPEED REGULATOR	07/93 ▸ 09/99	5893939	**508869**
Punto II (99>2003)	+		RESISTANCE	07/99 ▸ 06/03	46770818	**509344**
HONDA						
Civic V (MA/MB) (95>2001)	+		RESISTANCE	01/95 ▸ 03/01	79330ST3E01	**509650**
LAND ROVER						
Freelander (97>2003)	+/-			10/97 ▸ 12/00	JGM100110	**515088**
Freelander (97>2003)	+/-			01/01 ▸ 09/03	JGM500010	**515096**
New Freelander	+/-			09/03 ▸	JGM500010	**515096**
Range Rover (2002>2009)	+/-			03/02 ▸ 06/09	JGO000021	**509505**
MERCEDES						
A Class (168) (97>2003)	+/-			03/01 ▸ 06/04	1688200897	**515075**
A Class (169) (2004>)	A+		BLOWER SPEED REGULATOR	07/04 ▸	1698200297	**509869**
B Class (245)	A+		BLOWER SPEED REGULATOR	03/05 ▸	1698200297	**509869**
E Class (210)	+		BLOWER SPEED REGULATOR	04/95 ▸ 03/03	2108211651	**509361**
V Class (638/2)	+/-		RESISTANCE	10/96 ▸ 12/02	0018212560	**515080**
MERCEDES						
Sprinter			RESISTANCE	02/95 ▸	0018211360	**515076**
Vito (96>2003)	+/-		RESISTANCE	01/96 ▸ 09/03	0018212560	**515080**
MG						
MG ZS	+			07/01 ▸	JGH10002	**509650**

• **New** Nouveau **Neu** Nuevo **Novo** Nuovo **Nieuw** Nowi **Новый** Novy **Nou** Yeni **Νέους**

	A/C				OE	Valeo
NISSAN						
Micra (K12) (2003>)	-		RESISTANCE	01/03 ▸	27150AX115	**509600**
Micra (K12) (2003>)	+		BLOWER SPEED REGULATOR	01/03 ▸	27150AX015	**509599**
Note (2008>)	+		RESISTANCE	01/08 ▸	27150AX115	**509600**
NISSAN						
Primastar	+			09/02 ▸	7701050325	**509900**
Primastar	M+			09/02 ▸	7701208226	**509899**
OPEL						
Astra F (91>98)	+		RESISTANCE 4 levels	09/91 ▸ 01/98	1845790	**509732**
Astra F (91>98)	-		RESISTANCE 3 levels	09/91 ▸ 01/98	1845786	**509730**
Astra F (91>98)	+		RESISTANCE 4 levels	09/91 ▸ 01/98	1845785	**509731**
Calibra	+		RESISTANCE 4 levels	06/90 ▸ 07/97	1845790	**509732**
Calibra	+		RESISTANCE 4 levels	09/91 ▸ 01/98	1845785	**509731**
Corsa	+/-		RESISTANCE	03/93 ▸ 08/03	1845781	**509405**
Omega A (86>94)	+/-		RESISTANCE	09/86 ▸ 03/94	1808431	**509729**
Senator B (87>93)	+/-		RESISTANCE	09/87 ▸ 09/93	1808431	**509729**
Vectra A (88>95)	+		RESISTANCE 4 levels	09/88 ▸ 11/95	1845790	**509732**
Vectra A (88>95)	+		RESISTANCE 4 levels	09/91 ▸ 11/95	1845785	**509731**
OPEL						
Vivaro	+			05/01 ▸	4409452	**509900**
Vivaro	M+			05/01 ▸	4413393	**509899**
PEUGEOT						
1007	M+		RESISTANCE	04/05 ▸	6441Q8	**509510**
1007	A+		BLOWER SPEED REGULATOR	04/05 ▸	6441L2	**509355**
1007	-		RESISTANCE	04/05 ▸	6441Q7	**509509**
106	+		BLOWER SPEED REGULATOR	09/91 ▸ 07/03	644178	**698032**
207	-		BLOWER SPEED REGULATOR	03/06 ▸	6441V8	**509913**
207	M+		BLOWER SPEED REGULATOR	03/06 ▸	6441V8	**509913**
207	A+		BLOWER SPEED REGULATOR	03/06 ▸ 02/07	6441L2	**509355**
207 11081 ▸	A+		BLOWER SPEED REGULATOR	03/07 ▸	6441AF	**509918**
208	A+		BLOWER SPEED REGULATOR	03/12 ▸	6441AF	**509918**
308	M+		BLOWER SPEED REGULATOR	09/07 ▸	644179	**509288**
308	A+			09/07 ▸	6441AA	**515038**
308	M+			09/07 ▸	6441Z9	**515039**
405 (87>92)	+		BLOWER SPEED REGULATOR	06/87 ▸ 06/92	644179	**509288**

• **New** Nouveau **Neu** Nuevo **Novo** Nuovo **Nieuw** Nowi **Новый** Novy **Nou** Yeni **Νέους**

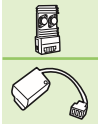

	A/C				OE	Valeo
PEUGEOT (.../...)						
405	+		BLOWER SPEED REGULATOR	06/87 ▸ 10/96	644178	**698032**
406 (99>)	M+		BLOWER SPEED REGULATOR	04/99 ▸ 03/04	6441L1	**509885**
406	+		BLOWER SPEED REGULATOR	10/95 ▸ 04/04	644178	**698032**
406 Coupe (97>)	+		BLOWER SPEED REGULATOR	05/97 ▸	644178	**698032**
508	+			02/11 ▸	6441FB	**515071**
508	+		REAR BLOWER	02/11 ▸	1606222380	**515072**
605 (89>99) ▸ 91023499	+		RESISTANCE	10/89 ▸	6441Q8	**509510**
605	-		BLOWER SPEED REGULATOR	10/89 ▸ 05/99	644178	**698032**
607 (2000>2004) ▸ 8985	+		BLOWER SPEED REGULATOR	05/00 ▸ 06/01	6441L2	**509355**
PEUGEOT						
Partner (96>2002)	+		BLOWER SPEED REGULATOR	07/96 ▸ 11/02	644178	**698032**
Partner (96>2002)	-		RESISTANCE	05/00 ▸ 11/02	6450GV	**515082**
Partner (2002>)	+		BLOWER SPEED REGULATOR	12/02 ▸ 09/05	644178	**698032**
Partner (2002>)	-		RESISTANCE	12/02 ▸	6450GV	**515082**
Partner (2002>)	+		RESISTANCE	12/02 ▸	6450NV	**515079**
Ranch (96>2002)	-		RESISTANCE	01/01 ▸ 11/02	6450GV	**515082**
Ranch (96>2002)	+		BLOWER SPEED REGULATOR	06/96 ▸ 11/02	644178	**698032**
Ranch (2002>)	-		RESISTANCE	12/02 ▸	6450GV	**515082**
Ranch (2002>)	+		RESISTANCE	12/02 ▸	6450NV	**515079**
RENAULT						
R19	+		BLOWER SPEED REGULATOR	07/88 ▸ 11/95	7701033535	**508588**
R21	+/-		BLOWER SPEED REGULATOR	03/86 ▸ 08/95	7701033535	**508588**
Clio (90>98)	-		RESISTANCE	06/90 ▸ 02/98	7701034874	**509281**
Clio II (98>2001)	M+			03/98 ▸ 03/01	7701206104	**•515136**
Clio II (2001>)	+		RESISTANCE	04/01 ▸	7701050900	**509886**
Clio II (2001>)	+		BLOWER SPEED REGULATOR	04/01 ▸	7701051272	**509921**
Clio II (2001>)	M+			04/01 ▸ 06/01	7701050890	**515086**
Clio III (2005>)	+/-		RESISTANCE	09/05 ▸	7701209803	**515081**
Clio III (2005>)	A+		BLOWER SPEED REGULATOR	09/05 ▸ 08/07	7701207718	**509355**
Clio III (2005>)	A+		BLOWER SPEED REGULATOR	09/07 ▸	7701209850	**509961**
Lutecia (Jap)	-		RESISTANCE	10/94 ▸ 02/98	7701034874	**509281**
Mégane (95>99)	-		RESISTANCE	11/95 ▸ 04/98	7701040542	**509282**
Mégane (95>99)	+		BLOWER SPEED REGULATOR	11/95 ▸ 04/98	7701040562	**509283**
Mégane (95>99)	+			11/95 ▸ 02/99	7701046061	**515089**
Mégane (98>2003)	+			10/98 ▸ 09/99	7701046061	**515089**

• **New** Nouveau **Neu** Nuevo **Novo** Nuovo **Nieuw** Nowi **Новый** Nowy **Nou** Yeni **Νέους**

	A/C				OE	Valeo
RENAULT (.../...)						
Mégane II (2002>2009)	A+		BLOWER SPEED REGULATOR	09/02 ▸	7701207718	**509355**
Mégane II (2002>2009)	M+		RESISTANCE	09/02 ▸	7701207717	**509536**
Mégane III (2008>)	+		BLOWER SPEED REGULATOR	10/08 ▸	7701209850	**509961**
Mégane Classic (96>99)	+			09/96 ▸ 02/99	7701046061	**515089**
Mégane Classic (99>2002)	+			03/99 ▸ 09/99	7701046061	**515089**
Mégane Classic (99>2002)	M+			01/00 ▸ 08/02	7701048356	•**515137**
Mégane Scénic (96>99)	-			09/98 ▸ 09/99	7701046957	**515087**
Mégane Scénic (96>99)	+		BLOWER SPEED REGULATOR	10/96 ▸ 09/98	7701040562	**509283**
Mégane Scénic (96>99)	+			09/98 ▸ 09/99	7701046943	**515084**
Mégane Scénic (96>99) 980320 ▸ 980914	A+		BLOWER SPEED REGULATOR	03/98 ▸ 09/98	7701045870	**509885**
Mégane Scénic (99>2003)	A+		BLOWER SPEED REGULATOR	09/99 ▸ 04/03	7701048390	**509355**
Mégane Scénic (96>99) 980914 ▸	+/-			09/98 ▸ 09/99	7701046941	**515083**
Modus (2008>)	+/-			01/08 ▸	7701209803	**515081**
Safrane	-		BLOWER SPEED REGULATOR	05/92 ▸ 11/00	7701035894	**509280**
Scénic II	A+		BLOWER SPEED REGULATOR	05/03 ▸	7701207718	**509355**
Scénic II	M+		RESISTANCE	05/03 ▸	7701207876	**509638**
Scénic III	A+			04/09 ▸	7701209850	**509961**
Thalia (2001>2008)	+			01/01 ▸	7701051272	**509921**
Twingo III (2007>)	-			07/07 ▸	7701067951	**509914**
Twingo III (2007>)	+			07/07 ▸	7701209850	**509917**
Twingo III (2007>)	A+			07/07 ▸	7701207718	**509355**
Twingo III (2007>)	M+			07/07 ▸	7701067951	**509914**
RENAULT						
Kangoo (97>2003)	M+			01/00 ▸ 08/02	7701048356	•**515137**
Master (97>2003)	+		BLOWER SPEED REGULATOR	09/97 ▸ 09/03	7701033535	**508588**
Master (97>2003) 991022 ▸	+		BLOWER SPEED REGULATOR	10/99 ▸ 09/03	7701045870	**509885**
Master (2003>2006)	+		BLOWER SPEED REGULATOR	10/03 ▸ 06/06	7701045870	**509885**
Master (2006>)			RESISTANCE	06/06 ▸	7701050738	**515069**
Trafic (2001>)	+			04/01 ▸	7701050325	**509900**
Trafic (2001>)	M+			04/01 ▸	7701208226	**509899**
ROVER						
25	+/-		RESISTANCE	12/99 ▸	JGH10002	**509650**
400	+/-			05/95 ▸ 03/00	JGH10002	**509650**
SAAB						
900 (93>)	+		RESISTANCE 4 levels	07/93 ▸ 02/98	4758272	**509732**

• **New** Nouveau **Neu** Nuevo **Novo** Nuovo **Nieuw** Nowi **Новый** Novy **Nou** Yeni **Νέους**

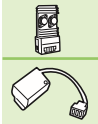

	A/C				OE	Valeo
SAAB (.../...)						
9-3 (98>2002)	+		RESISTANCE 4 levels	04/98 ▸ 05/03	4758272	**509732**
9-3 (2002>)	+		RESISTANCE	09/02 ▸	9180020	**509894**
9-3 (2002>)	+		BLOWER SPEED REGULATOR	09/02 ▸	9180208	**509896**
SEAT						
Altea (2004>2009)	A+			03/04 ▸	3C0907521F	**515135**
Altea (2004>2009)	+			03/04 ▸	1K0959263A	**515074**
Leon II (2005>2010)	A+			07/05 ▸	3C0907521F	**515135**
Leon II (2005>2010)	+/-			07/05 ▸	1K0959263A	**515074**
Toledo (2004>)	A+			09/04 ▸	3C0907521F	**515135**
Toledo (2004>)	+/-			09/04 ▸	1K0959263A	**515074**
SKODA						
Octavia (2004>)	A+			05/04 ▸	3C0907521F	**515135**
Octavia (2004>2008)	+			05/04 ▸ 10/08	1K0959263A	**515074**
Superb II (2008>)	+			03/08 ▸	1K0959263A	**515074**
VAUXHALL						
Astra III (91>98)	+		RESISTANCE 4 levels	09/91 ▸ 02/98	90450998	**509732**
Astra III (91>98)	-		RESISTANCE 3 levels	09/91 ▸ 01/98	90421995	**509730**
Astra III (91>98)	+		RESISTANCE 4 levels	09/91 ▸ 01/98	90228759	**509731**
Calibra	+		RESISTANCE 4 levels	06/90 ▸ 07/97	90450998	**509732**
Calibra	+		RESISTANCE 4 levels	09/91 ▸ 01/98	90228759	**509731**
Carlton	+/-		RESISTANCE	09/86 ▸ 03/94	90295325	**509729**
Cavalier III (88>95)	+		RESISTANCE 4 levels	09/88 ▸ 11/95	90450998	**509732**
Cavalier III (88>95)	+		RESISTANCE 4 levels	09/91 ▸ 01/98	90228759	**509731**
Corsa	+/-		RESISTANCE	04/93 ▸ 08/03	90535076	**509405**
Senator B (87>93)	+/-		RESISTANCE	09/87 ▸ 09/93	90295325	**509729**
VAUXHALL						
Vivaro	M+			08/01 ▸	93161217	**509899**
Vivaro	+			08/01 ▸	91158691	**509900**
VOLKSWAGEN						
Eos	A+			05/06 ▸	3C0907521F	**515135**
Eos (2006>2010)	+			05/06 ▸ 11/10	1K0959263A	**515074**
Golf V (2003>2008)	A+			10/03 ▸ 09/08	3C0907521F	**515135**
Golf V (2003>)	+/-			10/03 ▸	1K0959263A	**515074**

• **New** Nouveau **Neu** Nuevo **Novo** Nuovo **Nieuw** Nowi **Новый** Nowy **Nou** Yeni **Νέους**

	A/C				OE	Valeo
VOLKSWAGEN (.../...)						
Golf V Plus (2005>)	+/-			01/05 ▸	1K0959263A	**515074**
Golf Plus (2005>)	A+			01/05 ▸	3C0907521F	**515135**
Golf VI (2008>)	+			10/08 ▸	1K0959263A	**515074**
Golf VI Plus (2009>)				01/09 ▸	1K0959263A	**515074**
Jetta (2005>)	A+			08/05 ▸	3C0907521F	**515135**
Jetta (2005>2010)	+			08/05 ▸	1K0959263A	**515074**
Passat (2005>2010)	+			03/05 ▸	1K0959263A	**515074**
Passat (2005>)	+			05/07 ▸	3C0907521F	**515135**
Passat CC	+			05/08 ▸ 11/10	1K0959263A	**515074**
Scirocco (2008>)	+/-			08/08 ▸	1K0959263A	**515074**
Tiguan	+			11/07 ▸	1K0959263A	**515074**
Touran	A+			02/03 ▸	3C0907521F	**515135**
Touran (2003>2006)	+/-			02/03 ▸ 11/06	1K0959263A	**515074**
Touran (2006>2010)	+/-			11/06 ▸ 05/10	1K0959263A	**515074**
VOLKSWAGEN						
Caddy (2004>2010)	+			02/04 ▸ 08/10	1K0959263A	**515074**

• **New** Nouveau **Neu** Nuevo **Novo** Nuovo **Nieuw** Nowi **Новый** Novy **Nou** Yeni **Νέους**

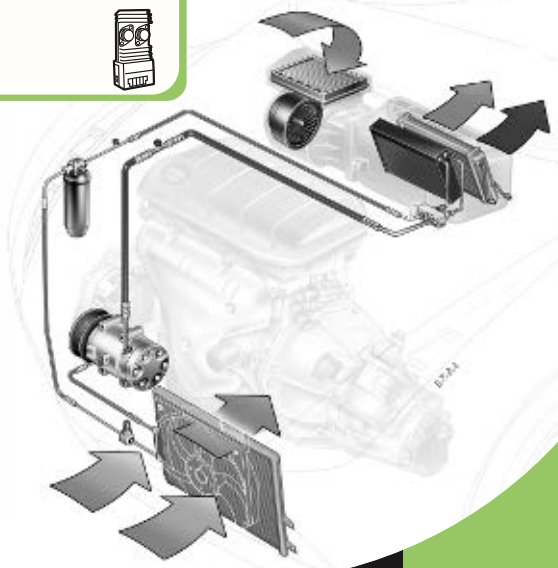

CONTROL ELECTRONICS
ÉLECTRONIQUE DE CONTRÔLE
STEUERELEKTRONIK
ELECTRÓNICA DE CONTROL
ELECTRÓNICA DE CONTROLE
ELETTRONICA DI CONTROLLO
ELECTRONISCHE COMPONENTEN
MODUż ELEKTRONICZNY
ЗЛЕКТРОНЫ БЛОК УПРАВЛЕНИЯ
REGULAČNŽELEKTRONIKA
ELEMENT ELECTRONIC DE CONTROL
ELEKTRONIK KONTROL
Ηλεκτρονική μονάδα ελέγχου

TECH.COD. Valeo

CT	Valeo	
VALEO		
006638HV	**509894**	
006962RV	**509896**	
532953339V	**509505**	
532987941V	**509361**	
651409R	**509282**	
652873N	**509283**	
833630B	**509288**	
833745N	**509281**	
833817E	**509280**	
846413T	**508588**	
982488SV	**509869**	
985464FV	**509783**	
F509351F	**509351**	
F509355V	**509355**	
F661296D	**515136**	
F663855K	**515137**	
F664462J	**509509**	
F664463F	**509510**	
F666136V	**509536**	
F667812P	**509650**	
F964602C	**509900**	
N100865D	**509599**	
N100866E	**509600**	
N100882L	**509638**	
N100967V	**509899**	

CT	Valeo	

CT	Valeo	

Valeo 508588

846413T

RENAULT 7701033535

Valeo 508869

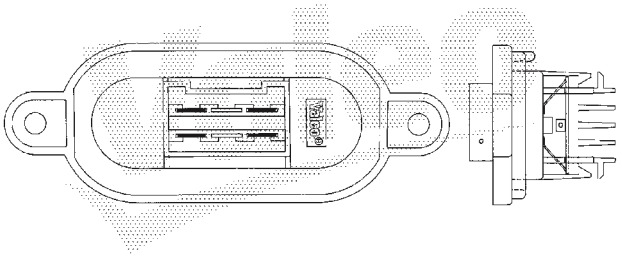

FIAT 5893939

Valeo 509280

833817E

RENAULT 7701035894

Valeo 509281

833745N

RENAULT 7701034874

Valeo 509282

651409R

RENAULT 7701040542

Valeo 509283

652873N

RENAULT 7701040562

Valeo 509288

833630B

PEUGEOT 644179

Valeo 509344

FIAT 46770818

Valeo 509351

F509351F

CITROËN	6441N8

Valeo 509355

F509355V

CITROËN	6441L2
PEUGEOT	6441L2
RENAULT	7701048390
RENAULT	7701207718

Valeo 509361

532987941V

MERCEDES	2108211651

Valeo 509405

OPEL	1845781
VAUXHALL	90535076

Valeo 509505

532953339V

BMW	64116923204

Valeo 509509

F664462J

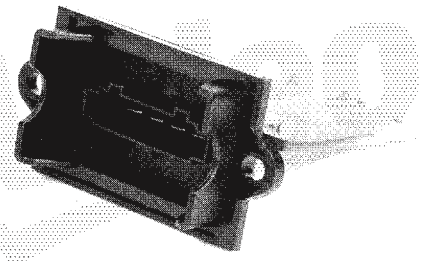

CITROËN	6441Q7

Valeo 509510

F664463F

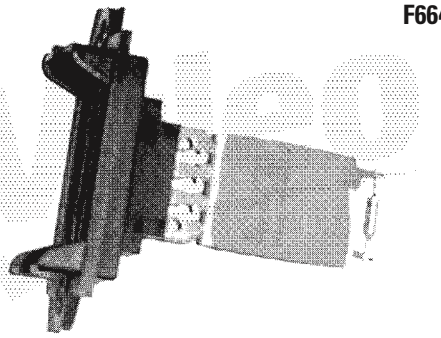

CITROËN	6441Q8
PEUGEOT	6441Q8

Valeo 509536

F666136V

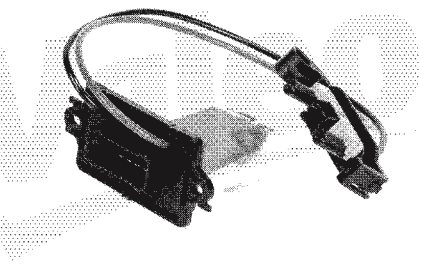

RENAULT	7701207717

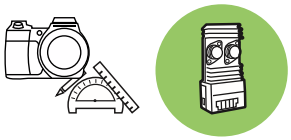

Valeo 509599

N100865D

NISSAN	27150AX015

Valeo 509600

N100866E

NISSAN	27150AX115

Valeo 509638

N100882L

RENAULT	7701207876

Valeo 509650

F667812P

HONDA	79330ST3E01
ROVER	JGM10002

Valeo 509729

OPEL	1808431
VAUXHALL	90295325

Valeo 509730

OPEL	1845786
VAUXHALL	90421995

Valeo 509731

OPEL	1845785
VAUXHALL	90228759

Valeo 509732

OPEL	1845790
SAAB	4758272
VAUXHALL	90450998

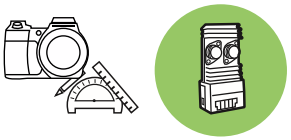

Valeo 509783

985464FV

BMW	64116927090

Valeo 509894

SAAB	9180020

Valeo 509869

MERCEDES	1698200297

Valeo 509896

006962RV

SAAB	9180208

Valeo 509885

PEUGEOT	6441L1
RENAULT	7701045870

Valeo 509898

DACIA	6001547488

Valeo 509886

RENAULT	7701050900

Valeo 509899

NISSAN	7701208226
OPEL	4413393
RENAULT	7701208226
VAUXHALL	93161217

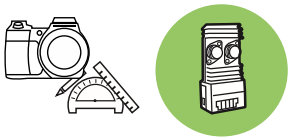

Valeo 509900

NISSAN	7701050325
OPEL	4409452
RENAULT	7701050325
VAUXHALL	91158691

Valeo 509921

Picture not available
Image non disponible
Nicht verfügbares Bild
Imagen no disponible
Immagine non disponibile
Zdjęcie niedostępne

RENAULT	7701051272

Valeo 509913

PEUGEOT	6441V8

Valeo 509961

RENAULT	7701209850

Valeo 509914

RENAULT	7701067951

Valeo 515038

PEUGEOT	6441AA

Valeo 509918

PEUGEOT	6441AF

Valeo 515039

PEUGEOT	6441Z9

Valeo 515079

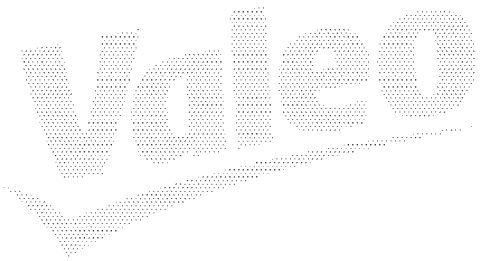

CITROËN	6450NV
PEUGEOT	6450NV

Valeo 515080

MERCEDES	0018212560

Valeo 515081

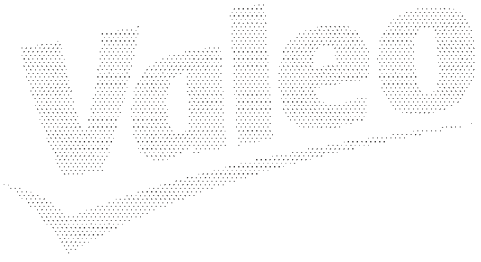

RENAULT	7701209803

Valeo 515082

CITROËN	6450GV
PEUGEOT	6450GV

Valeo 515083

RENAULT	7701046941

Valeo 515088

LAND ROVER	JGM100110

Valeo 515096

LAND ROVER	JGM500010

Valeo 515136

RENAULT	7701206104

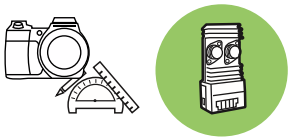

Valeo 515137

RENAULT	7701048356

Valeo 698032

CITROËN	644178
PEUGEOT	644178

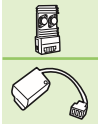

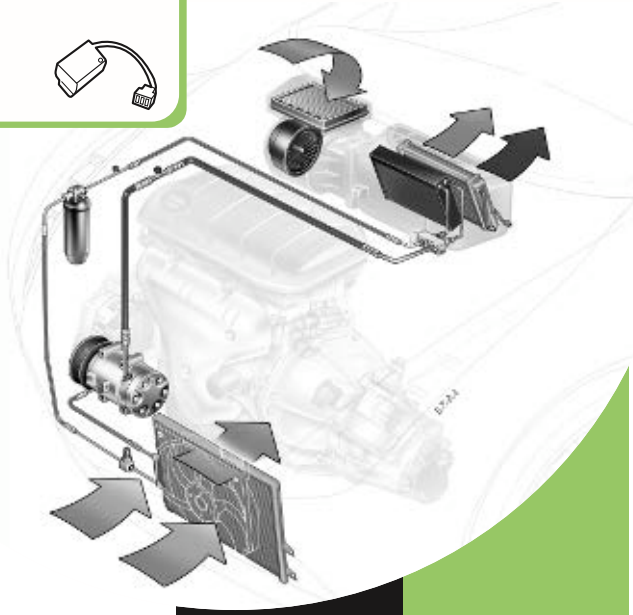

ACTUATOR
ACTIONNEUR
STELLEINHEIT
ACCIONADOR
ATUADOR
ATTUATORE
BESTURINGSMOTOR
SILNIK KROKOWY
ЗЛЕКТРИЧЕСКИЙ ДВИГАТЕЛЬ
OVL DAČ
MECANISM DE ACTIONARE
H REKETLENDIRICI
Ενεργοποιητής

4.9

	A/C				OE	Valeo
ALFA ROMEO						
Giulietta (2010>)				06/10 ▸	77365572	**515128**
AUDI						
A3 (96>2003)	+		BIP/	09/96 ▸ 06/03	1J1907511C	**509573**
A3 (96>2003)	A+		BIP/	09/96 ▸ 06/03	1J1907511A	**509572**
A3 (2003>2008)	M+			05/03 ▸ 06/08	1K1907511C	**515064**
A3 (2003>2008)	A+			05/03 ▸ 06/08	1K0907511B	**515065**
A3 (2003>2008)	+/-			09/04 ▸ 06/08	1K0907511C	**515127**
A3 (2008>)	+/-			07/08 ▸	1K0907511C	**515127**
A3 (2008>)	M+			07/08 ▸	1K1907511C	**515064**
S3 (2006>)				10/06 ▸	1K0907511C	**515127**
TT	+		BIP/	10/98 ▸	1J1907511A	**509572**
TT	A+		BIP/	10/98 ▸	1J1907511C	**509573**
TT	M+			08/06 ▸	1K1907511C	**515064**
TT	A+			08/06 ▸	1K0907511B	**515065**
BMW						
1 series E81	+/-			01/07 ▸	64116956706	**509784**
1 series E87	+/-			09/04 ▸	64116956706	**509784**
3 series E90/E91/E92	A+			03/05 ▸	64116956706	**509784**
M3 E90-92	+/-			09/07 ▸	64116956706	**509784**
M3 E90M LCI	+/-			09/08 ▸	64116956706	**509784**
X1 (2009>)				10/09 ▸	64116956706	**509784**
X3 (2010>)	+/-			09/10 ▸	64116956706	**509784**
X5 (E70) (12/2006>)				12/06 ▸	64116956706	**509784**
X5 LCI (E70) (2010>)				03/10 ▸	64116956706	**509784**
X6 E71				05/08 ▸	64116956706	**509784**
Z4 (E89) (2009>)				03/09 ▸	64116956706	**509784**
CITROËN						
AX (91>98)	+			05/91 ▸ 07/98	6445G4	**509219**
C2	A+		Front Ventilation	09/03 ▸	6447NQ	**509507**
C2	M+		3P/	09/03 ▸	6447NR	**509508**
C3	+/-		3P/	04/02 ▸	6447NR	**509508**
C3	A+		Front Ventilation	04/02 ▸	6447NQ	**509507**
C3	M+		3P/	04/02 ▸	6447NR	**509508**
C5 (2001>2004)	A+		Stepper/ Mixage	02/01 ▸ 08/04	6447TK	**509964**
C5 (2001>2004)	A+		Stepper/ Recyclage	07/02 ▸ 08/04	6447HS	**509354**

• **New** Nouveau **Neu** Nuevo **Novo** Nuovo **Nieuw** Nowi **Новый** Novy **Nou** Yeni **Νέους**

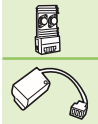

	A/C				OE	Valeo
CITROËN (.../...)						
Saxo ▸8056	+			03/96 ▸ 11/98	6445G4	**509219**
Saxo 8057 ▸	+			11/98 ▸	6445EQ	**509220**
Saxo (99>)	+			09/99 ▸	6445EQ	**509220**
XM (89>94)	+		Recyclage	05/89 ▸ 06/94	644764	**509226**
XM (94>2001)	+		Recyclage	07/94 ▸ 07/01	644764	**509226**
MERCEDES						
A Class (169)	+			07/04 ▸	1698200442	**509784**
B Class (2005>)	+			05/05 ▸	1698200442	**509784**
NISSAN						
Micra (K12) (2003>)	+		BIP/	01/03 ▸	27731AX700	**509598**
Micra (K12) (2003>)	+		Front Ventilation	01/03 ▸	27730AX010	**509597**
Micra (K12) (2003>)	+		Front Ventilation	01/03 ▸	27730AX015	**509596**
Note	+		BIP/	09/05 ▸	27731AX700	**509598**
Note	+		Front Ventilation	09/05 ▸	27730AX010	**509597**
OPEL						
Vectra B	-			10/95 ▸ 06/03	1618095	**509581**
Vectra B	+			10/95 ▸ 06/03	1618098	**509582**
OPEL						
Vivaro (2001>2006)				05/01 ▸ 07/06	4409449	**509227**
Vivaro (2006>)				07/06 ▸	4409449	**509227**
PEUGEOT						
106 ▸8056	+			09/91 ▸ 11/98	6445G4	**509219**
106 8057 ▸	+			11/98 ▸ 07/03	6445EQ	**509220**
405	+/-			07/92 ▸ 10/96	6447A5	**509222**
406	+			10/95 ▸ 05/97	6447A5	**509222**
406	+		Recyclage	10/95 ▸ 03/99	6447F6	**509224**
406	+		Recyclage	04/99 ▸	644764	**509226**
406 ▸7888	A+			10/95 ▸ 06/98	6447V1	**509225**
406 7889 ▸	A+			06/98 ▸ 04/03	6447CF	**509223**

• **New** Nouveau **Neu** Nuevo **Novo** Nuovo **Nieuw** Nowi **Новый** Novy **Nou** Yeni **Νέους**

	A/C				OE	Valeo
PEUGEOT (.../...)						
406	M+			05/97 ▸ 04/03	6447A5	**509222**
508				01/11 ▸	6479H8	**515124**
605 (89>99)	+		Recyclage	10/89 ▸ 05/99	644764	**509226**
RENAULT						
R19	+			02/92 ▸ 11/95	7702163822	**509229**
R21	+		12 volts	06/86 ▸ 08/95	7701033462	**509230**
R21	+/-		7 volts	03/86 ▸ 08/95	7701034351	**509231**
Clio II (98>2001)	A+		Rear	03/00 ▸ 03/01	7701051259	**515070**
Clio II (2001>)	A+			04/01 ▸	7701051259	**515070**
Clio III (2005>)	A+		On/Off/ Front Ventilation	09/05 ▸	7701060000	**509776**
Clio III (2005>)	A+		Mixage	09/05 ▸	7701060025	**509775**
Clio Campus Evolution (2009>)	+			06/09 ▸	7701051259	**515070**
Mégane	+/-		Recyclage	11/95 ▸ 03/98	7701043663	**515085**
Mégane (95>99)	-			11/95 ▸ 02/99	7701046055	**509227**
Mégane	-		Recyclage	04/98 ▸ 08/02	7701046055	**509227**
Mégane	+		Recyclage	04/98 ▸ 10/99	7701046056	**509228**
Mégane (98>2003)	+/-			10/98 ▸ 02/03	7701046055	**509227**
Mégane Classic (96>99)	+/-			04/98 ▸ 02/99	7701046055	**509227**
Mégane Scénic ▸ 980914	+/-			10/96 ▸ 09/98	7702163822	**509229**
Mégane Scénic	+			10/96 ▸ 04/03	7701046056	**509228**
Mégane II	A+		On/Off/ Front Ventilation	09/02 ▸	7701207720	**509603**
Mégane II	A+		Single pole stepper/	09/02 ▸	7701207721	**509604**
Mégane III	A+			10/08 ▸	277424777R	**515061**
Modus	A+		Mixage	09/04 ▸	7701060025	**509775**
Modus	A+		On/Off Electronique/ Front Ventilation	09/04 ▸	7701060000	**509776**
Safrane	+		Recyclage	05/92 ▸ 11/00	7701035913	**509224**
Scénic II	A+		Single pole stepper/	05/03 ▸	7701207721	**509604**
Scénic III (2009>)	A+		UNI/ Rear	04/09 ▸	7701207721	**509604**
Scénic III (2009>)	A+		Rear	04/09 ▸	277424777R	**515061**
Symbole - Thalia (2008>)				10/08 ▸	7701051259	**515070**
Thalia (2008>)	+			10/08 ▸	7701051259	**515070**
Twingo III (2007>)	A+		MIXAGE/ Rear	07/07 ▸	7701060025	**509775**
Wind			MIXAGE/	07/10 ▸	7701060025	**509775**
RENAULT						
Trafic (2001>2006)	+			04/01 ▸ 07/06	7701050311	**509227**
Trafic II (2006>)	+			07/06 ▸	7701050311	**509227**

• **New** Nouveau **Neu** Nuevo **Novo** Nuovo **Nieuw** Nowi **Новый** Novy **Nou** Yeni **Νέους**

	A/C				OE	Valeo
SAAB						
9-3 (2002>)	A+			09/02 ▸	13192013	**515126**
9-3 (2002>)	A-			09/02 ▸	13192013	**515126**
SEAT						
Altea (2004>2009)	+/-			03/04 ▸	1K0907511C	**515127**
Altea (2004>2009)	M+			03/04 ▸ 03/09	1K1907511C	**515064**
Cordoba (99>2002)	+/-		BIP/	03/99 ▸ 08/02	1J1907511C	**509573**
Ibiza (99>2001)	+/-		BIP/	06/99 ▸ 11/01	1J1907511C	**509573**
Ibiza (2001>) ▸ 6K-2-199999	A+		BIP/	09/01 ▸ 05/02	1J1907511C	**509573**
Leon	+/-		BIP/	02/02 ▸ 05/02	1J1907511C	**509573**
Leon	A+		BIP/	08/99 ▸ 07/05	1J1907511A	**509572**
Leon II (2005>2010)	+/-			08/05 ▸	1K0907511C	**515127**
Leon II (2005>2010)	M+			07/05 ▸ 05/10	1K1907511C	**515064**
Leon II (2005>2010)	A+			07/05 ▸ 05/10	1K0907511B	**515065**
Toledo (98>2004)	+/-		BIP/	10/98 ▸ 07/03	1J1907511C	**509573**
Toledo (98>2004)	A+		BIP/	10/98 ▸ 07/04	1J1907511A	**509572**
Toledo (2004>)	+/-			09/04 ▸	1K0907511C	**515127**
Toledo (2004>)	M+			09/04 ▸ 05/07	1K1907511C	**515064**
Toledo (2004>)	A+			09/04 ▸ 05/07	1K0907511B	**515065**
SKODA						
Octavia	+/-		BIP/	10/96 ▸ 04/04	1J1907511C	**509573**
Octavia (2004>2008)	-			05/04 ▸ 10/08	1K0907511C	**515127**
Octavia	A+		BIP/	10/96 ▸ 04/04	1J1907511A	**509572**
Octavia (2004>2008)	M+			05/04 ▸ 10/08	1K1907511C	**515064**
Octavia (2004>2008)	A+			05/04 ▸ 10/08	1K0907511B	**515065**
Superb II (2008>)	+			03/08 ▸	1K0907511C	**515127**
Superb II (2008>)	A+			03/08 ▸ 05/10	1K0907511B	**515065**
VAUXHALL						
Vectra (95>2002)	+			10/95 ▸ 03/02	90542762	**509581**
VAUXHALL						
Vivaro (2001>2006)				08/01 ▸ 06/06	91158688	**509227**
Vivaro (2006>)				07/06 ▸	91158688	**509227**
VOLKSWAGEN						
Bora (98>2005)	A+		BIP/	09/98 ▸ 05/05	1J1907511A	**509572**

• **New** Nouveau **Neu** Nuevo **Novo** Nuovo **Nieuw** Nowi **Новый** Novy **Nou** Yeni **Νέους**

	A/C				OE	Valeo
VOLKSWAGEN (.../...)						
Caddy (2004>2010)	M+			02/04 ▸ 08/10	1K1907511C	**515064**
Derby (99>)	A+		BIP/	11/99 ▸	1J1907511C	**509573**
Eos (2006>2010)				05/06 ▸ 11/10	1K0907511C	**515127**
Eos (2006>2010)	M+			05/06 ▸ 11/10	1K1907511C	**515064**
Eos (2006>2010)	A+			05/06 ▸ 11/10	1K0907511B	**515065**
Eos (2010>)	M+			11/10 ▸	1K0907511C	**515127**
Golf IV (97>2003)	+/-		BIP/	10/97 ▸ 09/03	1J1907511C	**509573**
Golf IV (97>2003)	A+		BIP/	10/97 ▸ 09/03	1J1907511A	**509572**
Golf V (2003>)	+/-			10/03 ▸	1K0907511C	**515127**
Golf V (2003>)	M+			10/03 ▸ 09/08	1K1907511C	**515064**
Golf V (2003>)	A+			10/03 ▸ 09/08	1K0907511B	**515065**
Golf V Plus (2005>)	+			01/05 ▸	1K0907511C	**515127**
Golf V Plus (2005>)	-			05/06 ▸ 01/09	1K0907511C	**515127**
Golf V Plus (2005>)	A+			01/05 ▸ 05/09	1K0907511B	**515065**
Golf VI (2008>)	+			10/08 ▸	1K0907511C	**515127**
Golf VI (2008>)	M+			10/08 ▸ 05/11	1K1907511C	**515064**
Golf VI (2008>)	A+			10/08 ▸ 05/11	1K0907511B	**515065**
Golf VI Plus (2009>)				01/09 ▸	1K0907511C	**515127**
Golf VI Plus (2009>)	M+			01/09 ▸	1K1907511C	**515064**
Jetta (2005>2010)	M+			08/05 ▸ 10/10	1K1907511C	**515064**
Jetta (2005>2010)	A+			08/05 ▸ 10/10	1K0907511B	**515065**
Jetta (2005>2010)	A+			12/05 ▸ 10/10	1K0907511C	**515127**
Jetta (2010>)	M+			04/10 ▸	1K0907511C	**515127**
Jetta (2010>)	M+			04/10 ▸	1K1907511C	**515064**
Lupo	A+		BIP/	10/98 ▸	1J1907511C	**509573**
Lupo	A+		BIP/	10/98 ▸ 07/05	1J2907511A	**509572**
New Beetle (98>2001)	A+		BIP/	01/98 ▸ 05/01	1J1907511C	**509573**
New Beetle (98>2001)	A+		BIP/	01/98 ▸ 05/01	1J1907511A	**509572**
Passat (2005>2010)	+			03/05 ▸	1K0907511C	**515127**
Passat (2005>2010)	A+			03/05 ▸ 11/10	1K0907511B	**515065**
Passat CC	+			05/08 ▸ 11/10	1K0907511C	**515127**
Passat CC	A+			05/08 ▸ 11/10	1K0907511B	**515065**
Polo (99>2004)	A+		BIP/	10/99 ▸ 05/04	1J1907511C	**509573**
Polo (99>2004)	A+		BIP/	10/99 ▸ 05/04	1J1907511A	**509572**
Scirocco (2008>)	+			08/08 ▸	1K0907511C	**515127**
Scirocco (2008>)	A+			08/08 ▸	1K0907511B	**515065**
Tiguan	M+			11/07 ▸	1K1907511C	**515064**
Tiguan	A+			11/07 ▸	1K0907511B	**515065**
Touran (2003>2006)	+/-			02/03 ▸ 11/06	1K0907511C	**515127**

• **New** Nouveau **Neu** Nuevo **Novo** Nuovo **Nieuw** Nowi **Новый** Novy **Nou** Yeni **Νέους**

	A/C				OE	Valeo
VOLKSWAGEN (.../...)						
Touran (2003>2006)	M+			02/03 ▸ 02/06	1K1907511C	**515064**
Touran (2003>2006)	A+			02/03 ▸ 02/06	1K0907511B	**515065**
Touran (2006>2010)	+/-			11/06 ▸ 05/10	1K0907511C	**515127**
Touran (2006>2010)	M+			11/06 ▸ 05/10	1K1907511C	**515064**
Touran (2006>2010)	A+			11/06 ▸ 05/10	1K0907511B	**515065**
VOLKSWAGEN						
Caddy (2004>2010)	-			02/04 ▸ 08/10	1K0907511C	**515127**

• **New** Nouveau **Neu** Nuevo **Novo** Nuovo **Nieuw** Nowi **Новый** Novy **Nou** Yeni **Νέους**

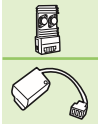

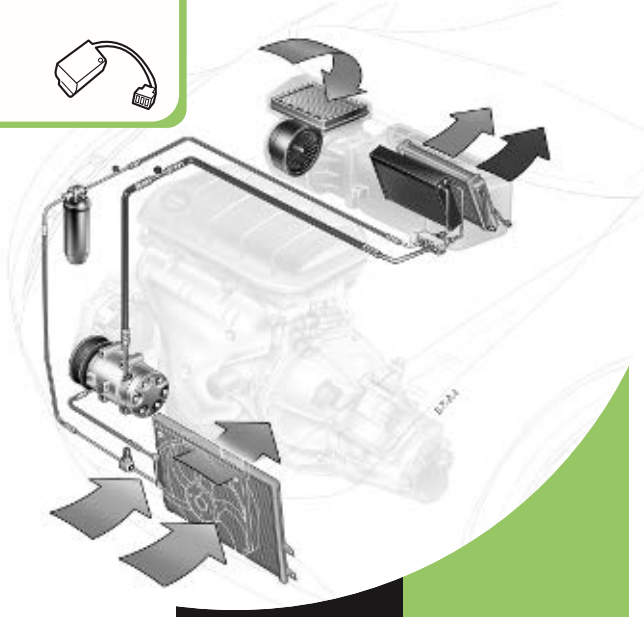

ACTUATOR

ACTIONNEUR

STELLEINHEIT

ACCIONADOR

ATUADOR

ATTUATORE

BESTURINGSMOTOR

SILNIK KROKOWY

ЭЛЕКТРИЧЕСКИЙ ДВИГАТЕЛЬ

OVL DAČ

MECANISM DE ACTIONARE

H REKETLENDIRICI

Ενεργοποιητής

TECH.COD.

CT	Valeo	i
VALEO		
034319R0	**509775**	
101029T0	**509776**	
251272S	**509230**	
532.8011.30V	**509572**	
532.8011.34V	**509573**	
532.8040.62V	**509581**	
532.8040.65V	**509582**	
601386C	**509231**	
650723S	**509221**	
654294A	**509225**	
656692K	**509219**	
656692K	**509222**	
657300F	**509223**	
657302N	**509220**	
657339X	**509228**	
657340D	**509227**	
828105T	**509226**	
833812R	**509229**	
847264A	**509224**	
985458DV	**509784**	
F509354K	**509354**	
F665243L	**509604**	
M030990Q	**509603**	
N100461V	**509598**	
N100462G	**509507**	
N100463X	**509508**	
N100464D	**509597**	
N100495G	**509596**	

CT	Valeo	i

CT	Valeo	i

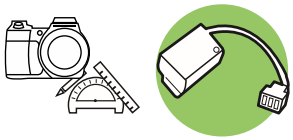

Valeo 509219

656692K

CITROËN 6445G4

Valeo 509224

847264A

PEUGEOT 6447F6
RENAULT 7701035913

Valeo 509220

657302N

CITROËN 6445EQ

Valeo 509225

654294A

PEUGEOT 6447V1

Valeo 509222

656692K

PEUGEOT 6447A5

Valeo 509226

828105T

CITROËN 644764

Valeo 509223

657300F

PEUGEOT 6447CF

Valeo 509227

657340D

RENAULT 7701046055
RENAULT 7701050311

509228

657339X

RENAULT	7701046056

509229

833812R

RENAULT	7702163822

509230

251272S

RENAULT	7701033462

509231

601386C

RENAULT	7701034351

509354

F509354K

CITROËN	6447HS

509507

N100462G

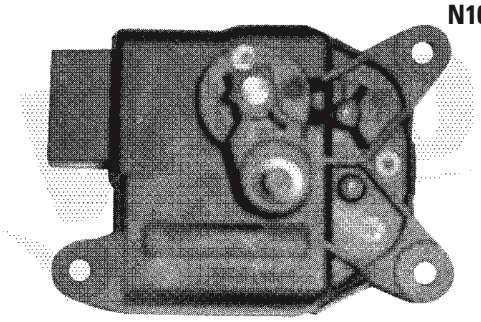

CITROËN	6447NQ

509508

N100463X

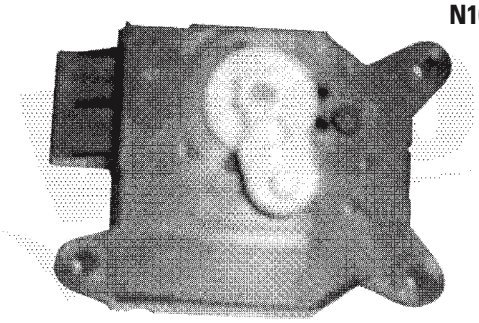

CITROËN	6447NR

509572

532.8011.30V

AUDI	1J1907511A
SEAT	1J1907511A
SKODA	1J1907511A
VOLKSWAGEN	1J1907511A

509573

532.8011.34V

AUDI	1J1907511C
SEAT	1J1907511C
SKODA	1J1907511C
VOLKSWAGEN	1J1907511C

509581

532.8040.62V

OPEL	1618095
VAUXHALL	90542762

509582

532.8040.65V

OPEL	1618098

509596

N100495G

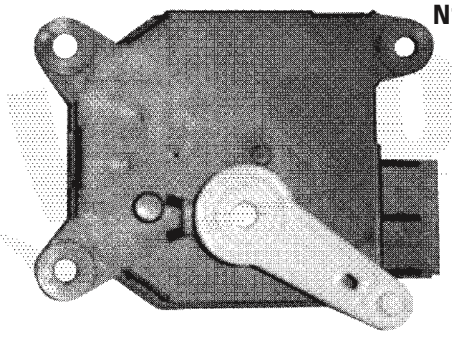

NISSAN	27730AX015

509597

N100464D

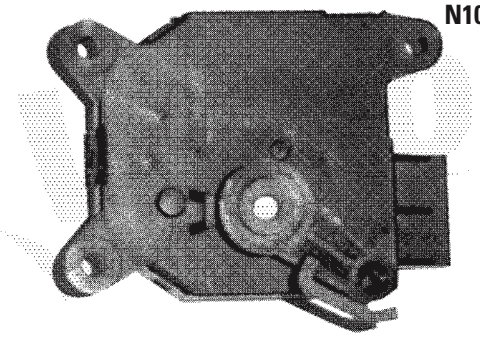

NISSAN	27730AX010

509598

N100461V

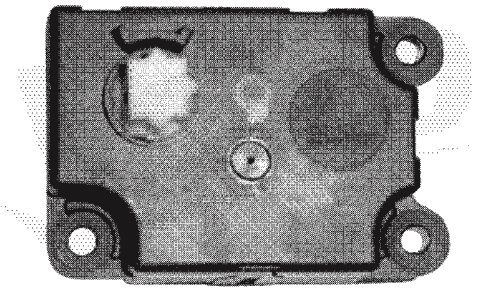

NISSAN	27731AX700

509603

M030990Q

RENAULT	7701207720

509604

F665243L

RENAULT	7701207721

Valeo 509775

034319R0

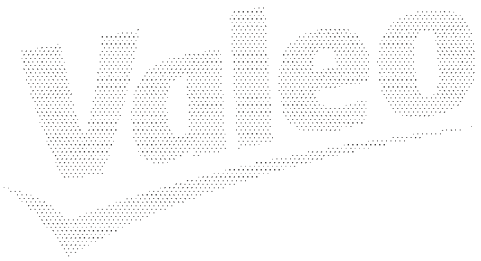

RENAULT	7701060025

Valeo 509776

101029T0

RENAULT	7701060000

Valeo 509784

985458DV

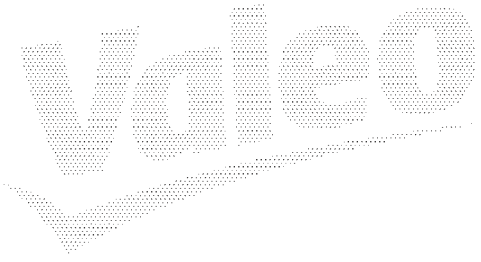

BMW	64116956706
MERCEDES	1698200442

Valeo 509964

CITROËN	6447TK

Valeo 515061

RENAULT	277424777R

Valeo 515064

AUDI	1K1907511C
SEAT	1K1907511C
SKODA	1K1907511C
VOLKSWAGEN	1K1907511C

Valeo 515065

AUDI	1K0907511B
SEAT	1K0907511B
SKODA	1K0907511B
VOLKSWAGEN	1K0907511B

Valeo 515070

RENAULT	7701051259

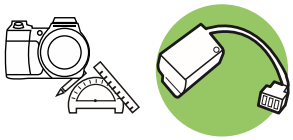

Valeo 515085

RENAULT	7701043663

Valeo 515128

ALFA ROMEO	77365572

Valeo 515124

PEUGEOT	6479H8

Valeo 515126

SAAB	13192013

Valeo 515127

AUDI	1K0907511C
SEAT	1K0907511C
SKODA	1K0907511C
VOLKSWAGEN	1K0907511C

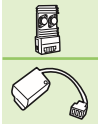

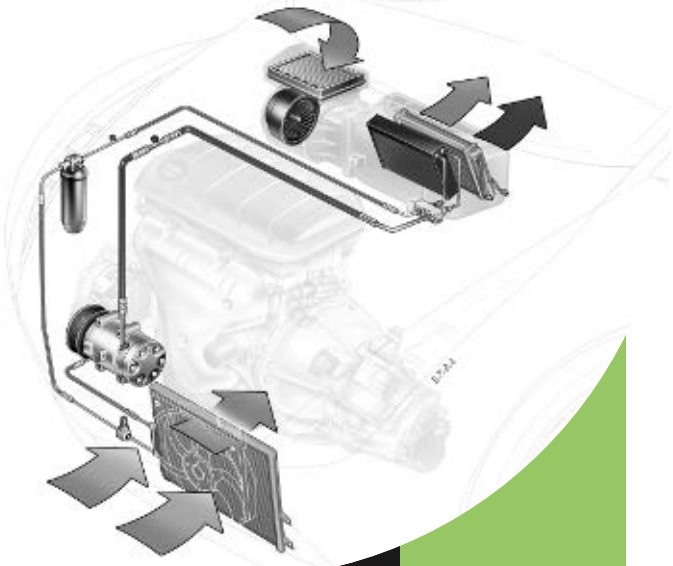

5.1

OE	IAM	PROD	Valeo
ABARTH			
46723321			**698866**
55702456			**715552**
ALFA ROMEO			
7797229			**698199**
46476438			**509476**
46721527			**812400**
46721923			**698174**
46768973			**817463**
46786262			**699284**
46790658			**817527**
46799653			**698747**
46799655			**812278**
50507287			**818187**
60510695			**508611**
60513513			**699581**
60571123			**699612**
60586685			**698157**
60600702			**699646**
60601070			**699114**
60601092			**813680**
60602694			**699507**
60604347			**699611**
60617282			**508805**
60625482			**509476**
60626904			**508805**
60628820			**817527**
60653641			**698687**
60653641			**698197**
60653642			**698689**
60653652			**699175**
60653652			**699675**
60653653			**699201**
60653653			**699701**
60654446			**699284**
60656701			**508805**
60659643			**699284**
60662250			**508805**
60668109			**817818**
60693331			**813122**
60693332			**813123**
60693746			**813121**
60693875			**813156**
60694767			**818187**
60698005			**818187**
60779298			**812279**
60779304			**509489**
60779333			**715001**
60779342			**715002**
60779343			**715003**
60779451			**812279**
60779470			**812176**
60779485			**509678**
60801430			**698199**
60805074			**811066**
60807597			**816973**
60809015			**811075**
60810151			**508628**
60810200			**508630**
60810249			**508970**

OE	IAM	PROD	Valeo
ALFA ROMEO (.../...)			
60810323			**508655**
60810355			**699075**
60810355			**699575**
60810570			**698174**
60811865			**509474**
60813064			**508805**
60813335			**699174**
60813335			**699674**
60813905			**509490**
60814060			**699279**
60814643			**698688**
71721743			**813680**
71737165			**509920**
71740363			**509592**
71748263			**509933**
71754158			**715532**
77363370			**715533**
77363481			**715532**
77365569			**715248**
77365570			**515077**
77365861			**715249**
82487879			**814293**
93162491			**698687**
573228900			**698688**
60693333			**813255**
77365352			**715705**
77365572			**515128**
77365580			**515132**
77365588			**812426**
AUDI			
357820021			**698157**
358820021			**715004**
811819031			**812034**
893260403			**814291**
893819021			**698030**
893820021			**698030**
077260803AD			**699730**
077260803AE			**699731**
171819031A			**812034**
171819031E			**812034**
1H0091800			**698686**
1H0819644			**698159**
1H0819644A			**698159**
1H0959139B			**509477**
1H1819031A			**812030**
1H2819031A			**812031**
1J0819644A			**698716**
1J0820191B			**508811**
1J0820191D			**508811**
1J0820413B			**817244**
1J0820413D			**817244**
1J0820413L			**817244**
1J0820413N			**817244**
1J0820721AA			**818401**
1J0820721T			**818402**
1J0820803K			**813200**
1J0820803K			**813700**
1J0820803K			**813400**
1J0820803L			**813200**

OE	IAM	PROD	Valeo
AUDI (.../...)			
1J0820803L			**813700**
1J0820805			**813200**
1J0820805			**813700**
1J0820805			**813400**
1J0959126			**509662**
1J1819021			**698262**
1J1819021A			**698262**
1J1819021B			**698262**
1J1819021C			**698262**
1J1907511A			**509572**
1J1907511C			**509573**
1J2819021			**698263**
1J2819021A			**698263**
1J2819021B			**698263**
1J2819021C			**698263**
1J2907511A			**509574**
1K0298403			**509790**
1K0298403A			**509790**
1K0819031			**812254**
1K0819031A			**812254**
1K0819031B			**812254**
1K0819644			**698800**
1K0819644A			**698800**
1K0820411E			**816967**
1K0820411G			**817777**
1K0820411H			**817777**
1K0820411P			**817777**
1K0820679			**509901**
1K0820803F			**699357**
1K0820803F			**699857**
1K0820803G			**699357**
1K0820803L			**699357**
1K0820803N			**699357**
1K0820803N			**699857**
1K0820803Q			**699357**
1K0820803S			**699357**
1K0820803S			**699857**
1K0820859F			**699857**
1K0820859M			**699857**
1K0820859M			**699857**
1K0820859M			**699357**
1K0907511B			**515065**
1K0907511C			**515127**
1K0959126B			**509662**
1K0959263A			**515074**
1K1819015			**698809**
1K1819653			**698801**
1K1819653A			**698801**
1K1820015			**698811**
1K1820015A			**698811**
1K1820015C			**698811**
1K1820015D			**698811**
1K1820015E			**698811**
1K1820015F			**698811**
1K1820103			**817719**
1K1820103A			**817719**
1K1907511C			**515064**
1K2819015			**698810**
1K2819653			**715665**
1K2820015			**698812**

OE IAM	PROD	Valeo
AUDI (.../...)		
1K2820103		**817720**
357 820 803 C		**699514**
3C0907521F		**515135**
3C2820015		**698812**
3C2820015D		**698812**
3C2820015E		**698812**
3C2820015F		**698812**
443260403F		**814295**
443271191A		**508970**
4A0260805AH		**699727**
4A0260805AJ		**699728**
4A0819430A		**698682**
4A0819439A		**698684**
4A0819439A		**715683**
4A0820191AA		**508885**
4A0820191AB		**508882**
4B0091800		**698682**
4B0260403AA		**817665**
4B0260403H		**817666**
4B0260403R		**817665**
4B0260403S		**817997**
4B0260403T		**817666**
4B0260805B		**813166**
4B0260805C		**699275**
4B0260805C		**699775**
4B0260805J		**813836**
4B0260805K		**699380**
4B0260805N		**699275**
4B0260805N		**699775**
4B0819439A		**698682**
4B0819439C		**698683**
4B0820177		**508971**
4B0820192		**508881**
4B0820193		**508881**
4B0820193A		**509704**
4B3260805		**813166**
4D0260805C		**699275**
4D0260805C		**699775**
4D0819439		**698790**
4D0819439A		**698791**
4E0819439A		**698792**
4F0260403E		**814004**
4F0819439		**715500**
4F0819439A		**715501**
4H0819439		**715733**
4L0260401A		**817838**
5Q0818653		**715720**
6N0820679A		**508641**
6N0820679C		**508641**
6Q0819653		**698739**
6Q0819653B		**698739**
6Q0820367		**698685**
6Q1819015H		**715241**
6Q1820015H		**715240**
6R0819653		**715727**
6R0820367		**715737**
6R0820411G		**814364**
6R0820411J		**814364**
7H0819631		**715581**
7L0898191A		**509932**

OE IAM	PROD	Valeo
AUDI (.../...)		
867819121A		**812029**
893260403L		**814288**
894819031A		**812012**
8A0260403AC		**814296**
8A0260403D		**814286**
8A0260805AF		**699729**
8A0819439		**698164**
8A0819439A		**698164**
8A0820177AA		**508971**
8A0820191AB		**508881**
8A0820191B		**508880**
8A1820021		**698215**
8D0091800		**715578**
8D0260401A		**816967**
8D0260401C		**816967**
8D0260401D		**816967**
8D0260401H		**816967**
8D0260403A		**816967**
8D0260403C		**816967**
8D0260403D		**816967**
8D0260403E		**816967**
8D0260403G		**817840**
8D0260403H		**816967**
8D0260701H		**818449**
8D0260805B		**699876**
8D0260805D		**699222**
8D0260805D		**699722**
8D0260805E		**699725**
8D0260805F		**699222**
8D0260805F		**699722**
8D0260805J		**699376**
8D0260805M		**699222**
8D0260805M		**699722**
8D0260805RX		**699876**
8D0820193		**509501**
8D0820193A		**509733**
8D0959482B		**509661**
8D1260710F		**818450**
8D1820103B		**817521**
8D1820103D		**817521**
8D2820021		**698216**
8E0260403B		**817569**
8E0260403D		**817741**
8E0260403E		**818190**
8E0260403L		**817741**
8E0260403M		**818190**
8E0260403P		**818190**
8E0260403Q		**818190**
8E0260403R		**818190**
8E0260403T		**817741**
8E0260805		**699880**
8E0260805AB		**699380**
8E0260805AF		**813837**
8E0260805BA		**813150**
8E0260805BF		**813150**
8E0260805BJ		**813150**
8E0260805BP		**813150**
8E0260805C		**699381**
8E0260805G		**813190**
8E0819439		**698606**

OE IAM	PROD	Valeo
AUDI (.../...)		
8E0820193C		**509712**
8E0820193E		**509907**
8E1820021B		**698813**
8E1820021E		**698813**
8E1820031		**812255**
8E2820021B		**698814**
8E2820021E		**698814**
8E2820031		**812256**
8J0260805		**813838**
8J0260805		**813838**
8K0260403AB		**814370**
8K0260403E		**814370**
8K0260403M		**814370**
8K0260805L		**813835**
8K0819439		**715579**
8K0819439A		**715580**
8L0091800		**698686**
8Z0260403C		**817570**
8Z0260403D		**817570**
8Z0819030		**812319**
8Z0820193B		**509931**
8Z0959126		**509662**
AVA		
AI5106		**814291**
AI5119		**814288**
AI5135		**814296**
AI5159		**814286**
AI5184		**814295**
AL5063		**816973**
AU5116		**817781**
AU5143		**818025**
AU5182		**814165**
BW5377		**814367**
CN5099		**816803**
CN5263		**814366**
CN5272		**814363**
DF5034		**818986**
DN5164		**817792**
DN5175		**814300**
DN5184		**814284**
DN5185		**814252**
DN5186		**814256**
DN5194		**817732**
DN5201		**817819**
DN5204		**814304**
DN5277		**817822**
DN5281		**814008**
DN5283		**814009**
DN5290		**814010**
DN5328		**814231**
DU5064		**814206**
DW5006		**814277**
FT5175		**814292**
HD5062		**818070**
HD5085		**814276**
HD5086		**814302**
HD5105		**817783**
HD5165		**817780**
HD5185		**814242**

OE IAM	PROD	Valeo
AVA (.../...)		
HD5186		**814267**
HD5197		**814241**
HD5201		**814225**
HD5202		**814243**
HD5223		**814217**
HY5045		**814255**
HY5092		**814264**
IV5081		**818985**
JR5043		**814199**
LC5089		**814293**
LC5090		**814198**
MS5360		**818200**
MS5361		**814368**
MS5493		**814186**
MT5098		**818081**
MT5105		**814240**
MT5119		**814303**
MT5178		**814262**
MT5210		**814315**
MZ5103		**814281**
MZ5106		**814274**
MZ5107		**814254**
MZ5118		**814251**
MZ5120		**818084**
MZ5125		**814253**
MZ5125		**814257**
MZ5126		**818085**
MZ5141		**818086**
MZ5145		**814278**
MZ5147		**818087**
MZ5155		**818088**
MZ5157		**818090**
MZ5184		**814265**
MZ5196		**814266**
MZ5197		**814258**
MZ5209		**814215**
OL5349		**817798**
OL5367		**817846**
OL5394		**814014**
OL5499		**814202**
OL5500		**814201**
PE5184		**816835**
PR5052		**814167**
SB5031		**814317**
ST5038		**814364**
SU5028		**814259**
SU5044		**818101**
SU5060		**814312**
SU5061		**814311**
SU5063		**814268**
SU5073		**814314**
SZ5056		**814244**
SZ5108		**814228**
SZ5116		**814219**
TO5118		**818103**
TO5130		**814285**
TO5190		**814248**
TO5191		**814279**
TO5192		**814282**
TO5197		**814245**

OE IAM	PROD	Valeo
AVA (.../...)		
TO5202		**814246**
TO5226		**814310**
TO5244		**814280**
TO5250		**817803**
TO5253		**814283**
TO5262		**818105**
TO5265		**814308**
TO5266		**817802**
TO5271		**814298**
TO5279		**818107**
TO5280		**818032**
TO5281		**814218**
TO5288		**814261**
TO5382		**814307**
TO5392		**814208**
TO5393		**814209**
TO5394		**814271**
TO5404		**814223**
TO5405		**814234**
TO5406		**814205**
TO5407		**814224**
TO5409		**814213**
TO5410		**814204**
TO5411		**814210**
TO5413		**814233**
TO5429		**814158**
TO5431		**814212**
TO5481		**814211**
TO5564		**814230**
TO5569		**814203**
TO5578		**814220**
TO5585		**814269**
VL5025		**818987**
VL5027		**818984**
VW5146		**817024**
VW5178		**817247**
VW5225		**814002**
VW5244		**817838**
BALDWIN		
PA3980		**716034**
PA4612		**716006**
PA4928		**716004**
PA4938		**716039**
PA4945		**716019**
PA4947		**716033**
PA4955		**716036**
PA5330		**716001**
PA5336		**716028**
PA5339		**716035**
PA5340		**716014**
PA5341		**716007**
PA9812		**716010**
BEHR HELLA		
6ZL351023001		**509667**
6ZL351023041		**509482**
6ZL351023051		**509478**
6ZL351024041		**509479**

OE IAM	PROD	Valeo
BEHR HELLA (.../...)		
6ZL351024071		**509478**
6ZL351028021		**509668**
6ZL351028031		**509669**
6ZL351028071		**508659**
6ZL351028081		**509484**
6ZL351028091		**508830**
6ZL351028101		**509661**
6ZL351028111		**509477**
6ZL351028121		**508814**
6ZL351028131		**508815**
6ZL351028141		**508818**
6ZL351028151		**508653**
6ZL351028161		**509486**
6ZL351028171		**508660**
6ZL351028181		**508638**
6ZL351028191		**508665**
6ZL351028201		**508663**
6ZL351028211		**509665**
6ZL351028221		**509662**
6ZL351028231		**509485**
6ZL351028241		**509483**
6ZL351028251		**508654**
6ZL351028261		**508662**
8EW009100011		**715014**
8EW009100031		**715010**
8EW009100041		**715009**
8EW009100061		**715015**
8EW009100081		**715026**
8EW009100091		**715027**
8EW009100111		**715011**
8EW009100121		**715018**
8EW009100131		**715022**
8EW009100141		**715021**
8EW009100151		**715019**
8EW009100161		**715020**
8EW009100171		**715029**
8EW009100181		**715028**
8EW009100191		**715030**
8EW009100201		**715023**
8EW009100221		**715024**
8EW009100251		**715036**
8EW009100261		**715035**
8EW009100291		**698080**
8EW009100301		**698262**
8EW009100311		**698030**
8EW009100341		**715043**
8EW009100371		**715007**
8EW009100391		**698841**
8EW009100421		**715031**
8EW009100431		**715032**
8EW009100461		**698030**
8EW009100461		**698157**
8EW009100491		**715034**
8EW009100501		**698393**
8EW009100521		**715044**
8EW009100641		**715037**
8EW009100681		**715039**
8EW009100691		**715038**
8EW009100701		**715003**
8EW009100711		**715001**

OE IAM	PROD	Valeo
BEHR HELLA (.../...)		
8EW009100721		**715002**
8EW009143011		**883966**
8EW009159081		**698215**
8EW009159191		**698072**
8EW009159461		**715033**
8EW009160701		**715016**
8EW009160711		**715017**
8EW351039311		**698533**
8EW351039321		**698534**
8FA351138091		**699568**
8FA351138091		**699695**
8FC351024151		**814260**
8FC351024171		**814256**
8FC351029091		**818986**
8FC351035231		**816803**
8FC351035231		**816803**
8FC351035261		**816835**
8FC351035261		**816835**
8FC351035271		**816865**
8FC351035281		**816850**
8FC351035341		**816866**
8FC351035421		**816852**
8FC351035461		**816867**
8FC351035471		**816756**
8FC351035471		**816987**
8FC351035501		**814317**
8FC351035521		**816922**
8FC351035581		**817232**
8FC351035641		**816921**
8FC351035661		**818009**
8FC351035711		**814276**
8FC351035741		**814274**
8FC351036011		**816900**
8FC351036041		**816977**
8FC351036061		**816908**
8FC351036071		**817507**
8FC351036081		**816910**
8FC351036091		**817675**
8FC351036111		**816948**
8FC351036151		**816981**
8FC351036171		**817375**
8FC351036191		**816912**
8FC351036191		**816912**
8FC351036201		**816839**
8FC351036251		**814289**
8FC351036281		**817781**
8FC351036301		**814251**
8FC351036361		**817023**
8FC351036381		**817244**
8FC351036401		**817230**
8FC351036411		**816992**
8FC351036421		**817197**
8FC351036421		**817225**
8FC351036441		**699261**
8FC351036491		**817792**
8FC351036491		**817794**
8FC351036511		**817253**
8FC351036571		**818099**
8FC351036581		**814244**
8FC351036591		**818104**

OE IAM	PROD	Valeo
BEHR HELLA (.../...)		
8FC351036611		**818105**
8FC351036631		**814285**
8FC351036661		**817560**
8FC351036671		**817559**
8FC351036741		**816973**
8FC351036761		**817252**
8FC351037051		**817248**
8FC351037081		**814246**
8FC351037101		**816885**
8FC351037151		**816984**
8FC351037161		**816891**
8FC351037171		**816949**
8FC351037331		**817562**
8FC351037341		**817011**
8FC351037361		**818081**
8FC351037381		**816902**
8FC351037381		**816924**
8FC351037421		**817247**
8FC351037441		**814295**
8FC351037451		**817527**
8FC351037471		**817493**
8FC351037481		**817288**
8FC351037491		**818070**
8FC351037511		**817283**
8FC351037541		**817171**
8FC351037551		**816867**
8FC351037581		**816902**
8FC351037581		**816924**
8FC351037591		**816902**
8FC351037631		**817670**
8FC351037641		**817675**
8FC351037651		**817427**
8FC351037741		**817783**
8FC351037751		**817197**
8FC351037781		**814248**
8FC351038201		**817383**
8FC351038211		**817405**
8FC351038221		**816964**
8FC351038301		**817385**
8FC351038311		**817684**
8FC351038311		**818006**
8FC351038321		**817685**
8FC351038411		**814300**
8FC351038421		**817997**
8FC351038431		**816967**
8FC351038431		**817840**
8FC351038451		**817563**
8FC351038461		**817492**
8FC351038491		**817603**
8FC351038501		**817235**
8FC351038521		**814298**
8FC351038521		**818107**
8FC351038531		**814282**
8FC351038541		**818086**
8FC351038551		**817569**
8FC351038551		**817570**
8FC351038561		**816756**
8FC351038581		**817819**
8FC351038591		**817428**
8FC351038591		**817662**

OE IAM	PROD	Valeo
BEHR HELLA (.../...)		
8FC351038681		**817666**
8FC351038691		**817245**
8FC351038701		**818085**
8FC351038711		**817567**
8FC351038721		**817458**
8FC351038731		**817803**
8FC351038741		**817802**
8FC351038801		**817561**
8FC351038811		**817406**
8FC351300001		**817607**
8FC351300011		**818008**
8FC351300021		**814286**
8FC351300061		**818040**
8FC351300071		**818044**
8FC351300081		**818041**
8FC351300091		**818042**
8FC351300111		**816962**
8FC351300121		**818033**
8FC351300131		**818034**
8FC351300131		**818034**
8FC351300141		**818035**
8FC351300161		**817247**
8FC351300161		**817247**
8FC351300171		**817246**
8FC351300171		**817247**
8FC351300201		**816996**
8FC351300211		**818036**
8FC351300241		**817569**
8FC351300251		**817464**
8FC351300251		**817465**
8FC351300261		**817674**
8FC351300291		**817655**
8FC351300301		**817644**
8FC351300301		**817647**
8FC351300311		**817644**
8FC351300311		**817648**
8FC351300321		**817567**
8FC351300321		**817657**
8FC351300341		**817568**
8FC351300351		**817664**
8FC351300351		**818195**
8FC351300371		**814095**
8FC351300381		**817665**
8FC351300391		**817679**
8FC351300391		**817840**
8FC351300411		**817445**
8FC351300471		**818087**
8FC351300491		**817428**
8FC351300501		**817022**
8FC351300511		**817509**
8FC351300531		**817463**
8FC351300541		**817805**
8FC351300551		**817015**
8FC351300571		**818987**
8FC351300581		**818984**
8FC351300591		**818024**
8FC351300601		**817609**
8FC351300611		**817610**
8FC351300611		**818118**
8FC351300621		**817610**

OE IAM	PROD	Valeo
BEHR HELLA (.../...)		
8FC351300631		**817575**
8FC351300641		**817547**
8FC351300651		**817602**
8FC351300661		**817526**
8FC351300671		**817524**
8FC351300711		**818003**
8FC351300731		**817732**
8FC351300741		**818006**
8FC351300751		**818050**
8FC351300761		**814283**
8FC351300771		**814247**
8FC351301031		**817508**
8FC351301041		**817777**
8FC351301051		**817806**
8FC351301071		**817741**
8FC351301081		**816945**
8FC351301091		**818092**
8FC351301101		**817386**
8FC351301121		**817842**
8FC351301131		**814254**
8FC351301141		**817477**
8FC351301171		**818003**
8FC351301191		**814066**
8FC351301191		**817843**
8FC351301201		**817844**
8FC351301211		**817669**
8FC351301221		**817505**
8FC351301221		**818047**
8FC351301241		**817505**
8FC351301261		**818028**
8FC351301271		**817801**
8FC351301281		**817229**
8FC351301291		**817042**
8FC351301301		**817837**
8FC351301321		**817850**
8FC351301331		**817851**
8FC351301341		**817849**
8FC351301351		**817848**
8FC351301361		**817504**
8FC351301371		**817506**
8FC351301381		**817667**
8FC351301391		**817659**
8FC351301401		**816967**
8FC351301401		**817777**
8FC351301411		**818093**
8FC351301421		**814167**
8FC351301431		**817731**
8FC351301441		**818027**
8FC351301521		**818004**
8FC351301531		**817686**
8FC351301561		**817608**
8FC351301581		**816902**
8FC351301581		**816924**
8FC351301601		**814085**
8FC351301631		**814007**
8FC351301641		**814006**
8FC351301651		**818193**
8FC351301661		**814069**
8FC351301701		**818020**
8FC351301711		**818017**

OE IAM	PROD	Valeo
BEHR HELLA (.../...)		
8FC351301711		**818021**
8FC351301721		**818017**
8FC351301731		**818046**
8FC351301741		**818114**
8FC351301751		**817847**
8FC351301761		**817839**
8FC351301771		**817846**
8FC351302041		**814304**
8FC351302061		**814305**
8FC351302111		**814218**
8FC351302151		**817230**
8FC351302161		**814264**
8FC351302201		**814307**
8FC351302221		**814241**
8FC351302241		**817445**
8FC351302371		**818168**
8FC351302381		**814198**
8FC351302391		**817818**
8FC351302411		**816985**
8FC351302421		**818030**
8FC351302441		**817741**
8FC351302451		**814004**
8FC351302481		**817798**
8FC351302491		**814367**
8FC351302531		**817852**
8FC351302551		**814014**
8FC351302591		**814170**
8FC351302591		**817809**
8FC351302611		**814011**
8FC351302621		**814012**
8FC351302711		**814250**
8FC351303371		**814080**
8FC351303401		**814186**
8FC351303511		**817379**
8FC351303531		**818013**
8FC351303531		**818014**
8FC351303541		**814095**
8FC351303581		**818018**
8FC351303591		**817645**
8FC351303611		**814081**
8FC351303651		**817668**
8FC351303661		**818015**
8FC351303671		**814208**
8FC351303681		**814242**
8FC351303691		**814159**
8FC351303711		**818031**
8FC351303741		**814266**
8FC351303761		**814267**
8FC351304081		**817790**
8FC351304121		**814314**
8FC351304131		**814000**
8FC351304141		**814312**
8FC351304171		**814278**
8FC351304171		**814281**
8FC351304221		**814309**
8FC351304231		**814272**
8FC351304231		**814273**
8FC351304281		**814366**
8FC351304321		**817024**
8FC351304341		**814204**

OE IAM	PROD	Valeo
BEHR HELLA (.../...)		
8FC351304351		**814228**
8FC351304431		**814237**
8FC351304461		**817780**
8FC351304471		**817711**
8FC351304501		**818000**
8FC351304501		**818001**
8FC351304511		**814287**
8FC351304721		**818192**
8FC351304741		**814227**
8FC351304751		**818190**
8FC351304781		**814158**
8FC351305211		**818191**
8FC351305221		**817579**
8FC351305231		**817668**
8FC351305551		**818018**
8FC351305681		**818037**
8FC351306111		**818084**
8FC351306121		**814253**
8FC351306121		**814257**
8FC351307361		**818988**
8FC351307381		**814311**
8FC351307661		**814223**
8FC351307671		**814224**
8FC351307681		**814213**
8FC351307751		**814315**
8FC351307771		**814238**
8FC351308771		**814231**
8FC351308781		**814232**
8FC351309131		**814364**
8FC351310611		**814201**
8FC351310621		**814202**
8FC351317001		**814292**
8FC351317011		**817230**
8FC351317141		**817235**
8FC351317271		**814252**
8FC351317451		**817841**
8FC351317461		**817838**
8FC351317481		**814165**
8FC351317491		**814368**
8FC351317501		**818200**
8FC351317541		**814002**
8FC351317551		**814089**
8FC351317561		**818170**
8FC351317571		**818171**
8FC351317611		**818043**
8FC351317631		**818985**
8FC351317701		**814302**
8FC351317741		**817067**
8FC351317761		**817799**
8FC351317771		**817799**
8FC351317781		**817608**
8FC351318001		**818025**
8FC351318001		**818025**
8FC351318031		**814277**
8FC351318051		**814303**
8FC351318061		**814225**
8FC351318311		**818023**
8FC351318371		**817701**
8FC351318381		**818194**
8FC351318391		**818187**

OE IAM	PROD	Valeo
BEHR HELLA (.../...)		
8FC351318401		**814199**
8FC351318411		**814087**
8FC351318431		**818187**
8FC351319411		**814370**
8FC351319441		**814365**
8FC351319451		**814363**
8FC351330401		**814243**
8FH351024211		**812034**
8FH351024221		**812335**
8FH351024261		**812219**
8FH351024271		**812222**
8FH351024271		**812284**
8FH351024291		**883976**
8FH351024301		**812005**
8FH351024321		**812002**
8FH351024331		**508555**
8FH351024331		**883976**
8FH351024341		**883739**
8FH351024351		**812288**
8FH351024361		**812287**
8FH351024401		**812013**
8FH351024421		**812279**
8FH351024451		**812132**
8FH351024461		**812016**
8FH351311001		**812334**
8FH351311011		**812031**
8FH351311031		**812169**
8FH351311041		**812030**
8FH351311051		**883790**
8FH351311061		**812031**
8FH351311071		**883965**
8FH351311111		**812323**
8FH351311121		**812319**
8FH351311141		**812222**
8FH351311181		**812321**
8FH351311211		**812365**
8FH351311231		**812363**
8FH351311281		**812005**
8FH351311281		**812044**
8FH351311301		**812360**
8FH351311311		**812223**
8FH351311321		**812318**
8FH351311331		**812220**
8FH351311341		**812221**
8FH351311391		**812328**
8FH351311411		**812326**
8FH351311431		**812238**
8FH351311441		**812296**
8FH351311481		**883520**
8FH351311561		**812015**
8FH351311571		**812129**
8FH351311581		**812129**
8FH351311591		**812084**
8FH351311611		**812304**
8FH351311631		**812157**
8FH351311651		**812114**
8FH351311671		**812115**
8FH351311691		**812299**
8FH351311701		**812112**
8FH351311711		**812113**

OE IAM	PROD	Valeo
BEHR HELLA (.../...)		
8FH351311731		**812116**
8FH351311771		**812148**
8FH351311781		**812150**
8FH351311791		**812240**
8FH351312001		**883965**
8FH351312011		**812294**
8FH351312021		**812366**
8FH351312131		**812322**
8FH351312161		**812397**
8FH351312331		**812045**
8FH351312361		**812351**
8FH351312371		**812349**
8FH351312411		**812343**
8FH351312421		**812346**
8FH351312441		**812350**
8FH351312491		**812345**
8FH351312501		**812344**
8FH351312521		**812251**
8FH351312551		**812352**
8FH351312751		**812362**
8FH351312771		**812239**
8FH351313021		**812149**
8FH351313031		**812146**
8FH351313041		**811075**
8FH351313041		**812156**
8FH351313051		**883971**
8FH351313061		**811397**
8FH351313091		**812273**
8FH351313101		**812276**
8FH351313111		**812057**
8FH351313121		**812053**
8FH351313131		**812058**
8FH351313141		**812117**
8FH351313151		**812118**
8FH351313161		**812275**
8FH351313171		**812141**
8FH351313201		**812303**
8FH351313211		**811065**
8FH351313221		**811066**
8FH351313221		**811075**
8FH351313231		**812058**
8FH351313241		**812272**
8FH351313251		**812276**
8FH351313281		**812110**
8FH351313291		**812126**
8FH351313301		**812139**
8FH351313311		**812048**
8FH351313321		**812154**
8FH351313331		**812286**
8FH351313341		**812029**
8FH351313351		**812081**
8FH351313351		**812145**
8FH351313361		**811066**
8FH351313371		**812141**
8FH351313381		**812081**
8FH351313391		**812169**
8FH351313401		**812013**
8FH351313421		**812161**
8FH351313431		**812037**
8FH351313441		**812014**

OE IAM	PROD	Valeo
BEHR HELLA (.../...)		
8FH351313451		**812324**
8FH351313461		**812320**
8FH351313531		**812225**
8FH351315291		**812410**
8FH351315331		**812335**
8FH351315341		**812285**
8FH351315461		**812338**
8FH351315471		**812339**
8FH351333001		**812277**
8FH351333011		**812274**
8FH351333031		**812332**
8FH351333041		**812364**
8FH351333061		**812361**
8FK351102001		**699102**
8FK351102001		**699602**
8FK351102011		**699071**
8FK351102011		**699571**
8FK351102051		**699077**
8FK351102051		**699577**
8FK351102071		**699073**
8FK351102071		**699573**
8FK351102121		**813159**
8FK351102171		**699070**
8FK351102171		**699570**
8FK351102191		**699566**
8FK351102561		**699574**
8FK351102571		**699073**
8FK351102571		**699573**
8FK351107061		**699552**
8FK351107561		**699552**
8FK351107611		**699552**
8FK351108031		**699688**
8FK351108071		**699376**
8FK351108081		**699653**
8FK351108101		**699051**
8FK351108101		**699551**
8FK351108121		**699322**
8FK351108121		**699822**
8FK351108141		**699320**
8FK351108151		**813151**
8FK351108171		**699321**
8FK351108211		**699105**
8FK351108211		**699605**
8FK351108251		**699324**
8FK351108251		**699824**
8FK351108371		**699695**
8FK351108531		**699688**
8FK351108751		**699324**
8FK351109001		**699569**
8FK351109041		**699650**
8FK351109051		**699166**
8FK351109051		**699259**
8FK351109051		**699666**
8FK351109061		**699260**
8FK351109061		**699263**
8FK351109061		**699753**
8FK351109221		**699261**
8FK351109261		**699262**
8FK351109501		**699569**
8FK351109541		**699650**

OE IAM	PROD	Valeo
BEHR HELLA (.../...)		
8FK351109551		**699166**
8FK351109551		**699259**
8FK351109551		**699666**
8FK351109561		**699260**
8FK351109561		**699263**
8FK351109721		**699261**
8FK351109761		**699262**
8FK351110091		**699148**
8FK351110091		**699648**
8FK351110111		**699105**
8FK351110111		**699604**
8FK351110131		**699051**
8FK351110131		**699551**
8FK351110211		**699300**
8FK351110221		**813173**
8FK351110241		**699372**
8FK351110241		**699383**
8FK351110591		**699148**
8FK351110591		**699322**
8FK351110591		**699648**
8FK351110611		**699105**
8FK351110611		**699604**
8FK351110611		**699605**
8FK351110631		**699051**
8FK351110631		**699551**
8FK351110711		**699300**
8FK351110721		**699145**
8FK351110801		**699297**
8FK351110861		**813196**
8FK351110881		**699381**
8FK351110881		**813150**
8FK351111021		**813653**
8FK351111021		**813654**
8FK351111521		**813653**
8FK351111521		**813654**
8FK351111521		**813655**
8FK351113081		**699119**
8FK351113081		**699619**
8FK351113101		**699209**
8FK351113131		**813606**
8FK351113191		**699127**
8FK351113191		**699627**
8FK351113211		**699048**
8FK351113211		**699548**
8FK351113231		**699047**
8FK351113231		**699547**
8FK351113241		**699128**
8FK351113241		**699628**
8FK351113281		**699330**
8FK351113281		**699830**
8FK351113301		**699120**
8FK351113301		**699620**
8FK351113311		**699326**
8FK351113311		**699826**
8FK351113361		**699127**
8FK351113361		**699627**
8FK351113371		**699840**
8FK351113381		**699337**
8FK351113381		**699837**
8FK351113391		**699327**

OE IAM	PROD	Valeo
BEHR HELLA (.../...)		
8FK351113391		**699827**
8FK351113401		**699328**
8FK351113401		**699828**
8FK351113411		**699336**
8FK351113411		**699836**
8FK351113421		**699335**
8FK351113441		**813203**
8FK351113451		**813202**
8FK351113561		**699205**
8FK351113581		**699119**
8FK351113581		**699619**
8FK351113601		**699209**
8FK351113691		**699127**
8FK351113691		**699627**
8FK351113711		**699048**
8FK351113711		**699548**
8FK351113731		**699047**
8FK351113731		**699547**
8FK351113741		**699128**
8FK351113741		**699628**
8FK351113781		**699330**
8FK351113811		**699326**
8FK351113811		**699826**
8FK351113901		**699328**
8FK351113901		**699828**
8FK351114021		**699290**
8FK351114021		**699675**
8FK351114031		**699289**
8FK351114041		**813171**
8FK351114051		**699374**
8FK351114061		**699283**
8FK351114141		**699373**
8FK351114511		**813628**
8FK351114521		**699290**
8FK351114531		**699289**
8FK351114551		**699374**
8FK351114561		**699283**
8FK351114571		**699279**
8FK351114581		**699286**
8FK351114601		**813220**
8FK351119001		**699618**
8FK351119021		**699506**
8FK351119051		**699518**
8FK351119091		**699310**
8FK351119101		**699517**
8FK351119151		**699152**
8FK351119151		**699652**
8FK351119161		**699598**
8FK351119181		**699514**
8FK351119191		**699147**
8FK351119201		**699524**
8FK351119241		**699028**
8FK351119241		**699528**
8FK351119271		**813012**
8FK351119321		**813013**
8FK351119341		**813019**
8FK351119351		**813016**
8FK351119351		**813017**
8FK351119361		**813022**
8FK351119681		**699514**

OE IAM	PROD	Valeo
BEHR HELLA (.../...)		
8FK351121021		**699312**
8FK351125071		**699522**
8FK351125571		**699522**
8FK351126081		**699023**
8FK351126081		**699523**
8FK351126091		**699088**
8FK351126091		**699534**
8FK351126091		**699588**
8FK351126111		**699003**
8FK351126111		**699057**
8FK351126111		**699557**
8FK351126121		**699502**
8FK351126121		**699543**
8FK351126131		**699092**
8FK351126131		**699592**
8FK351126141		**699003**
8FK351126151		**699114**
8FK351126161		**699079**
8FK351126161		**699579**
8FK351126251		**699581**
8FK351126251		**699646**
8FK351126261		**699501**
8FK351126301		**699660**
8FK351126321		**699596**
8FK351126331		**699088**
8FK351126331		**699534**
8FK351126331		**699588**
8FK351126351		**699345**
8FK351126361		**699020**
8FK351126361		**699520**
8FK351126401		**699144**
8FK351126401		**699644**
8FK351126421		**699145**
8FK351126421		**699611**
8FK351126491		**699275**
8FK351126491		**699775**
8FK351126591		**699088**
8FK351126591		**699588**
8FK351126611		**699057**
8FK351126631		**699092**
8FK351126641		**699003**
8FK351126651		**699114**
8FK351126661		**699079**
8FK351126821		**699596**
8FK351126851		**699345**
8FK351126861		**699020**
8FK351126861		**699520**
8FK351126901		**699144**
8FK351126901		**699644**
8FK351126941		**699301**
8FK351126941		**699769**
8FK351126961		**699275**
8FK351126961		**699775**
8FK351126971		**699896**
8FK351126981		**699376**
8FK351126991		**699320**
8FK351127011		**813200**
8FK351127011		**813700**
8FK351127021		**699013**
8FK351127021		**699115**

OE IAM	PROD	Valeo
BEHR HELLA (.../...)		
8FK351127021		**699513**
8FK351127041		**699026**
8FK351127041		**699526**
8FK351127051		**699059**
8FK351127051		**699559**
8FK351127061		**699045**
8FK351127061		**699545**
8FK351127071		**699166**
8FK351127071		**699259**
8FK351127071		**699666**
8FK351127081		**699236**
8FK351127081		**699736**
8FK351127081		**699743**
8FK351127111		**699107**
8FK351127111		**699607**
8FK351127121		**699507**
8FK351127131		**813680**
8FK351127151		**699220**
8FK351127151		**699720**
8FK351127171		**699222**
8FK351127171		**699722**
8FK351127211		**699094**
8FK351127211		**699594**
8FK351127221		**699220**
8FK351127221		**699720**
8FK351127231		**699175**
8FK351127231		**699675**
8FK351127241		**699093**
8FK351127241		**699593**
8FK351127251		**699012**
8FK351127251		**699512**
8FK351127261		**699306**
8FK351127261		**699308**
8FK351127261		**699806**
8FK351127261		**699808**
8FK351127271		**699109**
8FK351127271		**699609**
8FK351127291		**699025**
8FK351127291		**699525**
8FK351127301		**699174**
8FK351127301		**699674**
8FK351127331		**699115**
8FK351127331		**699615**
8FK351127341		**699305**
8FK351127361		**699106**
8FK351127361		**699606**
8FK351127371		**699199**
8FK351127371		**699699**
8FK351127381		**813200**
8FK351127381		**813700**
8FK351127391		**699303**
8FK351127401		**699218**
8FK351127401		**699718**
8FK351127411		**699191**
8FK351127411		**699691**
8FK351127421		**699315**
8FK351127431		**699161**
8FK351127431		**699661**
8FK351127451		**699039**
8FK351127451		**699539**

OE IAM	PROD	Valeo
BEHR HELLA (.../...)		
8FK351127461		**699311**
8FK351127471		**699314**
8FK351127481		**813200**
8FK351127481		**813700**
8FK351127491		**699272**
8FK351127491		**699772**
8FK351127511		**813200**
8FK351127511		**813700**
8FK351127521		**699115**
8FK351127541		**699026**
8FK351127541		**699526**
8FK351127551		**699059**
8FK351127551		**699559**
8FK351127561		**699045**
8FK351127561		**699545**
8FK351127571		**699166**
8FK351127581		**699236**
8FK351127581		**699736**
8FK351127581		**699743**
8FK351127611		**699107**
8FK351127611		**699607**
8FK351127621		**699507**
8FK351127661		**699016**
8FK351127661		**699115**
8FK351127661		**699615**
8FK351127671		**699222**
8FK351127671		**699722**
8FK351127681		**699152**
8FK351127711		**699094**
8FK351127731		**699175**
8FK351127731		**699675**
8FK351127761		**699306**
8FK351127771		**699109**
8FK351127791		**699025**
8FK351127791		**699525**
8FK351127801		**699174**
8FK351127841		**699305**
8FK351127861		**699106**
8FK351127861		**699606**
8FK351127871		**699199**
8FK351127871		**699699**
8FK351127891		**699303**
8FK351127901		**699218**
8FK351127901		**699718**
8FK351127911		**699191**
8FK351127911		**699691**
8FK351127921		**699315**
8FK351127931		**699161**
8FK351127931		**699661**
8FK351127951		**699039**
8FK351127971		**699314**
8FK351127981		**813200**
8FK351127991		**699272**
8FK351127991		**699772**
8FK351128001		**699212**
8FK351128031		**699015**
8FK351128031		**699515**
8FK351128041		**699307**
8FK351128041		**699807**
8FK351128051		**813158**

OE IAM	PROD	Valeo
BEHR HELLA (.../...)		
8FK351128091		**699347**
8FK351128541		**699307**
8FK351128551		**813158**
8FK351128551		**813812**
8FK351128551		**813819**
8FK351128551		**813820**
8FK351128591		**699347**
8FK351129091		**699284**
8FK351129101		**699280**
8FK351129591		**699175**
8FK351129591		**699283**
8FK351129591		**699284**
8FK351129591		**699675**
8FK351129601		**699280**
8FK351131011		**699546**
8FK351131511		**699546**
8FK351132081		**813166**
8FK351132161		**699193**
8FK351132161		**699693**
8FK351132591		**699767**
8FK351132751		**699537**
8FK351132781		**699589**
8FK351133021		**699727**
8FK351133031		**699730**
8FK351133341		**699728**
8FK351133371		**699725**
8FK351133391		**699729**
8FK351133401		**699731**
8FK351133451		**699264**
8FK351134061		**699072**
8FK351134061		**699572**
8FK351134091		**699102**
8FK351134091		**699250**
8FK351134091		**699602**
8FK351134091		**699750**
8FK351134101		**699251**
8FK351134101		**699751**
8FK351134111		**699157**
8FK351134111		**699657**
8FK351134121		**699143**
8FK351134121		**699643**
8FK351134131		**699155**
8FK351134131		**699655**
8FK351134141		**699313**
8FK351134161		**699190**
8FK351134161		**699690**
8FK351134171		**699316**
8FK351134201		**699540**
8FK351134211		**699597**
8FK351134231		**699306**
8FK351134231		**699307**
8FK351134231		**699806**
8FK351134261		**699270**
8FK351134261		**699770**
8FK351134271		**699391**
8FK351134281		**699898**
8FK351134291		**699317**
8FK351134291		**699817**
8FK351134301		**699318**
8FK351134301		**699818**

OE IAM	PROD	Valeo
BEHR HELLA (.../...)		
8FK351134311		**699355**
8FK351134311		**699855**
8FK351134321		**699366**
8FK351134331		**699241**
8FK351134331		**699741**
8FK351134331		**813189**
8FK351134331		**813689**
8FK351134331		**813824**
8FK351134381		**699197**
8FK351134381		**699697**
8FK351134391		**699240**
8FK351134391		**699740**
8FK351134401		**699075**
8FK351134401		**699575**
8FK351134411		**699076**
8FK351134411		**699568**
8FK351134431		**699241**
8FK351134431		**699741**
8FK351134451		**699246**
8FK351134451		**699746**
8FK351134591		**699250**
8FK351134591		**699750**
8FK351134611		**699157**
8FK351134611		**699657**
8FK351134621		**699143**
8FK351134621		**699643**
8FK351134631		**699155**
8FK351134631		**699655**
8FK351134661		**699190**
8FK351134661		**699690**
8FK351134671		**699316**
8FK351134731		**699306**
8FK351134731		**699806**
8FK351134761		**699270**
8FK351134761		**699770**
8FK351134791		**699317**
8FK351134811		**699355**
8FK351134831		**813189**
8FK351134831		**813689**
8FK351134851		**699239**
8FK351134851		**699739**
8FK351134881		**699197**
8FK351134881		**699697**
8FK351134891		**699240**
8FK351134891		**699740**
8FK351134911		**699076**
8FK351134911		**699568**
8FK351134921		**813816**
8FK351134931		**699241**
8FK351134941		**699698**
8FK351134951		**699246**
8FK351134951		**699746**
8FK351135041		**699246**
8FK351135041		**699746**
8FK351135091		**813633**
8FK351135141		**813014**
8FK351135161		**813025**
8FK351135171		**813007**
8FK351135201		**813023**
8FK351135261		**813032**

OE IAM	PROD	Valeo
BEHR HELLA (.../...)		
8FK351135281		**813600**
8FK351135291		**813605**
8FK351135301		**699862**
8FK351135311		**813602**
8FK351135321		**813602**
8FK351135331		**813601**
8FK351135341		**813222**
8FK351135341		**813825**
8FK351135361		**813828**
8FK351135371		**813132**
8FK351135371		**813632**
8FK351135371		**813634**
8FK351135391		**813635**
8FK351135401		**699862**
8FK351135631		**813601**
8FK351135651		**699101**
8FK351135651		**699599**
8FK351135781		**813605**
8FK351135801		**699862**
8FK351135811		**813602**
8FK351135821		**813602**
8FK351135831		**813601**
8FK351175011		**699298**
8FK351175011		**699798**
8FK351175021		**699299**
8FK351175511		**699298**
8FK351175511		**699798**
8FK351175521		**699299**
8FK351175531		**699346**
8FK351176001		**699323**
8FK351176001		**699823**
8FK351176011		**699321**
8FK351176501		**699321**
8FK351273091		**813169**
8FK351316001		**699078**
8FK351316011		**699216**
8FK351316011		**699716**
8FK351316021		**699234**
8FK351316021		**699240**
8FK351316021		**699734**
8FK351316021		**699740**
8FK351316031		**699358**
8FK351316031		**699858**
8FK351316041		**813638**
8FK351316061		**699359**
8FK351316071		**813202**
8FK351316081		**813203**
8FK351316101		**699351**
8FK351316111		**699352**
8FK351316121		**699353**
8FK351316131		**699349**
8FK351316131		**813718**
8FK351316131		**813726**
8FK351316141		**699357**
8FK351316151		**699221**
8FK351316151		**699721**
8FK351316161		**813162**
8FK351316181		**699115**
8FK351316181		**699615**
8FK351316181		**813200**

OE IAM	PROD	Valeo
BEHR HELLA (.../...)		
8FK351316181		**813700**
8FK351316251		**813682**
8FK351316271		**813195**
8FK351316291		**813157**
8FK351316361		**813685**
8FK351316371		**813161**
8FK351316371		**813714**
8FK351316371		**813719**
8FK351316381		**813163**
8FK351316381		**813663**
8FK351316381		**813725**
8FK351316391		**813164**
8FK351316391		**813664**
8FK351316391		**813724**
8FK351316411		**813132**
8FK351316411		**813632**
8FK351316421		**813131**
8FK351316421		**813165**
8FK351316421		**813631**
8FK351316431		**699237**
8FK351316431		**699737**
8FK351316441		**813627**
8FK351316451		**813810**
8FK351316501		**699078**
8FK351316521		**699234**
8FK351316521		**699240**
8FK351316521		**699734**
8FK351316521		**699740**
8FK351316651		**699221**
8FK351316701		**699202**
8FK351316711		**699016**
8FK351316711		**699201**
8FK351316711		**699516**
8FK351316711		**699701**
8FK351316741		**699036**
8FK351316741		**699536**
8FK351316811		**699641**
8FK351316831		**813190**
8FK351316841		**699381**
8FK351316991		**699372**
8FK351316991		**699383**
8FK351322011		**699357**
8FK351322021		**699392**
8FK351322031		**699393**
8FK351322031		**699893**
8FK351322041		**813125**
8FK351322041		**813144**
8FK351322051		**813122**
8FK351322061		**813123**
8FK351322071		**813121**
8FK351322081		**813115**
8FK351322091		**813117**
8FK351322101		**813124**
8FK351322111		**813137**
8FK351322121		**813157**
8FK351322131		**813156**
8FK351322141		**813149**
8FK351322151		**813147**
8FK351322161		**813145**
8FK351322191		**813108**

OE IAM	PROD	Valeo
BEHR HELLA (.../...)		
8FK351322201		**813109**
8FK351322211		**813113**
8FK351322221		**813111**
8FK351322231		**813110**
8FK351322391		**813157**
8FK351322741		**699357**
8FK351322741		**699380**
8FK351322751		**813194**
8FK351322781		**699380**
8FK351334151		**813626**
8FK351334171		**813720**
8FK351334181		**699414**
8FK351334181		**699914**
8FK351334181		**813198**
8FK351334181		**813827**
8FK351334191		**813811**
8FK351334191		**813813**
8FK351340001		**699212**
8FK351340011		**813167**
8FK351340021		**813243**
8FK351340071		**699348**
8FK351340071		**699848**
8FK351340071		**813686**
8FK351340081		**813723**
8FK351340091		**813137**
8FT351192021		**508928**
8FT351192031		**508882**
8FT351192041		**508880**
8FT351192041		**508881**
8FT351192041		**508882**
8FT351192041		**509733**
8FT351192051		**509695**
8FT351192061		**509706**
8FT351192091		**508914**
8FT351192131		**508882**
8FT351192161		**508628**
8FT351192171		**508885**
8FT351192321		**508888**
8FT351192321		**509695**
8FT351192341		**509503**
8FT351192351		**509941**
8FT351192381		**509501**
8FT351192401		**509727**
8FT351195151		**508902**
8FT351195201		**508731**
8FT351195221		**508594**
8FT351195251		**508597**
8FT351195271		**508954**
8FT351195361		**508957**
8FT351195421		**508834**
8FT351195431		**508599**
8FT351195431		**509391**
8FT351195461		**508834**
8FT351195461		**508840**
8FT351195471		**508739**
8FT351195481		**509565**
8FT351195511		**508951**
8FT351195551		**508623**
8FT351195561		**508906**
8FT351195561		**508907**

OE IAM	PROD	Valeo
BEHR HELLA (.../...)		
8FT351195571		**508836**
8FT351195601		**508740**
8FT351195621		**508609**
8FT351195641		**508604**
8FT351195641		**508922**
8FT351195651		**509690**
8FT351195661		**508611**
8FT351195671		**508624**
8FT351195691		**508619**
8FT351195731		**509564**
8FT351195751		**508807**
8FT351195781		**508900**
8FT351195791		**508741**
8FT351196001		**508738**
8FT351196011		**509567**
8FT351196041		**508626**
8FT351196051		**508627**
8FT351196061		**508629**
8FT351196071		**508631**
8FT351196101		**508872**
8FT351196121		**508606**
8FT351196131		**508605**
8FT351196201		**509392**
8FT351196211		**509393**
8FT351196221		**508625**
8FT351196221		**508660**
8FT351196241		**509560**
8FT351196251		**509562**
8FT351196261		**508603**
8FT351196331		**509890**
8FT351196371		**509891**
8FT351196391		**508811**
8FT351196411		**508914**
8FT351196461		**509391**
8FT351196471		**509395**
8FT351196481		**509394**
8FT351196491		**509395**
8FT351196511		**508870**
8FT351196511		**508871**
8FT351196561		**508911**
8FT351196561		**509716**
8FT351196571		**508911**
8FT351196581		**509559**
8FT351196721		**508873**
8FT351196731		**509402**
8FT351196741		**508291**
8FT351196741		**509291**
8FT351196741		**509714**
8FT351196751		**509401**
8FT351196761		**508837**
8FT351196771		**509400**
8FT351196791		**509396**
8FT351196901		**509558**
8FT351196911		**509502**
8FT351196921		**509944**
8FT351196931		**509499**
8FT351196961		**508909**
8FT351197031		**508934**
8FT351197131		**508936**
8FT351197151		**508805**

OE IAM	PROD	Valeo
BEHR HELLA (.../...)		
8FT351197151		**509566**
8FT351197151		**509714**
8FT351197251		**509594**
8FT351197311		**509591**
8FT351197321		**509704**
8FT351197331		**508613**
8FT351197341		**508616**
8FT351197351		**508835**
8FT351197361		**509403**
8FT351197371		**508899**
8FT351197381		**509593**
8FT351197391		**509502**
8FT351197541		**509524**
8FT351197541		**509525**
8FT351197541		**509791**
8FT351197561		**508607**
8FT351197571		**509569**
8FT351197581		**509411**
8FT351197591		**509404**
8FT351197601		**509500**
8FT351197611		**509563**
8FT351197611		**509564**
8FT351197631		**509692**
8FT351197641		**509693**
8FT351197661		**509529**
8FT351197701		**509794**
8FT351197711		**509893**
8FT351197721		**509528**
8FT351197751		**508812**
8FT351197761		**509712**
8FT351197771		**509907**
8FT351197781		**509717**
8FT351197791		**509932**
8FT351198011		**508936**
8FT351198021		**508612**
8FT351198111		**509340**
8FT351198141		**509589**
8FT351198151		**509696**
8FT351198281		**508615**
8FT351198291		**508620**
8FT351198301		**508622**
8FT351198311		**508736**
8FT351198351		**508840**
8FT351198361		**508805**
8FT351198371		**508874**
8FT351198381		**508870**
8FT351198401		**508604**
8FT351198431		**509936**
8FT351198441		**509594**
8FT351198451		**509594**
8FT351198461		**509926**
8FT351198511		**508607**
8FT351198521		**509563**
8FT351198531		**509565**
8FT351198561		**509691**
8FT351198611		**509929**
8FT351198651		**508741**
8FT351198691		**509892**
8FT351198721		**509891**
8FT351198731		**509791**

OE IAM	PROD	Valeo
BEHR HELLA (.../...)		
8FT351335011		**509934**
8FT351335041		**509793**
8FT351335061		**509919**
8FT351335141		**509933**
8FV351210011		**817512**
8FV351210031		**817093**
8FV351210091		**817515**
8FV351210151		**817517**
8FV351210241		**817510**
8FV351210281		**817514**
8FV351210331		**817516**
8FV351210571		**817433**
8FV351210581		**817513**
8FV351210691		**817517**
8FV351210701		**817516**
8FV351210711		**817517**
8FV351211061		**817521**
8FV351211151		**817519**
8FV351211241		**817518**
8FV351211651		**817080**
8FZ351182001		**715004**
8UW351234031		**508690**
8UW351234111		**509409**
8UW351234161		**509682**
8UW351234171		**509851**
8UW351237041		**508635**
8UW351238021		**508690**
8UW351238021		**508698**
8UW351239001		**508694**
8UW351239021		**508643**
8UW351239071		**508642**
8UW351239071		**509409**
8UW351239081		**509488**
8UW351239081		**509490**
8UW351239081		**509491**
8UW351239111		**508694**
8UW351239111		**508696**
8UW351239111		**508697**
8UW351239111		**508704**
8UW351239111		**509687**
8UW351239151		**508637**
8UW351239151		**508642**
8UW351239181		**508643**
8UW351239191		**509492**
8UW351239211		**508703**
8UW351239221		**508644**
8UW351239231		**508646**
8UW351239241		**508639**
8UW351239241		**508641**
8UW351239241		**508648**
8UW351239241		**509688**
8UW351239251		**509679**
8UW351239261		**509680**
8UW351239271		**509797**
8UW351239281		**509796**
8UW351239291		**509798**
8UW351239301		**509681**
8UW351239311		**508645**
8UW351239311		**509409**
8UW351239321		**509688**

OE IAM	PROD	Valeo
BEHR HELLA (.../...)		
8UW351239341		**509678**
8UW351239341		**509687**
8UW351239341		**509862**
8UW351239371		**508705**
8UW351239391		**508650**
8UW351239411		**509494**
8UW351239601		**509798**
8UW351239651		**509854**
8UW351239661		**509901**
8UW351239671		**509684**
8UW351239681		**509685**
8UW351239691		**508833**
8UW351239721		**509972**
8UW351239731		**509511**
8UW351239741		**509677**
8UW351239751		**509489**
8UW351239771		**508866**
9GS351191381		**818409**
9GS351337091		**818486**
9XX009122001		**509730**
9XX009122011		**509732**
9XX009122021		**509731**
9XX009122031		**509729**
BENTLEY		
3D0819619A		**698793**
3D0819619B		**698793**
3D0898644		**698793**
3D2819619A		**698793**
3D2819620A		**698793**
4H0819439		**715733**
BMW		
1392941		**816981**
1490572		**817547**
17113400400		**817383**
64106907746		**715582**
64110008138		**698246**
64111368875		**812296**
64111373772		**812238**
64111384725		**883982**
64111385124		**715006**
64111393212		**812240**
64111393489		**698171**
64116904437		**509798**
64116906270		**812365**
64116915763		**698861**
64116915764		**698862**
64116921018		**698856**
64116921019		**698857**
64116923204		**509505**
64116927090		**509783**
64116933663		**715048**
64116933664		**715049**
64116933922		**812397**
64116934781		**818201**
64116945593		**715583**
64116945594		**715584**
64116956706		**509784**

OE IAM	PROD	Valeo
BMW (.../...)		
64116981100		**509798**
64116981454		**509679**
64118351171		**812239**
64118362851		**509681**
64118363782		**817433**
64118371459		**509679**
64118372191		**817513**
64118372493		**715007**
64118372523		**812294**
64118372771		**812318**
64118372772		**817511**
64118372773		**509796**
64118372783		**812220**
64118373175		**812362**
64118373786		**812360**
64118381504		**509797**
64118384379		**509680**
64118385558		**715007**
64118390377		**698838**
64118390447		**698470**
64118391198		**698246**
64118391277		**817512**
64118391356		**817510**
64118391362		**812238**
64118391363		**812296**
64119069895		**698171**
64119128953		**812401**
64119135745		**509798**
64119144200		**715048**
64119144201		**715049**
64119146765		**509783**
64119163328		**715715**
64119163329		**715690**
64119283497		**715719**
64311000004		**698489**
64311390836		**698170**
64316142114		**715502**
64316915763		**698861**
64316915764		**698862**
64316935822		**698863**
64316935823		**698864**
64316945585		**715583**
64316945586		**715584**
64316946628		**715503**
64316946629		**715502**
64316962548		**715502**
64318361899		**698489**
64318409043		**698775**
64318409044		**698776**
64319069926		**698470**
64319069926		**698838**
64319069927		**715685**
64319070072		**698470**
64319071933		**698469**
64319071934		**698489**
64319071935		**698750**
64319159606		**715712**
64319195193		**698861**
64319237157		**715713**
64319237158		**715714**

BMW (.../...)

OE	IAM	PROD	Valeo
64502282939			817850
64508379885			817850
64508381362			817851
64509122825			817850
64509122827			817851
64509169772			814011
64509169791			814011
64509218121			814189
64521385172			699148
64521385172			699648
64526910458			813151
64526910460			699321
64526914369			699320
64526914370			699323
64526914370			699823
64526916232			813833
64526917859			813194
64528371021			699322
64528371021			699822
64528377242			699320
64528377244			699321
64528381233			699321
64528385714			699546
64528385908			699653
64528385909			699051
64528385909			699551
64528385915			699051
64528385915			699551
64528385917			699650
64528390336			699051
64528390336			699551
64528390741			699051
64528390741			699551
64528391135			699148
64528391135			699648
64529122618			813192
64531390070			508815
64531392941			816981
64536907402			509936
64536909257			509864
64536914033			814287
64536914216			817575
64536930038			814011
64536930039			814012
64536930040			814011
64536936557			509935
64536942025			509916
64537618770			814192
64538362055			508814
64538372977			508599
64538372979			509393
64538372985			509392
64538373924			816922
64538375513			817561
64538375754			509391
64538375757			509394
64538377330			509558
64538377614			817383
64538377648			817405
64538378438			817607

BMW (.../...)

OE	IAM	PROD	Valeo
64538378439			817406
64538378683			509395
64538381543			817575
64538390971			508817
64538391313			508599
64538391639			508818
64538391647			817248
64539141957			509864
64539169526			814012
64539218122			814190
64539218123			814191
64539218123			814191
64118385558			715007
64118385560			515131
64319142114			715502
64509239992			814367
64536972553			814367

BOSCH

1235522053		698594
1423429008		698175
1987431001		698169
1987431002		698171
1987431003		698197
1987431005		698199
1987431006		698201
1987431007		698203
1987431008		698815
1987431009		698149
1987431009		698276
1987431010		698165
1987431012		698159
1987431012		698160
1987431013		698163
1987431014		698174
1987431015		698166
1987431016		698167
1987431017		698164
1987431018		698168
1987431019		698198
1987431021		698146
1987431022		698235
1987431027		698173
1987431028		698247
1987431030		698202
1987431031		715645
1987431032		698170
1987431034		698177
1987431035		698169
1987431036		698489
1987431037		698475
1987431038		698663
1987431038		698708
1987431039		698255
1987431040		698662
1987431042		698858
1987431043		698840
1987431045		698487
1987431046		698172
1987431048		698488

BOSCH (.../...)

1987431049		698290
1987431052		698712
1987431053		698869
1987431054		698680
1987431055		698196
1987431057		698685
1987431058		698707
1987431059		698454
1987431060		715530
1987431061		698279
1987431062		698770
1987431063		698769
1987431064		698771
1987431066		698773
1987431070		698700
1987431071		698606
1987431072		698535
1987431073		698779
1987431075		698734
1987431076		698711
1987431082		698724
1987431084		698681
1987431085		698796
1987431090		698276
1987431092		698870
1987431095		698878
1987431096		715514
1987431102		698863
1987431103		698856
1987431106		698866
1987431111		698876
1987431113		715510
1987431300		698716
1987431301		698697
1987431303		698687
1987431307		698748
1987431312		698686
1987431324		698606
1987431328		698696
1987431333		698684
1987431335		698697
1987431336		698750
1987431337		698744
1987431345		698695
1987431346		698778
1987431357		698739
1987431360		698688
1987431361		698246
1987431362		698470
1987431364		698777
1987431365		698867
1987431366		698746
1987431370		698743
1987431371		698683
1987431373		698745
1987431376		698710
1987431377		698692
1987431378		698774
1987431379		698714
1987431380		698715

OE	IAM	PROD	Valeo
BOSCH (.../...)			
1987431382			**698725**
1987431386			**698747**
1987431387			**698693**
1987431398			**698541**
1987431399			**698713**
1987431401			**698723**
1987431402			**698864**
1987431409			**698883**
1987431410			**715507**
1987431411			**698877**
1987431412			**698884**
1987431413			**715511**
1987431551			**715516**
1987431552			**698889**
1987431554			**715591**
1987431557			**698887**
1987431562			**715536**
1987431565			**715699**
1987431568			**715566**
1987431571			**715535**
1987431953			**715550**
1987432001			**698169**
1987432004			**715658**
1987432006			**715617**
1987432009			**698149**
1987432012			**698159**
1987432020			**715531**
1987432024			**715683**
1987432026			**698819**
1987432027			**698173**
1987432034			**715603**
1987432037			**698475**
1987432040			**698709**
1987432040			**698874**
1987432041			**715646**
1987432043			**698840**
1987432044			**715577**
1987432049			**698290**
1987432051			**715684**
1987432056			**698794**
1987432058			**698707**
1987432061			**698276**
1987432061			**715685**
1987432065			**715636**
1987432066			**698773**
1987432068			**698861**
1987432069			**698512**
1987432070			**698700**
1987432077			**698731**
1987432078			**715649**
1987432079			**698664**
1987432081			**698702**
1987432083			**698657**
1987432085			**715619**
1987432087			**698694**
1987432088			**698795**
1987432089			**698177**
1987432090			**698279**
1987432091			**698738**
1987432093			**698730**

OE	IAM	PROD	Valeo
BOSCH (.../...)			
1987432094			**698736**
1987432095			**698878**
1987432097			**698800**
1987432100			**715562**
1987432103			**698857**
1987432105			**698860**
1987432107			**698691**
1987432108			**698690**
1987432109			**698882**
1987432113			**715627**
1987432114			**715581**
1987432115			**698886**
1987432118			**715575**
1987432119			**715549**
1987432120			**698753**
1987432124			**715502**
1987432132			**715662**
1987432133			**715532**
1987432134			**715543**
1987432137			**715554**
1987432148			**715694**
1987432154			**715589**
1987432155			**715565**
1987432156			**715668**
1987432157			**715688**
1987432158			**715517**
1987432159			**715572**
1987432160			**715529**
1987432161			**715525**
1987432162			**715664**
1987432163			**698892**
1987432164			**715524**
1987432164			**715666**
1987432167			**715594**
1987432169			**715598**
1987432170			**715521**
1987432171			**715588**
1987432172			**715698**
1987432175			**698859**
1987432176			**715523**
1987432182			**698879**
1987432183			**715615**
1987432184			**715534**
1987432188			**715552**
1987432188			**715553**
1987432189			**715515**
1987432192			**698762**
1987432193			**715633**
1987432194			**715520**
1987432195			**698871**
1987432197			**715538**
1987432198			**698540**
1987432203			**715540**
1987432205			**715597**
1987432207			**715528**
1987432208			**715513**
1987432210			**698799**
1987432211			**715618**
1987432213			**715601**
1987432213			**715602**

OE	IAM	PROD	Valeo
BOSCH (.../...)			
1987432214			**715644**
1987432215			**715660**
1987432218			**715626**
1987432219			**715583**
1987432220			**698735**
1987432221			**715564**
1987432222			**715654**
1987432225			**698176**
1987432227			**715541**
1987432228			**715616**
1987432234			**715692**
1987432235			**715518**
1987432236			**715609**
1987432238			**715559**
1987432240			**715697**
1987432270			**698701**
1987432296			**715585**
1987432296			**715586**
1987432301			**698697**
1987432304			**715659**
1987432306			**715617**
1987432309			**715544**
1987432310			**715632**
1987432311			**715635**
1987432315			**715690**
1987432317			**715578**
1987432318			**715674**
1987432319			**715641**
1987432324			**698682**
1987432326			**715600**
1987432327			**715647**
1987432328			**698696**
1987432330			**715675**
1987432337			**698744**
1987432348			**698749**
1987432354			**715612**
1987432362			**698838**
1987432363			**715676**
1987432364			**698777**
1987432364			**698778**
1987432365			**698839**
1987432367			**698791**
1987432368			**698862**
1987432369			**715580**
1987432370			**698743**
1987432371			**698683**
1987432380			**698715**
1987432381			**698741**
1987432393			**715539**
1987432394			**715610**
1987432397			**698801**
1987432400			**698737**
1987432405			**715702**
1987432406			**715613**
1987432406			**715614**
1987432410			**715507**
1987432413			**715628**
1987432415			**715661**
1987432416			**715623**
1987432416			**715630**

OE IAM	PROD	Valeo
BOSCH (.../...)		
1987432419		**715584**
1987432422		**715501**
1987432423		**698792**
1987432424		**715503**
1987432425		**698776**
1987432426		**715546**
1987432428		**715505**
1987432431		**698768**
1987432433		**715533**
1987432434		**698802**
1987432435		**715682**
1987432436		**715556**
1987432436		**715557**
1987432437		**715555**
1987432464		**715512**
1987432468		**715542**
1987432482		**698880**
1987432495		**698872**
1987432497		**698865**
1987432498		**715509**
1987432499		**715608**
1987432500		**715607**
1987432512		**698740**
1987432533		**698772**
1987432597		**715665**
2914551117		**698817**
0986477134		**715500**
0986AF4002		**715526**
0986AF4003		**715700**
0986AF4008		**715522**
0986AF4009		**715521**
0986AF4010		**698895**
0986AF4011		**715624**
0986AF4099		**715643**
0986AF4151		**698888**
0986AF4163		**715592**
0986AF4186		**715639**
0986AF4187		**715669**
0986AF4189		**715638**
0986AF5008		**715679**
0986AF5028		**715631**
0986AF5164		**715620**
0986AF5169		**715574**
0986AF5403		**715653**
0986AF5415		**698891**
0986AF5431		**698800**
0986AF5432		**698801**
0986AF5433		**715501**
CADILLAC		
9194851		**812126**
88957450		**715671**
90535131		**698711**
CHEVROLET		
13271190		**715658**
13271191		**715659**
52420930		**715659**
52420938		**715658**

OE IAM	PROD	Valeo
CHEVROLET (.../...)		
52425938		**715658**
93740495		**715536**
95215156		**715710**
95947238		**715707**
96296618		**715587**
96327366		**715587**
96337653		**715587**
96406680		**813373**
96425700		**715588**
96435888		**715535**
96539649		**715535**
96554421		**715526**
96629614		**715654**
96800069		**715654**
96800069		**715654**
96800837		**715526**
96830504		**715535**
96832648		**715536**
22753219		**715731**
96591582		**814358**
EC93740495		**715536**
EC96331028		**715536**
CHRYSLER		
4596172		**508895**
4644365		**817015**
4644365		**817015**
4644366		**817015**
4644708		**812049**
4662589		**817073**
4677138		**508898**
4677344		**699145**
4682589		**817073**
4682591		**817074**
4682592		**508899**
4720743		**699624**
4723320		**699145**
4741218		**816991**
4758305		**817075**
4798015		**816945**
4809227		**817477**
5017405		**817445**
5017621		**817475**
36002432		**508965**
82205905		**698865**
2108301218		**698697**
04596501AB		**715648**
05058040AA		**715534**
05072262AA		**817582**
05142490AA		**817739**
4596501AB		**715648**
4677144AB		**813831**
4809129AA		**814290**
4809227AD		**817477**
5011078AA		**812049**
5011395AA		**816991**
5017441AA		**509549**
50580040AA		**715534**
5058693AA		**715735**
5072176AA		**715611**

OE IAM	PROD	Valeo
CHRYSLER (.../...)		
5072262AA		**817582**
5101438AA		**698697**
5101439AA		**698697**
5137694AA		**509937**
5142490AA		**817739**
5278724AA		**813228**
68042866AA		**715711**
B66809901		**698697**
CITROËN		
644178		**698032**
644195		**698046**
644196		**698044**
644764		**509226**
644848		**812023**
644862		**812337**
644872		**812016**
644878		**812005**
644880		**812006**
644889		**812037**
646063		**818516**
646191		**508694**
647904		**715570**
647945		**715635**
648708		**813223**
648714		**813317**
648722		**813317**
1854146		**699393**
1854146		**699893**
75513460		**883520**
75515461		**883468**
95230684		**812002**
95495316		**812036**
95568630		**508690**
95667961		**698042**
95667962		**698040**
95667986		**698146**
95667989		**508639**
96090004		**812016**
96096846		**816803**
96143907		**509483**
96189239		**817230**
9626925180		**817230**
9639078280		**699858**
9650545980		**818171**
9650631680		**818171**
9682603680		**715635**
6,441E+12		**698041**
27277CL025H		**715631**
6441F3		**698038**
6441G6		**698195**
6441G9		**715589**
6441J4		**698328**
6441J5		**698327**
6441K4		**698326**
6441K5		**698327**
6441K6		**698325**
6441K7		**698575**
6441K8		**698529**
6441L2		**509355**

OE IAM	PROD	Valeo
CITROËN (.../...)		
6441L3		**698045**
6441N3		**698326**
6441N6		**698538**
6441N7		**698539**
6441Q5		**698675**
6441Q6		**698676**
6441Q7		**509509**
6441Q8		**509510**
6441S0		**715053**
6441T6		**509351**
6441V0		**715221**
6441V1		**715068**
6441V2		**715069**
6444C4		**817085**
6445AZ		**508777**
6445EQ		**509220**
6445G4		**509219**
6445HZ		**509356**
6445K1		**508761**
6445P9		**508782**
6445PT		**812235**
6445R8		**508762**
6445S4		**508784**
6447EL		**509357**
6447FF		**698680**
6447FG		**698731**
6447H0		**715530**
6447H1		**715530**
6447HP		**698657**
6447HS		**509354**
6447HT		**698540**
6447HV		**698541**
6447J0		**698858**
6447LN		**715612**
6447LZ		**698738**
6447NQ		**509507**
6447NR		**509508**
6447NT		**698664**
6447NV		**698714**
6447SP		**715558**
6447SQ		**715629**
6447SR		**715677**
6447SY		**698858**
6447TC		**698884**
6447TK		**509964**
6447TV		**715515**
6447XF		**715554**
6447XG		**715555**
6447YC		**715636**
6447YK		**715613**
6447YN		**715614**
6447Z4		**698146**
6447ZY		**715631**
6448A7		**812116**
6448C8		**812044**
6448F9		**812141**
6448G3		**812221**
6448H8		**812358**
6448J8		**812215**
6448K9		**812234**

OE IAM	PROD	Valeo
CITROËN (.../...)		
6450SN		**715067**
6453AQ		**699155**
6453AQ		**699655**
6453AX		**699106**
6453AX		**699606**
6453CL		**699199**
6453CL		**699699**
6453CN		**699190**
6453CN		**699690**
6453EN		**699216**
6453EN		**699716**
6453FE		**699236**
6453FE		**699736**
6453FH		**817464**
6453FP		**817465**
6453FS		**699237**
6453FS		**699737**
6453FZ		**699518**
6453GA		**699236**
6453GA		**699736**
6453GC		**699526**
6453GE		**699520**
6453GF		**699155**
6453GF		**699655**
6453GH		**699527**
6453GJ		**699525**
6453GK		**699523**
6453GN		**699522**
6453GP		**699106**
6453GP		**699606**
6453GQ		**699028**
6453GQ		**699528**
6453GY		**699603**
6453JA		**817375**
6453JF		**699699**
6453JG		**699190**
6453JG		**699690**
6453JH		**699216**
6453JH		**699716**
6453JJ		**813814**
6453JK		**699237**
6453JK		**699737**
6453JL		**813189**
6453JL		**813689**
6453JP		**699738**
6453JP		**813189**
6453JQ		**699772**
6453KS		**813189**
6453KS		**813689**
6453KW		**699358**
6453KW		**699858**
6453KY		**813805**
6453KZ		**813806**
6453L5		**699236**
6453LA		**699358**
6453LA		**699858**
6453LF		**813189**
6453LF		**813689**
6453LH		**813189**
6453LH		**813689**

OE IAM	PROD	Valeo
CITROËN (.../...)		
6453LQ		**699272**
6453LQ		**699772**
6453LR		**699272**
6453LR		**699772**
6453LY		**813815**
6453N1		**699026**
6453N1		**699526**
6453NJ		**813804**
6453NK		**813158**
6453NR		**813808**
6453NV		**699529**
6453P5		**699023**
6453P5		**699523**
6453P9		**699020**
6453P9		**699520**
6453PN		**699351**
6453PP		**699352**
6453PQ		**699349**
6453PR		**699353**
6453Q2		**699025**
6453QE		**813824**
6453QF		**813824**
6453QG		**813317**
6453QH		**813809**
6453QJ		**813223**
6453QL		**813162**
6453QL		**813162**
6453QN		**813662**
6453QP		**813164**
6453QP		**813164**
6453QQ		**813664**
6453QW		**813810**
6453RA		**699351**
6453RE		**699352**
6453RG		**699349**
6453RJ		**699392**
6453RK		**699393**
6453RK		**699893**
6453RS		**813713**
6453RT		**813713**
6453RV		**813161**
6453SH		**699353**
6453SN		**813163**
6453T0		**699028**
6453T0		**699528**
6453TC		**813811**
6453TE		**699272**
6453TE		**699772**
6453TG		**813158**
6453TH		**813812**
6453TN		**813716**
6453V5		**816803**
6453V6		**508835**
6453VC		**813813**
6453VE		**813813**
6453VK		**813715**
6453WL		**813723**
6453WP		**813729**
6453WQ		**813731**
6453WR		**813731**

OE IAM	PROD	Valeo
CITROËN (.../...)		
6453WW		**813163**
6453XC		**813726**
6453XF		**813725**
6453XG		**813730**
6453XJ		**813317**
6453XK		**813817**
6453XN		**813719**
6453XX		**813721**
6453Y5		**508836**
6453YA		**813727**
6453YC		**813727**
6453YF		**813717**
6453YK		**813820**
6453YN		**813821**
6453YP		**813819**
6453YW		**813322**
6453YX		**813822**
6453YZ		**813728**
6453Z0		**508840**
6453ZZ		**813223**
6455AA		**817524**
6455AC		**817526**
6455AE		**509795**
6455AG		**817655**
6455AH		**509791**
6455AJ		**509525**
6455AK		**509524**
6455AL		**814095**
6455AP		**817579**
6455AQ		**817668**
6455AS		**817667**
6455AT		**817508**
6455AV		**817230**
6455AW		**817229**
6455CF		**509705**
6455CG		**818018**
6455CH		**818000**
6455CJ		**818001**
6455CN		**814080**
6455CP		**817824**
6455CV		**817508**
6455CX		**818170**
6455CY		**818171**
6455CZ		**814095**
6455EC		**814081**
6455EE		**818014**
6455EF		**818013**
6455EK		**818015**
6455EL		**814095**
6455EP		**814069**
6455EQ		**814085**
6455ES		**814366**
6455ET		**814095**
6455EW		**818171**
6455EY		**817740**
6455FA		**814315**
6455FW		**814065**
6455FX		**817824**
6455GH		**818170**
6455GK		**818171**

OE IAM	PROD	Valeo
CITROËN (.../...)		
6455GZ		**814173**
6455HF		**818015**
6455HS		**814366**
6455HV		**814363**
6455L1		**509483**
6455P8		**508738**
6455Q4		**508837**
6455Q7		**508741**
6455Q9		**817230**
6455R0		**817230**
6455R1		**508597**
6455R3		**816835**
6455T2		**509484**
6455T3		**818191**
6455V0		**816964**
6455V1		**508870**
6455V8		**816984**
6455W2		**817229**
6455X4		**508871**
6455X5		**509865**
6455X7		**509402**
6455X8		**508873**
6455X9		**817283**
6455Y0		**817283**
6455Y1		**817375**
6455Y2		**817042**
6455Y3		**816852**
6455Y6		**816850**
6455Z0		**509689**
6455Z1		**817655**
6455Z4		**509401**
6455Z7		**817655**
6457QA		**818429**
6457S5		**818430**
6457TW		**818440**
6457WZ		**818444**
6457YL		**818409**
6457ZX		**818443**
6461A1		**508697**
6461A3		**508696**
6461C0		**817080**
6461F6		**508651**
6461F7		**508695**
6461G1		**508703**
6461G3		**508645**
6461G5		**509409**
6461G9		**509854**
6461H2		**508705**
6461H3		**508649**
6461H7		**509854**
6461H9		**509511**
6461J0		**509851**
6461J2		**508694**
6461J7		**509969**
6461K0		**509965**
6461K3		**509968**
6461K9		**509966**
6479C9		**715636**
6479E5		**715515**
6479E9		**715623**

OE IAM	PROD	Valeo
CITROËN (.../...)		
7812A030		**814315**
7812A204		**814315**
80110SMGE02		**814315**
999M1VP001		**715631**
999M1VP051		**715631**
B72005M000		**715631**
B727AZ5003		**715631**
COOPERS		
ACE003		**698165**
ACE004		**698146**
ACE005		**698164**
ACE006		**698159**
ACE008		**698166**
ACE009		**698199**
ACE010		**698169**
ACE012		**698203**
ACE015		**698149**
ACE015		**698738**
ACE016		**698247**
ACE017		**698201**
ACE020		**698202**
ACE021		**698235**
ACE023		**698171**
ACE024		**698174**
ACE026		**698197**
ACE027		**698198**
ACE028		**698167**
ACE029		**698276**
ACE032		**715531**
ACE033		**698770**
ACE034		**698475**
ACE035		**698723**
ACE036		**698487**
ACE0372		**698290**
ACE039		**715632**
ACE040		**698682**
ACE041		**698697**
ACE042		**698696**
ACE043		**715675**
ACE047		**698716**
ACE048		**698686**
ACE054		**698731**
ACE055		**698255**
ACE056		**715578**
ACE057		**698454**
ACE058		**715577**
ACE061		**698170**
ACE062		**698173**
ACE063		**698196**
ACE064		**698663**
ACE065		**698662**
ACE067		**715530**
ACE068		**698840**
ACE069		**698488**
ACE070		**698773**
ACE071		**698769**
ACE072		**698707**
ACE073		**698680**
ACE076		**698681**

OE IAM	PROD	Valeo
COOPERS (.../...)		
ACE077		**698762**
ACE079		**698879**
ACE080		**715617**
ACE082		**715565**
ACE083		**698693**
ACE085		**715598**
ACE086		**698710**
ACE087		**698606**
ACE088		**698724**
ACE089		**698685**
ACE090		**698739**
ACE091		**715645**
ACE092		**698689**
ACE094		**698888**
ACE096		**698714**
ACE0972		**698747**
ACE098		**698694**
ACE099		**698799**
ACE100		**698794**
ACE102		**698882**
ACE103		**698168**
ACE104		**698163**
ACE105		**698541**
ACE106		**698734**
ACE107		**698859**
ACE109		**698175**
ACE110		**698715**
ACE112		**698753**
ACE1132		**698735**
ACE114		**698777**
ACE1152		**698246**
ACE116		**698750**
ACE118		**698870**
ACE1192		**715536**
ACE120		**698796**
ACE121		**698657**
ACE122		**715562**
ACE123		**698737**
ACE124		**715581**
ACE125		**698800**
ACE126		**715573**
ACE127		**698692**
ACE128		**715688**
ACE129		**715572**
ACE130		**698795**
ACE131		**715571**
ACE132		**715513**
ACE133		**698801**
ACE134		**698839**
ACE135		**698876**
ACE137		**698884**
ACE138		**715631**
ACE139		**698730**
ACE141		**698736**
ACE144		**715515**
ACE145		**715506**
ACE147		**715514**
ACE148		**698868**
ACE1492		**698864**
ACE154		**698866**

OE IAM	PROD	Valeo
COOPERS (.../...)		
ACE156		**715503**
ACE158		**715510**
ACE160		**698817**
ACE1622		**698740**
ACE164		**715687**
ACE166		**715533**
ACE1692		**715557**
ACE1712		**715501**
ACE172		**715521**
ACE1732		**698892**
ACE185		**715550**
ACE186		**715689**
ACE187		**715558**
ACE192		**715517**
ACE194		**715553**
ACE195		**715613**
ACE196		**698886**
ACE197		**715541**
ACE198		**698741**
ACE201		**715519**
ACE2042		**715555**
ACE205		**715636**
ACE206		**715552**
ACE207		**715580**
ACE208		**715540**
ACE209		**715638**
ACE2102		**715607**
ACE211		**698725**
ACE2152		**715642**
ACE2202		**715554**
ACE2232		**715525**
PC8038		**698177**
PC8051		**698858**
PC8053		**698489**
PC8061		**698176**
PC8075		**698512**
PC8085		**698771**
PC8087		**698860**
PC8112		**698878**
PC8147		**698700**
PC8153		**715570**
PC8174		**715532**
PC8197		**715597**
PC8199		**715601**
PC8200		**715616**
PC8209		**715579**
PC8215		**715526**
PC82172		**715649**
PC8225		**715595**
PC8228		**715724**
PC8230		**698871**
PC82412		**715556**
PC8248		**715524**
PC8250		**715660**
PC8254		**715542**
PC8255		**715658**
PC8256		**715691**
PC8257		**715694**
PC8263		**715585**
PC8264		**715721**

OE IAM	PROD	Valeo
COOPERS (.../...)		
PC8265		**715654**
PC82692		**715662**
PC8279		**698664**
PC8290		**715705**
PC8297		**715559**
PC8298		**715706**
PC83032		**715523**
PCK8003		**715677**
PCK8020		**698748**
PCK8036		**698688**
PCK8043		**698695**
PCK8059		**715538**
PCK8060		**698749**
PCK8063		**698745**
PCK8068		**698687**
PCK8085		**715512**
PCK8091		**715612**
PCK8095		**698774**
PCK8103		**698683**
PCK8104		**698746**
PCK8111		**715539**
PCK8164		**715610**
PCK8198		**715702**
PCK8214		**715511**
PCK8216		**715635**
PCK8219		**698883**
PCK8226		**715608**
PCK8227		**715505**
PCK8229		**698802**
PCK8230		**698872**
PCK8249		**715647**
PCK8250		**715661**
PCK8253		**715672**
PCK8255		**715659**
PCK82602		**715544**
PCK8262		**698776**
PCK8263		**715586**
PCK8264		**715722**
PCK8278		**715600**
CORTECO		
21650107		**698168**
21651182		**698165**
21651183		**698167**
21651184		**698166**
21651185		**698202**
21651195		**698772**
21651195		**715531**
21651196		**698169**
21651196		**698169**
21651197		**698170**
21651198		**698171**
21651199		**715684**
21651292		**698744**
21651293		**698488**
21651293		**698749**
21651294		**698778**
21651295		**698774**
21651296		**698535**
21651296		**698839**

OE IAM	PROD	Valeo
CORTECO (.../...)		
21651881		**698470**
21651881		**698838**
21651882		**698246**
21651887		**698704**
21651890		**698164**
21651891		**698164**
21651891		**698235**
21651893		**698201**
21651894		**698198**
21651895		**698247**
21651895		**698696**
21651896		**698199**
21651897		**698246**
21651897		**715685**
21651898		**698163**
21651899		**698146**
21651901		**698197**
21651901		**698197**
21651911		**698770**
21651912		**698159**
21651912		**698679**
21651912		**698885**
21651914		**715683**
21651914		**698684**
21651915		**698174**
21651916		**698173**
21651917		**698149**
21651918		**698172**
21651919		**698815**
21651920		**698203**
21651952		**698197**
21651953		**698687**
21651954		**698688**
21651955		**698686**
21651956		**715578**
21651956		**698164**
21651957		**698682**
21651958		**698684**
21651960		**698696**
21651961		**698697**
21651963		**698746**
21651964		**715632**
21651966		**715675**
21651966		**698202**
21651967		**698716**
21651968		**698163**
21651969		**698489**
21651970		**698689**
21651972		**698196**
21651973		**716034**
21651974		**698706**
21651976		**698840**
21651976		**698840**
21651977		**716010**
21651979		**698662**
21651979		**698874**
21651980		**698663**
21651981		**715645**
21651982		**698712**
21651983		**698255**

OE IAM	PROD	Valeo
CORTECO (.../...)		
21651984		**698177**
21651984		**698279**
21651986		**698770**
21651987		**698794**
21651987		**698794**
21651991		**698878**
21651994		**698858**
21651995		**698487**
21652002		**716018**
21652045		**715577**
21652045		**715577**
21652308		**698454**
21652317		**698771**
21652335		**698701**
21652336		**698750**
21652336		**698489**
21652338		**698860**
21652338		**715526**
21652340		**698859**
21652341		**698859**
21652345		**698869**
21652346		**698734**
21652347		**698707**
21652348		**698276**
21652349		**698512**
21652350		**698773**
21652351		**698769**
21652352		**698747**
21652354		**698695**
21652355		**715617**
21652356		**698685**
21652357		**698739**
21652357		**698685**
21652358		**698700**
21652359		**715573**
21652360		**698762**
21652360		**698762**
21652361		**698745**
21652538		**698692**
21652539		**698796**
21652539		**715563**
21652540		**698714**
21652541		**698748**
21652542		**698715**
21652543		**698680**
21652544		**698867**
21652544		**698535**
21652546		**698735**
21652548		**698664**
21652550		**698594**
21652551		**698681**
21652552		**698791**
21652687		**698290**
21652687		**715562**
21652687		**715568**
21652688		**698475**
21652688		**698475**
21652689		**698606**
21652694		**698751**
21652709		**698779**

OE IAM	PROD	Valeo
CORTECO (.../...)		
21652713		**698683**
21652714		**698711**
21652715		**698710**
21652812		**715621**
21652848		**698856**
21652849		**698861**
21652850		**698724**
21652851		**698857**
21652852		**698862**
21652853		**698725**
21652854		**698865**
21652855		**715611**
21652856		**698738**
21652856		**715530**
21652857		**698694**
21652858		**698693**
21652859		**715505**
21652860		**698891**
21652860		**698890**
21652861		**698743**
21652863		**698702**
21652865		**698741**
21652867		**715545**
21652867		**715548**
21652868		**715528**
21652870		**715549**
21652872		**698737**
21652873		**715565**
21652874		**698795**
21652897		**715572**
21652898		**698792**
21652899		**698691**
21652900		**698690**
21652916		**698776**
21652985		**698840**
21652989		**698886**
21652990		**715594**
21652991		**715504**
21652992		**698870**
21652993		**698893**
21652994		**698876**
21652995		**698877**
21652996		**715512**
21652997		**716007**
21652998		**716014**
21652999		**716015**
21653000		**716020**
21653001		**716021**
21653002		**698797**
21653003		**716012**
21653005		**716036**
21653006		**716011**
21653007		**716019**
21653008		**698801**
21653009		**698872**
21653009		**698872**
21653010		**698703**
21653011		**698705**
21653013		**698802**
21653013		**715603**

OE	IAM	PROD	Valeo
CORTECO (.../...)			
21653014			**698774**
21653015			**698768**
21653016			**716035**
21653017			**698879**
21653018			**716047**
21653019			**716016**
21653020			**715581**
21653020			**698768**
21653020			**715581**
21653021			**716004**
21653023			**698790**
21653024			**698800**
21653025			**698871**
21653025			**698871**
21653026			**698866**
21653027			**715686**
21653028			**698657**
21653029			**698777**
21653029			**698778**
21653030			**698838**
21653031			**698793**
21653032			**698731**
21653033			**715590**
21653034			**698882**
21653035			**698883**
21653063			**698863**
21653064			**698864**
21653066			**715501**
21653067			**715500**
21653068			**698749**
21653069			**715676**
21653070			**715568**
21653071			**698730**
21653102			**698884**
21653114			**715514**
21653115			**698723**
21653140			**698177**
21653141			**698540**
21653142			**698541**
21653143			**715507**
21653144			**715506**
21653145			**698870**
21653146			**715629**
21653147			**715558**
21653148			**698713**
21653149			**698713**
26152355			**698201**
80000021			**698709**
80000021			**698875**
80000022			**698469**
80000027			**715646**
80000029			**698819**
80000029			**698196**
80000060			**698817**
80000061			**715510**
80000062			**715511**
80000063			**715502**
80000064			**715503**
80000065			**698775**
80000066			**715598**

OE	IAM	PROD	Valeo
CORTECO (.../...)			
80000067			**698873**
80000068			**715509**
80000069			**715571**
80000070			**698880**
80000071			**715508**
80000072			**715513**
80000072			**715513**
80000074			**698753**
80000076			**716048**
80000077			**715677**
80000079			**715670**
80000080			**698736**
80000082			**715534**
80000083			**715517**
80000083			**715591**
80000084			**715525**
80000113			**698708**
80000114			**715538**
80000155			**715535**
80000156			**715593**
80000157			**715516**
80000158			**698888**
80000159			**715527**
80000160			**715569**
80000162			**715542**
80000163			**715574**
80000164			**715551**
80000165			**715641**
80000330			**698868**
80000333			**716028**
80000336			**716049**
80000337			**716050**
80000345			**715532**
80000346			**715533**
80000349			**716017**
80000350			**716040**
80000354			**716005**
80000360			**715518**
80000361			**715519**
80000362			**716039**
80000364			**716037**
80000373			**698176**
80000402			**698888**
80000403			**698890**
80000405			**698892**
80000406			**698892**
80000408			**715648**
80000409			**698723**
80000412			**715687**
80000415			**715670**
80000418			**698512**
80000429			**698680**
80000431			**715573**
80000436			**698279**
80000440			**715517**
80000536			**698175**
80000538			**715643**
80000541			**715552**
80000546			**715529**
80000548			**715522**

OE	IAM	PROD	Valeo
CORTECO (.../...)			
80000602			**715665**
80000603			**698886**
80000604			**715550**
80000605			**715550**
80000606			**715640**
80000614			**715601**
80000615			**715555**
80000615			**715554**
80000616			**715602**
80000616			**715601**
80000617			**715637**
80000620			**715540**
80000621			**698710**
80000622			**715540**
80000623			**716006**
80000626			**716008**
80000628			**715653**
80000631			**716046**
80000633			**716041**
80000634			**698859**
80000636			**715653**
80000637			**715615**
80000641			**716046**
80000643			**715545**
80000644			**715523**
80000645			**716001**
80000647			**715544**
80000648			**715546**
80000649			**715520**
80000652			**715521**
80000654			**715523**
80000655			**698895**
80000657			**698894**
80000660			**715556**
80000662			**715515**
80000666			**715556**
80000667			**715557**
80000670			**715539**
80000671			**715682**
80000676			**715609**
80000689			**715657**
80000712			**715597**
80000740			**715585**
80000741			**715586**
80000741			**715585**
80000742			**698869**
80000745			**715619**
80000760			**698688**
80000761			**715645**
80000764			**715541**
80000775			**698817**
80000776			**698887**
80000777			**715553**
80000779			**715615**
80000783			**715526**
80000784			**715515**
80000785			**715564**
80000786			**715520**
80000788			**698175**
80000802			**715509**

OE IAM	PROD	Valeo
CORTECO (.../...)		
80000804		**715526**
80000807		**715570**
80000812		**715590**
80000813		**715592**
80000815		**715636**
80000816		**715636**
80000817		**698160**
80000824		**715547**
80000825		**715688**
80000839		**715554**
80000844		**715600**
80000847		**715583**
80000848		**715584**
80000848		**715583**
80000852		**715591**
80000853		**715631**
80000854		**715630**
80000865		**715614**
80000866		**715614**
80000869		**715588**
80000871		**715596**
80000874		**715559**
80000875		**715559**
80000877		**715654**
80000878		**715654**
80000879		**715579**
80000880		**715580**
80000911		**715639**
80000912		**715639**
80000915		**715595**
80000916		**716063**
80001024		**715561**
80001027		**715616**
80001030		**715607**
80001031		**715607**
80001033		**715536**
80001035		**715608**
80001036		**715644**
80001041		**715575**
80001129		**715661**
80001130		**715669**
80001170		**715513**
80001171		**715616**
80001179		**715681**
80001185		**715658**
80001185		**715658**
80001186		**715659**
80001208		**715663**
80001211		**715690**
80001439		**715624**
80001447		**715668**
80001450		**715672**
80001456		**715649**
80001459		**715635**
80001460		**715647**
CTR		
1002142		**509941**
1201114		**699073**
1201114		**699573**

OE IAM	PROD	Valeo
CTR (.../...)		
1201116		**699102**
1201116		**699348**
1201116		**699602**
1201116		**699848**
1201117		**699077**
1201117		**699577**
1201118		**699072**
1201118		**699572**
1201119		**699071**
1201119		**699571**
1201120		**699076**
1201121		**699075**
1201121		**699575**
1201122		**699070**
1201122		**699570**
1201128		**699102**
1201128		**699602**
1201129		**699143**
1201129		**699643**
1201132		**699250**
1201132		**699750**
1201133		**699251**
1201133		**699751**
1201136		**699308**
1201136		**699808**
1201138		**699301**
1201139		**699324**
1201139		**699824**
1201141		**699270**
1201141		**699770**
1201146		**699731**
1201226		**699316**
1201317		**699728**
1201318		**699730**
1201319		**699727**
1201320		**699383**
1201321		**699222**
1201321		**699722**
1201325		**699725**
1201326		**699729**
1201328		**699275**
1201328		**699775**
1201351		**699166**
1201351		**699259**
1201351		**699666**
1201352		**699753**
1201355		**699260**
1201360		**699261**
1201361		**699264**
1201363		**699262**
1201364		**699263**
1201437		**699220**
1201437		**699720**
1201439		**699313**
1201450		**699109**
1201450		**699609**
1201451		**699314**
1201452		**699315**
1201515		**699212**
1201583		**699212**

OE IAM	PROD	Valeo
CTR (.../...)		
1201587		**699094**
1201587		**699594**
1201588		**699202**
1201589		**699218**
1201589		**699718**
1201593		**699003**
1201594		**699157**
1201594		**699657**
1201596		**699057**
1201596		**699557**
1201598		**699015**
1201598		**699515**
1201599		**699115**
1201599		**699615**
1201640		**699088**
1201640		**699588**
1201641		**699092**
1201641		**699592**
1201642		**699079**
1201642		**699579**
1201643		**699045**
1201643		**699545**
1201644		**699059**
1201644		**699559**
1201645		**699107**
1201645		**699607**
1201647		**699240**
1201647		**699740**
1201648		**699191**
1201648		**699691**
1201651		**699239**
1201651		**699739**
1201652		**699039**
1201652		**699539**
1201653		**699144**
1201653		**699644**
1201654		**699093**
1201654		**699593**
1201656		**699241**
1201656		**699741**
1201657		**699246**
1201657		**699746**
1201658		**699197**
1201658		**699697**
1201659		**699234**
1201659		**699734**
1201703		**699323**
1201703		**699823**
1201705		**699148**
1201705		**699648**
1201707		**699299**
1201708		**699105**
1201708		**699605**
1201710		**699051**
1201710		**699551**
1201711		**699105**
1201711		**699605**
1201712		**699300**
1201713		**699300**
1201714		**699205**

OE IAM	PROD	Valeo
CTR (.../...)		
1201714		**699298**
1201714		**699798**
1201715		**699320**
1201733		**699840**
1201736		**699330**
1201736		**699830**
1201738		**699328**
1201738		**699828**
1201740		**699119**
1201740		**699619**
1201741		**699120**
1201741		**699620**
1201742		**699128**
1201742		**699327**
1201742		**699628**
1201742		**699827**
1201744		**699047**
1201744		**699547**
1201746		**699127**
1201746		**699627**
1201747		**699078**
1201748		**699048**
1201748		**699548**
1201749		**699209**
1201751		**699326**
1201751		**699826**
1201753		**699335**
1201754		**699336**
1201754		**699836**
1201763		**813200**
1201763		**813700**
1201764		**699303**
1201767		**699161**
1201767		**699661**
1201802		**699101**
1201803		**699147**
1201804		**699114**
1201805		**699145**
1201809		**699286**
1201810		**699287**
1201811		**699288**
1201812		**699290**
1201813		**699281**
1201818		**699020**
1201818		**699520**
1201819		**699289**
1201824		**699279**
1201829		**699175**
1201829		**699675**
1201831		**699174**
1201831		**699674**
1201853		**699236**
1201853		**699736**
1201855		**699190**
1201855		**699690**
1201860		**699236**
1201860		**699736**
1201861		**699155**
1201861		**699655**
1201862		**699190**

OE IAM	PROD	Valeo
CTR (.../...)		
1201862		**699690**
1201863		**813189**
1201863		**813689**
1201864		**699026**
1201864		**699526**
1201867		**699023**
1201867		**699523**
1201868		**699028**
1201868		**699528**
1201874		**813157**
1201890		**699280**
1201893		**699391**
1201894		**699283**
1201895		**699284**
1201899		**699374**
1201900		**699373**
1201901		**699212**
1211019		**508628**
1211022		**508610**
1211024		**508616**
1211026		**509718**
1211027		**508594**
1211029		**508731**
1211035		**509396**
1211037		**508630**
1211038		**508620**
1211041		**508623**
1211042		**509690**
1211046		**509499**
1211057		**508597**
1211059		**509689**
1211060		**508834**
1211062		**508900**
1211064		**508902**
1211072		**815963**
1211076		**815964**
1211078		**508612**
1211079		**509701**
1211081		**508611**
1211085		**508954**
1211091		**508599**
1211092		**508740**
1211095		**509558**
1211099		**508922**
1211156		**509709**
1211184		**508932**
1211185		**508736**
1211188		**508741**
1211190		**508737**
1211191		**508603**
1211192		**508840**
1211193		**508836**
1211194		**508738**
1211201		**509391**
1211203		**509392**
1211204		**509393**
1211206		**509394**
1211207		**509395**
1211210		**508872**
1211211		**509524**

OE IAM	PROD	Valeo
CTR (.../...)		
1211211		**509525**
1211212		**509403**
1211225		**509696**
1211227		**509695**
1211230		**508888**
1211232		**508879**
1211237		**509502**
1211238		**509706**
1211239		**509503**
1211240		**508626**
1211241		**508627**
1211242		**508629**
1211243		**509497**
1211244		**509498**
1211245		**509527**
1211248		**815970**
1211255		**508928**
1211265		**509720**
1211266		**509721**
1211284		**509568**
1211287		**815971**
1211288		**815972**
1211289		**815973**
1211290		**509716**
1211292		**509717**
1211293		**509411**
1211294		**509529**
1211298		**508906**
1211299		**508907**
1211300		**508739**
1211301		**509565**
1211302		**509563**
1211303		**509591**
1211304		**509400**
1211320		**508291**
1211320		**509589**
1211321		**509714**
1211322		**509592**
1211323		**509606**
1211360		**508957**
1211363		**508615**
1211364		**508622**
1211365		**508613**
1211366		**508624**
1211367		**508604**
1211369		**508605**
1211370		**508606**
1211371		**508911**
1211373		**508607**
1211375		**508609**
1211376		**509560**
1211377		**509562**
1211378		**508807**
1211379		**815974**
1211380		**508805**
1211381		**815969**
1211384		**815975**
1211385		**508909**
1211386		**509559**
1211387		**509590**

CTR (.../...)

OE	PROD	Valeo
1211388		**509404**
1211389		**509340**
1211390		**508631**
1211391		**508619**
1211393		**508837**
1211394		**509564**
1211396		**508871**
1211397		**509401**
1211398		**815967**
1211399		**815968**
1211400		**508874**
1211402		**509500**
1211404		**509402**
1211405		**508873**
1211406		**509719**
1211410		**508625**
1211411		**509693**
1211412		**509692**
1211413		**509691**
1211420		**508811**
1211421		**508607**
1211422		**509593**
1211423		**509594**
1211424		**508812**
1211430		**509567**
1211431		**508921**
1211432		**508919**
1211438		**508895**
1211440		**508899**
1211441		**508898**
1211445		**509549**
1211450		**508880**
1211452		**508885**
1211454		**508882**
1211456		**508881**
1211456		**509733**
1211458		**509501**
1211460		**509704**
1211472		**509570**
1211516		**815966**
1223008		**816910**
1223015		**816866**
1223023		**817375**
1223032		**817225**
1223034		**817232**
1223038		**816992**
1223057		**817492**
1223058		**816900**
1223059		**817252**
1223062		**816924**
1223067		**816902**
1223070		**817507**
1223084		**817674**
1223089		**816863**
1223096		**816865**
1223100		**816867**
1223102		**816912**
1223104		**817197**
1223105		**816839**
1223108		**817171**

CTR (.../...)

OE	PROD	Valeo
1223114		**816967**
1223115		**817247**
1223118		**817427**
1223119		**816967**
1223134		**817244**
1223142		**817666**
1223143		**817665**
1223144		**817840**
1223155		**817675**
1223185		**816852**
1223190		**816921**
1223198		**817067**
1223200		**816803**
1223201		**817230**
1223202		**816850**
1223203		**816984**
1223204		**816977**
1223205		**816964**
1223208		**817283**
1223209		**817508**
1223210		**817464**
1223214		**816835**
1223215		**817375**
1223241		**817061**
1223242		**816756**
1223243		**816865**
1223303		**817253**
1223310		**817253**
1223321		**817607**
1223322		**817248**
1223323		**817383**
1223324		**817405**
1223353		**816922**
1223372		**817562**
1223374		**817011**
1223376		**816891**
1223377		**817504**
1223381		**816949**
1223382		**817848**
1223398		**817246**
1223399		**817247**
1223400		**816908**
1223401		**816948**
1223427		**816985**
1223432		**817385**
1223465		**817527**
1223473		**817684**
1223474		**817685**
1223492		**817505**
1223494		**817506**
1223602		**816945**
1223602		**817073**
1223603		**817445**
1223611		**817493**
1223622		**817567**
1223624		**817567**
1223625		**817664**
1223706		**817023**
1223707		**817023**
1223708		**817022**

DACIA

OE	PROD	Valeo
6001547484		**812374**
6001547487		**715058**
6001547488		**509898**
6001547691		**715057**
6001548601		**509938**
6001550660		**814051**
7700836314		**509404**
7711228912		**715538**
8200182361		**817701**
8200241088		**817827**
8200513983		**814051**
8200603434		**699414**
8200603434		**699914**
8200741257		**814077**
8200802609		**813198**
8200880551		**814178**
272772835R		**698753**
272772835R		**698753**
7711497531		**813827**
926009154R		**813256**

DAEWOO

OE	PROD	Valeo
93740495		**715536**
96164823		**814277**
96190645		**698860**
96207422		**698859**
96225633		**509890**
96231949		**812335**
96255980		**813159**
96259613		**698860**
96425700		**715588**
96435888		**715535**
96512886		**509922**
96539649		**715535**
96554421		**715526**
96539632		**818061**
96539634		**814344**
96539642		**812442**
96566331		**818060**
96569392		**818060**
EC96190645		**698860**
EC96207422		**698859**

DAF

OE	PROD	Valeo
107685		**883614**
1264800		**813019**
1290592		**815963**
1321891		**815964**
1322259		**716004**
1347066		**716004**
1362168		**716008**
1600428		**716001**
1605822		**698853**
1629115		**818986**
1629115		**818986**
1638737		**813019**
1658991		**716006**
1659691		**716004**
1322255		**716006**

OE IAM	PROD	Valeo
DAF (.../...)		
1347068		**716005**
1362124		**716007**
DAIHATSU		
08975K2000100		**715695**
8713950060		**715730**
88450B4020		**814206**
99906850M2036		**715590**
99906850M2038		**715637**
DELPHI		
1135008		**699070**
1135008		**699570**
1135295		**699072**
1135295		**699572**
1854102		**699250**
1854102		**699750**
1854103		**699251**
1854103		**699751**
1854111		**699270**
1854111		**699770**
9174397		**699251**
9174397		**699751**
90559855		**699250**
90559855		**699750**
017553M		**508610**
017555M		**508615**
BG2448		**816756**
SP0155491		**813132**
SP0155491		**813632**
TSP0155001		**699075**
TSP0155001		**699575**
TSP0155002		**699076**
TSP0155006		**699047**
TSP0155006		**699547**
TSP0155006		**813606**
TSP0155008		**699072**
TSP0155008		**699572**
TSP0155009		**699071**
TSP0155009		**699571**
TSP0155011		**699077**
TSP0155011		**699577**
TSP0155016		**699073**
TSP0155016		**699573**
TSP0155018		**699105**
TSP0155018		**699605**
TSP0155019		**699051**
TSP0155019		**699551**
TSP0155022		**699157**
TSP0155022		**699657**
TSP0155023		**699143**
TSP0155023		**699643**
TSP0155024		**699155**
TSP0155024		**699655**
TSP0155025		**699102**
TSP0155025		**699250**
TSP0155025		**699602**
TSP0155025		**699750**
TSP0155026		**699251**

OE IAM	PROD	Valeo
DELPHI (.../...)		
TSP0155026		**699751**
TSP0155031		**699236**
TSP0155031		**699736**
TSP0155035		**699101**
TSP0155039		**699147**
TSP0155041		**699020**
TSP0155041		**699520**
TSP0155048K		**699728**
TSP0155050K		**699209**
TSP0155051K		**699330**
TSP0155051K		**699830**
TSP0155052K		**699115**
TSP0155052K		**699615**
TSP0155053K		**699289**
TSP0155054		**699114**
TSP0155057		**699015**
TSP0155057		**699515**
TSP0155058		**699115**
TSP0155058		**699615**
TSP0155059		**699013**
TSP0155059		**699513**
TSP0155060		**813200**
TSP0155060		**813700**
TSP0155060K		**813200**
TSP0155060K		**813700**
TSP0155061		**699175**
TSP0155061		**699675**
TSP0155062		**699222**
TSP0155062		**699722**
TSP0155064		**699727**
TSP0155066		**699299**
TSP0155067		**699259**
TSP0155068		**699260**
TSP0155071		**699288**
TSP0155072		**699088**
TSP0155072		**699534**
TSP0155072		**699588**
TSP0155073		**699045**
TSP0155073		**699545**
TSP0155074		**699109**
TSP0155074		**699609**
TSP0155075		**699290**
TSP0155077		**699280**
TSP0155080		**699286**
TSP0155082		**699279**
TSP0155082		**699281**
TSP0155082		**699284**
TSP0155083		**699298**
TSP0155083		**699798**
TSP0155084		**699105**
TSP0155084		**699605**
TSP0155088		**699753**
TSP0155094		**813159**
TSP0155097		**699546**
TSP0155099		**699048**
TSP0155099		**699548**
TSP0155103		**699127**
TSP0155103		**699627**
TSP0155104		**699128**
TSP0155104		**699327**

OE IAM	PROD	Valeo
DELPHI (.../...)		
TSP0155104		**699628**
TSP0155104		**699827**
TSP0155105		**699047**
TSP0155105		**699547**
TSP0155106		**699209**
TSP0155108		**699205**
TSP0155110		**699120**
TSP0155110		**699620**
TSP0155114		**699026**
TSP0155114		**699526**
TSP0155115		**699039**
TSP0155115		**699539**
TSP0155116		**699729**
TSP0155117		**699730**
TSP0155117		**699731**
TSP0155118		**699003**
TSP0155120		**699070**
TSP0155120		**699570**
TSP0155121		**699119**
TSP0155121		**699619**
TSP0155137		**699197**
TSP0155137		**699697**
TSP0155138		**699240**
TSP0155138		**699740**
TSP0155139		**699241**
TSP0155139		**699741**
TSP0155140		**699246**
TSP0155140		**699746**
TSP0155141		**699391**
TSP0155142		**699270**
TSP0155142		**699770**
TSP0155145		**699102**
TSP0155145		**699602**
TSP0155147		**699174**
TSP0155147		**699674**
TSP0155148		**699145**
TSP0155149		**699028**
TSP0155149		**699528**
TSP0155151		**699023**
TSP0155151		**699523**
TSP0155154		**699078**
TSP0155156		**699312**
TSP0155157		**699313**
TSP0155161		**699345**
TSP0155164		**699059**
TSP0155164		**699559**
TSP0155166		**699107**
TSP0155166		**699607**
TSP0155167		**699092**
TSP0155167		**699592**
TSP0155169		**699079**
TSP0155169		**699579**
TSP0155171		**699094**
TSP0155171		**699594**
TSP0155172		**699191**
TSP0155172		**699691**
TSP0155174		**699314**
TSP0155175		**699315**
TSP0155176		**699220**
TSP0155176		**699720**

OE IAM	PROD	Valeo
DELPHI (.../...)		
TSP0155177		**699220**
TSP0155177		**699720**
TSP0155180		**813013**
TSP0155182		**699514**
TSP0155186K		**699298**
TSP0155186K		**699798**
TSP0155191		**699725**
TSP0155204		**813653**
TSP0155206		**699321**
TSP0155219		**813170**
TSP0155241		**699306**
TSP0155241		**699806**
TSP0155242		**699190**
TSP0155242		**699237**
TSP0155242		**699690**
TSP0155242		**699737**
TSP0155243		**699303**
TSP0155247		**699326**
TSP0155247		**699826**
TSP0155248		**699106**
TSP0155248		**699606**
TSP0155249		**699306**
TSP0155249		**699308**
TSP0155249		**699806**
TSP0155249		**699808**
TSP0155252		**699310**
TSP0155257		**699051**
TSP0155257		**699551**
TSP0155259		**699212**
TSP0155262		**813168**
TSP0155264		**699300**
TSP0155267		**699301**
TSP0155268		**699324**
TSP0155268		**699824**
TSP0155273		**699199**
TSP0155273		**699699**
TSP0155275		**699144**
TSP0155275		**699644**
TSP0155276		**699202**
TSP0155277		**699218**
TSP0155277		**699718**
TSP0155282		**699057**
TSP0155282		**699557**
TSP0155285		**699093**
TSP0155285		**699593**
TSP0155287		**699316**
TSP0155293		**699366**
TSP0155296		**813016**
TSP0155296		**813017**
TSP0155297		**699161**
TSP0155297		**699661**
TSP0155298		**699012**
TSP0155298		**699512**
TSP0155300		**699262**
TSP0155301		**699263**
TSP0155302		**699166**
TSP0155302		**699666**
TSP0155303		**813012**
TSP0155310		**699326**
TSP0155310		**699826**

OE IAM	PROD	Valeo
DELPHI (.../...)		
TSP0155316		**813151**
TSP0155319		**699289**
TSP0155320		**699283**
TSP0155321		**699373**
TSP0155322		**699374**
TSP0155326		**699284**
TSP0155331		**813167**
TSP0155332		**699380**
TSP0155333		**699275**
TSP0155333		**699775**
TSP0155334		**813189**
TSP0155334		**813689**
TSP0155335		**813171**
TSP0155337		**699272**
TSP0155337		**699772**
TSP0155338		**813157**
TSP0155340		**813195**
TSP0155342		**699234**
TSP0155342		**699734**
TSP0155344		**699372**
TSP0155344		**699383**
TSP0155345		**699283**
TSP0155347		**813634**
TSP0155349		**813633**
TSP0155351		**813635**
TSP0155352		**699860**
TSP0155353		**699246**
TSP0155353		**699746**
TSP0155355		**699766**
TSP0155356		**813200**
TSP0155356		**813700**
TSP0155357		**699307**
TSP0155357		**699807**
TSP0155360		**699261**
TSP0155361		**699264**
TSP0155362		**699357**
TSP0155364		**813638**
TSP0155367		**699317**
TSP0155367		**699817**
TSP0155369		**699239**
TSP0155369		**699739**
TSP0155370		**699320**
TSP0155371		**699323**
TSP0155371		**699823**
TSP0155373		**699336**
TSP0155373		**699836**
TSP0155374		**699325**
TSP0155375		**699840**
TSP0155376		**699335**
TSP0155377		**699337**
TSP0155377		**699837**
TSP0155378		**699381**
TSP0155380		**699318**
TSP0155380		**699818**
TSP0155381		**699152**
TSP0155381		**699652**
TSP0155391		**699148**
TSP0155391		**699648**
TSP0155392		**699209**
TSP0155395		**699284**

OE IAM	PROD	Valeo
DELPHI (.../...)		
TSP0155396		**699322**
TSP0155396		**699822**
TSP0155399		**699287**
TSP0155406		**813202**
TSP0155407		**813203**
TSP0155409		**699346**
TSP0155410		**699502**
TSP0155411		**699359**
TSP0155412		**699216**
TSP0155412		**699716**
TSP0155413		**699106**
TSP0155413		**699606**
TSP0155414		**699221**
TSP0155414		**699721**
TSP0155415		**699201**
TSP0155415		**699701**
TSP0155416		**699305**
TSP0155417		**813158**
TSP0155419		**699358**
TSP0155419		**699858**
TSP0155421		**699347**
TSP0155423		**699355**
TSP0155423		**699855**
TSP0155424		**699237**
TSP0155424		**699737**
TSP0155427		**699036**
TSP0155427		**699536**
TSP0155428		**699405**
TSP0155428		**699905**
TSP0155433		**699372**
TSP0155436		**699355**
TSP0155436		**699855**
TSP0155437		**699288**
TSP0155439		**699308**
TSP0155439		**699405**
TSP0155439		**699808**
TSP0155439		**699905**
TSP0155441		**699119**
TSP0155441		**699619**
TSP0155445		**813169**
TSP0155452		**699308**
TSP0155452		**699808**
TSP0155453		**813200**
TSP0155453		**813700**
TSP0155458		**813600**
TSP0155458		**813605**
TSP0155459		**813601**
TSP0155463		**813194**
TSP0155465		**699357**
TSP0155466		**813197**
TSP0155469		**699391**
TSP0155472		**699357**
TSP0155474		**813162**
TSP0155485		**813196**
TSP0155491		**813131**
TSP0155491		**813132**
TSP0155491		**813165**
TSP0155491		**813631**
TSP0155491		**813632**
TSP0155492		**813243**

OE IAM	PROD	Valeo
DELPHI (.../...)		
TSP0155802		**813602**
TSP0155829		**813222**
TSP0155848		**813123**
TSP0155849		**813122**
TSP0155872		**813115**
TSP0155874		**813220**
TSP0155876		**813125**
TSP0155878		**813147**
TSP0155879		**813124**
TSP0156012M		**699840**
TSP0156019M		**699322**
TSP0156019M		**699822**
TSP0156020M		**699272**
TSP0156020M		**699772**
TSP0156021M		**699216**
TSP0156021M		**699716**
TSP0156022M		**813189**
TSP0156022M		**813689**
TSP0156031M		**699323**
TSP0156031M		**699823**
TSP0156032M		**699320**
TSP0156033M		**699275**
TSP0156033M		**699775**
TSP0156036M		**699383**
TSP0156077M		**813173**
TSP0156080M		**699148**
TSP0156080M		**699648**
TSP0156084M		**699327**
TSP0156084M		**699827**
TSP0156085M		**699328**
TSP0156085M		**699828**
TSP0156086M		**699335**
TSP0156087M		**699337**
TSP0156087M		**699837**
TSP0156095M		**699381**
TSP0156105M		**699307**
TSP0156105M		**699807**
TSP0156106M		**699355**
TSP0156106M		**699855**
TSP0175001		**508630**
TSP0175002		**508628**
TSP0175004		**508805**
TSP0175004		**509795**
TSP0175005		**508741**
TSP0175010		**508736**
TSP0175013		**508594**
TSP0175014		**508731**
TSP0175016		**508740**
TSP0175017		**508739**
TSP0175018		**509565**
TSP0175020		**508738**
TSP0175021		**508603**
TSP0175022		**508737**
TSP0175023		**508624**
TSP0175024		**508623**
TSP0175025		**508620**
TSP0175026		**508612**
TSP0175027		**508609**
TSP0175027		**508622**
TSP0175028		**508616**

OE IAM	PROD	Valeo
DELPHI (.../...)		
TSP0175029		**508873**
TSP0175029		**509401**
TSP0175030		**508619**
TSP0175031		**508607**
TSP0175032		**508807**
TSP0175034		**508928**
TSP0175041		**508805**
TSP0175042		**508599**
TSP0175044		**508613**
TSP0175045		**508597**
TSP0175046		**508611**
TSP0175047		**508605**
TSP0175048		**508881**
TSP0175049		**508885**
TSP0175050		**508840**
TSP0175054		**508834**
TSP0175055		**508811**
TSP0175057		**509393**
TSP0175058		**508870**
TSP0175058		**508871**
TSP0175059		**508835**
TSP0175059		**508836**
TSP0175060		**508837**
TSP0175061		**508934**
TSP0175063		**509562**
TSP0175064		**509560**
TSP0175065		**509400**
TSP0175066		**509564**
TSP0175067		**508874**
TSP0175068		**508872**
TSP0175069		**508631**
TSP0175070		**508629**
TSP0175071		**508626**
TSP0175072		**508902**
TSP0175075		**509396**
TSP0175076		**508606**
TSP0175077		**508922**
TSP0175078		**508731**
TSP0175079		**508907**
TSP0175082		**508888**
TSP0175083		**508624**
TSP0175085		**509392**
TSP0175086		**508625**
TSP0175086		**508936**
TSP0175087		**508882**
TSP0175088		**508900**
TSP0175094		**509733**
TSP0175095		**509391**
TSP0175097		**509394**
TSP0175099		**509395**
TSP0175103		**508898**
TSP0175114		**508936**
TSP0175116		**508935**
TSP0175118		**508940**
TSP0175126		**508957**
TSP0175133		**509690**
TSP0175135		**508954**
TSP0175138		**508951**
TSP0175141		**508911**
TSP0175141		**509716**

OE IAM	PROD	Valeo
DELPHI (.../...)		
TSP0175142		**508906**
TSP0175143		**509559**
TSP0175150		**508914**
TSP0175151		**508625**
TSP0175162		**508627**
TSP0175163		**508921**
TSP0175166		**509567**
TSP0175167		**508604**
TSP0175174		**509570**
TSP0175183		**508630**
TSP0175186		**508880**
TSP0175187		**509558**
TSP0175191		**508932**
TSP0175192		**508892**
TSP0175192		**508932**
TSP0175193		**508891**
TSP0175195		**508895**
TSP0175196		**508899**
TSP0175205		**508291**
TSP0175205		**509589**
TSP0175209		**508879**
TSP0175210		**509706**
TSP0175211		**509502**
TSP0175211M		**509502**
TSP0175212		**509502**
TSP0175213		**509503**
TSP0175215		**509695**
TSP0175220		**509941**
TSP0175243		**508909**
TSP0175244		**509717**
TSP0175252		**509563**
TSP0175256		**509404**
TSP0175258		**509727**
TSP0175259		**509340**
TSP0175261		**509500**
TSP0175264		**509499**
TSP0175265		**508607**
TSP0175288		**509403**
TSP0175293		**509709**
TSP0175295		**509411**
TSP0175307		**509501**
TSP0175310		**509714**
TSP0175314		**509529**
TSP0175315		**509527**
TSP0175316		**509691**
TSP0175317		**509591**
TSP0175318		**509692**
TSP0175320		**509693**
TSP0175321		**509590**
TSP0175322		**509569**
TSP0175326		**509712**
TSP0175327		**509907**
TSP0175328		**509524**
TSP0175328		**509525**
TSP0175330		**509593**
TSP0175331		**509696**
TSP0175332		**509594**
TSP0175336		**509701**
TSP0175337		**509790**
TSP0175338		**509704**

OE IAM	PROD	Valeo
DELPHI (.../...)		
TSP0175339		**509549**
TSP0175340		**509592**
TSP0175341		**509893**
TSP0175342		**509717**
TSP0175344		**509719**
TSP0175345		**509718**
TSP0175346		**508812**
TSP0175347		**509728**
TSP0175348		**509606**
TSP0175350		**509528**
TSP0175351		**509794**
TSP0175352		**508882**
TSP0175353		**509920**
TSP0175354		**509931**
TSP0175357		**509792**
TSP0175359		**509929**
TSP0175360		**509933**
TSP0175361		**509916**
TSP0175362		**509791**
TSP0175363		**509919**
TSP0175363		**509924**
TSP0175364		**509942**
TSP0175365		**509892**
TSP0175368		**509954**
TSP0175369		**509793**
TSP0175370		**509926**
TSP0175396		**509705**
TSP0175603M		**509733**
TSP0175616		**508914**
TSP0175630M		**509502**
TSP0175638M		**509497**
TSP0175640M		**509524**
TSP0175640M		**509791**
TSP0175641M		**509696**
TSP0175643M		**509593**
TSP0175645M		**509719**
TSP0175649M		**509704**
TSP0175650M		**509592**
TSP0175662M		**509790**
TSP0175663M		**509793**
TSP0175664M		**509701**
TSP0175665M		**508812**
TSP0175666M		**509705**
TSP0175668M		**509926**
TSP0175676M		**509792**
TSP0175680M		**509402**
TSP0175681M		**509892**
TSP0175686M		**509689**
TSP0175687M		**509916**
TSP0175688M		**509794**
TSP0175710M		**509919**
TSP0225011		**816967**
TSP0225018		**817248**
TSP0225021		**817230**
TSP0225023		**816803**
TSP0225026		**816992**
TSP0225030		**816948**
TSP0225046		**816902**
TSP0225055		**816835**
TSP0225058		**816866**

OE IAM	PROD	Valeo
DELPHI (.../...)		
TSP0225061		**816867**
TSP0225063		**817061**
TSP0225064		**816756**
TSP0225065		**816912**
TSP0225067		**817507**
TSP0225072		**816910**
TSP0225078		**817675**
TSP0225100		**816908**
TSP0225104		**817799**
TSP0225105		**817670**
TSP0225108		**817527**
TSP02251091		**818009**
TSP0225110		**816852**
TSP0225111		**817225**
TSP0225112		**817232**
TSP0225113		**817244**
TSP0225117		**816984**
TSP0225117		**817042**
TSP0225118		**817383**
TSP0225119		**816964**
TSP0225120		**816850**
TSP0225124		**816949**
TSP0225125		**816891**
TSP0225126		**817011**
TSP0225131		**817171**
TSP0225135		**816945**
TSP0225140		**817197**
TSP0225141		**816921**
TSP0225141M		**817670**
TSP0225143		**817559**
TSP0225151		**818099**
TSP0225152		**816948**
TSP0225153		**817073**
TSP0225155		**816922**
TSP0225173		**816977**
TSP0225176		**817230**
TSP0225180		**817427**
TSP0225184		**817666**
TSP0225187		**817406**
TSP0225193		**816900**
TSP0225194		**817252**
TSP0225196		**817505**
TSP0225196		**818047**
TSP0225199		**817283**
TSP0225200		**816839**
TSP0225204		**817560**
TSP0225207		**818024**
TSP0225210		**817504**
TSP0225212		**818008**
TSP0225213		**816987**
TSP0225217		**817229**
TSP0225218		**817493**
TSP0225221		**817506**
TSP0225222		**817067**
TSP0225229		**817848**
TSP0225230		**817463**
TSP0225236		**817405**
TSP0225238		**817607**
TSP0225239		**816981**
TSP0225240		**816991**

OE IAM	PROD	Valeo
DELPHI (.../...)		
TSP0225243		**817023**
TSP0225247		**817015**
TSP0225249		**817288**
TSP0225250		**817667**
TSP0225259		**818019**
TSP0225261		**818191**
TSP0225262		**817384**
TSP0225263		**816985**
TSP0225264		**818007**
TSP0225268		**817684**
TSP0225269		**817385**
TSP0225271		**817685**
TSP0225275		**817232**
TSP0225292		**818036**
TSP0225307		**817386**
TSP0225327		**817563**
TSP0225328		**817492**
TSP0225329		**817848**
TSP0225330		**817235**
TSP0225350		**817253**
TSP0225354		**816924**
TSP0225357		**817375**
TSP0225359		**816863**
TSP0225360		**817428**
TSP0225361		**818030**
TSP0225363		**816865**
TSP0225366		**818031**
TSP0225369		**816885**
TSP0225372		**817247**
TSP0225373		**817246**
TSP0225390		**817674**
TSP0225391		**816910**
TSP0225405		**817818**
TSP0225406		**817569**
TSP0225407		**817570**
TSP0225410		**817561**
TSP0225411		**817508**
TSP0225412		**817655**
TSP0225416		**818006**
TSP0225419		**817567**
TSP0225432		**817562**
TSP0225434		**817458**
TSP0225436		**817603**
TSP0225442		**816962**
TSP0225443		**818025**
TSP0225446		**817245**
TSP0225453		**817679**
TSP0225455		**817665**
TSP0225456		**817840**
TSP0225458		**817669**
TSP0225459		**817664**
TSP0225459		**818195**
TSP0225460		**817493**
TSP0225461		**818004**
TSP0225463		**817644**
TSP0225463		**817647**
TSP0225464		**814170**
TSP0225464		**817644**
TSP0225464		**817648**
TSP0225465		**817568**

OE IAM	PROD	Valeo
DELPHI (.../...)		
TSP0225466		**817509**
TSP0225471		**816996**
TSP0225473		**817657**
TSP0225477		**817609**
TSP0225478		**818047**
TSP0225481		**814095**
TSP0225482		**817777**
TSP0225483		**817659**
TSP0225484		**817809**
TSP0225485		**817575**
TSP0225486		**817445**
TSP0225491		**818050**
TSP0225494		**817837**
TSP0225495		**817843**
TSP0225498		**817844**
TSP0225499		**817464**
TSP0225500		**818017**
TSP0225501		**818021**
TSP0225503		**818003**
TSP0225504		**817610**
TSP0225505		**817741**
TSP0225507		**817477**
TSP0225508		**817686**
TSP0225509		**817446**
TSP0225510		**817701**
TSP0225511		**817741**
TSP0225514		**818018**
TSP0225519		**818020**
TSP0225520		**818046**
TSP0225524		**818023**
TSP0225529		**818003**
TSP0225530		**817547**
TSP0225531		**818093**
TSP0225532		**817839**
TSP0225533		**817847**
TSP0225534		**817689**
TSP0225535		**817065**
TSP0225536		**817524**
TSP0225537		**817526**
TSP0225538		**818029**
TSP0225539		**817731**
TSP0225540		**817601**
TSP0225541		**817608**
TSP0225543		**817806**
TSP0225544		**818187**
TSP0225545		**814011**
TSP0225547		**817383**
TSP0225548		**818170**
TSP0225548		**814366**
TSP0225549		**818171**
TSP0225551		**818192**
TSP0225552		**818193**
TSP0225554		**818005**
TSP0225565		**817577**
TSP0225566		**817798**
TSP0225567		**814014**
TSP0225568		**817602**
TSP0225569		**817645**
TSP0225576		**814086**
TSP0225592		**817824**

OE IAM	PROD	Valeo
DELPHI (.../...)		
TSP0225594		**817703**
TSP0225595		**817579**
TSP0225618		**817838**
TSP0225619		**814006**
TSP0225642		**818015**
TSP0225643		**818013**
TSP0225643		**818014**
TSP0225657		**818200**
TSP0225663		**814363**
TSP0225663		**814365**
TSP0226109M		**818004**
TSP0226111M		**817464**
TSP0226112M		**817849**
TSP0226116M		**814095**
TSP0226117M		**817657**
TSP0226178M		**818020**
TSP0226179M		**817842**
TSP0226180M		**817602**
TSP0226181M		**817645**
TSP0226183M		**817582**
TSP0226187M		**817610**
TSP0226187M		**818118**
TSP0226190M		**817686**
TSP0226191M		**817777**
TSP0226192M		**817806**
TSP0226196M		**818000**
TSP0226196M		**818001**
TSP0226198M		**817839**
TSP0226199M		**817847**
TSP0226200M		**818050**
TSP0226203M		**817577**
TSP0226204M		**817661**
TSP0226205M		**817687**
TSP0226207M		**818114**
TSP0226210M		**818046**
TSP0325001		**698199**
TSP0325002		**698174**
TSP0325003		**698164**
TSP0325003C		**715578**
TSP0325004		**698159**
TSP0325004		**698885**
TSP0325004C		**698686**
TSP0325005		**698171**
TSP0325006		**698170**
TSP0325007		**698146**
TSP0325009		**698197**
TSP0325009C		**698687**
TSP0325010		**698198**
TSP0325011		**698168**
TSP0325011		**698779**
TSP0325011C		**698745**
TSP0325012		**698201**
TSP0325012		**715617**
TSP0325014		**698688**
TSP0325015		**698165**
TSP0325015C		**715632**
TSP0325016		**698166**
TSP0325017		**698746**
TSP0325017		**698167**
TSP0325018		**698235**

OE IAM	PROD	Valeo
DELPHI (.../...)		
TSP0325019		**698203**
TSP0325019C		**698748**
TSP0325020		**698173**
TSP0325021		**698149**
TSP0325021		**698176**
TSP0325022		**715653**
TSP0325023		**698160**
TSP0325024		**698163**
TSP0325026		**698202**
TSP0325027C		**698716**
TSP0325028		**698662**
TSP0325028C		**698709**
TSP0325029		**698247**
TSP0325029C		**698696**
TSP0325031		**698279**
TSP0325032		**698819**
TSP0325033		**698196**
TSP0325034		**698255**
TSP0325034C		**715538**
TSP0325035		**698177**
TSP0325036		**698290**
TSP0325037		**698276**
TSP0325038C		**698246**
TSP0325039		**698682**
TSP0325040		**698684**
TSP0325042		**698858**
TSP0325043		**698691**
TSP0325044		**698454**
TSP0325047		**698772**
TSP0325047C		**715531**
TSP0325048		**698487**
TSP0325048C		**698695**
TSP0325050		**698753**
TSP0325050		**715549**
TSP0325051		**698663**
TSP0325051C		**698708**
TSP0325052		**698860**
TSP0325053		**698859**
TSP0325054		**698865**
TSP0325055		**715514**
TSP0325056		**698723**
TSP0325058		**698770**
TSP0325059		**698869**
TSP0325060		**715530**
TSP0325061		**698475**
TSP0325061C		**698744**
TSP0325062		**698488**
TSP0325062C		**698749**
TSP0325063		**715633**
TSP0325065		**698790**
TSP0325065		**698791**
TSP0325072		**698707**
TSP0325072C		**698707**
TSP0325074		**698172**
TSP0325077		**698840**
TSP0325079		**698535**
TSP0325080		**698774**
TSP0325081		**698815**
TSP0325082		**698681**
TSP0325083		**698700**

OE IAM	PROD	Valeo
DELPHI (.../...)		
TSP0325083C		**698743**
TSP0325084		**698512**
TSP0325085		**698680**
TSP0325085C		**715612**
TSP0325086		**698879**
TSP0325088		**715512**
TSP0325092		**715646**
TSP0325098		**698712**
TSP0325101		**698777**
TSP0325102		**698773**
TSP0325105		**698878**
TSP0325106		**698769**
TSP0325107		**698169**
TSP0325107C		**698697**
TSP0325108		**698734**
TSP0325110C		**698747**
TSP0325111		**698685**
TSP0325111C		**698739**
TSP0325112		**698606**
TSP0325112C		**698683**
TSP0325113		**698657**
TSP0325113		**715629**
TSP0325114		**698731**
TSP0325116		**698692**
TSP0325119		**698890**
TSP0325119		**698891**
TSP0325122		**698711**
TSP0325122		**698877**
TSP0325123		**698664**
TSP0325123C		**698714**
TSP0325124		**698594**
TSP0325124C		**698715**
TSP0325128		**698796**
TSP0325129		**698771**
TSP0325139		**698694**
TSP0325139C		**698693**
TSP0325140		**698762**
TSP0325141		**698735**
TSP0325146		**715509**
TSP0325148		**698795**
TSP0325149		**715619**
TSP0325151		**698794**
TSP0325152		**698867**
TSP0325153		**698868**
TSP0325154		**698689**
TSP0325155		**698489**
TSP0325155C		**698750**
TSP0325158		**715577**
TSP0325159		**698724**
TSP0325159C		**698725**
TSP0325161		**698775**
TSP0325161C		**698776**
TSP0325162		**698738**
TSP0325162C		**715558**
TSP0325163		**698866**
TSP0325164		**698882**
TSP0325164		**715510**
TSP0325165		**715594**
TSP0325166		**698751**
TSP0325167		**698799**

OE IAM	PROD	Valeo
DELPHI (.../...)		
TSP0325167		**698817**
TSP0325168		**715598**
TSP0325171		**698876**
TSP0325172		**698737**
TSP0325174		**698800**
TSP0325174C		**698801**
TSP0325175		**715619**
TSP0325176		**698870**
TSP0325176C		**715679**
TSP0325178		**698753**
TSP0325178C		**698753**
TSP0325179		**715529**
TSP0325180		**715627**
TSP0325180C		**715628**
TSP0325181		**715575**
TSP0325182		**715524**
TSP0325183		**698884**
TSP0325184		**715502**
TSP0325184C		**715503**
TSP0325185		**698802**
TSP0325186		**715506**
TSP0325186C		**715506**
TSP0325187		**715505**
TSP0325188		**715500**
TSP0325189		**698874**
TSP0325189C		**698875**
TSP0325190		**715534**
TSP0325191		**698871**
TSP0325193		**715513**
TSP0325194		**698730**
TSP0325194C		**715539**
TSP0325195		**698736**
TSP0325195C		**698736**
TSP0325196		**698777**
TSP0325196		**698778**
TSP0325198		**715508**
TSP0325199C		**715544**
TSP0325200		**715643**
TSP0325201		**715551**
TSP0325201C		**715680**
TSP0325202		**698892**
TSP0325203		**715522**
TSP0325204		**715540**
TSP0325205		**715553**
TSP0325205C		**715552**
TSP0325206		**715515**
TSP0325207		**715532**
TSP0325207C		**715533**
TSP0325208		**698702**
TSP0325208C		**698741**
TSP0325209		**715535**
TSP0325211		**715517**
TSP0325212		**698863**
TSP0325212C		**698864**
TSP0325213		**698540**
TSP0325213C		**698541**
TSP0325214		**715573**
TSP0325221		**715596**
TSP0325222		**715521**
TSP0325223		**698888**

OE IAM	PROD	Valeo
DELPHI (.../...)		
TSP0325224		**715639**
TSP0325225		**715518**
TSP0325225C		**715519**
TSP0325226		**715597**
TSP0325226C		**715635**
TSP0325227		**715559**
TSP0325227C		**715559**
TSP0325228		**715631**
TSP0325229C		**715556**
TSP0325229C		**715557**
TSP0325231		**715609**
TSP0325232		**715619**
TSP0325232		**715620**
TSP0325232C		**715550**
TSP0325238		**715588**
TSP0325239		**715579**
TSP0325239C		**715580**
TSP0325240		**715581**
TSP0325240C		**698768**
TSP0325242		**715587**
TSP0325243		**715648**
TSP0325244		**715636**
TSP0325245		**715613**
TSP0325245		**715614**
TSP0325246		**715554**
TSP0325246C		**715555**
TSP0325247		**715590**
TSP0325249		**715537**
TSP0325250		**715592**
TSP0325252C		**715541**
TSP0325254		**715595**
TSP0325255		**715504**
TSP0325256		**698895**
TSP0325257		**715542**
TSP0325258		**715600**
TSP0325259		**715601**
TSP0325259C		**715602**
TSP0325260		**715585**
TSP0325260		**715586**
TSP0325262		**715520**
TSP0325263		**715654**
TSP0325264C		**698713**
TSP0325266		**715608**
TSP0325269		**715651**
TSP0325296		**698710**
TSP0325296C		**698839**
TSP0325299		**698886**
TSP0325300		**715525**
TSP0325305		**715511**
TSP0325305		**715658**
TSP0325305C		**715659**
TSP0325310C		**715660**
TSP0325310C		**715661**
TSP0325311		**715642**
TSP0325312		**715644**
TSP0325313		**715649**
TSP0325314C		**715607**
TSP0325315C		**715647**
TSP0325318		**715616**
TSP0435018		**508654**

OE IAM	PROD	Valeo
DELPHI (.../...)		
TSP0435041		**508665**
TSP0435058		**509477**
TSP0435064		**509662**
TSP0525160	EVA	**817719**
TSP0525503		**812326**
TSP0525506		**812154**
TSP0525507		**812149**
TSP0525510		**812285**
TSP0525511		**812284**
TSP0525512		**812146**
TSP0525515		**812303**
TSP0525516		**883965**
TSP0525521		**812278**
TSP0585007		**508635**
TSP0585008		**509488**
TSP0585015		**508643**
TSP0585029		**508641**
TSP0585069		**508651**
DENSO		
507770500		**699287**
507770600		**699288**
507772000		**699286**
507775000		**699280**
507775100		**699284**
507775200		**699284**
544070900		**699290**
544071000		**699289**
544071400		**699281**
568770200		**699279**
592475600		**699283**
592475700		**699284**
592475900		**699283**
592476000		**699284**
592577500		**699280**
2473003230		**699374**
2473003240		**699373**
2483000020		**813157**
2483000230		**813195**
2483000250		**813157**
2483000740		**813137**
2483001090		**813194**
2483001150		**699357**
4421000120		**699280**
4421000280		**699283**
4421003160		**813167**
4421004000		**813171**
4425002130		**699281**
4425002130		**699289**
4425002150		**699290**
4425002170		**699279**
4425002210		**699286**
4425004210		**699287**
4425004230		**699288**
4471000020		**699287**
4471000030		**699288**
4471000420		**699286**
4471000950		**699290**
4471000960		**699289**
4471001180		**699281**

OE IAM	PROD	Valeo
DENSO (.../...)		
4471001200		**699279**
4471001430		**699284**
4471001560		**699283**
4471001870		**813171**
4471002020		**813655**
4471002070		**699105**
4471002070		**699605**
4471002480		**699299**
4471002610		**699148**
4471002610		**699648**
4471007470		**699323**
4471007470		**699823**
4471007920		**813166**
4471008630		**813173**
4471009040		**699322**
4471009040		**699822**
4471009440		**699275**
4471009440		**699775**
4471500470		**813137**
4471700050		**699280**
4471700560		**813167**
4471700690		**699284**
4471702320		**699300**
4471703770		**699051**
4471703770		**699551**
4471703780		**699148**
4471703780		**699648**
4471703860		**699322**
4471703860		**699822**
4471705370		**813151**
4471705550		**699346**
4471705770		**699321**
4471706170		**699383**
4471706290		**699275**
4471706290		**699775**
4471706340		**813166**
4471707000		**813157**
4471707640		**699300**
4471707680		**699298**
4471707680		**699798**
4471707690		**699323**
4471707690		**699823**
4471707910		**699380**
4471707940		**699381**
4471708250		**699347**
4471708430		**813151**
4471708450		**699321**
4471708650		**699301**
4471708660		**699324**
4471708660		**699824**
4471708950		**699373**
4471708960		**699374**
4471709230		**699320**
4471709240		**699323**
4471709240		**699823**
4471709250		**699321**
4471803200		**699383**
4471804150		**813157**
4471804270		**699380**
4471805350		**699380**

OE IAM	PROD	Valeo
DENSO (.../...)		
4471805652		**813157**
4471806580		**813150**
4471807280		**699383**
4471807290		**699383**
4471902150		**813197**
4471904310		**813166**
4471904360		**699383**
4471904930		**813150**
4471905550		**813220**
4471905670		**699275**
4471905670		**699775**
4471906680		**813150**
4471907210		**813194**
4471907760		**813194**
4471907810		**699298**
4471907810		**699798**
4471908050		**813190**
4471908280		**813157**
4471908540		**813192**
4471908680		**699381**
4471908700		**699383**
4471908890		**699383**
4471909360		**699300**
4471909440		**813151**
4472208222		**813157**
4472208410		**813190**
4472600370		**813197**
4472601510		**813220**
5A0075000		**699373**
5A7875000		**813171**
5A7875200		**813171**
5A7975000		**699374**
5A7975200		**699374**
5A7975300		**813167**
5A7975600		**813167**
DCN01011		**817527**
DCN02005		**817569**
DCN02006		**817741**
DCN07005		**817464**
DCN07007		**814095**
DCN07008		**818171**
DCN07009		**817508**
DCN07010		**817042**
DCN07019		**817524**
DCN07019		**818170**
DCN07050		**814069**
DCN09010		**818009**
DCN09015		**818019**
DCN09050		**818191**
DCN09051		**818018**
DCN09070		**818021**
DCN09071		**818020**
DCN09082		**818007**
DCN09100		**817684**
DCN09102		**818017**
DCN09103		**817685**
DCN09105		**818005**
DCN09130		**812329**
DCN10005		**816992**
DCN10006		**817493**

OE IAM	PROD	Valeo
DENSO (.../...)		
DCN10007		**818046**
DCN10008		**817664**
DCN10010		**699261**
DCN12001		**818036**
DCN12002		**818037**
DCN17002		**817659**
DCN17015		**817849**
DCN17055		**816891**
DCN20005		**817505**
DCN20006		**817506**
DCN21006		**817283**
DCN21010		**817230**
DCN21011		**817229**
DCN21015		**817526**
DCN21025		**817824**
DCN23001		**818030**
DCN23002		**818029**
DCN23003		**816912**
DCN23004		**817799**
DCN23007		**817602**
DCN23008		**817428**
DCN23010		**817197**
DCN23011		**817701**
DCN23012		**817608**
DCN23013		**817509**
DCN23015		**817568**
DCN23025		**817379**
DCN32001		**817777**
DCN32016		**816967**
DCN32017		**817244**
DCN32018		**817679**
DCN32030		**817806**
DRR01010		**812279**
DRR01011		**812278**
DRR09001		**812281**
DRR09002		**812281**
DRR09010		**811075**
DRR09010		**811397**
DRR09010		**812156**
DRR09020		**811066**
DRR09030		**812023**
DRR09031		**812141**
DRR09033		**812358**
DRR09040		**811397**
DRR09041		**811065**
DRR09042		**812336**
DRR09060		**812081**
DRR09060		**812145**
DRR09070		**812211**
DRR09070		**812280**
DRR09075		**812384**
DRR09080		**812383**
DRR09081		**812303**
DRR09090		**812329**
DRR10002		**812057**
DRR20001		**812146**
DRR21001		**812338**
DRR21002		**812339**
DRR21003		**812399**
DRR21003		**883965**

OE IAM	PROD	Valeo
DENSO (.../...)		
DRR23001		**812169**
DRR23010		**883790**
DRR23011		**883790**
DRR23012		**812139**
DRR23016		**812154**
DRR33001		**812326**
DODGE		
4644365		**817015**
4644708		**812049**
4682589		**817073**
4682591		**817074**
4741218		**816991**
4758305		**817075**
4809227		**817477**
5017621		**817475**
55055866		**817406**
04596501AB		**715648**
05103600AA		**698840**
5058381AA		**715537**
5058693AA		**715735**
68033193AA		**715696**
ECO		
328		**698745**
405		**698697**
406		**698744**
419		**698708**
420		**698684**
440		**698748**
446		**698723**
451		**715619**
456		**698470**
457		**698857**
458		**698750**
459		**698246**
473		**698746**
479		**698693**
480		**698688**
487		**698791**
488		**698747**
490		**698714**
491		**698541**
494		**715612**
496		**698865**
502		**698687**
508		**698715**
510		**698749**
511		**698716**
512		**715512**
520		**698682**
521		**698683**
524		**698695**
531		**715617**
532		**698696**
542		**698739**
550		**698743**
553		**698741**
555		**698776**

OE IAM	PROD	Valeo
ECO (.../...)		
567		**715628**
568		**698883**
572		**715507**
573		**698692**
582		**715509**
585		**698864**
586		**698802**
588		**698884**
590		**698872**
591		**698890**
600		**715501**
602		**715503**
603		**715619**
609		**698877**
610		**698880**
611		**698801**
614		**698862**
615		**715508**
642		**715619**
1300		**698199**
1314		**698171**
1317		**698163**
1318		**698165**
1319		**698166**
1328		**698168**
1328		**698779**
1400		**698172**
1401		**698198**
1405		**698169**
1406		**698475**
1414		**698235**
1415		**698888**
1419		**698663**
1421		**698146**
1422		**698196**
1423		**715516**
1424		**715517**
1426		**698795**
1428		**698290**
1429		**698177**
1430		**698279**
1434		**698707**
1436		**698202**
1438		**698173**
1440		**698203**
1451		**698796**
1456		**698838**
1457		**698856**
1458		**698489**
1465		**698815**
1467		**698840**
1473		**698167**
1474		**698878**
1479		**698694**
1482		**715525**
1483		**715530**
1484		**698794**
1487		**698790**
1490		**698664**
1491		**698540**

OE IAM	PROD	Valeo
ECO (.../...)		
1492		**698657**
1494		**698680**
1498		**698690**
1499		**698691**
1500		**698454**
1501		**698535**
1501		**698867**
1502		**698197**
1504		**698276**
1506		**698512**
1508		**698594**
1510		**698488**
1512		**698771**
1521		**698606**
1522		**698738**
1524		**698487**
1529		**698149**
1531		**698201**
1532		**698247**
1540		**698858**
1542		**698685**
1543		**698894**
1544		**698731**
1547		**715522**
1550		**698700**
1552		**715524**
1553		**698702**
1555		**698775**
1558		**698770**
1564		**715527**
1566		**698892**
1567		**715627**
1568		**698882**
1568		**715510**
1572		**715506**
1579		**715521**
1585		**698863**
1590		**698871**
1591		**698891**
1592		**698866**
1593		**715526**
1598		**698895**
1599		**698868**
1600		**715500**
1609		**698876**
1610		**698879**
1611		**698800**
1614		**698861**
1625		**698174**
1632		**698769**
1642		**698681**
1644		**715624**
1652		**698734**
1652		**698869**
1323/1		**698170**
1402/1		**698164**
1411/1		**698159**
1411/1		**698679**
1411/1		**698885**
1418/1		**698662**

OE IAM	PROD	Valeo
ECO (.../...)		
1418/1		**698874**
1472/1		**698711**
1486/1		**715514**
1509/1		**698255**
1514/1		**698469**
411/1		**698686**
418/1		**698709**
418/1		**698875**
472/1		**698710**
FIAAM		
PC8001		**698160**
PC8002		**698165**
PC8003		**698146**
PC8004		**698164**
PC8005		**698159**
PC8006		**698168**
PC8007		**698166**
PC8008		**698199**
PC8010		**698167**
PC8011		**698197**
PC8012		**698201**
PC8012		**715617**
PC8013		**698174**
PC8014		**698198**
PC8015		**698171**
PC8016		**698169**
PC8017		**698196**
PC8018		**698235**
PC8019		**698815**
PC8020		**698203**
PC8022		**698173**
PC8022		**698594**
PC8023		**698149**
PC8024		**698247**
PC8028		**698202**
PC8030		**698276**
PC8031		**698170**
PC8032		**698606**
PC8035		**698475**
PC8038		**698177**
PC8038		**698279**
PC8041		**698290**
PC8043		**698487**
PC8044		**698454**
PC8046		**698663**
PC8046		**698708**
PC8047		**698662**
PC8047		**698874**
PC8049		**698731**
PC8050		**698770**
PC8051		**698858**
PC8052		**698712**
PC8053		**698489**
PC8056		**715530**
PC8058		**698840**
PC8059		**698255**
PC8060		**698488**
PC8077		**698685**
PC8079		**698773**

OE IAM	PROD	Valeo
FIAAM (.../...)		
PC8080		**698869**
PC8081		**698707**
PC8083		**698734**
PC8084		**698715**
PC8085		**698771**
PC8088		**698664**
PC8091		**698680**
PC8093		**698839**
PC8094		**698163**
PC8096		**715619**
PC8097		**698711**
PC8098		**698762**
PC8102		**698149**
PC8110		**698540**
PC8112		**698878**
PC8129		**698879**
PC8139		**715627**
PC81432		**698735**
PC8144		**698796**
PC8161		**715510**
PC8233		**698175**
PCK8036		**698688**
PCK8043		**698695**
PCK8045		**698686**
PCK8045		**698716**
PCK8053		**698750**
PCK8054		**698246**
PCK8062		**698682**
PCK8065		**698697**
PCK8066		**698696**
PCK8067		**715675**
PCK8068		**698687**
PCK8072		**698686**
PCK8073		**698746**
PCK8078		**698470**
PCK8090		**698747**
PCK8092		**698739**
PCK8095		**698774**
PCK8099		**698745**
PCK8100		**698692**
PCK8104		**698746**
PCK8109		**698714**
PCK8122		**715617**
PCK82042		**715555**
PCK8240		**715571**
FIAT		
4846601		**699599**
5893932		**812081**
5893938		**698294**
5893939		**508869**
5947797		**812023**
5947799		**812023**
5963616		**509673**
7078698		**812283**
7078711		**698691**
7079682		**698690**
7082301		**715615**
7576000		**699568**
7604446		**699715**

OE	IAM	PROD	Valeo
FIAT (.../...)			
7661840			**812337**
7685154			**812303**
7736928			**699288**
7741521			**508654**
7741901			**699287**
7742746			**508805**
7746258			**699147**
7753630			**811397**
7754055			**811397**
7754063			**811065**
7754065			**812156**
7754068			**811075**
7765865			**699286**
7767200			**699075**
7767200			**699575**
7773398			**699076**
7774059			**699598**
7788280			**508653**
7794459			**508635**
46409630			**698174**
46410020			**508658**
46412715			**698689**
46438366			**699290**
46438576			**699289**
46440250			**816985**
46442422			**698197**
46443509			**699212**
46459451			**818445**
46459581			**817386**
46476438			**509476**
46479556			**699279**
46481438			**509714**
46514137			**699281**
46514443			**699280**
46521840			**508805**
46524500			**817685**
46524949			**818462**
46525369			**699391**
46527180			**508805**
46527737			**818009**
46532988			**818019**
46533979			**508291**
46547675			**818007**
46721212			**812145**
46721374			**698198**
46721906			**509488**
46722095			**812081**
46722359			**812281**
46722498			**509490**
46722587			**812383**
46722710			**812358**
46722862			**698535**
46722928			**812280**
46722948			**698533**
46722956			**698534**
46722958			**509494**
46723042			**812211**
46723245			**698839**
46723321			**698866**
46723331			**698867**

OE	IAM	PROD	Valeo
FIAT (.../...)			
46723435			**698692**
46723435			**715686**
46723450			**812329**
46723469			**509677**
46723601			**509494**
46745058			**509589**
46745840			**817669**
46754752			**817384**
46757907			**699284**
46759036			**699311**
46768502			**698687**
46768973			**817463**
46770803			**509343**
46770818			**509344**
46770829			**698839**
46770834			**698535**
46782669			**813171**
46785772			**699283**
46786262			**699284**
46787687			**817385**
46788049			**817684**
46788052			**817685**
46794399			**698454**
46799862			**818006**
46802605			**508291**
46804655			**509606**
46809223			**699373**
46811244			**699374**
46811665			**509592**
46819144			**813167**
46820833			**818021**
46821270			**818017**
46829340			**817385**
46844822			**698710**
51708909			**818020**
51712975			**817703**
51732993			**818021**
51733013			**818020**
51733521			**509592**
51760316			**699368**
51763472			**817703**
51767143			**818005**
51782753			**818162**
51786211			**814155**
55192057			**699391**
55194880			**813197**
55700406			**818193**
55700408			**818192**
55702456			**715552**
55702456			**715553**
60601053			**699613**
60625482			**509476**
60779485			**509678**
60811242			**698199**
60812197			**698174**
60815236			**509678**
60815647			**698687**
60815788			**699284**
71712595			**698174**
71712596			**698174**

OE	IAM	PROD	Valeo
FIAT (.../...)			
71714180			**812194**
71735480			**698533**
71740363			**509592**
71740527			**817647**
71743821			**698886**
77362394			**698867**
77362540			**812336**
77363898			**812384**
77364063			**715636**
77364561			**715616**
77365763			**715723**
82403293			**508635**
82420113			**811066**
82471989			**814292**
82475806			**508655**
82478871			**508630**
82478872			**508628**
82479336			**508970**
93158460			**812075**
98453640			**699101**
578377501			**813628**
1312766080			**698858**
1312857080			**818018**
1312857080			**818191**
1321309080			**812141**
1340166080			**818018**
1347842080			**814156**
1475478080			**715530**
1475479080			**715530**
1479460080			**818444**
1481644080			**818443**
1484383080			**698738**
1486721080			**816852**
1488334080			**509525**
1489257080			**817668**
1489398080			**817579**
1497497080			**715613**
1497498080			**715614**
9464420380			**812395**
9464420480			**509854**
9566944680			**812116**
9613260680			**699236**
9613260680			**699736**
9613627780			**508697**
9614674380			**699020**
9614674380			**699520**
9616821680			**699236**
9616821680			**699736**
9617682080			**508741**
9620143680			**509484**
9626902180			**699199**
9626902180			**699699**
9640486480			**699236**
9640486480			**699736**
9655190480			**715558**
9671456680			**813317**
1400836980			**814366**
5058696AA			**715735**
6453GA			**699236**
6453GA			**699736**

OE IAM	PROD	Valeo
FIAT (.../...)		
6453GE		**699520**
9586063J10		**698886**
9586063J10000		**698886**
9655191680		**813809**
9659232180		**813812**
9659749480		**813813**
K05058693AA		**715537**
FILTRON		
K 1000		**698165**
K 1001		**715645**
K 1001A		**698746**
K 1002		**698166**
K 1004		**698164**
K 1005		**698160**
K 1006		**698885**
K 1006A		**698686**
K 1007		**698146**
K 1008		**698168**
K 1009		**698202**
K 1009A		**715675**
K 1010		**698201**
K 1011		**698860**
K 1014		**698662**
K 1014A		**698709**
K 1014A		**698875**
K 1015		**698171**
K 1016		**698169**
K 1016A		**698697**
K 1017		**698819**
K 1018		**698235**
K 1019		**698815**
K 1020		**698203**
K 1020A		**698748**
K 1022		**698173**
K 1023		**698149**
K 1024		**698247**
K 1024A		**698696**
K 1030		**698276**
K 1031		**698170**
K 1032A		**698682**
K 1032A		**698684**
K 1033		**698174**
K 1034		**698198**
K 1035		**698197**
K 1035A		**698687**
K 1037		**698794**
K 1038		**698691**
K 1039		**698704**
K 10402x		**698290**
K 10442x		**698712**
K 1047A		**698716**
K 1051		**698279**
K 1052		**698255**
K 10532x		**715531**
K 1054		**698487**
K 1054A		**698695**
K 1055		**698663**
K 1056		**698858**
K 1057		**715633**

OE IAM	PROD	Valeo
FILTRON (.../...)		
K 1058		**698878**
K 1059		**715653**
K 1060		**698734**
K 10622x		**715530**
K 1064		**715514**
K 1065		**698475**
K 1065A		**698744**
K 1066		**698488**
K 1067		**698177**
K 1068		**698163**
K 10692x		**698790**
K 1069A2x		**698791**
K 1071		**715646**
K 10722x		**698469**
K 1073A2x		**698470**
K 1075A2x		**698246**
K 1076A		**698454**
K 1077		**698172**
K 1078		**698606**
K 1078A		**698683**
K 1079		**698685**
K 1079A		**698739**
K 1081		**698711**
K 1081A		**698710**
K 1082		**698196**
K 1083		**698796**
K 1087		**698869**
K 1088		**698840**
K 1089		**698594**
K 1089A		**698715**
K 1090		**698773**
K 1093		**698664**
K 1093A		**698714**
K 1095		**698176**
K 1096		**698707**
K 1097		**698512**
K 1101		**698867**
K 1102		**698680**
K 1103A		**698692**
K 1105A2x		**698747**
K 1106		**698700**
K 1106A		**698743**
K 1107		**698731**
K 1108		**715577**
K 11092x		**715575**
K 1110		**698694**
K 1110A		**698693**
K 1111		**698800**
K 1111A		**698801**
K 11122x		**698890**
K 11122x		**698891**
K 1113		**698762**
K 1115		**698769**
K 1115A		**715676**
K 1116A		**698688**
K 1117		**698770**
K 1118A		**698792**
K 1119		**698724**
K 1119A		**698725**
K 1121		**715513**

OE IAM	PROD	Valeo
FILTRON (.../...)		
K 1122		**698866**
K 1123		**698795**
K 1125		**698540**
K 1125A		**698541**
K 1126		**698771**
K 1126A		**715512**
K 1127		**698657**
K 1128		**698738**
K 1128A		**715558**
K 1130		**698730**
K 1131		**715562**
K 1131A		**698737**
K 11342x		**715572**
K 1136		**698489**
K 1136A		**698750**
K 1137A		**698713**
K 1138		**698876**
K 1138A		**698877**
K 1140		**698888**
K 11432x		**715598**
K 1145		**698879**
K 1145A		**698880**
K 1146		**698702**
K 1146A		**698741**
K 1147A		**698884**
K 1148		**698779**
K 1148A		**698745**
K 1149		**715517**
K 1150		**715510**
K 1150		**715627**
K 1150A		**715511**
K 1151		**698175**
K 1152		**698753**
K 1154		**698882**
K 1154A		**698883**
K 1155		**715581**
K 1155A		**698768**
K 1157		**715573**
K 1159A		**698723**
K 11602x		**698863**
K 1160A2x		**698864**
K 1161		**698870**
K 11622x		**715500**
K 1162A2x		**715501**
K 1163		**698799**
K 1164		**698886**
K 11652x		**698856**
K 1165A2x		**698857**
K 1166		**715526**
K 1167		**698736**
K 1168A		**698865**
K 1169		**715502**
K 1169A		**715503**
K 1172		**715552**
K 1173		**698887**
K 1174		**715549**
K 1175		**715540**
K 1176		**698690**
K 1177		**715565**
K 1178		**715535**

OE IAM	PROD	Valeo
FILTRON (.../...)		
K 1179		**715557**
K 1179A2x		**715556**
K 1181		**715551**
K 11822x		**715525**
K 1183		**698681**
K 1187		**698868**
K 1188		**698871**
K 1189		**715532**
K 11982x		**698735**
K 1200 A2x		**715544**
K 1201A2x		**715643**
K 1202A		**715507**
K 1202A		**715506**
K 12032x		**715522**
K 1204A		**698774**
K 1205A		**715508**
K 1207		**715515**
K 12082x		**715523**
K 1210		**715550**
K 12122x		**698892**
K 1215		**715688**
K 1216A		**698802**
K 1218		**698817**
K 1220A2x		**698772**
K 1221A2x		**698740**
K 1222A2x		**698742**
K 1228		**715616**
K 1232		**715521**
K 1240A		**715546**
K 1241		**715631**
K 1248		**715649**
K 1251		**715660**
K 1255		**715559**
K 1265A		**698776**
K 1287		**715524**
K 1296A		**715519**
FORD		
1002142		**509941**
1004051		**698201**
1011633		**715028**
1011670		**812272**
1015261		**816948**
1015486		**715011**
1016565		**509482**
1018265		**699047**
1018265		**699547**
1018267		**699209**
1018496		**699048**
1018496		**699548**
1019678		**509688**
1021291		**699119**
1021291		**699619**
1022553		**817232**
1026282		**699127**
1026282		**699627**
1027438		**699119**
1027438		**699619**
1027752		**715020**
1027753		**715019**

OE IAM	PROD	Valeo
FORD (.../...)		
1027754		**715020**
1028708		**699120**
1028708		**699620**
1028888		**699205**
1029057		**816948**
1029766		**818468**
1034699		**699330**
1034699		**699830**
1035431		**699128**
1035431		**699327**
1035431		**699628**
1035431		**699827**
1035432		**699048**
1035432		**699548**
1035433		**699047**
1035433		**699547**
1035435		**699209**
1037313		**715009**
1037316		**715010**
1037612		**509665**
1038587		**715029**
1041092		**812129**
1047782		**699330**
1047782		**699830**
1055062		**715026**
1055261		**715027**
1058282		**813606**
1058283		**699119**
1058283		**699619**
1060440		**817232**
1061104		**817225**
1062248		**715017**
1062253		**698487**
1062254		**812273**
1062256		**812274**
1062340		**509502**
1062380		**817493**
1062531		**818486**
1066927		**699326**
1066927		**699826**
1067111		**813200**
1067111		**813700**
1067111		**813400**
1077753		**508888**
1078378		**817232**
1085691		**715019**
1086534		**817493**
1091719		**817232**
1092286		**715016**
1095826		**509706**
1097670		**698168**
1101899		**715030**
1101946		**816992**
1105794		**509503**
1108838		**818004**
1109561		**509695**
1113627		**698696**
1113786		**509503**
1113899		**818486**
1114283		**812275**

OE IAM	PROD	Valeo
FORD (.../...)		
1115386		**816992**
1118717		**508888**
1118718		**509695**
1119613		**698779**
1119616		**698745**
1120012		**509502**
1120030		**509502**
1120475		**715617**
1121106		**698695**
1121178		**509706**
1121714		**509696**
1123560		**699326**
1123560		**699826**
1124229		**509695**
1130332		**509502**
1132445		**715674**
1135931		**816992**
1138446		**509696**
1139654		**698695**
1142333		**817567**
1146195		**817664**
1148366		**698696**
1148792		**509934**
1148935		**509934**
1149431		**813627**
1151378		**509593**
1152392		**509503**
1152429		**817657**
1197811		**509696**
1204459		**698694**
1204464		**698693**
1206926		**812320**
1223457		**509919**
1225788		**715674**
1232914		**817567**
1232915		**817657**
1234248		**818046**
1234257		**813203**
1250627		**817493**
1253753		**818004**
1254203		**817664**
1308989		**699327**
1308989		**699827**
1311098		**817657**
1315686		**698882**
1315687		**698883**
1317081		**812367**
1320500		**509502**
1321791		**813638**
1333713		**817664**
1334194		**813711**
1334196		**818194**
1334653		**818194**
1335552		**818046**
1338167		**509593**
1341233		**813202**
1346251		**699326**
1346251		**699826**
1348012		**817657**
1353270		**715617**

OE IAM	PROD	Valeo
FORD (.../...)		
1354643		**509919**
1354952		**715510**
1354953		**715511**
1363775		**817664**
1363775		**818195**
1382861		**698695**
1383318		**814087**
1384859		**814083**
1384859		**817664**
1405765		**699120**
1405765		**699620**
1425821		**699834**
1427369		**813606**
1433151		**699327**
1433151		**699827**
1433627		**813203**
1437112		**814082**
1437620		**813737**
1439594		**813202**
1440188		**699327**
1440188		**699827**
1440713		**699837**
1459009		**698762**
1466508		**699326**
1466508		**699826**
1488903		**715674**
1491752		**698696**
1516838		**818046**
1541456		**715660**
1566997		**715661**
1630210		**715015**
1652127		**812129**
1673744		**715723**
1744933		**813740**
1744996		**813735**
1744997		**813733**
1744998		**813734**
1744999		**813736**
1745000		**813737**
1745032		**813738**
1745033		**813739**
3016497		**812275**
3306861		**508968**
3456455		**508970**
3649380		**699120**
3649380		**699620**
3856040		**508967**
3856041		**508966**
3887675		**509291**
3898063		**508889**
3933911		**699128**
3933911		**699628**
4029945		**699834**
4032669		**699128**
4032669		**699628**
4034605		**699840**
4041973		**818050**
4042575		**812332**
4042703		**698762**
4042703		**698762**

OE IAM	PROD	Valeo
FORD (.../...)		
4054456		**699209**
4124547		**699328**
4124547		**699828**
4134237		**698893**
4144369		**817232**
4166487		**812364**
4167448		**699127**
4167448		**699627**
4336114		**699328**
4336114		**699828**
4338795		**699326**
4338795		**699826**
4355325		**699335**
4416570		**698893**
4471423		**818050**
4502836		**699337**
4502836		**699837**
4586557		**699328**
4586557		**699828**
4588121		**699840**
4660554		**699327**
4660554		**699827**
4749934		**699327**
4749934		**699827**
5028225		**698707**
5028226		**698707**
5029916		**698707**
6114258		**812053**
6157285		**715018**
6183117		**812058**
6202618		**715014**
6424451		**509664**
6573814		**699671**
6775553		**812057**
6797072		**698168**
6807481		**509665**
6851006		**812219**
6926859		**699078**
7013670		**715021**
7013671		**715022**
7067762		**508736**
7085739		**509667**
7085740		**508888**
7107568		**508736**
7110379		**812276**
7112176		**715011**
7121563		**812277**
7180932		**698168**
7188530		**715024**
7188531		**715023**
7188532		**715023**
7204831		**812361**
7230473		**508807**
7232889		**508879**
7238088		**509477**
7243842		**508888**
7286932		**814289**
7291900		**812324**
7420372		**698247**
382400304		**698688**

OE IAM	PROD	Valeo
FORD (.../...)		
410077732		**715617**
1038587		**715239**
1353267		**698762**
1362640		**715245**
1405365		**814184**
1421334		**813740**
1432770		**813733**
1435790		**813739**
1437112		**814184**
1438877		**813736**
1439594		**813736**
1441291		**813738**
1444893		**813741**
1459009		**698762**
1465439		**813734**
1481851		**814360**
1490495		**813733**
1522067		**814185**
1674615		**813739**
1674618		**813738**
1677171		**813734**
1678411		**813735**
1718237		**715745**
1731790		**813738**
1748480		**715742**
1C1H19D629AA		**699127**
1C1H19D629AA		**699627**
1E0561450A		**699330**
1E0561450A		**699830**
1M2128912AA		**509593**
1S7E18476AA		**812275**
1S7H16N619		**698779**
1S7H16N619AC		**698779**
1S7H18476AA		**812275**
1S7H19497AA		**699328**
1S7H19497AA		**699828**
1S7H19710AE		**817567**
1S7H19710BB		**817657**
1S7H19D629CA		**699328**
1S7H19D629CA		**699828**
1S7H19D629DA		**699336**
1S7H19D629DA		**699836**
1S7H19D629DD		**699336**
1S7H19D629DD		**699836**
1S7H19D629EA		**699327**
1S7H19D629EA		**699827**
1S7H19E647AD		**509696**
1S7H19E647AF		**509696**
1X4H16N619		**698779**
1X4H19G244		**698745**
256H19G244AA		**698693**
278939F900		**698707**
2M2H19D629AA		**813627**
2S6119D629AD		**813638**
2S6119D629AE		**813638**
2S6H18B539AB		**812320**
2S6H19710AC		**817664**
2S6H19710AD		**814083**
2S6H19710AD		**818195**
2S6H19D629AC		**699335**

OE IAM	PROD	Valeo
FORD (.../...)		
2S6H19E647AC		**509934**
2S6H19E647AE		**509934**
3M5H19710AB		**818046**
3M5H19710CA		**818046**
3M5H19D629AA		**813733**
3M5H19D629AF		**813733**
3M5H19D629AH		**813733**
3M5H19D629AM		**813733**
3M5H19D629BE		**813733**
3M5H19D629BG		**813733**
3M5H19D629CE		**813733**
3M5H19D629CF		**813733**
3M5H19D629CP		**813733**
3M5H19D629DC		**813203**
3M5H19D629DC		**813737**
3M5H19D629DD		**813737**
3M5H19D629DE		**813737**
3M5H19D629DF		**813737**
3M5H19D629DG		**813737**
3M5H19D629DJ		**813737**
3M5H19D629GD		**813202**
3M5H19D629GD		**813736**
3M5H19D629HB		**813203**
3M5H19D629KC		**813734**
3M5H19D629KD		**813734**
3M5H19D629KE		**813734**
3M5H19D629KF		**813734**
3M5H19D629KG		**813734**
3M5H19D629PC		**813735**
3M5H19D629PD		**813735**
3M5H19D629PE		**813735**
3M5H19D629PF		**813735**
3M5H19D629PG		**813735**
3M5H19D629PH		**813735**
3M5H19D629PJ		**813735**
3M5H19D629RC		**813733**
3M5H19D629RD		**813733**
3M5H19D629RE		**813733**
3M5H19D629RF		**813733**
3M5H19D629RG		**813733**
3M5H19D629RH		**813733**
3M5H19D629RN		**813733**
3M5H19E647AE		**509919**
3M5H19E647CA		**509919**
4M5H19D629AB		**813736**
4M5H19D629AC		**813736**
4M5H19D629AD		**813736**
4M5H19D629AE		**813736**
4M5H19D629AF		**813736**
5S6119D629AA		**813711**
5S6H19710AB		**818194**
5S6H19710BB		**817664**
6C1119710AC		**814087**
6C1119710AE		**814087**
6C1119D629AD		**813740**
6C1119D629BE		**813741**
6G9119D629DB		**813739**
6G9119D629DC		**813739**
6G9119D629DD		**813739**
6G9119D629DE		**813739**

OE IAM	PROD	Valeo
FORD (.../...)		
6G9119D629GB		**813738**
6G9119D629GC		**813738**
6G9119D629KA		**813738**
6G9119D629KB		**813738**
6G9119D629KC		**813738**
6G9119D629KD		**813738**
6M5H19D629AB		**813733**
6M5H19D629AD		**813733**
7M0091800		**698696**
84FG18B539BA		**812053**
85BG18565AA		**715018**
85GG18B539CB		**812129**
89FG18B539AB		**812057**
8V6119710FA		**814197**
90GG19D566AA		**509664**
91AG18B539AA		**812058**
91AG19D629AD		**699671**
93BW18456AD		**715019**
93BW18456BC		**715020**
93BW18B539BF		**812219**
93BW19D629EA		**699048**
93BW19D629EA		**699548**
93BW19D629HA		**699047**
93BW19D629HA		**699547**
93BW19G244BB		**715674**
93GW19D566AA		**509665**
93GW19D629AA		**699120**
93GW19D629AA		**699620**
94AW19D629AB		**813606**
94AW19D629AC		**813606**
94AW19D629CA		**699119**
94AW19D629CA		**699619**
94BW19D629AB		**699209**
94BW19D629AC		**699128**
94BW19D629AC		**699628**
94BW19D629CB		**699048**
94BW19D629CB		**699548**
94BW19D629DB		**699047**
94BW19D629DB		**699547**
94BW19N619AB		**698168**
94FW19959AB		**508736**
94FW19959CB		**508879**
94FW19D629AA		**699078**
95AG18565BA		**715011**
95GG18565AA		**715021**
95GG18565BA		**715022**
95NW18456BD		**715030**
95NW18456CA		**715028**
95NW18B539AB		**812324**
95NW18B539RA		**812361**
95NW19710AE		**816948**
95NW19710AF		**816948**
95NW19D629AB		**699127**
95NW19D629AB		**699627**
95NW19D629AC		**699127**
95NW19D629AC		**699627**
95VW18456AC		**715024**
95VW18456BB		**715023**
95VW18476AB		**812276**
95VW18476BC		**812277**

OE IAM	PROD	Valeo
FORD (.../...)		
95VW19959AB		**508807**
95VW19N715AB		**509477**
96AW19D629CB		**813606**
96BW19D629AA		**699209**
96BW19D629BA		**699128**
96BW19D629BA		**699628**
96BW19D629CA		**699048**
96BW19D629CA		**699548**
96BW19D629DA		**699047**
96BW19D629DA		**699547**
96BW19E647AA		**508888**
96BW19E647DA		**509695**
96FW18B539AD		**812272**
96FW19710AC		**816992**
96FW19D629BA		**699330**
96FW19D629BA		**699830**
96FW19D629BC		**699330**
96FW19D629BC		**699830**
96FW19G2AA		**715617**
96GW19D629AA		**699120**
96GW19D629AA		**699620**
97BW19710AE		**817232**
97BW19E647CB		**508888**
97BW19E647DD		**509695**
97FW19C808AA		**509706**
97KW19710AB		**817225**
97KW19E647AR		**509503**
9S5116N619AA		**698866**
AVVR1624		**816885**
AWR5796		**817067**
EC136114Y		**698893**
EC1361J6QA		**698893**
F5HX19D990AA		**508966**
FSUH19D990AA		**508967**
JRB101070		**817549**
R11BYU19D629AA		**699834**
R12BYU19D629AA		**699703**
R13BYU19D629AA		**699627**
R14BYU19D629AA		**699709**
R15BYU19D629AA		**699547**
R16BYU19D629AA		**699628**
R17BYU19D629AA		**699548**
R18BYU19D629AA		**699830**
R1BYU19D629AA		**699826**
R20BYU19D629AA		**699837**
R21BYU19D629AA		**699827**
R22BYU19D629AA		**699620**
R23BYU19D629AA		**699687**
R25BYU19D629AA		**699828**
R26BYU19D629AA		**699836**
R37BYU19D629AA		**699615**
R38BYU19D629AA		**699616**
R39BYU19D629AA		**699804**
R7BYU19D629AA		**813606**
R8BYU19D629AA		**699619**
RM2M2H19D629AA		**813627**
STC3679		**816885**
XS4H16N619AB		**698487**
XS4H18456AD		**715016**
XS4H18456BD		**715017**

OE	IAM	PROD	Valeo
FORD (.../...)			
XS4H18476AB			**812273**
XS4H18476BB			**812274**
XS4H19497AC			**699840**
XS4H19C808AC			**509502**
XS4H19D629AA			**699326**
XS4H19D629AA			**699826**
XS4H19D629HA			**813606**
XS4H19E647AH			**509502**
XS4H19G244AA			**698695**
XS4H19N651AA			**818486**
XS7H19D629AB			**699327**
XS7H19D629AB			**699827**
XS7H19D629BA			**813636**
XS7H19D629BB			**813636**
XS7H19D629BC			**813636**
XS7H19d629BE			**813636**
XS7H19D629BF			**813636**
YC1H18B539AA			**812332**
YC1H18B539BA			**812364**
YC1H19710BA			**818050**
YC1H19D629AA			**699337**
YC1H19D629AA			**699837**
YC1H19N619AB			**698762**
YC1H19N619AB			**698762**
YL8419N619AA			**698893**
YM2119N551AB			**698696**
YM2H19C600AA			**818004**
YS4H19710BB			**817493**
YS4H19710CA			**817493**
YS4H19D629AB			**699326**
YS4H19D629AB			**699826**
YS7H19D629BA			**699840**
FORD			
F8RZ19712AA			**817232**
YS4Z19712AB			**817493**
FRAM			
CF10025			**698866**
CF10059			**715510**
CF10062			**698868**
CF10067			**698736**
CF10073			**698886**
CF10080			**715515**
CF10087			**698817**
CF10129			**715687**
CF10200			**715532**
CF102042			**715556**
CF10210			**715521**
CF102182			**698892**
CF102452			**715525**
CF10282			**715552**
CF10284			**715689**
CF10285			**715550**
CF10322			**715550**
CF10329			**715517**
CF10381			**715541**
CF10411			**715540**
CF10413			**715616**

OE	IAM	PROD	Valeo
FRAM (.../...)			
CF10420			**715636**
CF10431			**715631**
CF10436			**715601**
CF10442			**715597**
CF10450			**715552**
CF10457			**715579**
CF10471			**715638**
CF105112			**715642**
CF10526			**715526**
CF10528			**715724**
CF105342			**715649**
CF105362			**715554**
CF10597			**715595**
CF10621			**698871**
CF10627			**715524**
CF10659			**715660**
CF10763			**715542**
CF10774			**715658**
CF10776			**715691**
CF10823			**715694**
CF10917			**715559**
CF109332			**715662**
CF11119			**715721**
CF11152			**715705**
CF11166			**715654**
CF11243			**715706**
CF112472			**715523**
CF5474			**698160**
CF5475			**698165**
CF5551			**698146**
CF5662			**698164**
CF5663			**698159**
CF5663			**698160**
CF5664			**698168**
CF5664			**698779**
CF5665			**698166**
CF5816			**698167**
CF5816			**698746**
CF5817			**698201**
CF5817			**715617**
CF5817			**698201**
CF5818			**698198**
CF5819			**698197**
CF5823			**698174**
CF5824			**698684**
CF5841			**698199**
CF5842			**698169**
CF5845			**698815**
CF5846			**698203**
CF5848			**698173**
CF5848			**698594**
CF5848			**698173**
CF5849			**698149**
CF5850			**698247**
CF5863			**698202**
CF5864			**698235**
CF5893			**698276**
CF5935			**698170**
CF5972			**715531**
CF8103			**698171**

OE	IAM	PROD	Valeo
FRAM (.../...)			
CF8714			**698770**
CF8717			**698777**
CF8719			**715598**
CF8750			**698731**
CF8777			**698475**
CF8777			**698744**
CF8778			**698723**
CF8799			**698177**
CF8799			**698279**
CF8831			**698487**
CF8832			**698290**
CF8838			**698255**
CF8867			**698663**
CF8867			**698708**
CF8867			**698663**
CF8868			**698662**
CF8868			**698874**
CF8868			**698662**
CF8890			**698858**
CF8912			**698246**
CF8913			**698489**
CF8913			**698750**
CF8914			**698712**
CF8948			**715530**
CF8989			**698691**
CF9051			**698840**
CF9071			**698488**
CF9077			**698454**
CF9293			**698512**
CF9294			**698657**
CF9323			**698685**
CF9335			**698773**
CF9336			**698769**
CF9337			**698707**
CF9338			**698196**
CF9338			**698869**
CF9338			**698819**
CF9363			**698734**
CF9364			**698715**
CF9364			**698594**
CF9383			**715577**
CF9394			**698859**
CF9395			**698860**
CF9395			**715526**
CF9396			**698771**
CF9398			**698664**
CF9399			**715573**
CF9406			**698680**
CF9408			**698839**
CF9408			**698867**
CF9414			**698163**
CF9442			**698730**
CF9466			**698681**
CF9466			**715619**
CF9466			**698681**
CF9485			**698762**
CF9495			**698710**
CF9495			**698711**
CF9546			**698176**
CF9562			**698540**

OE IAM	PROD	Valeo
FRAM (.../...)		
CF9562		**698541**
CF9579		**698794**
CF9586		**698738**
CF9594		**698724**
CF9594		**715585**
CF9594		**698725**
CF9595		**698878**
CF9640		**698879**
CF9645		**698606**
CF9659		**715565**
CF9666		**698694**
CF9686		**698795**
CF9691		**698753**
CF9714		**715645**
CF9724		**715514**
CF9731		**698689**
CF9740		**715572**
CF9742		**715633**
CF9756		**698888**
CF9761		**698799**
CF9787		**715627**
CF9787		**698882**
CF9818		**698175**
CF98192		**698735**
CF9827		**715562**
CF98322		**715536**
CF9846		**698796**
CF9880		**715688**
CF9881		**715581**
CF9881		**698768**
CF9882		**715631**
CF9904		**698876**
CF9905		**698700**
CF9920		**715570**
CF9922		**698800**
CF9934		**715513**
CFA10055		**715506**
CFA10055		**715507**
CFA10067		**715610**
CFA101032		**698864**
CFA10199		**715533**
CFA102052		**715557**
CFA10206		**715503**
CFA102092		**715501**
CFA10307		**715558**
CFA10365		**715553**
CFA10366		**715613**
CFA10366		**715614**
CFA10417		**715519**
CFA104192		**715554**
CFA10435		**715702**
CFA10436		**715601**
CFA10458		**715580**
CFA104742		**715607**
CFA10527		**715511**
CFA10529		**715635**
CFA10582		**698802**
CFA10584		**698883**
CFA10612		**715608**
CFA10613		**715505**

OE IAM	PROD	Valeo
FRAM (.../...)		
CFA10621		**698872**
CFA10657		**715647**
CFA10761		**715672**
CFA10773		**715661**
CFA10775		**715659**
CFA108282		**715544**
CFA10830		**698776**
CFA10831		**715586**
CFA10934		**715600**
CFA11119		**715722**
CFA5551		**715677**
CFA5846		**698748**
CFA6404		**698747**
CFA6405		**698739**
CFA8046		**698745**
CFA8788		**698688**
CFA8831		**698695**
CFA8838		**715538**
CFA8869		**698716**
CFA8874		**698746**
CFA8875		**715632**
CFA8876		**698682**
CFA8877		**698697**
CFA8878		**698696**
CFA8879		**715675**
CFA8882		**715578**
CFA8893		**698686**
CFA8894		**698687**
CFA8912		**698246**
CFA8913		**698750**
CFA9071		**698749**
CFA9322		**698470**
CFA9364		**698715**
CFA9396		**715512**
CFA9404		**698739**
CFA9405		**698747**
CFA9406		**715612**
CFA9408		**698839**
CFA9442		**715539**
CFA9445		**698774**
CFA9495		**698710**
CFA9533		**698692**
CFA9534		**698745**
CFA9548		**698683**
CFA9562		**698541**
CFA9587		**698714**
CFA9594		**698725**
CFA9623		**715617**
CFA9665		**698870**
CFA9666		**698693**
CFA9785		**698741**
CFA97882		**698740**
CFA98252		**698742**
CFA9827		**698737**
CFA9909		**715571**
CFA9920		**698884**
CFA9921		**698801**
CFA9930		**698751**
CFA9931		**698512**

OE IAM	PROD	Valeo
HENGST		
E1901LI		**698762**
E1903LI		**698694**
E1906LI		**698735**
E1907LC		**698883**
E1907LI		**698882**
E1909LC		**698864**
E1909LI		**698863**
E190LI		**698762**
E1911LC		**698174**
E1912LC		**698778**
E1916LC		**715512**
E1918LC		**715507**
E1918LI		**715506**
E1919LC		**715621**
E1925LI		**698737**
E1990LI		**715510**
E1997LI		**715618**
E2915LC		**715619**
E2915LI		**715619**
E2945LI		**715620**
E900LC		**698686**
E900LC		**698716**
E900LI		**698160**
E900LI		**698885**
E900LI		**698159**
E901LI		**698165**
E902LI		**698166**
E903LC		**698746**
E903LI		**698167**
E904LI		**698202**
E905LI		**698164**
E907LI		**698168**
E908LC		**715617**
E908LI		**698201**
E908LI		**715617**
E909LI		**698712**
E910LC		**698709**
E910LI		**698662**
E910LI		**698874**
E911LC		**698663**
E911LC		**698708**
E912LI		**698840**
E913LC		**698744**
E913LI		**698745**
E914LC		**698697**
E914LI		**698169**
E915LC		**698684**
E916LC		**715512**
E916LI		**698290**
E917LI		**698878**
E918LC		**715507**
E918LI		**715506**
E919LC		**698696**
E919LI		**698247**
E920LI		**698770**
E921LI		**698163**
E934LI		**698197**
E936LC		**698682**
E936LI		**698606**
E939LI		**698171**

OE IAM	PROD	Valeo
HENGST (.../...)		
E940LI		**698146**
E941LC		**698695**
E941LI		**698487**
E943LI		**698197**
E951LI		**698203**
E952LI		**698173**
E953LI		**698858**
E955LC		**698683**
E955LI		**698683**
E957LI		**698704**
E959LI		**698170**
E960LC		**698246**
E961LC		**698739**
E961LI		**698685**
E962LI		**698255**
E964LC		**698774**
E965LI		**698149**
E967LI		**698177**
E970LC		**698743**
E970LI		**698700**
E971LI		**698488**
E972LC		**698710**
E972LI		**698711**
E973LI		**698199**
E977LC		**698750**
E977LI		**698489**
E978LI		**715612**
E979LI		**698279**
E983LC		**698740**
E989LC		**698741**
E989LI		**698702**
E990LC		**698541**
E990LI		**698540**
E994LC		**698725**
E994LI		**698724**
E997LC		**698715**
HONDA		
08R79S2H600		**715594**
08R79ST3600		**698196**
38800P5TG20		**699220**
38800P5TG20		**699720**
38800PDEE01		**699312**
38810P1E003		**699297**
38810P2A006		**699313**
38810P3G003		**699325**
38810PLC006		**813168**
38810PT0003		**699296**
38810PT0013		**699296**
79310ST3G01		**698830**
79330ST3E01		**509650**
79370S1AG01		**715573**
79831S04003		**698869**
79831ST3E01		**698196**
79831ST3EC1		**698196**
80100S7A013		**814267**
80100SM1A23		**814276**
80100SN7E01		**817781**
80101SCAA01		**814225**
80101SEFE11		**814159**

OE IAM	PROD	Valeo
HONDA (.../...)		
80101SEFE11		**814159**
80110S10003		**818070**
80110S1AG01		**817783**
80110S5A003		**814243**
80110S6DG01		**817780**
80110S74D00		**816921**
80110SAA003		**814241**
80110SEA003		**814242**
80110SMGE02		**814333**
80110SNBA41		**814217**
80110SO1A11		**814326**
80110SV1A11		**814302**
80110SWAA01		**814232**
80290SDCA01		**715573**
80290ST3E01		**698869**
80291S2HE01		**715594**
80291S5A003		**698735**
80291S84A01		**715593**
80291SAAE01		**698886**
80291ST3505		**698869**
80291ST3E01		**698869**
80291TF0E01		**715692**
80292S5A003		**698735**
80292S6DG01		**698735**
80292SCAE11		**698735**
80292SDCA01		**698868**
80292SFY003		**715678**
80292SHJA41		**698868**
80292SMGE01		**715540**
80292SWWG01		**698868**
80292TF0G01		**715692**
80340SD4013		**508936**
80351S04003		**508935**
80351SDAA01		**509942**
80351SM4003		**508936**
80351SS0003		**508940**
80351ST7003		**508934**
JKR100020		**698196**
JQQ100050		**817781**
JRB100180		**817781**
HYUNDAI		
9712302000		**812396**
9713307010		**715524**
9722122000		**812409**
9722122001		**812409**
9760622000		**814255**
9760622010		**814255**
9760622020		**814255**
9760622050		**814255**
9760622051		**814255**
9761037000		**715516**
9761725000		**715516**
9761938000		**698888**
9761938100		**698888**
9770122261		**813170**
9770125000		**813169**
9770129510		**813170**
9772524000		**508968**
9780102000		**509891**

OE IAM	PROD	Valeo
HYUNDAI (.../...)		
9780225000		**509892**
97030H1726		**715527**
971121C000		**715261**
971131E000		**715262**
971132L000		**715260**
971331E000		**715592**
971331J000		**715662**
971331J000		**715662**
971331P000		**715741**
971332B005		**715716**
971332D000		**715517**
971332D200		**715591**
971332E200		**715521**
971332E250		**715740**
971332E900		**715639**
971332L000		**715638**
971333J100		**715697**
971333K000		**715541**
9713817000		**812431**
971381H500		**812430**
971382E150		**812440**
971382L000		**812441**
974064A900		**715738**
976060X000		**814354**
976061700O		**818075**
976061C000		**818074**
976061C100		**818074**
976061C200		**814341**
976061E000		**814350**
976061R000		**814362**
976062B000		**814353**
976062D000		**814264**
976062E000		**814347**
976062H000		**814351**
976062H010		**814351**
976171C000		**715525**
976174H000		**715669**
976193D100		**715529**
976193D200		**715529**
'976193E000		**698888**
977010X000		**813379**
977010X100		**813368**
977010X200		**813369**
977011C100		**813350**
977011C250		**813353**
977011C600		**813358**
977012B151		**813377**
977012E000		**813357**
977012H000		**813356**
977012H100		**813366**
977012H200		**813359**
977013J010		**813364**
977013K720		**813361**
9999Z07010		**698888**
9999Z07015		**715517**
9999Z07016		**715527**
9999Z07017		**715525**
9999Z07018		**715591**
9999Z07019		**715656**
9999Z07024		**715591**

OE / IAM	PROD	Valeo
HYUNDAI (.../...)		
9999Z07025		**715541**
P87901F200		**715521**
HYUNDAI		
977014L000		**813374**
INFINITI		
272747J125		**715561**
27277CL025H		**715560**
27277Z5000		**715560**
926001CA1A		**813257**
999M1VS251		**715560**
B72000W010		**715561**
B72003Y000		**698873**
B727A79925		**715631**
B727C79925		**715561**
INNOCENTI		
7753630		**811397**
IRISBUS		
1101193		**716049**
1100372A		**716049**
1101193A		**716049**
2994769		**716063**
5006175605		**716062**
93350A		**716049**
ISUZU		
8971708040		**715569**
8973561270		**715718**
8980084420		**715718**
IVECO		
2994583		**716029**
2995964		**716028**
3799020		**716033**
3802821		**715595**
3802821		**715595**
8189330		**818038**
42537386		**698437**
42537387		**698438**
93156374		**812047**
93158460		**812075**
93162385		**716033**
93162491		**698687**
93930678		**812342**
98418120		**698511**
98418409		**812132**
98419164		**698437**
98430072		**812133**
98470504		**698438**
98482342		**815966**
99487944		**818036**
500344178		**812341**
500387947		**716033**
504022601		**818037**

OE / IAM	PROD	Valeo
IVECO (.../...)		
504024890		**716028**
504026720		**812340**
504080822		**818116**
035714B		**509271**
2994769		**716063**
2994769		**716063**
500314688		**698197**
9000709A		**716028**
IVECO BUS		
1101193		**716049**
50006175605		**716049**
1100372A		**716049**
1101193A		**716049**
93350A		**716049**
IVECO TRUCKS		
41214450		**818985**
41214450		**818985**
JAGUAR		
1X4H16N619		**698779**
2W9319G244AA		**715504**
6W83020B02AB		**715640**
6W8318D483AA		**715640**
6W8318D483AA		**715640**
C2C6884		**715504**
C2P2410		**715640**
C2S31605		**814199**
C2S5302		**818023**
C2S8619		**698779**
C2S8622		**698745**
C2Z6525		**715681**
CAC1881		**508900**
CBC2319		**508902**
JLM11343		**812072**
MF1455700380		**715681**
XR830254		**715505**
XR849205		**715505**
XR88040		**509944**
JEEP		
4797001		**508932**
4797002		**508892**
4864956		**698452**
55035772		**508891**
55036473		**818024**
55036473		**818024**
55115863		**817022**
55115864		**817023**
55115864		**818024**
55115918		**817288**
56005016		**818024**
82204691		**715670**
82208300		**715670**
5013595AA		**715670**
5013595AB		**715670**
5058381AA		**715537**

OE / IAM	PROD	Valeo
JEEP (.../...)		
5058693AA		**715735**
55037205AG		**699310**
55115918AB		**817288**
55115918AC		**817288**
68033193AA		**715696**
68079487AA		**715717**
KIA		
978013		**509945**
9713307000		**715524**
9770107100		**813375**
9770107200		**813367**
0K01161480C		**814250**
0K2A161500		**515040**
0K2FA6152X		**715522**
0K2FA6152XA		**715522**
0K2N16152X		**715618**
0K2N16152XA		**715618**
0K2NJ6152X		**715618**
0K2NJ6152XA		**715618**
0K30C61A10		**812410**
0K55261H01		**812411**
0K55261H01A		**812412**
0K9A361500C		**515044**
0K9A46152X		**715523**
0K9A46152XA		**715523**
1K52Y61E02		**509946**
9711307000		**715263**
9711307900		**715264**
971330Z000		**715740**
971331H000		**715638**
971331P000		**715741**
971332E200		**715521**
971332E910		**715639**
971332F000		**698895**
971332K000		**715691**
971333K000		**715541**
9713807000		**812436**
9713807400		**812438**
971381H500		**812430**
971384D050		**812444**
9760607000		**814346**
9760607200		**814346**
976062E000		**814347**
976062F000		**814345**
976063E000		**818080**
976063E600		**814352**
9761938100		**698888**
976193C100		**698888**
97619FD200		**715523**
977012E000		**813357**
977012F500		**813362**
977012H000		**813356**
977012H100		**813366**
977012H200		**813359**
977012K201		**813372**
977013E050		**813370**
977013E350		**813371**
977013K720		**813361**
OK53E61481A		**814270**

OE IAM	PROD	Valeo
KIA (.../...)		
OK55261460D		**814270**
OK9A56152XA		**715618**
KING LONG BUSES		
H14003495		**716064**
KNECHT/MAHLE		
LA100		**698196**
LA100		**698869**
LA102		**698489**
LA107		**698769**
LA108		**698276**
LA108		**698279**
LA109		**698681**
LA11		**698165**
LA117		**698711**
LA118		**698762**
LA118		**698762**
LA119		**698734**
LA120		**698685**
LA121		**715577**
LA121		**715577**
LA122		**698735**
LA123		**698858**
LA125		**715599**
LA126		**698689**
LA127		**698540**
LA129		**698700**
LA129/1		**698701**
LA130		**698707**
LA131		**715619**
LA131		**698796**
LA134		**698512**
LA135		**698731**
LA136		**698594**
LA137		**715645**
LA138		**698664**
LA143		**698773**
LA144		**698535**
LA144		**698867**
LA148		**716041**
LA152		**698197**
LA153		**698680**
LA154		**716036**
LA155		**698886**
LA156		**698702**
LA157		**715619**
LA157		**698795**
LA158		**698870**
LA167		**698738**
LA168/S		**715594**
LA169		**698694**
LA170		**716028**
LA171		**698724**
LA172		**715593**
LA175		**698730**
LA177		**698170**
LA180		**715534**
LA181		**698800**

OE IAM	PROD	Valeo
KNECHT/MAHLE (.../...)		
LA182		**715581**
LA183		**698893**
LA184		**698657**
LA189		**698876**
LA191/S		**715556**
LA195/S		**715525**
LA196		**715562**
LA197		**698863**
LA197/S		**698863**
LA198		**716033**
LA199		**715542**
LA21		**698166**
LA216		**698868**
LA220		**715627**
LA220		**698882**
LA221/S		**715583**
LA227		**698736**
LA229		**698871**
LA229		**698871**
LA23		**698173**
LA230		**698753**
LA234		**698861**
LA235/S		**698894**
LA235/S		**715574**
LA237		**698878**
LA239		**715500**
LA241		**698866**
LA242		**698779**
LA243		**698879**
LA248		**715502**
LA25		**698168**
LA26		**698815**
LA265		**715573**
LA269		**715565**
LA27		**698712**
LA279		**716035**
LA280		**715518**
LA282		**715653**
LA287		**698704**
LA288		**715598**
LA289		**715520**
LA291		**698859**
LA296/S		**715548**
LA298		**698895**
LA301		**715521**
LA304		**715515**
LA306		**715532**
LA306		**715552**
LA307		**715601**
LA31		**698159**
LA31		**698160**
LA31		**698885**
LA32/2		**698203**
LA32/3		**698203**
LA33		**698149**
LA34		**698174**
LA343		**715541**
LA344		**715540**
LA346/S		**698892**
LA347		**698888**

OE IAM	PROD	Valeo
KNECHT/MAHLE (.../...)		
LA348		**715689**
LA349/S		**715527**
LA35		**698198**
LA355		**716049**
LA356/S		**715523**
LA357		**716050**
LA358		**716019**
LA36		**698167**
LA360		**698817**
LA361		**715535**
LA362		**715526**
LA365/S		**715522**
LA366/S		**715545**
LA368		**715587**
LA37		**698169**
LA37/1		**715631**
LA371		**698869**
LA376		**715688**
LA377		**715536**
LA38		**715646**
LA381		**698799**
LA382		**715513**
LA384		**715528**
LA385		**715585**
LA387		**715597**
LA39		**698176**
LA391/S		**715699**
LA392/S		**715624**
LA394/S		**715569**
LA395		**715550**
LA395		**715620**
LA396		**715559**
LA40		**698177**
LA400		**715656**
LA401		**715591**
LA404		**715549**
LA408		**715609**
LA41		**698175**
LA411		**715636**
LA42/1		**715654**
LA42/1		**716010**
LA422		**698690**
LA422		**715615**
LA428/S		**715554**
LA43		**716012**
LA439		**715595**
LA44		**698163**
LA441		**715596**
LA441		**715638**
LA444/S		**715639**
LA447		**715592**
LA449		**715644**
LA45		**698164**
LA450/S		**715576**
LA451		**715547**
LA452		**715651**
LA456		**715626**
LA457		**715616**
LA46		**698606**
LA461		**715625**

OE IAM	PROD	Valeo
KNECHT/MAHLE (.../...)		
LA462		**715692**
LA463		**715660**
LA468/S		**715649**
LA469		**715667**
LA47/S		**715531**
LA471		**715524**
LA472		**715658**
LA475		**715663**
LA476		**698860**
LA48		**715633**
LA480		**715708**
LA483/S		**715642**
LA484		**715516**
LA49		**698202**
LA495		**715662**
LA50		**716006**
LA506		**715514**
LA51/S		**698790**
LA52		**698247**
LA531		**715691**
LA54		**698771**
LA54/1		**715687**
LA55		**716004**
LA56		**698197**
LA57		**698488**
LA586		**715694**
LA60		**698279**
LA624		**715588**
LA65		**698794**
LA65		**698794**
LA67		**716034**
LA71		**716007**
LA74		**698663**
LA75		**698662**
LA75		**698874**
LA76/S		**698290**
LA77		**715617**
LA77		**698201**
LA78		**698487**
LA79		**698770**
LA8		**698146**
LA8		**698657**
LA80		**698171**
LA81		**698475**
LA83		**698840**
LA83		**698840**
LA84		**698819**
LA85		**716014**
LA87		**698255**
LA9		**698235**
LA9		**698235**
LA95		**715668**
LA97		**698454**
LA98		**698777**
LAG113/S		**698890**
LAG113/S		**698891**
LAK102		**698750**
LAK107		**715676**
LAK11		**715632**
LAK117		**698710**

OE IAM	PROD	Valeo
KNECHT/MAHLE (.../...)		
LAK120		**698739**
LAK122		**698864**
LAK124		**698839**
LAK127		**698541**
LAK129		**698743**
LAK129/1		**698743**
LAK131		**715619**
LAK136		**698715**
LAK138		**698714**
LAK141		**698747**
LAK142		**698692**
LAK145		**698751**
LAK153		**715612**
LAK154		**716037**
LAK156		**698741**
LAK158		**715679**
LAK167		**715558**
LAK169		**698693**
LAK171		**698725**
LAK173		**698857**
LAK175		**715539**
LAK176		**698792**
LAK181		**698801**
LAK181/1		**715665**
LAK182		**698768**
LAK182		**715581**
LAK184		**715629**
LAK189		**698877**
LAK191/S		**715557**
LAK196		**698737**
LAK220		**715628**
LAK220		**698883**
LAK221/S		**715584**
LAK225/S		**698793**
LAK229		**698872**
LAK232		**698884**
LAK234		**698862**
LAK239		**715501**
LAK242		**698745**
LAK243		**698880**
LAK246		**715508**
LAK247		**715648**
LAK248		**715503**
LAK249		**715504**
LAK25		**698745**
LAK250		**715505**
LAK251		**698802**
LAK252		**715507**
LAK255		**698723**
LAK278/S		**715621**
LAK280		**715519**
LAK292/S		**715643**
LAK293		**715511**
LAK294		**715641**
LAK295/S		**715544**
LAK297		**715533**
LAK307		**715602**
LAK31		**698686**
LAK32/1		**698748**
LAK345		**715680**

OE IAM	PROD	Valeo
KNECHT/MAHLE (.../...)		
LAK359		**715637**
LAK36		**698746**
LAK364		**715640**
LAK367		**715590**
LAK37		**698697**
LAK385		**715586**
LAK386		**715580**
LAK387		**715702**
LAK410		**715613**
LAK410		**715614**
LAK413		**715600**
LAK426/S		**715607**
LAK428/S		**715555**
LAK43		**716011**
LAK430		**715608**
LAK436		**715630**
LAK437		**715635**
LAK44		**698679**
LAK45		**715578**
LAK454		**715681**
LAK46		**698682**
LAK46		**698684**
LAK463		**715661**
LAK467/S		**715690**
LAK472		**715659**
LAK478		**715622**
LAK485		**715546**
LAK49		**715675**
LAK52		**698696**
LAK54		**715512**
LAK54/1		**715571**
LAK54/1		**715571**
LAK56		**698687**
LAK57		**698749**
LAK59		**698748**
LAK62		**698716**
LAK62		**698776**
LAK63		**698716**
LAK64		**698688**
LAK70		**698713**
LAK73/S		**698246**
LAK74		**698708**
LAK75		**698709**
LAK75		**698875**
LAK78		**698695**
LAK8		**715677**
LAK81		**698744**
LAK85		**716015**
LAK93		**698683**
LAK96		**698774**
LAK98		**698778**
LAKG113/S		**698890**
LKK116/S		**698742**
LKK165/S		**698740**
LKK72/S		**698772**
LADA		
111808122010		**715739**
211812202010		**715682**

OE / IAM	PROD	Valeo
LAMBORGHINI		
4F0819439		**715500**
4F0819439A		**715501**
LANCIA		
4846601		**699599**
5963616		**509673**
7576000		**699568**
7684054		**812334**
7746258		**699147**
7754065		**812156**
7754068		**811075**
7765865		**699286**
7767200		**699075**
7767200		**699575**
7773398		**699076**
7774059		**699598**
7788280		**508653**
7794459		**508635**
46405414		**813628**
46409630		**698174**
46410020		**508658**
46438366		**699290**
46438576		**699289**
46442422		**698197**
46459581		**817386**
46476438		**509476**
46514137		**699281**
46514443		**699280**
46525369		**699391**
46527180		**508805**
46721047		**698688**
46721374		**698198**
46721906		**509488**
46722335		**698688**
46722498		**509490**
46722928		**812280**
46723024		**698751**
46723331		**698867**
46782669		**813171**
46811665		**509592**
46820833		**818021**
51708843		**814198**
51733521		**509592**
60607289		**699174**
60607289		**699674**
60625482		**509476**
60653641		**698687**
60653641		**698197**
60662250		**508805**
60678468		**817580**
60811242		**698199**
60812197		**698174**
60812379		**508630**
60815099		**812400**
60815647		**698687**
71712595		**698174**
71712596		**698174**
71740363		**509592**
77362394		**698867**
82403293		**508635**

OE / IAM	PROD	Valeo
LANCIA (.../...)		
82420113		**811066**
82475806		**508655**
82478872		**508628**
82479336		**508970**
98453640		**699101**
1475478080		**715530**
1475479080		**715530**
1479460080		**818444**
1481644080		**818443**
1484383080		**698738**
1486721080		**816852**
1489257080		**817668**
1489398080		**817579**
9464420380		**812395**
9464420480		**509854**
9566944680		**812116**
9613260680		**699236**
9613260680		**699736**
9613627780		**508697**
9617682080		**508741**
9620143680		**509484**
9626902180		**699199**
9626902180		**699699**
9655190480		**715558**
1440143080		**814366**
6453GA		**699236**
6453GA		**699736**
K05058693AA		**715735**
LAND ROVER		
30733892		**715597**
64521385172		**699148**
64521385172		**699648**
6G9N180543BA		**715597**
AWR1374		**509690**
AWR1624		**816885**
AWR5796		**817067**
BTR8037		**715598**
ERR4375		**699148**
ERR4375		**699648**
ETC7994		**699635**
JEF100150		**812268**
JEF500010		**812418**
JGO000021		**509505**
JKR100200		**698799**
JKR100280		**698817**
JKR500010		**715518**
JKR500020		**715519**
JMO000010		**698776**
JNB000060		**715007**
JPB000040A		**813832**
JPB101460		**699347**
JPB500120		**699347**
JQB000160		**515131**
JRB100790		**818025**
JRB100790		**818025**
JRB101070		**817549**
JRB500080		**817549**
JRJ100410		**509528**
JRJ100550		**509566**

OE / IAM	PROD	Valeo
LAND ROVER (.../...)		
JRJ100760		**509499**
JRW000020		**814165**
LR000566		**814184**
LR000899		**715597**
LR000901		**715702**
LR019192		**715597**
LR019589		**715702**
STC3679		**816885**
LAND ROVER		
JGC500030		**715230**
JGM100110		**515088**
STC3259		**509657**
LDV		
589150001		**715655**
LEXUS		
8713930010		**715542**
8713930040		**715620**
8713933010		**715619**
8713948020		**715542**
8713949010		**698796**
8713950010		**715542**
8713950030		**715641**
8713950060		**715730**
8846050120		**814310**
8846053030		**814226**
8847150010		**508805**
8847417010		**509794**
8847447010		**509794**
8850530100		**715542**
8850530100		**715729**
8856802020		**698796**
72880AJ000		**715620**
72880XA000		**698796**
72880XA000A		**698796**
871394701083		**698796**
8713950060		**715730**
87139YZZ01		**715641**
87139YZZ04		**715542**
87139YZZ08		**715620**
MAN		
8301783		**815971**
51779707011		**813022**
51779707014		**813022**
81619010056		**812351**
81619010064		**812351**
81619010065		**812346**
81619010067		**812350**
81619016166		**812352**
81619066012		**813014**
81619106012		**815971**
81619106017		**815972**
81619200011		**818043**
81619200012		**818040**
81619200018		**818033**

OE IAM	PROD	Valeo
MAN (.../...)		
81619200023		**818033**
81619200027		**818033**
81619200029		**818033**
81619200030		**818033**
81619206011		**818041**
81619206018		**818042**
81619206019		**818044**
81619206026		**818044**
MAN (BUS)		
18357047		**716046**
81619100011		**716034**
81619100018		**716036**
81619100019		**716037**
81779100012		**716057**
81779100016		**716049**
81779720148		**716049**
81779720155		**716057**
83779720656		**716064**
88779100002		**716048**
88779100003		**716047**
0018355547		**716056**
1101891A		**716046**
1101891B		**716046**
A0018357047		**716046**
MAN TRUCKS		
81619100011		**716034**
81619100018		**716036**
81619100019		**716037**
85619500025		**716035**
MANN HUMMEL		
CU10062		**698469**
CU1009		**715598**
CU15001		**715709**
CU1519		**715656**
CU1611		**715637**
CU1629		**715721**
CU1719		**715526**
CU1722		**716039**
CU1738		**698794**
CU1738		**698794**
CU18062		**715576**
CU1823		**715594**
CU1828		**698681**
CU1828		**715550**
CU1829		**698753**
CU1830		**715603**
CU1835		**698886**
CU190003		**715530**
CU19002		**715738**
CU190042		**715714**
CU1910		**715524**
CU1912		**715689**
CU1915		**715688**
CU1919		**715620**
CU19312		**698290**
CU1936		**715559**

OE IAM	PROD	Valeo
MANN HUMMEL (.../...)		
CU20010		**715707**
CU2012		**715588**
CU2015		**715565**
CU2026		**698866**
CU20332		**698891**
CU2035		**698795**
CU2038		**698160**
CU2038		**715653**
CU2040		**715616**
CU2043		**698870**
CU210002		**715556**
CU21001		**715572**
CU210012		**715572**
CU2101		**716009**
CU21062		**715545**
CU2127		**715563**
CU2129		**715668**
CU2131		**698796**
CU2131		**715619**
CU2132		**715736**
CU2137		**698769**
CU2138		**715564**
CU2138		**715609**
CU2141		**715631**
CU2143		**698876**
CU2145		**715551**
CU2149		**698594**
CU2184		**716041**
CU220012		**698892**
CU22004		**715625**
CU22007		**715708**
CU22010		**715718**
CU22013		**715742**
CU22162		**715569**
CU2218		**716047**
CU22242		**698712**
CU2225		**698146**
CU2227		**715735**
CU2232		**715532**
CU2240		**698512**
CU2243		**715552**
CU2245		**698657**
CU2253		**698196**
CU2253		**698819**
CU230002		**715548**
CU230002		**715543**
CU23010		**715741**
CU23011		**715706**
CU2303		**716001**
CU2304		**716040**
CU2316		**698730**
CU2321		**715618**
CU2326		**698773**
CU2327		**698735**
CU23272		**698735**
CU2329		**715534**
CU2330		**715535**
CU2331		**715592**
CU2335		**698867**
CU2336		**715521**

OE IAM	PROD	Valeo
MANN HUMMEL (.../...)		
CU2337		**698860**
CU2339		**698861**
CU2344		**698691**
CU2345		**698734**
CU2349		**715645**
CU2351		**698869**
CU2356		**715517**
CU2358		**698868**
CU2362		**715541**
CU24001		**715743**
CU24004		**715740**
CU24006		**715745**
CU2422		**715686**
CU2423		**698817**
CU2424		**698279**
CU2424		**698276**
CU2425		**698175**
CU2430		**698736**
CU2433		**698693**
CU2433		**698694**
CU2435		**698279**
CU2436		**715660**
CU2440		**715510**
CU2440		**715627**
CU2442		**715658**
CU2450		**715579**
CU2454		**715540**
CU2504		**698690**
CU25062		**715525**
CU2516		**715549**
CU2520		**698819**
CU2520		**698196**
CU25212		**715523**
CU25212		**715618**
CU2525		**698173**
CU2525/1		**698173**
CU2530		**698707**
CU25332		**715715**
CU2534		**716007**
CU25422		**715529**
CU2544		**715636**
CU2545		**698685**
CU2559		**698882**
CU260002		**715522**
CU2600082		**715726**
CU26004		**715739**
CU26006		**715744**
CU26010		**715737**
CU2620		**715724**
CU2622		**715654**
CU2623		**715520**
CU2628		**715516**
CU2630		**698731**
CU2631		**715638**
CU2634		**715591**
CU2642		**698878**
CU2645		**698859**
CU2647		**698888**
CU2650		**698770**
CU2672		**698163**

OE IAM	PROD	Valeo
MANN HUMMEL (.../...)		
CU2672		**698679**
CU2680		**698680**
CU27007		**715716**
CU27008		**715717**
CU2709		**715528**
CU2733		**715597**
CU2734		**698177**
CU2734		**698276**
CU27452		**715531**
CU2747		**715518**
CU2757		**698663**
CU2757		**698708**
CU2785		**716045**
CU28082		**715561**
CU2835		**698171**
CU2839		**715573**
CU2842		**715581**
CU2842		**715581**
CU2855		**698771**
CU2855/1		**715687**
CU2861		**698235**
CU2882		**698159**
CU2882		**698885**
CU2897		**698169**
CU2930		**698176**
CU2939		**698800**
CU2940		**698664**
CU29412		**715583**
CU2945		**698255**
CU2949		**698790**
CU29492		**698790**
CU2951		**698197**
CU29511		**698689**
CU2956		**698197**
CU3001		**716000**
CU3020		**698454**
CU3023		**715500**
CU30232		**715500**
CU3032		**698149**
CU3037		**698606**
CU30392		**715554**
CU3040		**715587**
CU3054		**698662**
CU3054		**698709**
CU3054		**698874**
CU3059		**698167**
CU31242		**698856**
CU3132		**716006**
CU3136		**698172**
CU3136		**698199**
CU3138		**698198**
CU3139		**698863**
CU31392		**698863**
CU3172		**698702**
CU3192		**715683**
CU32001		**716066**
CU3337		**698711**
CU3338		**698170**
CU3340		**698203**
CU3423		**716016**

OE IAM	PROD	Valeo
MANN HUMMEL (.../...)		
CU3435		**715646**
CU3448		**698488**
CU3454		**715513**
CU3454		**715513**
CU3455		**698166**
CU3461		**698700**
CU34611		**698701**
CU3518		**698540**
CU3540		**698871**
CU3540		**698871**
CU3540		**698871**
CU3553		**698201**
CU3554		**715617**
CU3567		**698487**
CU3569		**715601**
CU36422		**698838**
CU3649		**698762**
CU3649		**698762**
CU37230		**716035**
CU3759		**715577**
CU3759		**715577**
CU3780		**698475**
CU38222		**715684**
CU3840		**715562**
CU3847		**715613**
CU3847		**715614**
CU3855		**716012**
CU3858		**698840**
CU3858		**698840**
CU3869		**716010**
CU3942		**698174**
CU3943		**698879**
CU3955		**698164**
CU3959		**716064**
CU4007		**698704**
CU40071		**698706**
CU40110		**716034**
CU4036		**716048**
CU4151		**698202**
CU4179		**698738**
CU4228		**716004**
CU4251		**698165**
CU4408		**716018**
CU4416		**715514**
CU4436		**715585**
CU4442		**698858**
CU4466		**716033**
CU4469		**716019**
CU4594		**716028**
CU4624		**698724**
CU4627		**716049**
CU4662		**716046**
CU4727		**715670**
CU4795		**716036**
CU5096		**716050**
CU5141		**698779**
CU5257		**698168**
CU5366		**698775**
CU5480		**698247**
CU5809		**716021**

OE IAM	PROD	Valeo
MANN HUMMEL (.../...)		
CU5877		**716014**
CU6724		**698489**
CU8430		**715502**
CUK1629		**715722**
CUK180002		**698740**
CUK18202		**698747**
CUK1830		**698802**
CUK190042		**715713**
CUK1919		**715730**
CUK19312		**715568**
CUK1936		**715732**
CUK200002		**698742**
CUK20010		**715710**
CUK2026		**715723**
CUK2030		**715681**
CUK2032		**698774**
CUK2043		**715679**
CUK210002		**715557**
CUK2131		**715619**
CUK2132		**715608**
CUK2137		**715676**
CUK2143		**698877**
CUK2145		**715680**
CUK2149		**698715**
CUK220002		**698772**
CUK220084		**715712**
CUK2226		**715619**
CUK2227		**715537**
CUK2230		**715509**
CUK2230/1		**715622**
CUK2231		**715546**
CUK2232		**715533**
CUK22412		**715621**
CUK2243		**715553**
CUK2245		**715629**
CUK230042		**715728**
CUK2316		**715539**
CUK2335		**698839**
CUK2338		**698777**
CUK2338		**698778**
CUK2339		**698862**
CUK2358		**715678**
CUK2422		**698692**
CUK2430		**715610**
CUK2433		**698694**
CUK2433		**698693**
CUK2440		**715511**
CUK2440		**715628**
CUK2442		**715659**
CUK2450		**715580**
CUK25332		**715690**
CUK2534		**716008**
CUK2545		**698739**
CUK2551		**715600**
CUK2559		**698883**
CUK26010		**715727**
CUK260132		**715734**
CUK2622		**715731**
CUK2641		**715733**
CUK26462		**715544**

OE IAM	PROD	Valeo
MANN HUMMEL (.../...)		
CUK2672		**698679**
CUK2680		**715612**
CUK27222		**715643**
CUK27362		**698246**
CUK2742		**715635**
CUK2742		**715635**
CUK2743		**715673**
CUK2747		**715519**
CUK2842		**698768**
CUK2842		**698768**
CUK2855		**715512**
CUK28551		**715571**
CUK2862		**698716**
CUK2882		**698686**
CUK2897		**698697**
CUK2939		**698801**
CUK2939/1		**715665**
CUK2940		**698714**
CUK29412		**715584**
CUK2945		**715538**
CUK2949		**698791**
CUK29492		**698791**
CUK2951		**698687**
CUK2952		**716063**
CUK2959		**698687**
CUK3023		**715501**
CUK30232		**715501**
CUK3037		**698683**
CUK30392		**715555**
CUK3042		**698688**
CUK3054		**698875**
CUK3059		**698746**
CUK31242		**698857**
CUK3137		**715648**
CUK3139		**698864**
CUK31392		**698864**
CUK3142		**698865**
CUK3142/1		**715611**
CUK3172		**698741**
CUK3192		**698682**
CUK32001		**716065**
CUK3220		**698723**
CUK3240		**698884**
CUK3241		**698751**
CUK3337		**698710**
CUK3340		**698748**
CUK3448		**698749**
CUK3461		**698743**
CUK350002		**698793**
CUK3518		**698541**
CUK3540		**698872**
CUK3540		**698872**
CUK3554		**715617**
CUK3562		**698684**
CUK3567		**698695**
CUK3569		**715602**
CUK3621		**715508**
CUK36422		**698470**
CUK3780		**698744**
CUK3823		**716011**

OE IAM	PROD	Valeo
MANN HUMMEL (.../...)		
CUK3840		**698737**
CUK3847		**715614**
CUK3858		**716023**
CUK3943		**698880**
CUK3955		**715578**
CUK4007		**698703**
CUK40071		**698705**
CUK4054		**715507**
CUK4136		**698792**
CUK4151		**715675**
CUK4179		**715558**
CUK4251		**715632**
CUK4252		**716013**
CUK4436		**715586**
CUK4469		**716020**
CUK4594		**716029**
CUK4624		**698725**
CUK4795		**716037**
CUK5141		**698745**
CUK5257		**715674**
CUK5258		**698713**
CUK5366		**698776**
CUK5480		**698696**
CUK5877		**716015**
CUK6724		**698750**
CUK8430		**715503**
MASERATI		
382400304		**698688**
573228900		**698688**
MAYBACH		
2108300018		**715531**
MAZDA		
22696030		**814316**
410077732		**715617**
1E0061480C		**816992**
1E0061J6X		**698201**
1E0361B10C		**715026**
1E0561450A		**699330**
1E0561450A		**699830**
B01A61480		**818084**
B01W61480A		**814253**
B01W61480D		**814253**
B01W61480E		**814253**
B01W61480F		**814253**
B02H61480B		**814253**
B25F61480		**818087**
B25SF61480		**818092**
BB7C61480		**814281**
BBP261J6X		**715726**
BC1M61480		**814257**
BC1M61480A		**814257**
BC5D61J6X		**715664**
BJ3A61480A		**818088**
BK2J61480		**818086**
BP4K61480B		**814265**
BP4K61501		**509924**

OE IAM	PROD	Valeo
MAZDA (.../...)		
BP4K61J6X		**698892**
BPYK6148ZA		**814216**
BR7061480		**814278**
C10061480		**818092**
C10261J6X		**698890**
CB1261J6X		**698890**
CB1261J6X9B		**698890**
CB1261J6XA9A		**698890**
CC6461J6X		**698892**
D20161480B		**814258**
D65161J6X		**715642**
DC2161J6X		**715576**
DD1061P11		**698693**
DE9461480B		**818195**
DE94615A0		**509934**
EC1361J6XA		**698893**
EGY16148ZC		**814235**
F15161480		**814215**
GA5R61480A		**814251**
GA7H61480		**814254**
GB6H61480		**814254**
GC3N61500B		**508951**
GE4T61480A		**818085**
GE6T61J6X		**698891**
GE6T61J6XA9B		**698891**
GE7B61J6XA		**715599**
GJ5161480B		**814274**
GJ6A61480A		**818090**
GJ6A61501A		**509925**
GJ6A61K00C		**813175**
GJ6A61P119A		**715679**
GJ6A61P119B		**715679**
GJ6A61P11A		**698870**
GJ6A61P11A9B		**698870**
GJ6B61P11		**715679**
GJ6F61K00		**813176**
GJ8361500C		**508951**
GJ8361500D		**508951**
LB8361501		**508805**
LC7061480C		**814239**
LD4761480		**814266**
LDY361J6X		**715728**
LDY461J6X		**715574**
NE5161480C		**814227**
TA0561J6X		**715657**
UCY061P11		**715745**
MECAFILTER		
EKR7000		**715632**
EKR7002		**698746**
EKR7003		**715675**
EKR7004		**698686**
EKR7004		**698716**
EKR7005		**715578**
EKR7007		**715617**
EKR7017		**715677**
EKR7027		**698203**
EKR7027		**698748**
EKR7038		**698682**
EKR7040		**698875**

OE IAM	PROD	Valeo
MECAFILTER (.../...)		
EKR7047		**715538**
EKR7049		**698708**
EKR7055		**698695**
EKR7068		**698749**
EKR7073		**698744**
EKR7074		**698777**
EKR7074		**698778**
EKR7075		**715612**
EKR7076		**698739**
EKR7078		**698535**
EKR7078		**698839**
EKR7081		**698703**
EKR7092		**698683**
EKR7095		**698715**
EKR7096		**698745**
EKR7097		**698714**
EKR7098		**698750**
EKR7104		**698541**
EKR7105		**715629**
EKR7106		**698710**
EKR7106		**698711**
EKR7107		**698696**
EKR7108		**698776**
EKR7117		**715558**
EKR7118		**715512**
EKR7123		**698737**
EKR7124		**715539**
EKR7127		**698801**
EKR7128		**715511**
EKR7128		**715628**
EKR7129		**698768**
EKR7130		**698693**
EKR7131		**698877**
EKR7132		**698872**
EKR7135		**698865**
EKR7136		**698713**
EKR7137		**715506**
EKR7137		**715507**
EKR7142		**698725**
EKR7145		**698883**
EKR7146		**698741**
EKR7148		**715509**
EKR7149		**698792**
EKR7151		**715503**
EKR7156		**698723**
EKR7159		**715650**
EKR7162		**698884**
EKR7162		**715570**
EKR7163		**698862**
EKR7165		**698751**
EKR7166		**715533**
EKR7172		**715508**
EKR7174		**715519**
EKR7193		**698802**
EKR7193		**715603**
EKR7197		**715674**
EKR7218		**715613**
EKR7218		**715614**
EKR7220		**715580**
EKR7269		**715635**

OE IAM	PROD	Valeo
MECAFILTER (.../...)		
ELR7000		**698165**
ELR7001		**698166**
ELR7002		**698167**
ELR7003		**698202**
ELR7004		**698159**
ELR7004		**698160**
ELR7004		**698679**
ELR7005		**698164**
ELR7006		**698168**
ELR7007		**698201**
ELR7009		**698247**
ELR7010		**698199**
ELR7011		**698174**
ELR7013		**698684**
ELR7014		**698171**
ELR7016		**698170**
ELR7017		**698146**
ELR7018		**698858**
ELR7019		**698197**
ELR7019		**698687**
ELR7020		**698198**
ELR7022		**698688**
ELR7023		**698697**
ELR7026		**698235**
ELR7028		**698815**
ELR7029		**698173**
ELR7030		**698149**
ELR7036		**698163**
ELR7040		**698662**
ELR7040		**698874**
ELR7044		**698794**
ELR7045		**698177**
ELR7047		**698255**
ELR7048		**698279**
ELR7049		**698663**
ELR7050		**698276**
ELR7051		**698196**
ELR7051		**698819**
ELR7051		**698869**
ELR7052		**698860**
ELR7055		**698487**
ELR7056		**698878**
ELR7058		**698770**
ELR7060		**698691**
ELR7061		**698454**
ELR7068		**698488**
ELR7071		**698176**
ELR7072		**698175**
ELR7073		**698475**
ELR7075		**698680**
ELR7076		**698685**
ELR7077		**698840**
ELR7079		**698689**
ELR7081		**698704**
ELR7084		**698700**
ELR7085		**698701**
ELR7089		**715577**
ELR7092		**698606**
ELR7093		**698773**
ELR7094		**698762**

OE IAM	PROD	Valeo
MECAFILTER (.../...)		
ELR7095		**698594**
ELR7096		**698779**
ELR7097		**698664**
ELR7098		**698489**
ELR7099		**715645**
ELR7100		**698707**
ELR7101		**698512**
ELR7103		**715513**
ELR7104		**698540**
ELR7105		**698657**
ELR7108		**698775**
ELR7109		**698690**
ELR7110		**698879**
ELR7111		**715683**
ELR7113		**698734**
ELR7117		**698738**
ELR7118		**698771**
ELR7119		**698692**
ELR7120		**698867**
ELR7122		**698681**
ELR7123		**715562**
ELR7124		**698730**
ELR7125		**698817**
ELR7126		**698731**
ELR7127		**698800**
ELR7128		**715510**
ELR7128		**715627**
ELR7129		**715581**
ELR7130		**698694**
ELR7131		**698876**
ELR7132		**698871**
ELR7134		**698736**
ELR7138		**715514**
ELR7140		**715631**
ELR7142		**698724**
ELR7143		**698866**
ELR7144		**698886**
ELR7145		**698882**
ELR7146		**698702**
ELR7151		**715502**
ELR7154		**715542**
ELR7157		**698753**
ELR7159		**698796**
ELR7159		**715550**
ELR7159		**715619**
ELR7163		**698861**
ELR7164		**698795**
ELR7166		**715532**
ELR7168		**698870**
ELR7173		**698868**
ELR7176		**715565**
ELR7180		**715517**
ELR7181		**698888**
ELR7185		**715636**
ELR7187		**715552**
ELR7187		**715553**
ELR7191		**715549**
ELR7194		**715547**
ELR7195		**715540**
ELR7196		**698769**

OE IAM	PROD	Valeo
MECAFILTER (.../...)		
ELR7198		**715526**
ELR7199		**715535**
ELR7206		**715521**
ELR7207		**715541**
ELR7212		**715620**
ELR7213		**715515**
ELR7214		**715689**
ELR7215		**715615**
ELR7216		**715573**
ELR7219		**715559**
ELR7220		**715579**
ELR7244		**715667**
ELR7245		**715660**
ELR7259		**698895**
ELR7261		**715638**
ELR7263		**715658**
ELR7267		**715609**
ELR7523		**715595**
JKR7046		**715568**
JKR7066		**698470**
JKR7086		**698742**
JKR7088		**698772**
JKR7090		**698747**
JKR7091		**698791**
JKR7121		**698857**
JKR7133		**698740**
JKR7158		**715501**
JKR7161		**698864**
JKR7201		**715544**
JKR7217		**715556**
JKR7217		**715557**
JKR7231		**715607**
JKR7234		**715555**
JLR7015		**698246**
JLR7039		**698712**
JLR7046		**698290**
JLR7054		**715575**
JLR7064		**715530**
JLR7065		**698469**
JLR7080		**715684**
JLR7087		**698169**
JLR7087		**715531**
JLR7091		**698790**
JLR7116		**698891**
JLR7121		**698856**
JLR7150		**715598**
JLR7152		**698735**
JLR7158		**715500**
JLR7160		**715561**
JLR7161		**698863**
JLR7167		**715664**
JLR7190		**715569**
JLR7204		**715520**
JLR7205		**698892**
JLR7209		**715668**
JLR7210		**715572**
JLR7229		**715525**
JLR7230		**715536**
JLR7234		**715554**
JLR7243		**715649**

OE IAM	PROD	Valeo
MERCEDES		
2300311		**813654**
2300411		**813655**
2300511		**699604**
2300611		**699105**
2300611		**699605**
2301111		**699569**
2301311		**699299**
2302011		**699298**
2302011		**699798**
2303711		**813173**
2305911		**699300**
2306511		**813157**
2307011		**699298**
2307011		**699798**
2307911		**699300**
2308511		**813157**
2309011		**813157**
2309111		**813195**
2309411		**699300**
2309711		**813137**
2340811		**813031**
4798015		**816945**
8301783		**815971**
8301883		**815974**
8302083		**815975**
8306872		**508763**
8306958		**817328**
8356601		**812353**
12301011		**813695**
12303611		**813196**
12304511		**813137**
12305511		**813137**
12307911		**813195**
18305608		**698381**
18305708		**698382**
18305808		**698383**
18305908		**698384**
18352385		**698383**
18358301		**812348**
18359201		**812347**
22303311		**813137**
22303411		**813157**
22304911		**813137**
22305011		**813157**
28301508		**698217**
28301608		**698218**
28350801		**812356**
28350901		**812357**
28353101		**812299**
28355401		**812084**
28355501		**812304**
28356801		**812354**
31319501		**699552**
38350001		**812134**
38353501		**812251**
1161310001		**699688**
1248213651		**508819**
1248300118		**715684**
1248300183		**508731**
1248300283		**508731**

OE IAM	PROD	Valeo
MERCEDES (.../...)		
1248300658		**817515**
1248350047		**715684**
1298300183		**508906**
1298300283		**508907**
1408300072		**509486**
1408302158		**817517**
1408302258		**817517**
1408302358		**817517**
1408350047		**698704**
1408350147		**698703**
1408350447		**698705**
1408350547		**698706**
1638300070		**817458**
1638300170		**817458**
1638300370		**817446**
1638350047		**698778**
1638350047		**698777**
1638350247		**698777**
1648300218		**715544**
1685000354		**817504**
1685000454		**817504**
1685000854		**817659**
1685001154		**817659**
1688200542		**698841**
1688300018		**698475**
1688300084		**509493**
1688300284		**509493**
1688300458		**509396**
1688300818		**698744**
1688300858		**509411**
1698200297		**509869**
1698200442		**509784**
1698200642		**715052**
1698201342		**715051**
1698300118		**715506**
1698300218		**715507**
1698300761		**818205**
1708300083		**509717**
1715000154		**814186**
1718300418		**715508**
1718350004		**715247**
2018300083		**508594**
2018300370		**816949**
2018300684		**508637**
2028209242		**698244**
2028300018		**698169**
2028300184		**508643**
2028300283		**508909**
2028300318		**698169**
2028300570		**816900**
2028300758		**817514**
2028300770		**817492**
2028300870		**816900**
2028300970		**817562**
2028301070		**817563**
2035000154		**817849**
2035000554		**817848**
2035000654		**817849**
2035001054		**817849**
2035001154		**817849**

OE	IAM	PROD	Valeo
MERCEDES (.../...)			
2035001254			**814166**
2035001354			**817849**
2038300118			**698700**
2038300161			**812321**
2038300218			**698701**
2038300318			**698742**
2038300472			**509867**
2038300518			**698742**
2038300918			**698743**
2038350147			**509893**
2048300018			**715600**
2108200042			**698385**
2108202442			**715031**
2108203842			**715032**
2108206842			**715033**
2108211651			**509361**
2108300018			**698169**
2108300018			**715531**
2108300072			**509486**
2108300218			**698169**
2108300270			**817252**
2108300283			**508911**
2108300370			**816949**
2108300383			**509716**
2108300470			**817235**
2108300483			**508911**
2108300570			**817252**
2108300618			**698169**
2108300658	EVA		**817516**
2108300818			**698697**
2108300918			**698697**
2108300958	EVA		**817516**
2108301018			**715531**
2108301118			**698772**
2108301218			**698697**
2115000154			**818003**
2115001154			**818003**
2115001254			**818003**
2118300018			**698741**
2118300218			**698702**
2118300818			**698740**
2118350047			**509529**
2205000054			**818003**
2208300083			**509559**
2208300118			**698772**
2208300218			**698772**
2208300261			**812366**
2218300018			**715643**
2308300418			**715621**
4145000054			**817841**
4638300018			**698685**
5412300011			**813030**
6062300456			**818452**
6388350047			**715577**
6388350170			**817011**
6398350070			**817842**
6398350247			**698871**
6398350347			**698872**
6398350547			**509926**
9015000454			**816891**

OE	IAM	PROD	Valeo
MERCEDES (.../...)			
9015000554			**816891**
9015500080			**509560**
9015500180			**509562**
9018300018			**698840**
9065000054			**818173**
9068300218			**715601**
9068300318			**715602**
9425000054			**818034**
9425000154			**818034**
9425000154			**818034**
9700300283			**815973**
9705000054			**818035**
0002306511			**813657**
0002308511			**813657**
0002309011			**813657**
0012301411			**813657**
0018211360			**515076**
0018353047			**715577**
0022304511			**813258**
0022305011			**813657**
1688200897			**515075**
2035000854			**818200**
2035001654			**814368**
22307211			**813157**
81619106012			**815971**
A21083003700064			**816949**
A21083004700064			**817235**
A2115000154			**818003**
A9065000054			**818173**
B66809903			**698778**
MERCEDES			
6398350247			**698871**
6398350347			**698872**
9018300418			**716023**
0008303318			**698840**
6388350047			**715577**
9018300018			**698840**
9018300518			**698840**
MERCEDES (EVOBUS/SETRA)			
20401236			**716049**
6278350447			**716049**
88779100002			**716048**
0018255447			**716049**
0018351547			**716050**
0018352747			**716048**
0018355447			**716049**
0018355547			**716056**
0018356147			**716059**
0018356247			**716061**
0018357047			**716046**
0018357147			**716058**
0018359147			**716060**
0018359247			**716064**
1101891A			**716046**
1101891B			**716046**
H14002484			**716050**
H14002499			**716048**

OE	IAM	PROD	Valeo
MERCEDES (EVOBUS/SETRA) (.../...)			
H14003495			**716064**
MERCEDES TRUCKS			
18212560			**515080**
9408350047			**716019**
9408350147			**716020**
9608300018			**716066**
9608300118			**716065**
9738350147			**716014**
9738350247			**716021**
9738350347			**716015**
0008301118			**716010**
0008301218			**716011**
0008301318			**716012**
0008301518			**716013**
0008303418			**716012**
0008356947			**716016**
0008358947			**716017**
0018350747			**716017**
9408350247			**716018**
A9015000554			**816891**
A9408350047			**716019**
A9408350147			**716020**
A9408350247			**716018**
A9738350247			**716021**
B67582415			**716018**
MG			
JGC100150			**698830**
JGH10002			**509650**
JKR000030			**698879**
JKR000040			**698880**
JKR100020			**698196**
JKR100183			**698879**
JKR100193			**698880**
JKR100220			**698819**
JPB000040A			**813832**
JRJ100260			**508627**
JTB100220			**508659**
MICRONAIR			
MC505			**698697**
MC511			**715578**
MC514			**698875**
MC514			**698709**
MC515			**698746**
MC517			**715617**
MC5222			**698697**
MC5222			**698772**
MC525			**698696**
MC526			**698697**
MC530			**698246**
MC5302			**698246**
MC533			**715538**
MC537			**698744**
MC538			**698750**
MC539			**698687**
MC539			**698197**
MC540			**698687**

OE IAM	PROD	Valeo
MICRONAIR (.../...)		
MC541		**698695**
MC544		**698686**
MC547		**698708**
MC548		**698684**
MC549		**698682**
MC555		**698748**
MC557		**698749**
MC559		**698743**
MC560		**698739**
MC561		**698680**
MC564		**698715**
MC5682		**715568**
MC571		**698714**
MC574		**698701**
MC578		**698839**
MC578		**698535**
MC590		**698774**
MC591		**698688**
MC592		**698716**
MC5932		**698470**
MC5932		**698838**
MC594		**698778**
MC5952		**698747**
MC596		**698692**
MC597		**698745**
MC597		**698779**
MC598		**698751**
MC599		**698725**
MC6002		**698791**
MC606		**698683**
MC606		**698606**
MC607		**698710**
MC6082		**715621**
MC609		**698741**
MC6112		**698857**
MC612		**698862**
MC613		**698801**
MC614		**698693**
MC615		**698737**
MC616		**698738**
MC618		**715504**
MC619		**715505**
MC622		**698865**
MC623		**715611**
MC6242		**698890**
MC630		**698725**
MC639		**698877**
MC640		**698884**
MC641		**698768**
MC642		**698883**
MC643		**715590**
MC6442		**698793**
MC645		**715511**
MC646		**715512**
MC648		**698872**
MC649		**698776**
MC659		**698713**
MC661		**715507**
MC6662		**698864**
MC667		**715539**

OE IAM	PROD	Valeo
MICRONAIR (.../...)		
MC669		**715571**
MC670		**698802**
MC673		**715629**
MC675		**715508**
MC676		**715519**
MC681		**715628**
MC685		**715501**
MC688		**698541**
MC689		**698723**
MC694		**698710**
MC695		**715503**
MC700		**715533**
MC7012		**715555**
MC721		**698873**
MC7382		**715544**
MC7392		**715643**
MC747		**715509**
MC748		**715648**
MP002		**698170**
MP003		**698171**
MP004		**698704**
MP005		**698169**
MP009		**698165**
MP011		**698164**
MP012		**698235**
MP013		**698858**
MP014		**698874**
MP014		**698662**
MP015		**698167**
MP017		**698201**
MP017		**715617**
MP018		**698166**
MP019		**698704**
MP019		**698706**
MP020		**698840**
MP021		**698198**
MP0222		**715531**
MP023		**715577**
MP024		**698794**
MP025		**698247**
MP025		**698794**
MP026		**698169**
MP027		**698199**
MP028		**715534**
MP029		**698196**
MP0302		**698246**
MP031		**698163**
MP032		**698202**
MP033		**698255**
MP034		**698146**
MP036		**715645**
MP037		**698475**
MP038		**698489**
MP039		**698197**
MP040		**698689**
MP041		**698487**
MP042		**698860**
MP044		**698159**
MP044		**698160**
MP044		**698679**

OE IAM	PROD	Valeo
MICRONAIR (.../...)		
MP044		**698885**
MP045		**698860**
MP046		**698859**
MP047		**698663**
MP047		**698708**
MP049		**698164**
MP050		**698174**
MP051		**698173**
MP052		**698149**
MP053		**698172**
MP054		**698815**
MP055		**698203**
MP056		**698770**
MP057		**698488**
MP058		**698712**
MP059		**698700**
MP060		**698685**
MP061		**698680**
MP062		**698878**
MP063		**698734**
MP064		**698594**
MP065		**698279**
MP065		**698276**
MP066		**698735**
MP0662		**698735**
MP068		**698290**
MP0682		**698290**
MP069		**698770**
MP071		**698664**
MP072		**698723**
MP074		**698701**
MP076		**698168**
MP077		**698773**
MP078		**698535**
MP078		**698839**
MP078		**698867**
MP079		**715573**
MP080		**698196**
MP081		**698454**
MP082		**698707**
MP0832		**715593**
MP084		**698279**
MP084		**698276**
MP085		**698769**
MP086		**698771**
MP0873		**715530**
MP088		**698512**
MP089		**698512**
MP094		**698777**
MP097		**698779**
MP1002		**698790**
MP101		**698762**
MP104		**698681**
MP105		**715563**
MP105		**698796**
MP106		**698606**
MP106		**698683**
MP107		**698711**
MP109		**698702**
MP110		**698704**

OE IAM	PROD	Valeo
MICRONAIR (.../...)		
MP1112		**698856**
MP112		**698861**
MP113		**698800**
MP114		**698694**
MP115		**698737**
MP115		**715562**
MP116		**698738**
MP117		**698795**
MP121		**715542**
MP1242		**698891**
MP125		**698753**
MP125		**715549**
MP1262		**715548**
MP1262		**715545**
MP127		**715528**
MP1282		**715572**
MP129		**715565**
MP130		**698724**
MP139		**698876**
MP140		**715570**
MP141		**715581**
MP142		**698882**
MP145		**715510**
MP147		**698870**
MP148		**698871**
MP149		**698775**
MP157		**698731**
MP158		**698886**
MP160		**715594**
MP161		**715506**
MP162		**698893**
MP163		**698866**
MP164		**698865**
MP1662		**698863**
MP167		**698730**
MP170		**715603**
MP172		**698870**
MP173		**698657**
MP176		**715518**
MP179		**698753**
MP180		**698868**
MP181		**715627**
MP185		**715500**
MP187		**715516**
MP191		**698691**
MP192		**698690**
MP193		**715532**
MP193		**715552**
MP195		**715502**
MP196		**715521**
MP197		**698895**
MP198		**698886**
MP200		**715532**
MP2012		**715554**
MP202		**715540**
MP2032		**715525**
MP204		**698888**
MP207		**715515**
MP210		**715591**
MP211		**715527**

OE IAM	PROD	Valeo
MICRONAIR (.../...)		
MP213		**715517**
MP2151		**715523**
MP2181		**715522**
MP2182		**715522**
MP219		**715523**
MP220		**715524**
MP223		**715513**
MP224		**715651**
MP225		**715551**
MP2262		**715576**
MP2272		**698892**
MP228 2		**698894**
MP2282		**715574**
MP230		**715564**
MP232		**698196**
MP232		**698819**
MP233		**698879**
MP234		**698799**
MP236		**715546**
MP2372		**715561**
MP2372		**698869**
MP246		**715569**
MP263		**715595**
MP264		**715556**
MP269		**715596**
MP270		**715559**
MP271		**715579**
MP272		**715609**
MP273		**715550**
MP277		**715541**
MP321		**698690**
MP321		**715615**
MP677		**715602**
MP693		**715553**
MP771		**715580**
MINI		
64113422644		**715074**
64113422645		**715075**
64113422646		**715072**
64113422647		**715073**
64113422666		**812382**
64311496710		**698724**
64311496711		**698725**
64319127515		**715586**
64319127516		**715585**
64506917489		**509527**
64531490572		**817547**
64536918597		**817837**
64539141957		**509864**
MITSUBISHI		
7803A004		**715631**
7803A005		**715630**
7803A027		**715622**
7803A043		**715623**
7812A125		**515042**
7812A171		**814214**
CAB311B080		**817560**

OE IAM	PROD	Valeo
MITSUBISHI (.../...)		
MB657527		**508954**
MB657967		**814240**
MB813733		**818081**
MB899497		**508954**
MB918516		**508805**
MB958166		**817789**
MN123332		**817790**
MN134204		**814272**
MN151100		**814273**
MR116930		**818081**
MR117107		**508805**
MR218428		**814303**
MR227823		**715543**
MR262425		**715688**
MR262971		**699345**
MR283982		**814262**
MR315876		**715528**
MR360889		**715547**
MR398288		**715546**
MR460201		**715548**
MR460343		**817791**
MR500058		**715509**
MR500065		**515043**
MR513005		**814260**
MR513110		**817790**
MR958016		**715603**
MR958016P		**715603**
MR958017		**698802**
MR996738		**814262**
MZ311916		**715688**
MZ311917		**715548**
MZ311917		**715548**
MZ3600031		**715547**
MZ3600034		**715545**
MZ360034		**715509**
MZ600138		**715547**
MZ600163		**715543**
XR315172		**715545**
XR315172D		**715545**
XR315586		**715528**
XR315876		**715528**
XR315876D		**715528**
XR360889		**715547**
XR398288		**715546**
XR398288D		**715546**
XR500058D		**715509**
XZ311917		**715545**
XZ311917D		**715548**
NEOPLAN (NEOMAN)		
18255447		**716049**
18355447		**716049**
18357047		**716046**
20401236		**716049**
180740200		**716054**
6278350447		**716049**
81619100018		**716036**
81619100019		**716037**
88779100002		**716048**
88779100003		**716047**

OE IAM	PROD	Valeo
NEOPLAN (NEOMAN) (.../...)		
0018355547		**716056**
0018357047		**716046**
0018359247		**716064**
1101891A		**716046**
1101891B		**716046**
180412710		**716055**
81779100012		**716057**
NISSAN		
93857126		**814171**
93857127		**814172**
7711228912		**715538**
9,2132E+225		**508957**
2714061J15		**812108**
2714098B10		**812107**
27140AX700		**812250**
27143AX00		**812249**
27150AX015		**509599**
27150AX115		**509600**
271T200A00		**715722**
27226AX100		**698754**
27226AX105		**698755**
272747J125		**715561**
27274EA000		**715520**
272751N6P6		**715575**
2727700A26		**715721**
272771HE0E		**715706**
272771KA0A		**715721**
272771KA4A		**715721**
272773Y525		**698873**
272774M425		**698869**
27277CL025H		**715560**
27277CL025H		**715631**
27277EN025		**715559**
27277JD10A		**715732**
27277Z5000		**715560**
27280AX100		**817680**
27280AX300		**817683**
27280AX360		**817682**
2729800QAA		**715513**
2729800QAA		**715513**
2765000QAF		**817742**
27675AX010		**509601**
27675AX100		**509602**
27730AX010		**509597**
27730AX015		**509596**
27731AX700		**509598**
27732AX700		**509598**
278911FC0A		**715709**
278914A00C		**715694**
27891AX010		**698753**
27891BM400		**698734**
27891BM401		**698734**
27891BM401KE		**698734**
27891EL00A		**715708**
278932F900		**698707**
278936F600		**715549**
278939F500		**698707**
921009H21A		**814331**
92100AX800		**817836**

OE IAM	PROD	Valeo
NISSAN (.../...)		
92100AX80B		**817836**
92100BM400		**814328**
92100BN305		**817819**
92100BN307		**817819**
92100BN900		**817822**
92100JD200		**814008**
92100JD500		**814009**
92100JD700		**814010**
92100JG000		**814231**
92101G9800		**814252**
9211001G61		**814284**
921100L710		**814256**
921102F000		**817253**
921102M112		**817792**
921102M117		**817794**
921103S401		**814304**
9211050B00		**814300**
921106F600		**817732**
921109F515		**817603**
92110BM400		**817819**
92110BM405		**817819**
92110EW80A		**814221**
9211165Y00		**814275**
921304M400		**509709**
921312F000		**509947**
921312F600		**509947**
921312J971		**509948**
92131BM405		**509928**
92131BV000		**509927**
926005M301		**813115**
926009F510		**813834**
92600AX80A		**813113**
92600BR70A		**813262**
92600CA01A		**813111**
92600CJ700		**813343**
92600CJ70B		**813343**
92600EN22B		**813260**
92600ES60A		**813117**
92600EV00A		**813259**
92600JD74A		**813262**
92600JD75A		**813262**
92600JG30A		**813261**
92600VK110		**813110**
92600VK200		**813108**
92600VK510		**813109**
999M1D4005		**715520**
B72005M000		**698869**
B7277JN20A		**715703**
B727A79925		**698869**
B727A79925		**715631**
B729800QAA		**698255**
NISSENS		
70011		**811066**
70222		**812012**
71130		**883468**
71141		**812002**
71143		**812016**
71145		**812037**
71146		**812005**

OE IAM	PROD	Valeo
NISSENS (.../...)		
71147		**812006**
71148		**812023**
71149		**812116**
71150		**812036**
71151		**812044**
71170		**883520**
71429		**811397**
71438		**811075**
71439		**812081**
71442		**812145**
71755		**812058**
71761		**812129**
72634		**812149**
72644		**812110**
72653		**812146**
72655		**812126**
72656		**812117**
72657		**812118**
73252		**812157**
73254		**812161**
73255		**812161**
73256		**812162**
73257		**812162**
73330		**883739**
73340		**812032**
73349		**812154**
73352		**883971**
73356		**812014**
73359		**883790**
73361		**883790**
73362		**812048**
73363		**812139**
73364		**812015**
73365		**812157**
73368		**812113**
73373		**883790**
73374		**812169**
73375		**812170**
73940		**812034**
73961		**812031**
73962		**812030**
73965		**812013**
94013		**814278**
94015		**814274**
94024		**814284**
94025		**814279**
94026		**814282**
94053		**814280**
94076		**814276**
94088		**814317**
94100		**816803**
94100		**816803**
94120		**816850**
94142		**816756**
94143		**817061**
94164		**816910**
94182		**817675**
94183		**818081**
94191		**816964**
94193		**816977**

OE IAM	PROD	Valeo
NISSENS (.../...)		
94200		**817230**
94201		**816867**
94204		**816908**
94207		**816967**
94210		**816852**
94211		**816835**
94211		**816835**
94212		**816967**
94218		**816984**
94220		**816985**
94224		**817375**
94225		**816891**
94226		**817011**
94228		**816902**
94240		**816863**
94242		**816866**
94245		**816839**
94246		**816912**
94246		**816912**
94247		**816987**
94248		**816865**
94251		**816948**
94260		**817247**
94265		**817015**
94267		**817073**
94268		**816945**
94269		**816900**
94277		**816992**
94279		**817171**
94282		**817562**
94284		**816900**
94285		**817252**
94288		**814302**
94292		**814251**
94293		**814254**
94297		**814256**
94302		**817225**
94304		**814248**
94305		**817559**
94308		**817232**
94309		**814291**
94310		**817244**
94313		**817230**
94321		**817229**
94324		**817662**
94325		**817065**
94331		**814246**
94356		**814240**
94357		**814303**
94367		**814244**
94368		**814298**
94369		**818105**
94383		**814252**
94386		**818008**
94390		**817458**
94395		**814255**
94396		**814245**
94418		**814270**
94423		**814258**
94424		**814277**

OE IAM	PROD	Valeo
NISSENS (.../...)		
94428		**818085**
94458		**818070**
94459		**814296**
94498		**817732**
94503		**818988**
94507		**814259**
94509		**818101**
94510		**814305**
94513		**818103**
94514		**814247**
94515		**818107**
94516		**814309**
94521		**817822**
94540		**817802**
94541		**817803**
94578		**818984**
94589		**817819**
94608		**814261**
94624		**817798**
94687		**818084**
94705		**818086**
94709		**817781**
94713		**818985**
94720		**818087**
94730		**814208**
94730		**814209**
94732		**814242**
94733		**817780**
94734		**814241**
94735		**814267**
94736		**817783**
94741		**814218**
94748		**814273**
94759		**814304**
94766		**818088**
94769		**818032**
94771		**814243**
94772		**814225**
94788		**814159**
94791		**814310**
94794		**818200**
94795		**814207**
94807		**817846**
94808		**818025**
94817		**814288**
94831		**814002**
94841		**814268**
94847		**814311**
94848		**814312**
94853		**814293**
94857		**814368**
94864		**817790**
94882		**814014**
94885		**814314**
94894		**814287**
94899		**818192**
94905		**817024**
94916		**814199**
94921		**814263**
94933		**814266**

OE IAM	PROD	Valeo
NISSENS (.../...)		
94934		**814215**
94950		**814226**
94991		**814233**
940012		**814228**
940013		**814238**
940015		**814198**
940018		**814269**
940020		**814271**
940021		**814204**
940022		**814213**
940029		**814315**
940031		**818986**
940036		**814205**
940039		**814008**
940040		**814009**
940041		**814010**
940042		**814370**
940045		**814165**
940047		**814158**
940049		**814235**
940050		**814223**
940057		**814237**
940058		**814367**
940068		**814214**
940079		**814219**
940081		**814211**
940085		**814224**
940093		**814364**
940106		**814236**
940111		**814366**
940134		**814201**
940135		**814202**
940136		**814220**
940145		**814186**
940189		**814365**
940190		**814167**
940238		**814369**
940239		**814363**
NRF		
35040		**816973**
35046		**814292**
35056		**814288**
35057		**814296**
35086		**814291**
35102		**814280**
35137		**814240**
35145		**814302**
35149		**816803**
35188		**814251**
35189		**814279**
35193		**814246**
35197		**814277**
35210		**817792**
35217		**817024**
35220		**814248**
35231		**817794**
35262		**814254**
35263		**814289**
35267		**818081**

OE IAM	PROD	Valeo
NRF (.../...)		
35268		**814303**
35280		**814285**
35281		**818105**
35282		**814298**
35284		**814278**
35285		**814281**
35287		**814253**
35287		**814257**
35288		**814276**
35306		**818085**
35310		**814305**
35315		**817732**
35321		**814295**
35322		**814286**
35324		**814259**
35336		**817819**
35337		**817802**
35339		**818032**
35341		**818086**
35348		**817781**
35352		**818101**
35356		**818092**
35358		**814260**
35367		**817247**
35369		**814300**
35372		**817803**
35380		**814304**
35381		**814218**
35386		**818087**
35387		**818107**
35388		**818088**
35392		**814255**
35396		**814270**
35399		**814250**
35401		**814306**
35407		**814287**
35415		**814262**
35432		**817805**
35474		**814264**
35523		**814268**
35541		**814272**
35541		**814273**
35552		**814307**
35559		**814242**
35562		**814241**
35563		**817822**
35591		**818984**
35596		**814271**
35599		**817798**
35607		**817783**
35609		**814261**
35612		**814266**
35619		**817790**
35623		**818200**
35625		**818985**
35627		**818070**
35639		**817838**
35646		**814014**
35650		**818084**
35663		**814243**

OE IAM	PROD	Valeo
NRF (.../...)		
35663		**817780**
35740		**814159**
35744		**814258**
35754		**818025**
35757		**818986**
35762		**818988**
35772		**818034**
35774		**814368**
35813		**816835**
35833		**816912**
35844		**814366**
35868		**814314**
35869		**814312**
35872		**814315**
35891		**818987**
35906		**814367**
35910		**814364**
OPEL		
1286220		**699695**
1618010		**509565**
1618013		**508740**
1618016		**508739**
1618020		**812149**
1618043		**509687**
1618044		**812110**
1618051		**509563**
1618057		**508650**
1618081		**816902**
1618095		**509581**
1618098		**509582**
1618105		**715034**
1618108		**816902**
1618109		**816924**
1618110		**812118**
1618131		**509862**
1618134		**812284**
1618142		**812222**
1618146		**817518**
1618150		**509400**
1618192		**509409**
1618193		**509564**
1618206		**812285**
1618222		**812225**
1618242		**509691**
1618248		**812126**
1618288		**812363**
1618304		**509929**
1618308		**509949**
1718042		**698708**
1718044		**715632**
1718046		**698875**
1806002		**812146**
1806108		**812148**
1806110		**812150**
1806116		**812146**
1808066		**715037**
1808068		**715036**
1808093		**715035**
1808431		**509729**

OE IAM	PROD	Valeo
OPEL (.../...)		
1808524		**715658**
1808600		**698165**
1808602		**698165**
1808604		**698166**
1808605		**698167**
1808606		**715645**
1808607		**698202**
1808608		**715675**
1808609		**698712**
1808610		**698874**
1808610		**698662**
1808612		**698663**
1808613		**715569**
1808614		**698746**
1808617		**698710**
1808619		**698711**
1808624		**698710**
1843107		**812117**
1845021		**715036**
1845035		**715036**
1845046		**698393**
1845055		**698402**
1845057		**715036**
1845079		**698803**
1845080		**698804**
1845088		**698805**
1845089		**698806**
1845109		**698805**
1845110		**698806**
1845111		**698803**
1845202		**698564**
1845222		**698563**
1845404		**508970**
1845781		**509405**
1845785		**509731**
1845786		**509730**
1848000		**509591**
1848027		**508625**
1848032		**508914**
1848044		**509692**
1848045		**509693**
1848049		**509951**
1848301		**508660**
1850000		**817609**
1850051		**817670**
1850052		**818093**
1850057		**817505**
1850061		**817670**
1850073		**818047**
1850074		**817505**
1850076		**817647**
1850077		**817648**
1850078		**817506**
1850083		**817852**
1850084		**817853**
1850088		**817610**
1850089		**818118**
1850090		**817610**
1850091		**817609**
1850092		**817843**

OPEL (.../...)

OE	IAM	PROD	Valeo
1850093			**817844**
1850095			**817809**
1850096			**817839**
1850097			**817846**
1850098			**818114**
1850099			**817847**
1850111			**818168**
1850114			**814066**
1850119			**818193**
1850135			**814202**
1850136			**814201**
1850168			**818192**
1854008			**699071**
1854008			**699571**
1854021			**699073**
1854021			**699573**
1854031			**699071**
1854031			**699571**
1854054			**699070**
1854054			**699570**
1854057			**699073**
1854057			**699573**
1854058			**699909**
1854068			**699768**
1854076			**699903**
1854077			**699904**
1854094			**699072**
1854094			**699572**
1854096			**699301**
1854102			**699250**
1854102			**699750**
1854103			**699251**
1854103			**699751**
1854107			**699308**
1854107			**699808**
1854111			**699270**
1854111			**699770**
1854113			**699307**
1854113			**699807**
1854119			**699898**
1854120			**699769**
1854121			**699324**
1854121			**699824**
1854122			**699405**
1854122			**699905**
1854124			**699071**
1854124			**699571**
1854125			**699077**
1854125			**699577**
1854126			**699566**
1854128			**699745**
1854129			**699070**
1854129			**699570**
1854130			**699574**
1854131			**699695**
1854132			**699573**
1854133			**699768**
1854134			**699902**
1854137			**699767**
1854138			**699899**

OPEL (.../...)

OE	IAM	PROD	Valeo
1854139			**699735**
1854140			**699748**
1854141			**699072**
1854141			**699572**
1854142			**699102**
1854142			**699602**
1854144			**699102**
1854144			**699602**
1854145			**699077**
1854145			**699577**
1854147			**699306**
1854147			**699806**
1854148			**699896**
1854154			**813682**
1854155			**813685**
1854156			**813686**
1854157			**813687**
1854773			**509668**
4401424			**817689**
4403238			**817601**
4408429			**817577**
4408646			**817577**
4408840			**715513**
4409447			**715060**
4409448			**715059**
4409449			**515067**
4409452			**509900**
4409453			**812375**
4413391			**715060**
4413393			**509899**
4414387			**817644**
4414580			**817645**
4500908			**817065**
4500909			**814086**
4700165			**818093**
4705463			**698773**
4705465			**818093**
4707313			**814092**
4710210			**715644**
4803883			**715654**
6808601			**698711**
6808604			**698876**
6808605			**698877**
6808606			**698874**
6808607			**698875**
6808611			**698663**
6808622			**715552**
6808623			**715553**
6845612			**817530**
6845622			**817717**
6845623			**817718**
6850512			**509485**
6850515			**818498**
6854000			**699897**
6854001			**699324**
6854001			**699824**
6854002			**699894**
6854003			**699318**
6854003			**699818**
6854005			**699355**

OPEL (.../...)

OE	IAM	PROD	Valeo
6854005			**699855**
6854007			**699317**
6854007			**699817**
6854013			**699895**
6854019			**699355**
6854019			**699855**
6854021			**699748**
6854022			**699749**
6854023			**699752**
6854024			**699270**
6854024			**699770**
6854025			**699307**
6854025			**699807**
6854026			**699251**
6854026			**699751**
6854027			**699870**
6854028			**699308**
6854028			**699808**
6854029			**699769**
6854031			**699324**
6854031			**699824**
6854032			**699912**
6854035			**699317**
6854035			**699817**
6854036			**699355**
6854036			**699855**
6854037			**699318**
6854037			**699818**
6854040			**699894**
6854048			**699306**
6854048			**699806**
6854055			**699867**
6854056			**813601**
6854056			**813101**
6854057			**813601**
6854058			**813600**
6854059			**699862**
6854063			**699368**
6854066			**813604**
6854078			**813603**
6854082			**813682**
6854083			**813688**
6854085			**813685**
6854088			**699862**
6854089			**699868**
6854090			**699869**
6854096			**813604**
6854097			**813601**
6854098			**813602**
6854099			**813600**
6854100			**813605**
9117400			**509400**
9118918			**698393**
12793295			**817712**
12793296			**817711**
12804660			**818175**
13106020			**817844**
13106021			**817844**
13106817			**817853**
13114943			**817809**

OE IAM	PROD	Valeo
OPEL (.../...)		
13124752		**813602**
13139055		**813605**
13205197		**699869**
13217307		**813685**
13267648		**814201**
13267649		**814202**
13271191		**715659**
13271407		**698877**
24418362		**817647**
24418363		**817648**
24421642		**699306**
24421642		**699806**
24436990		**715224**
24443138		**699894**
52420930		**715659**
55703721		**813220**
90511659		**816902**
90511660		**816924**
90535115		**715226**
90559843		**699899**
90559848		**509400**
90564976		**699767**
91166018		**817577**
91168188		**817645**
91168643		**817644**
93160670		**699643**
93176127		**699900**
93176127		**699900**
93176853		**699749**
93176854		**699752**
93176856		**699807**
93176857		**699751**
93176859		**699808**
93176860		**699897**
93176862		**699824**
93176863		**699912**
93176865		**699896**
93176866		**699817**
93176871		**699894**
93176875		**699893**
93176876		**699898**
93176877		**699895**
93176884		**699870**
93176884		**699870**
93176916		**699806**
93178275		**699867**
93182437		**698166**
93185565		**699848**
93185567		**699865**
93185570		**699816**
93187225		**813626**
93187226		**699771**
93187228		**699868**
93187229		**699869**
93857126		**814171**
93857127		**814172**
517603160		**699868**
09207486		**698773**
1806124		**812077**
1808246		**715659**

OE IAM	PROD	Valeo
OPEL (.../...)		
1850086		**817798**
1850094		**814014**
4408840		**715513**
4806936		**814359**
91160128		**715513**
9586051K00		**715644**
9586051K00000		**715644**
R1580005		**699570**
R1580006		**699574**
R1580030		**699912**
PEUGEOT		
2484		**715646**
644145		**883629**
644159		**883995**
644168		**883966**
644169		**883978**
644171		**698195**
644174		**698194**
644178		**698032**
644179		**509288**
644191		**715589**
644193		**698192**
644194		**698193**
644195		**698046**
644196		**698044**
644758		**509221**
644764		**509226**
644793		**698235**
644848		**812023**
644851		**812399**
644854		**883674**
644855		**883737**
644858		**883976**
644859		**508555**
644862		**812337**
644872		**812016**
644874		**812115**
644875		**812114**
644877		**508555**
644877		**883976**
644878		**812005**
644880		**812006**
644889		**812037**
646164		**508690**
646191		**508694**
647904		**715570**
647989		**698713**
648708		**813223**
648714		**813317**
648722		**813317**
1854146		**699393**
1854146		**699893**
75515461		**883468**
85601415		**698713**
96189239		**817230**
1606222380		**515072**
9626925180		**817230**
9639078280		**699858**
9650545480		**818170**

OE IAM	PROD	Valeo
PEUGEOT (.../...)		
9650545980		**818171**
9650631480		**818170**
9650631680		**818171**
002435		**698749**
6436P3		**515134**
6436P9		**515139**
6441AA		**515038**
6441AA		**515038**
6441AF		**509918**
6441CZ		**715223**
6441CZ		**715223**
6441F3		**698038**
6441FB		**515071**
6441G3		**698193**
6441G4		**698192**
6441G5		**698194**
6441G6		**698195**
6441K8		**698529**
6441K9		**698447**
6441L0		**698448**
6441L1		**509885**
6441L2		**509355**
6441L3		**698045**
6441P3		**515123**
6441Q5		**698675**
6441Q6		**698676**
6441Q7		**509509**
6441Q8		**509510**
6441R5		**715227**
6441S0		**715053**
6441V0		**715221**
6441V0		**715221**
6441V1		**715068**
6441V1		**715068**
6441V2		**715069**
6441V2		**715069**
6441V5		**715063**
6441V8		**509913**
6441Z7		**715222**
6441Z7		**715222**
6441Z9		**515039**
6441Z9		**515039**
6444A3		**817093**
6444C6		**817519**
6445EQ		**509220**
6445G4		**509219**
6445K1		**508761**
6445P9		**508782**
6445PT		**812235**
6445R8		**508762**
6445RP		**509805**
6445S4		**508784**
6445SS		**509804**
6445ZA		**515037**
6447A5		**509222**
6447AZ		**698488**
6447CF		**509223**
6447EL		**509357**
6447F6		**509224**
6447GW		**698713**

OE IAM	PROD	Valeo
PEUGEOT (.../...)		
6447J0		**698858**
6447K6		**698815**
6447KK		**698664**
6447KL		**698714**
6447KR		**698657**
6447LY		**698738**
6447P2		**715530**
6447P3		**715530**
6447PE		**698749**
6447PG		**698748**
6447RG		**698884**
6447S5		**698203**
6447SY		**698858**
6447TA		**715558**
6447TT		**715515**
6447V1		**509225**
6447VX		**715557**
6447VY		**715556**
6447YA		**715636**
6447YJ		**715613**
6447YL		**715614**
6447Z5		**698146**
6447ZX		**715631**
6448A7		**812116**
6448C8		**812044**
6448F9		**812141**
6448G1		**883965**
6448G2		**883965**
6448G3		**812221**
6448G9		**812181**
6448H8		**812358**
6448J6		**812212**
6448K0		**812322**
6448K3		**812338**
6448K4		**812339**
6448K9		**812234**
6448P1		**812379**
6448P2		**812380**
6448P3		**812381**
6448P4		**812414**
6448P9		**812378**
6448Q1		**812415**
6448S4		**812416**
6448S4		**812416**
6448V6		**812417**
6448W9		**812424**
6448X0		**515078**
6450CF	EVA	**817095**
6450CG	EVA	**817338**
6450CH	EVA	**817520**
6450GV		**515082**
6450HA	EVA	**817467**
6450JS	EVA	**817467**
6450JT	EVA	**817339**
6450NV		**515079**
6450NW	EVA	**818981**
6450SN		**715067**
6450SN		**715067**
6453AQ		**699155**
6453AQ		**699655**

OE IAM	PROD	Valeo
PEUGEOT (.../...)		
6453AX		**699106**
6453AX		**699606**
6453CL		**699199**
6453CL		**699699**
6453CN		**699190**
6453CN		**699690**
6453EN		**699216**
6453EN		**699716**
6453FE		**699236**
6453FE		**699736**
6453FH		**817464**
6453FP		**817465**
6453FS		**699237**
6453FS		**699737**
6453FZ		**699518**
6453GA		**699236**
6453GA		**699736**
6453GC		**699526**
6453GE		**699520**
6453GF		**699155**
6453GF		**699655**
6453GG		**699524**
6453GH		**699527**
6453GJ		**699525**
6453GK		**699523**
6453GN		**699522**
6453GP		**699106**
6453GP		**699606**
6453GQ		**699028**
6453GQ		**699528**
6453JA		**817375**
6453JF		**699699**
6453JG		**699190**
6453JG		**699690**
6453JH		**699216**
6453JH		**699716**
6453JK		**699237**
6453JK		**699737**
6453JL		**813189**
6453JL		**813689**
6453JP		**813189**
6453JQ		**699772**
6453KW		**699358**
6453KW		**699858**
6453LA		**699358**
6453LA		**699858**
6453LF		**813189**
6453LF		**813689**
6453LH		**813189**
6453LH		**813689**
6453LJ		**813807**
6453LQ		**699272**
6453LQ		**699772**
6453LR		**699272**
6453LR		**699772**
6453N1		**699026**
6453N1		**699526**
6453NC		**813816**
6453NJ		**813804**
6453NK		**813158**

OE IAM	PROD	Valeo
PEUGEOT (.../...)		
6453NR		**813808**
6453P5		**699023**
6453P5		**699523**
6453P9		**699020**
6453P9		**699520**
6453PE		**699359**
6453PF		**699859**
6453PN		**699351**
6453PP		**699352**
6453PQ		**699349**
6453PR		**699353**
6453Q2		**699025**
6453Q5		**508834**
6453QE		**813824**
6453QF		**813824**
6453QG		**813317**
6453QH		**813809**
6453QJ		**813223**
6453QK		**813223**
6453QL		**813162**
6453QL		**813162**
6453QN		**813662**
6453QP		**813164**
6453QP		**813164**
6453QQ		**813664**
6453QW		**813810**
6453RA		**699351**
6453RE		**699352**
6453RG		**699349**
6453RJ		**699392**
6453RK		**699393**
6453RK		**699893**
6453RV		**813161**
6453RW		**813714**
6453SH		**699353**
6453SN		**813163**
6453SN		**813163**
6453T0		**699028**
6453T0		**699528**
6453TC		**813811**
6453TE		**699272**
6453TE		**699772**
6453TG		**813158**
6453TJ		**699236**
6453TJ		**699736**
6453V1		**508872**
6453V5		**816803**
6453VC		**813813**
6453VE		**813813**
6453VJ		**813715**
6453VK		**813715**
6453WL		**813723**
6453WQ		**813731**
6453WR		**813731**
6453WV		**813712**
6453WW		**813163**
6453WX		**813663**
6453WY		**813718**
6453WZ		**813718**
6453XC		**813726**

OE IAM	PROD	Valeo
PEUGEOT (.../...)		
6453XF		**813725**
6453XG		**813730**
6453XH		**813730**
6453XQ		**813818**
6453YC		**813727**
6453YK		**813820**
6453YN		**813821**
6453YP		**813819**
6453YW		**813322**
6453YX		**813822**
6453YY		**813728**
6453YZ		**813728**
6453Z0		**508840**
6455AA		**817524**
6455AC		**817526**
6455AE		**509795**
6455AH		**509791**
6455AJ		**509525**
6455AL		**814095**
6455AP		**817579**
6455AQ		**817668**
6455AS		**817667**
6455AT		**817508**
6455AV		**817230**
6455AW		**817229**
6455CG		**818018**
6455CH		**818000**
6455CH		**818001**
6455CJ		**818001**
6455CL		**509403**
6455CN		**814080**
6455CP		**817824**
6455CQ		**817667**
6455CV		**817508**
6455CX		**818170**
6455CY		**818171**
6455EA		**817740**
6455EC		**814081**
6455EE		**818014**
6455EF		**818013**
6455EK		**818015**
6455EL		**814095**
6455EP		**814069**
6455EQ		**814085**
6455ES		**814366**
6455ET		**814095**
6455EY		**817740**
6455FW		**814065**
6455FX		**817824**
6455GH		**818170**
6455GK		**818171**
6455GY		**814090**
6455GZ		**814173**
6455H5		**508737**
6455HF		**818015**
6455HS		**814366**
6455HV		**814363**
6455JA		**814365**
6455L1		**509483**
6455P6		**816835**

OE IAM	PROD	Valeo
PEUGEOT (.../...)		
6455P8		**508738**
6455Q7		**508741**
6455Q9		**817230**
6455R0		**817230**
6455R3		**816835**
6455R3		**816835**
6455R9		**508603**
6455S0		**508737**
6455T2		**509484**
6455T3		**818191**
6455V5		**816977**
6455V6		**508874**
6455V8		**816984**
6455V9		**817230**
6455W2		**817229**
6455W7		**817283**
6455W8		**509403**
6455X5		**509865**
6455X7		**509402**
6455X8		**508873**
6455X9		**817283**
6455Y0		**817283**
6455Y1		**817375**
6455Y2		**817042**
6455Y3		**816852**
6455Y6		**816850**
6455Z7		**817655**
6457QA		**818429**
6457T9		**818479**
6457TW		**818440**
6457WT		**818475**
6457WZ		**818444**
6457YL		**818409**
6457ZX		**818443**
6461A1		**508697**
6461A3		**508696**
6461F7		**508695**
6461G5		**509409**
6461G7		**508690**
6461G8		**508801**
6461H3		**508649**
6461H5		**509851**
6461H7		**509854**
6461J0		**509851**
6461J2		**508694**
6461K3		**509968**
6461K3		**509968**
6461K6		**509959**
6461L9		**515055**
6461L9		**515055**
6461P7		**515140**
6464C8		**508555**
6479H8		**515124**
6479K9		**715673**
PORSCHE		
94412600800		**813653**
94457314301		**508805**
95557221910		**698768**
95857221900		**715704**

OE IAM	PROD	Valeo
PORSCHE (.../...)		
97057362300		**715693**
99657121901		**698203**
99657121902		**698748**
99657121903		**698748**
99657221901		**698203**
99657311102		**814167**
99657311103		**814167**
171819031D		**812034**
95557311101		**817838**
99757121900		**698748**
PURFLUX		
AH101		**698146**
AH102		**698203**
AH103		**698168**
AH103		**698779**
AH104		**698159**
AH104		**698679**
AH104		**698885**
AH105		**698166**
AH106		**698165**
AH107		**698197**
AH108		**698198**
AH109		**698199**
AH111		**698200**
AH114		**698235**
AH115		**698815**
AH116		**698149**
AH117		**698173**
AH119		**698164**
AH120		**698171**
AH121		**698174**
AH122		**698201**
AH123		**698472**
AH124		**698202**
AH125		**698163**
AH126		**698475**
AH127		**698196**
AH128		**698167**
AH129		**698247**
AH132		**698176**
AH133		**698177**
AH135		**715653**
AH137		**715531**
AH138		**698169**
AH138		**698697**
AH140		**698488**
AH141		**715633**
AH142		**698878**
AH143		**698255**
AH144		**698279**
AH147		**715683**
AH149		**698770**
AH150		**698276**
AH151		**715572**
AH154		**698535**
AH157		**698712**
AH158		**698840**
AH159		**715577**
AH160		**698681**

OE IAM	PROD	Valeo
PURFLUX (.../...)		
AH160		**715619**
AH163		**698290**
AH165		**698869**
AH166		**698680**
AH167		**698487**
AH169		**698512**
AH170		**698662**
AH170		**698874**
AH171		**698663**
AH171		**698708**
AH173		**698771**
AH174		**698691**
AH175		**698773**
AH179		**698664**
AH180		**698731**
AH182		**698794**
AH184		**698606**
AH185		**698594**
AH186		**715513**
AH187		**698489**
AH189		**698795**
AH191		**698685**
AH193		**698657**
AH194		**698700**
AH194		**698743**
AH195		**698694**
AH198		**698711**
AH199		**698730**
AH201		**698867**
AH202		**698800**
AH203		**715562**
AH204		**698734**
AH205		**698738**
AH206		**698876**
AH207		**698753**
AH209		**715581**
AH210		**698796**
AH212		**698882**
AH212		**715627**
AH214		**715573**
AH220		**698735**
AH221		**698868**
AH222		**698817**
AH223		**715515**
AH224		**698762**
AH225		**698707**
AH226		**698860**
AH227		**698879**
AH228		**715514**
AH229		**698799**
AH230		**698888**
AH231		**698858**
AH233		**698866**
AH234		**698736**
AH238		**715510**
AH244		**715552**
AH245		**715556**
AH248		**715521**
AH249		**698886**
AH250		**715532**

OE IAM	PROD	Valeo
PURFLUX (.../...)		
AH251		**698892**
AH255		**715689**
AH256		**715550**
AH257		**715517**
AH259		**715620**
AH260		**715541**
AH261		**715554**
AH263		**715636**
AH265		**715616**
AH266		**715540**
AH267		**715597**
AH270		**715638**
AH273		**715649**
AH280		**698871**
AH282		**715660**
AH289		**698769**
AH297		**698777**
AH301		**715524**
AHC101		**715677**
AHC102		**698748**
AHC103		**698745**
AHC107		**698687**
AHC112		**715530**
AHC113		**698732**
AHC119		**715578**
AHC120		**698171**
AHC122		**715617**
AHC124		**715675**
AHC126		**698744**
AHC128		**698746**
AHC129		**698696**
AHC130		**698170**
AHC134		**698246**
AHC136		**698679**
AHC139		**698684**
AHC140		**698749**
AHC142		**698878**
AHC143		**715538**
AHC145		**698791**
AHC147		**698682**
AHC149		**698770**
AHC153		**698454**
AHC154		**698839**
AHC156		**698688**
AHC166		**715612**
AHC167		**698695**
AHC169		**698512**
AHC177		**698747**
AHC178		**698716**
AHC179		**698714**
AHC181		**698713**
AHC183		**698540**
AHC183		**698541**
AHC184		**698683**
AHC185		**698715**
AHC187		**698750**
AHC188		**698774**
AHC190		**698692**
AHC191		**698739**
AHC192		**698725**

OE IAM	PROD	Valeo
PURFLUX (.../...)		
AHC195		**698693**
AHC198		**698710**
AHC199		**715539**
AHC200		**698751**
AHC202		**698801**
AHC203		**698737**
AHC205		**715558**
AHC208		**698870**
AHC211		**698741**
AHC212		**698883**
AHC213		**698884**
AHC215		**698740**
AHC219		**698864**
AHC237		**715507**
AHC238		**715511**
AHC239		**698246**
AHC245		**715557**
AHC246		**715503**
AHC247		**715501**
AHC250		**715533**
AHC258		**715613**
AHC261		**715555**
AHC264		**715607**
AHC268		**715602**
AHC269		**715580**
AHC278		**698802**
QUINTON HAZELL		
QAP200		**698165**
QAP201		**698166**
QAP204		**698198**
QAP205		**698171**
QAP206		**698199**
QAP207		**698168**
QAP208		**698174**
QAP212		**698146**
QAP213		**698159**
QAP213		**698679**
QAP213		**698885**
QAP214		**698164**
QAP215		**698770**
QAP216		**698170**
QAP217		**698197**
QAP219		**698202**
QAP220		**698201**
QAP221		**698707**
QAP224		**698149**
QAP225		**698167**
QAP227		**698173**
QAP228		**698203**
QAP232		**698247**
QAP234		**698196**
QAP234		**698819**
QAP235		**715514**
QAP237		**698858**
QAP242		**698235**
QAP244		**715530**
QAP247		**698869**
QAP249		**698174**
QAP253		**698840**

QUINTON HAZELL (.../...)

OE IAM	PROD	Valeo
QAP254		**698172**
QAP259		**698177**
QAP260		**698691**
QAP261		**698663**
QAP263		**698279**
QAP264		**698276**
QAP265		**698196**
QAP266		**698662**
QAP266		**698874**
QAP267		**698487**
QAP268		**698860**
QAP269		**698859**
QAP270		**715633**
QAP271		**698475**
QAP273		**698488**
QAP275		**698790**
QAP276		**698535**
QAP277		**698489**
QAP278		**698690**
QAP279		**715512**
QAP281		**715531**
QAP282		**715575**
QAP284		**698290**
QAP285		**698255**
QAP286		**715561**
QAP287		**698838**
QAP298		**698469**
QAP309		**698454**
QAP311		**698700**
QAP313		**698734**
QAP314		**698773**
QAP315		**715646**
QAP316		**698878**
QAP317		**698512**
QAP318		**698681**
QAP319		**698879**
QAP320		**698680**
QAP321		**698771**
QAP321		**715512**
QAP322		**698711**
QAP324		**698685**
QAP325		**715670**
QAP327		**698712**
QAP328		**698606**
QAP329		**698594**
QAP330		**698779**
QAP333		**698769**
QAP334		**698775**
QAP336		**698815**
QAP337		**698867**
QAP338		**698657**
QAP340		**698891**
QAP343		**698196**
QAP343		**715573**
QAP344		**698664**
QAP345		**715517**
QAP346		**698888**
QAP347		**698796**
QAP351		**715548**
QAP351		**715549**

QUINTON HAZELL (.../...)

OE IAM	PROD	Valeo
QAP352		**698794**
QAP353		**715594**
QAP354		**698735**
QAP355		**698795**
QAP356		**698856**
QAP357		**698702**
QAP360		**715516**
QAP361		**715527**
QAP362		**698738**
QAP363		**698762**
QAP366		**698694**
QAP367		**698800**
QAP371		**698876**
QAP372		**698870**
QAP373		**698753**
QAP374		**715562**
QAP375		**698736**
QAP376		**698730**
QAP380		**715626**
QAP381		**698886**
QAP382		**715551**
QAP383		**715522**
QAP385		**715523**
QAP387		**698866**
QAP388		**698724**
QAP389		**698540**
QAP390		**698882**
QAP390		**715510**
QAP391		**715534**
QAP392		**698871**
QAP393		**715500**
QAP394		**698868**
QAP395		**698893**
QAP396		**698863**
QAP397		**698892**
QAP398		**715535**
QAP399		**715587**
QAP400		**715524**
QAP401		**715526**
QAP402		**715521**
QAP403		**715506**
QAP404		**715627**
QAP405		**715563**
QAP405		**715619**
QAP406		**715570**
QAP408		**698895**
QAP409		**715502**
QAP410		**715520**
QAP412		**715529**
QAP414		**698861**
QAP417		**715518**
QAP420		**715552**
QAP420		**715553**
QAP423		**715620**
QAP424		**715588**
QAP425		**715595**
QAP427		**715592**
QAP428		**715601**
QAP429		**715540**
QAP430		**715636**

QUINTON HAZELL (.../...)

OE IAM	PROD	Valeo
QAP432		**715585**
QAP432		**715586**
QAP433		**715554**
QAP436		**715583**
QAP437		**715642**
QAP438		**715616**
QAP439		**715644**
QAP500		**715632**
QAP502		**698682**
QAP513		**698686**
QAP525		**698746**
QAP528		**698748**
QAP532		**698696**
QAP533		**698697**
QAP538		**698246**
QAP545		**698716**
QAP552		**698688**
QAP556		**698684**
QAP561		**698708**
QAP566		**698709**
QAP566		**698875**
QAP567		**698695**
QAP571		**698744**
QAP573		**698749**
QAP575		**698791**
QAP576		**698839**
QAP577		**698750**
QAP580		**698774**
QAP584		**715568**
QAP585		**715538**
QAP587		**698470**
QAP602		**698703**
QAP611		**698742**
QAP611		**698743**
QAP612		**698778**
QAP619		**698880**
QAP622		**698710**
QAP624		**698739**
QAP626		**698747**
QAP628		**698683**
QAP629		**698715**
QAP630		**698745**
QAP632		**698873**
QAP634		**698776**
QAP638		**715629**
QAP639		**698865**
QAP640		**698890**
QAP642		**698731**
QAP644		**698714**
QAP649		**698692**
QAP650		**715509**
QAP656		**698857**
QAP657		**698740**
QAP657		**698772**
QAP659		**698751**
QAP662		**715558**
QAP666		**698693**
QAP667		**698801**
QAP668		**715560**
QAP670		**698768**

OE IAM	PROD	Valeo
QUINTON HAZELL (.../...)		
QAP671		**698877**
QAP674		**698737**
QAP675		**715610**
QAP677		**715508**
QAP682		**715680**
QAP686		**698713**
QAP688		**698725**
QAP689		**698541**
QAP690		**698883**
QAP690		**715511**
QAP692		**698872**
QAP693		**715501**
QAP696		**698864**
QAP703		**715507**
QAP706		**698884**
QAP707		**698802**
QAP709		**715503**
QAP714		**698862**
QAP731		**715613**
QAP731		**715614**
QAP733		**715555**
QAP741		**715635**
WP6802		**715645**
WP6809		**715578**
WP6812		**698160**
WP6814		**715677**
WP6819		**715675**
WP6820		**715617**
WP6864		**715683**
WP6878		**698704**
WP6890		**698163**
WP6898		**715653**
WP6930		**698176**
WP6934		**698169**
WP6978		**715577**
WP9091		**715676**
WP9092		**698689**
WP9115		**715612**
WP9166		**715581**
WP9173		**698792**
WP9175		**715539**
WP9181		**698723**
WP9190		**698799**
WP9202		**698175**
WP9204		**715572**
WP9240		**715528**
WP9244		**715525**
WP9246		**715513**
WP9257		**715556**
WP9257		**715557**
WP9260		**715532**
WP9263		**715544**
WP9265		**715643**
WP9276		**715515**
WP9280		**715615**
WP9288		**715688**
WP9294		**715631**
WP9298		**715541**
WP9308		**715597**
WP9313		**715546**

OE IAM	PROD	Valeo
QUINTON HAZELL (.../...)		
WP9332		**715684**
WP9336		**715649**
WP9339		**715584**
WP9343		**715519**
WP9356		**715658**
RENAULT		
4797149		**508612**
52419600		**715607**
52485325		**698594**
83501846		**698053**
5010382644		**817379**
6000073500		**699239**
6000073500		**699739**
6001550660		**814051**
6025006715		**508619**
6025107659		**508619**
6025107661		**508657**
6025107881		**813630**
6025170679		**812139**
6025306732		**818030**
6025310510		**818028**
6025313325		**818029**
6025313367		**818027**
6025370414		**812287**
6025370415		**812288**
6025370624		**698290**
6025372486		**715568**
7700100417		**699107**
7700100417		**699607**
7700103536		**699197**
7700103536		**699697**
7700105765		**699143**
7700105765		**699643**
7700106069		**699059**
7700106069		**699559**
7700106441		**699221**
7700106441		**699721**
7700106950		**699059**
7700106950		**699559**
7700111036		**699092**
7700111036		**699592**
7700111235		**699191**
7700111235		**699691**
7700111289		**699088**
7700111289		**699588**
7700111298		**699079**
7700111298		**699579**
7700112299		**699057**
7700112299		**699557**
7700115830		**699202**
7700272365		**508620**
7700272419		**508662**
7700272433		**508610**
7700272486		**508616**
7700272487		**508615**
7700272488		**816863**
7700272497		**699039**
7700272987		**699094**
7700272987		**699594**

OE IAM	PROD	Valeo
RENAULT (.../...)		
7700273320		**699157**
7700273320		**699657**
7700273801		**699218**
7700273801		**699718**
7700312901		**817577**
7700414103		**817171**
7700418301		**816912**
7700423936		**508624**
7700424093		**698276**
7700424098		**698255**
7700425843		**817197**
7700428083		**817428**
7700428315		**817799**
7700428820		**698279**
7700428859		**818422**
7700432391		**816912**
7700432391		**816912**
7700432392		**817197**
7700433077		**817799**
7700434383		**817509**
7700436061		**509792**
7700436062		**817602**
7700823668		**508613**
7700827348		**508661**
7700832447		**508663**
7700834816		**698173**
7700836314		**509404**
7700837219		**508665**
7700840853		**816866**
7700841978		**508612**
7700845219		**698176**
7700845222		**698177**
7700845811		**698149**
7700846236		**698175**
7700852705		**699502**
7700856259		**699501**
7700857170		**699501**
7700859676		**699003**
7700865035		**699659**
7700865327		**699660**
7700865583		**699534**
7700866491		**699036**
7700866491		**699536**
7700866530		**699093**
7700866530		**699593**
7700866828		**699045**
7700866828		**699545**
7700868578		**699589**
7700871663		**699502**
7700871663		**699543**
7700871664		**699534**
7700875357		**699144**
7700875357		**699644**
7701026569		**812045**
7701027040		**883790**
7701027051		**698052**
7701027053		**698053**
7701027078		**883790**
7701032225		**812015**
7701032297		**883971**

OE IAM	PROD	Valeo
RENAULT (.../...)		
7701033462		**509230**
7701033535		**508588**
7701033536		**698144**
7701033537		**508694**
7701034291		**812045**
7701034351		**509231**
7701034490		**509285**
7701034539		**812032**
7701034874		**509281**
7701034990		**698057**
7701035891		**812014**
7701035892		**698059**
7701035894		**509280**
7701035904		**698072**
7701035913		**509224**
7701036909		**812154**
7701038227		**816867**
7701038394		**508623**
7701038539		**698072**
7701038542		**812113**
7701039302		**508787**
7701039476		**509284**
7701039481		**812048**
7701039482		**698072**
7701039601		**508704**
7701039603		**508792**
7701039604		**508761**
7701039742		**816865**
7701039744		**508609**
7701040493		**508698**
7701040540		**698144**
7701040542		**509282**
7701040543		**698149**
7701040562		**509283**
7701040563		**508644**
7701040976		**508789**
7701041339		**508790**
7701041340		**508648**
7701041412		**508622**
7701041413		**508638**
7701041787		**508646**
7701042499		**698255**
7701042499		**715633**
7701042517		**812112**
7701043663		**515085**
7701044126		**698251**
7701044164		**508651**
7701044406		**817065**
7701044611		**508705**
7701044790		**812169**
7701044804		**698253**
7701044813		**698255**
7701044814		**508791**
7701044818		**698328**
7701045346		**818008**
7701045347		**509340**
7701045552		**812169**
7701045870		**509885**
7701046055		**509227**
7701046056		**509228**

OE IAM	PROD	Valeo
RENAULT (.../...)		
7701046058		**698277**
7701046080		**508866**
7701046085		**509684**
7701046943		**515084**
7701046946		**698330**
7701047513		**698512**
7701048386		**509357**
7701048387		**698513**
7701048390		**509355**
7701048748		**698594**
7701048749		**698715**
7701049665		**817601**
7701050310		**698059**
7701050310		**715059**
7701050319		**715513**
7701050325		**509900**
7701050738		**515069**
7701050894		**715232**
7701050899		**715231**
7701050900		**509886**
7701051270		**715233**
7701051271		**715229**
7701051272		**509921**
7701052120		**817742**
7701055109		**698730**
7701055110		**698736**
7701056389		**715562**
7701056390		**698737**
7701056598		**698816**
7701056964		**698728**
7701056965		**698729**
7701057122		**817689**
7701059997		**698753**
7701060000		**509776**
7701060003		**812309**
7701060014		**715071**
7701060015		**715071**
7701060024		**509777**
7701060025		**509775**
7701062226		**715056**
7701062227		**698753**
7701064235		**715539**
7701064237		**715610**
7701066110		**814003**
7701067950		**715066**
7701067951		**509914**
7701067982		**715234**
7701204680		**812157**
7701204731		**816839**
7701204732		**508631**
7701204841		**817061**
7701204955		**816756**
7701205083		**508792**
7701205214		**816987**
7701205278		**698149**
7701205279		**698176**
7701205280		**698175**
7701205281		**698177**
7701205443		**698281**
7701205450		**812161**

OE IAM	PROD	Valeo
RENAULT (.../...)		
7701205451		**812162**
7701205479		**698330**
7701205485		**508631**
7701205538		**812223**
7701205584		**812170**
7701205682		**698283**
7701205948		**817061**
7701206105		**698328**
7701206250		**698364**
7701206251		**698329**
7701206252		**698330**
7701206357		**508833**
7701207712		**812247**
7701207715		**812235**
7701207717		**509536**
7701207718		**509355**
7701207720		**509603**
7701207721		**509604**
7701207874		**817709**
7701207876		**509638**
7701208225		**715060**
7701208226		**509899**
7701208323		**812247**
7701208381		**812308**
7701208762		**509958**
7701208766		**812373**
7701209802		**715225**
7701209803		**515081**
7701209837		**715649**
7701209850		**509961**
7701349807		**883973**
7701349808		**509279**
7701409324		**698878**
7701473279		**812375**
7701499806		**699506**
7701499807		**699505**
7701499811		**699538**
7701499815		**699542**
7701499816		**699544**
7701499818		**699595**
7701499819		**699539**
7701499820		**699094**
7701499820		**699594**
7701499827		**699504**
7701499831		**699502**
7701499834		**699534**
7701499835		**699540**
7701499836		**699503**
7701499837		**699537**
7701499838		**699618**
7701499839		**699079**
7701499839		**699579**
7701499839		**699580**
7701499840		**699501**
7701499841		**699659**
7701499842		**699660**
7701499843		**699593**
7701499844		**699045**
7701499844		**699545**
7701499845		**699557**

OE	IAM	PROD	Valeo
RENAULT (.../...)			
7701499845			**699587**
7701499846			**699589**
7701499847			**699502**
7701499847			**699543**
7701499848			**699005**
7701499850			**699107**
7701499850			**699607**
7701499850			**699607**
7701499851			**699559**
7701499852			**699157**
7701499852			**699657**
7701499852			**699657**
7701499856			**699533**
7701499857			**699596**
7701499858			**699144**
7701499858			**699644**
7701499859			**699197**
7701499859			**699697**
7701499860			**699143**
7701499860			**699643**
7701499861			**699585**
7701499861			**699592**
7701499862			**699586**
7701499862			**699588**
7701499864			**699721**
7701499885			**699702**
7701499969			**699718**
7701499970			**699691**
7702163822			**509229**
7704000112			**883739**
7711134208			**699239**
7711134208			**699739**
7711134454			**699240**
7711134454			**699740**
7711134455			**699741**
7711134503			**699606**
7711134670			**699734**
7711135104			**699860**
7711135105			**699246**
7711135105			**699746**
7711135808			**699766**
7711135846			**699861**
7711135948			**813629**
7711228912			**715538**
7711368037			**813705**
7711368064			**699915**
7711368186			**813633**
7711368188			**813634**
7711368189			**813635**
7711368407			**813625**
7711368564			**699914**
7711368902			**813632**
7711497298			**813665**
7711497298			**813665**
7711497516			**813826**
7711497517			**813825**
7711497531			**813827**
8200008763			**817568**
8200017628			**509590**
8200019382			**817645**

OE	IAM	PROD	Valeo
RENAULT (.../...)			
8200021822			**699240**
8200021822			**699740**
8200024397			**699241**
8200024397			**699741**
8200025640			**509727**
8200033733			**817731**
8200037058			**699234**
8200037058			**699734**
8200050141			**699246**
8200050141			**699746**
8200052125			**509719**
8200071647			**509701**
8200073912			**817644**
8200094271			**509718**
8200106950			**817428**
8200112833			**509500**
8200115543			**817608**
8200119657			**509954**
8200137650			**817687**
8200152728			**817568**
8200182361			**817701**
8200200671			**699861**
8200201422			**813129**
8200201422			**813629**
8200211563			**733075**
8200220924			**699915**
8200221131			**817662**
8200221132			**817661**
8200241088			**817827**
8200245598			**817646**
8200247360			**509793**
8200296433			**509718**
8200315744			**699218**
8200315744			**699718**
8200316164			**699246**
8200316164			**699746**
8200325004			**818002**
8200332851			**814007**
8200332852			**814006**
8200343375			**813705**
8200352288			**509909**
8200357173			**813132**
8200357173			**813632**
8200365787			**813131**
8200365787			**813631**
8200436108			**813635**
8200443897			**818165**
8200448252			**814061**
8200454172			**813125**
8200454172			**813144**
8200457418			**813222**
8200465490			**814172**
8200468911			**818166**
8200561276			**813145**
8200577732			**813125**
8200600122			**813131**
8200600122			**813631**
8200628441			**813129**
8200628441			**813629**
8200651251			**813165**

OE	IAM	PROD	Valeo
RENAULT (.../...)			
8200678499			**813222**
8200678507			**813634**
8200678509			**813633**
8200688392			**818166**
8200688393			**818165**
8200708128			**817662**
8200708130			**817661**
8200720417			**813147**
8200720780			**813149**
8200756604			**813632**
8200757789			**817428**
8200774211			**814171**
8200778910			**733075**
8200819568			**813132**
8200819568			**813632**
8200835879			**813264**
8200909753			**813149**
271159831R			**812413**
272100042R			**715065**
272770001R			**715607**
272770567R			**715725**
272771128R			**715672**
272772100R			**715721**
272774653R			**715734**
272774658R			**715724**
272774936R			**715722**
272775374R			**698753**
272778970R			**715647**
277323296R			**515060**
277424777R			**515061**
27891JY15A			**715667**
27891JY15A			**715724**
5001833351			**817108**
5010315372			**818172**
77 00 861 779			**699618**
7701046061			**515089**
7701046957			**515087**
7701048356			**515137**
7701048753			**715243**
7701050890			**515086**
7701050894			**715232**
7701050899			**715231**
7701051259			**515070**
7701051270			**715233**
7701051271			**715229**
7701206104			**515136**
7701209524			**812423**
7701473281			**515138**
7711497516			**813826**
7711497517			**813825**
7711497531			**813827**
8200454172			**813644**
8200470242			**813732**
8200561276			**813645**
8200577732			**813625**
8200600110			**813732**
8200705022			**813625**
8200720417			**813647**
8200848916			**813265**
8200869742			**813263**

OE	IAM	PROD	Valeo
RENAULT (.../...)			
8200890987			**813645**
8200898810			**813647**
8200898810			**813647**
8200909753			**813649**
8200940837			**813732**
921001367R			**814188**
921005824R			**814179**
921100001R			**814094**
926000217R			**813382**
926001243R			**813384**
926002352R			**813383**
926007877R			**813339**
926009582R			**813381**
RENAULT			
7701050319			**715513**
RENAULT - IRISBUS			
5010104657			**812355**
RENAULT TRUCKS			
5000294090			**812130**
5000294090			**812349**
5000739631			**812026**
5000752789			**816962**
5000814065			**812035**
5001829118			**812130**
5001833354			**716001**
5001833355			**812128**
5001833357			**698853**
5001844054			**716000**
5001867491			**716009**
5010104235			**812035**
5010104657			**812355**
5010144817			**815968**
5010230214			**816980**
5010315281			**816980**
5010320194			**815967**
5010382644			**817379**
5010417679			**813023**
5010483009			**813007**
5010483099			**813025**
5010619734			**816980**
7701038542			**812113**
7701045346			**818008**
7701201683			**812132**
8200008763			**817568**
8200152728			**817568**
5001829129			**716000**
ROLLS ROYCE			
64116921019			**698857**
ROVER			
37H7216			**881769**
BAU5230			**812039**
JEF10002			**812069**
JEF10005			**812028**

OE	IAM	PROD	Valeo
ROVER (.../...)			
JEF100060			**812070**
JEM10002			**812071**
JGC100150			**698830**
JGH10002			**509650**
JKR000030			**698879**
JKR000040			**698880**
JKR100020			**698196**
JKR100183			**698879**
JKR100193			**698880**
JKR100220			**698819**
JPB000040A			**813832**
JPB000150			**699314**
JPB100680			**699220**
JPB100680			**699720**
JPB100760			**699109**
JPB100760			**699609**
JPB100770			**699220**
JPB100770			**699720**
JPB101230			**699315**
JPB101240			**699314**
JPB101460A			**699347**
JQD100230			**508648**
JQD100270			**508652**
JRB100190			**818031**
JRB100310			**816921**
JRD100050			**508805**
JRJ100260			**508627**
JRJ100270			**508626**
JRJ100310			**508629**
JRJ100660			**509498**
JRJ100670			**509497**
JRJ100710			**509721**
JRJ100720			**509720**
JTB100220			**508659**
JUE106010			**818500**
JUE109590			**818503**
JUE109910			**818501**
SAAB			
4070801			**699597**
4319158			**508637**
4319984			**508829**
4319992			**699608**
4366944			**715036**
4382396			**814317**
4383170			**508825**
4383527			**508921**
4541215			**818099**
4541546			**698723**
4634937			**817507**
4635199			**508642**
4635892			**699316**
4758272			**509732**
4758686			**509495**
4758819			**715036**
4759072			**509567**
4868949			**509930**
5047113			**715514**
5048350			**814000**
5048368			**699346**

OE	IAM	PROD	Valeo
SAAB (.../...)			
5048491			**814000**
5048590			**508648**
5049085			**715061**
5335948			**698723**
5335955			**698723**
6854036			**699355**
6854036			**699855**
9179904			**698711**
9179905			**698710**
9180020			**509894**
9180208			**509896**
9180222			**698805**
9228317			**698806**
9480740			**508919**
9480914			**508635**
9625674			**698199**
9627159			**508655**
12756725			**813124**
12758381			**699348**
12758381			**699848**
12758381			**813686**
12758727			**698723**
12773283			**814000**
12792669			**813686**
12793295			**817711**
12793295			**817712**
12793296			**817711**
12799558			**698807**
12799559			**698808**
12804660			**818175**
13140505			**699355**
13140505			**699855**
24411280			**699348**
24411280			**699848**
24418362			**817647**
24418368			**509692**
24418371			**509693**
93171801			**812253**
93172073			**817717**
93172074			**817718**
93172129			**698711**
93185557			**813677**
13192013			**515126**
5172580			**515125**
72880FE001			**715551**
G3210FE000			**715680**
SATURN			
615974			**715654**
SCANIA			
1137496			**815969**
1337496			**815969**
1412263			**699366**
1412264			**813016**
1446258			**818988**
1446258			**818988**
81619066012			**813016**
1380374			**818992**

OE	IAM	PROD	Valeo
SCANIA (BUS)			
1100372A			**716049**
1100372B			**716049**
SCANIA TRUCKS			
1326180		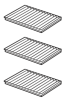	**716040**
1420197			**716039**
1770813			**716052**
SCION			
8713952010		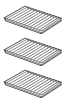	**698681**
8974000820			**715650**
885685201083			**698681**
SEAT			
191091700			**715653**
191819638			**715653**
191820679			**508690**
357820021			**698157**
893820021			**698030**
191819031F			**812030**
191820191A			**508922**
1H0091800			**698686**
1H0819638			**698160**
1H0819638A			**698160**
1H0819644			**698159**
1H0819644A			**698159**
1H0819644B			**698159**
1H0820191A			**508607**
1H0820193A			**508607**
1H0820803D			**699115**
1H0820803D			**699615**
1H0820803J			**699698**
1H0959139B			**509477**
1H1819031B			**812030**
1H1820021			**698080**
1H2819031A			**812031**
1H2820021			**698209**
1J0819644			**698716**
1J0820191B			**508811**
1J0820191D			**508811**
1J0820413D			**817244**
1J0820413H			**814357**
1J0820413L			**817244**
1J0820413N			**817244**
1J0820721AA			**818401**
1J0820721T			**818402**
1J0820803K			**813200**
1J0820803K			**813700**
1J0820803K			**813400**
1J0820803L			**813200**
1J0820803L			**813700**
1J0820805			**813200**
1J0820805			**813700**
1J0820805			**813400**
1J0959126			**509662**
1J1819021			**698262**
1J1819021A			**698262**
1J1819021B			**698262**
1J1819021C			**698262**

OE	IAM	PROD	Valeo
SEAT (.../...)			
1J1820741B			**818404**
1J1907511A			**509572**
1J1907511C			**509573**
1J2819021			**698263**
1J2819021B			**698263**
1J2819021C			**698263**
1J2907511A			**509574**
1K0298403			**509790**
1K0298403A			**509790**
1K0819031			**812254**
1K0819031A			**812254**
1K0819031B			**812254**
1K0819644			**698800**
1K0819644A			**698800**
1K0820411E			**816967**
1K0820411G			**817777**
1K0820411H			**817777**
1K0820411P			**817777**
1K0820679			**509901**
1K0820803G			**699357**
1K0820803H			**699357**
1K0820803N			**699357**
1K0820803N			**699857**
1K0820803Q			**699357**
1K0820803S			**699357**
1K0820803S			**699857**
1K0820859C			**699357**
1K0820859C			**699857**
1K0820859E			**699357**
1K0820859E			**699857**
1K0820859F			**699857**
1K0820859M			**699357**
1K0820859M			**699857**
1K0907511B			**515065**
1K0907511C			**515127**
1K0959126B			**509662**
1K0959263A			**515074**
1K1819015			**698809**
1K1819653A			**698801**
1K1820015			**698811**
1K1820015A			**698811**
1K1820015D			**698811**
1K1820015E			**698811**
1K1820015F			**698811**
1K1820103			**817719**
1K1820103A			**817719**
1K1907511C			**515064**
1K2819015			**698810**
1K2819653A			**715665**
1K2820015			**698812**
1K2820015A			**698812**
1K2820103			**817720**
1L0820191			**508604**
1S0820367			**715744**
357959139B			**509672**
3C0907521F			**515135**
3C2820015			**698812**
3C2820015D			**698812**
3C2820015E			**698812**
6K0820411			**817245**

OE	IAM	PROD	Valeo
SEAT (.../...)			
6K0820411A			**817245**
6K0820413B			**816908**
6K0820721B			**818411**
6K0959139			**508830**
6N0820679A			**508641**
6N0820679C			**508641**
6N0820803A			**699015**
6N0820803A			**699515**
6N0820803B			**699303**
6N0820803C			**699303**
6Q0819031			**812323**
6Q0819653			**698739**
6Q0819653B			**698739**
6Q0820193A			**509594**
6Q0820193B			**509594**
6Q0820367			**698685**
6Q0820411B			**817686**
6Q0820411E			**817686**
6Q0820411H			**817686**
6Q0820411J			**817686**
6Q0820411K			**817686**
6Q0820679A			**509682**
6Q0820803D			**699383**
6Q0820803J			**699383**
6Q0820803K			**699383**
6Q1819015G			**715241**
6Q1819015H			**715241**
6Q1820015H			**715240**
6R0819653			**715727**
6R0820367			**715737**
6R0820411D			**814364**
6X0820191A			**508812**
6X0820191B			**508812**
6X0820413			**817246**
6X0820413A			**817247**
6X0820413A			**817247**
6X0820741B			**818454**
6X0820741E			**818454**
7H0819638A			**698247**
7M0091800			**698696**
7M0819021B			**715028**
7M0819030			**812361**
7M0819644			**698247**
7M0820191A			**508807**
7M0820413F			**816948**
7M0820679A			**509688**
7M0820803P			**699115**
7M0820803P			**699615**
7M0820803Q			**699305**
7M1819015			**715029**
7M1819015			**715239**
7M1819021D			**715029**
7M1819030B			**812324**
7M2819021D			**715030**
7M3819644			**698696**
7M3820411A			**818004**
7M3820411B			**818004**
7M3820411D			**818004**
7M3820411E			**818004**
7M3820803A			**813200**

OE IAM	PROD	Valeo
SEAT (.../...)		
7M3820803A		**813700**
7M3820803A		**813400**
7M3820803B		**813200**
7M3820803B		**813700**
7M3898191		**509593**
7M3898191A		**509593**
8J0260805		**813838**
8L0091800		**698686**
SKODA		
1H0091800		**698686**
1H0819644		**698159**
1H0819644A		**698159**
1H0819644B		**698159**
1H0959139B		**509477**
1H1819031B		**812030**
1H2819031A		**812031**
1J0819644A		**698716**
1J0820191B		**508811**
1J0820191D		**508811**
1J0820413D		**817244**
1J0820413L		**817244**
1J0820413N		**817244**
1J0820721AA		**818401**
1J0820721T		**818402**
1J0820803K		**813200**
1J0820803K		**813700**
1J0820803K		**813400**
1J0820803L		**813200**
1J0820803L		**813700**
1J0820805		**813200**
1J0820805		**813700**
1J0820805		**813400**
1J0959126		**509662**
1J1819021		**698262**
1J1819021A		**698262**
1J1819021B		**698262**
1J1819021C		**698262**
1J1820741B		**818404**
1J1907511A		**509572**
1J1907511C		**509573**
1J2819021		**698263**
1J2819021B		**698263**
1J2819021C		**698263**
1J2907511A		**509574**
1K0298403A		**509790**
1K0819031		**812254**
1K0819031A		**812254**
1K0819031B		**812254**
1K0819644		**698800**
1K0820411E		**816967**
1K0820411E		**817777**
1K0820411P		**817777**
1K0820679		**509901**
1K0820803N		**699357**
1K0820803P		**699357**
1K0820803Q		**699857**
1K0820803S		**699857**
1K0820803S		**699357**
1K0820859D		**699357**

OE IAM	PROD	Valeo
SKODA (.../...)		
1K0820859D		**699857**
1K0820859F		**699857**
1K0820859M		**699857**
1K0907511B		**515065**
1K0907511C		**515127**
1K0959126B		**509662**
1K0959263A		**515074**
1K1819015		**698809**
1K1819653		**698801**
1K1819653A		**698801**
1K1820015		**698811**
1K1820015A		**698811**
1K1820015D		**698811**
1K1820015E		**698811**
1K1820015F		**698811**
1K1820103		**817719**
1K1820103A		**817719**
1K1907511C		**515064**
1K2819015		**698810**
1K2819653A		**715665**
1K2820015		**698812**
1K2820103		**817720**
1S0820367		**715744**
3B0260401		**817679**
3B0260401B		**817679**
3B0820193		**509712**
3C0907521F		**515135**
4B0260805B		**813166**
4B0260805C		**699275**
4B0260805C		**699775**
4B0820177		**508971**
4D0260805C		**699275**
4D0260805C		**699775**
6N0820679C		**508641**
6N0820803A		**699015**
6N0820803A		**699515**
6Q0819031		**812323**
6Q0819653		**698739**
6Q0819653B		**698739**
6Q0820193		**509594**
6Q0820193A		**509594**
6Q0820193B		**509594**
6Q0820367		**698685**
6Q0820411B		**817686**
6Q0820411E		**817686**
6Q0820411H		**817686**
6Q0820411J		**817686**
6Q0820411K		**817686**
6Q0820679A		**509682**
6Q0820803J		**699383**
6Q0820803K		**699383**
6Q1819015H		**715241**
6Q1820015G		**715240**
6Q1820015H		**715240**
6R0819653		**715727**
6R0820367		**715737**
6U0819021		**715039**
6U0819021A		**715039**
6U0820021		**715038**
8D0260805J		**699376**

OE IAM	PROD	Valeo
SKODA (.../...)		
8D1820103D		**817521**
8L0091800		**698686**
SMART		
4518300018		**715608**
4518350247		**715736**
0001110V003		**698774**
0001110V004		**698774**
0001266V002000000		**509685**
0001632V003000000		**817801**
0013871V001		**698802**
SSANGYONG		
6811021000		**715700**
6812008030		**715699**
6923005400		**715566**
6923005410		**715567**
68111091A0		**715624**
SUBARU		
8713950060		**715730**
72880AE090		**715563**
72880AG000		**715619**
72880AJ000		**715620**
72880FE000		**715551**
72880FG000		**715625**
72880SA000		**715651**
72880XA000A		**715619**
73031AA010		**508957**
73031AA011		**508957**
73210AC020		**814259**
73210AC021		**814259**
73210AC050		**818101**
73210AG000		**814314**
73210FC000		**814306**
73210FC030		**814268**
73210FC050		**814311**
73210SA000		**814312**
73412FE000		**515045**
G210FC000		**715626**
G3010SA100		**715651**
G3210AE000		**715563**
G3210FE000		**715680**
GE210FC000		**715626**
SUZUKI		
586154G000		**698681**
9531051K00		**814219**
9531054G01		**814330**
9531060EM1		**814327**
9531060G41		**814305**
9531063J00		**814237**
9531064J00		**814228**
9531067A50		**814244**
9533958J00		**515046**
9533978F01		**515047**
9586051K00		**715644**
9586062J000		**698886**

OE IAM	PROD	Valeo
SUZUKI (.../...)		
9586078F10		**698773**
9586080J00		**715652**
9586081A10		**715668**
9586154G00		**715698**
9586154J00		**715564**
9586157L00		**715743**
9586164J00		**715609**
9586165D000		**698894**
95861M68K10		**715694**
99000990N0F10		**698894**
99000990N0F30		**698894**
99000990N0F40		**698894**
TECNOCAR		
E302		**698198**
E304		**698199**
E305		**698197**
E306		**698203**
E307		**698165**
E308		**698146**
E309		**698174**
E310		**698166**
E311		**698159**
E311		**698885**
E312		**698168**
E313		**698164**
E315		**715530**
E317		**698235**
E318		**698815**
E319		**698149**
E320		**698173**
E321		**698201**
E323		**698201**
E323		**715617**
E327		**698475**
E329		**698247**
E330		**698170**
E337		**698169**
E341		**698488**
E343		**698878**
E344		**698255**
E345		**698177**
E346		**698167**
E348		**698279**
E354		**698290**
E359		**715619**
E363		**698487**
E366		**698662**
E366		**698663**
E369		**698771**
E372		**698680**
E373		**698773**
E382		**698664**
E383		**698731**
E394		**698680**
E397		**698700**
E400		**698711**
E403		**698535**
E407		**698734**
E410		**698876**

OE IAM	PROD	Valeo
TECNOCAR (.../...)		
E416		**715627**
E442		**715510**
EC305		**698687**
EC323		**715617**
EC355		**698688**
EC380		**698747**
EC382		**698714**
EC388		**698715**
EC393		**698692**
EC398		**698693**
EC400		**698710**
TOYOTA		
1854146		**699393**
1854146		**699893**
88972207		**814211**
447220393		**813243**
897400820		**715619**
897400820		**715650**
897400850		**715701**
8710712340		**812286**
8713902020		**715620**
8713932010		**715620**
8713933010		**715619**
8713947010		**698796**
8713947083		**698796**
8713949010		**698796**
8713950060		**715730**
8713952010		**698681**
8713952020		**715620**
8832042080		**813243**
8832052040		**813224**
8845002150		**817805**
8845002170		**814263**
8845002240		**814210**
8845005010		**817802**
8845005020		**817803**
8845005070		**817802**
8845005100		**814208**
8845005110		**814160**
8845005120		**814209**
8845005140		**814271**
8845005170		**814213**
8845012280		**814234**
8845012290		**814205**
8845047020		**814158**
8845047020		**814158**
8846002050		**814298**
8846006050		**814247**
8846006060		**814283**
8846006061		**814247**
8846012460		**814248**
8846012480		**818107**
8846012540		**814238**
8846020370		**814246**
8846020470		**818104**
8846028550		**814261**
8846032050		**814279**
8846032090		**814279**
8846033010		**814282**

OE IAM	PROD	Valeo
TOYOTA (.../...)		
8846035080		**818103**
8846035090		**818103**
8846035130		**814245**
8846035200		**814308**
8846035280		**814269**
8846042011		**814285**
8846042020		**814285**
8846042021		**814285**
8846042070		**814218**
8846042100		**814204**
8846044020		**818105**
8846044030		**818105**
8846044040		**818105**
8846044050		**818105**
8846044350		**818032**
8846044350		**818032**
8846044440		**814207**
8846052010		**814307**
8846052020		**817674**
8846052040		**814309**
8846052110		**814233**
8846074010		**814220**
8846135160		**814236**
8846160051		**814280**
8846160091		**814230**
8846160100		**814203**
8847116040		**508954**
8847120050		**508805**
8847128070		**508805**
8847134010		**508805**
8847150010		**508805**
8847160010		**508805**
8847417010		**509794**
8847447010		**509794**
8850152040		**818975**
8850530100		**715729**
8850812010		**715565**
8850812030		**715565**
8851516060		**509970**
8851520100		**509491**
8851533010		**509492**
8851552010		**509972**
8851552020		**509863**
8851552020		**509972**
8851552040		**509972**
8856802030		**698795**
8856852010		**698681**
8888020060		**715572**
8888020080		**715572**
8888020130		**715572**
6455EE		**818014**
6455EF		**818013**
870500H010		**812379**
870500H020		**812380**
870500H030		**812381**
870500H04000		**812414**
870500H05000		**812415**
871030H010		**715221**
871030H010		**715221**
871030H020		**715068**

OE IAM	PROD	Valeo
TOYOTA (.../...)		
871030H020		**715068**
871030H030		**715069**
871030H030		**715069**
871030H040		**715067**
871030H040		**715067**
871380H01000		**515037**
871394701083		**698796**
87139YZZ03		**715619**
87139YZZ06		**715689**
87139YZZ07		**698795**
87139YZZ08		**715620**
883100H010		**699392**
883100H020		**699393**
883100H020		**699893**
883202B400		**813842**
884500D020		**817674**
884500F100		**814212**
884500H010		**818014**
884500H020		**818013**
884600D050		**814223**
884600D060		**814224**
885080H010		**715515**
885150H010		**509968**
VAUXHALL		
1131487		**508914**
1135008		**699070**
1135008		**699570**
1135046		**699574**
1135295		**699072**
1135295		**699572**
1135312		**699071**
1135312		**699571**
1618044		**812110**
1845046		**698393**
1854124		**699071**
1854124		**699571**
1854125		**699077**
1854125		**699577**
1854129		**699070**
1854129		**699570**
1854141		**699072**
1854141		**699572**
3050602		**812148**
3054182		**812150**
6854021		**699748**
6854025		**699307**
6854025		**699807**
6854026		**699251**
6854026		**699751**
6854028		**699308**
6854028		**699808**
6854031		**699324**
6854031		**699824**
6854035		**699317**
6854035		**699817**
6854036		**699355**
6854036		**699855**
6854037		**699318**
6854037		**699818**

OE IAM	PROD	Valeo
VAUXHALL (.../...)		
6854058		**813600**
6854059		**699862**
6854066		**813604**
9109424		**817689**
9117114		**509862**
9117283		**812222**
9117400		**509400**
9118440		**812118**
9118699		**698708**
9118918		**698393**
9119176		**817505**
9119416		**509687**
9121625		**715632**
9121627		**698875**
9122113		**818498**
9131721		**509485**
9132922		**699308**
9132922		**699808**
9132925		**699307**
9132925		**699807**
9161208		**817065**
9161209		**814086**
9165715		**509591**
9174396		**699250**
9174396		**699750**
9174397		**699251**
9174397		**699751**
9180015		**698803**
9180016		**698804**
9180222		**698805**
9192320		**698746**
9192937		**812285**
9194851		**812126**
9196140		**812225**
9196195		**509409**
9196805		**698773**
9196953		**699072**
9196953		**699572**
9200067		**698165**
9209607		**818093**
9225560		**699318**
9225560		**699818**
9228317		**698806**
12792669		**813686**
13106817		**817853**
13114943		**817809**
13124751		**813101**
13124752		**813602**
13128933		**509951**
13139055		**813605**
13140505		**699355**
13140505		**699855**
13175553		**698874**
13175554		**698875**
13191995		**699317**
13191995		**699817**
13197538		**813626**
13205197		**699869**
13221348		**698805**
13221349		**698806**

OE IAM	PROD	Valeo
VAUXHALL (.../...)		
13221350		**698803**
24411270		**699317**
24411270		**699817**
24418362		**817647**
24418363		**817648**
24418364		**817852**
24418368		**509692**
24418371		**509693**
24421642		**699306**
24421642		**699806**
24427890		**699102**
24427890		**699602**
24430230		**699301**
24430319		**699324**
24430319		**699824**
24432574		**699077**
24432574		**699577**
52420930		**715659**
52425938		**715658**
52460909		**508970**
52463287		**812149**
52464310		**508740**
52464434		**509687**
52470574		**698712**
52476627		**818093**
52484484		**817670**
52484491		**509564**
52488847		**812146**
55700406		**818193**
55700408		**818192**
55702456		**715552**
55702468		**715553**
90228759		**509731**
90229051		**715037**
90295325		**509729**
90359991		**509668**
90386776		**698166**
90421995		**509730**
90463839		**812117**
90486282		**698165**
90486845		**508739**
90506752		**509669**
90509367		**698166**
90510338		**698167**
90511659		**816902**
90511660		**816924**
90512200		**812118**
90512364		**508650**
90512706		**715645**
90512779		**698202**
90520689		**698662**
90535076		**509405**
90535096		**817530**
90535114		**698564**
90541100		**715035**
90541114		**816924**
90541317		**715675**
90542762		**509581**
90559549		**698663**
90559843		**699899**

OE	IAM	PROD	Valeo
VAUXHALL (.../...)			
90559848			**509400**
90559855			**699250**
90559855			**699750**
90564976			**699767**
90589511			**715036**
91132359			**698875**
91132364			**698708**
91151169			**508625**
91157056			**508660**
91158687			**715059**
91158688			**515067**
91158691			**509900**
91158692			**812375**
91160128			**715513**
91166018			**817577**
91168188			**817645**
91168643			**817644**
93161216			**715060**
93161217			**509899**
93170608			**818047**
93170609			**509691**
93170621			**817505**
93170622			**817506**
93172074		EVA	**817718**
93172129			**698710**
93172299			**698711**
93174800			**698876**
93174801			**698877**
93175260			**812363**
93175774			**818118**
93175776			**817609**
93176870			**699743**
93177215			**817843**
93177218			**509929**
93177423			**817844**
93178958			**817839**
93178960			**818114**
93178961			**817847**
93182213			**818168**
93182436			**698663**
93183711			**817843**
93187228			**699868**
93194847			**715644**
93250611			**816902**
96440878			**715654**
97114233			**699070**
97114233			**699570**
97170804			**715569**
13128931			**817798**
13148296			**814014**
90541011			**515073**
91151481			**812077**
93161916			**813644**
96805196			**814359**
R1580030			**699912**
R1580052			**699771**
R1580054			**699368**
VISEON BUS			
H14003495			**716064**

OE	IAM	PROD	Valeo
VOLKSWAGEN			
646164			**508690**
646191			**508694**
191091700			**715653**
191819031			**812030**
191819638			**715653**
191820679			**508690**
357819638			**698163**
357820021			**698157**
357820191			**508605**
358820021			**715004**
701819167			**715043**
701820679			**508694**
701820805			**699193**
701820805			**699693**
703819167			**715044**
703819989			**698794**
893819021			**698030**
893820021			**698030**
171819031A			**812034**
171819031E			**812034**
171820021D			**715040**
191819031F			**812030**
191820191A			**508922**
1C0820191			**509957**
1C0820191B			**509957**
1C0820191C			**509957**
1C0820413A			**817427**
1C0820413E			**817427**
1C0820413G			**817427**
1H0091800			**698686**
1H0819638			**698160**
1H0819638A			**698160**
1H0819644			**698159**
1H0819644A			**698159**
1H0819644A			**698679**
1H0819644B			**698159**
1H0820191A			**508607**
1H0820193A			**508607**
1H0820413			**816910**
1H0820679			**508641**
1H0820679			**508648**
1H0820679A			**508648**
1H0820803D			**699115**
1H0820803D			**699615**
1H0820803J			**699698**
1H0959139B			**509477**
1H1819031A			**812030**
1H1819031B			**812030**
1H1820021			**698080**
1H1820413			**816910**
1H2819031A			**812031**
1H2820021			**698209**
1HM820413B			**817024**
1HM820413B			**817024**
1J0819644			**698716**
1J0819644A			**698716**
1J0820191B			**508811**
1J0820191D			**508811**
1J0820413B			**817244**
1J0820413D			**817244**

OE	IAM	PROD	Valeo
VOLKSWAGEN (.../...)			
1J0820413H			**814357**
1J0820413L			**817244**
1J0820413N			**817244**
1J0820721AA			**818401**
1J0820721T			**818402**
1J0820803A			**813200**
1J0820803A			**813700**
1J0820803F			**813400**
1J0820803K			**813200**
1J0820803K			**813700**
1J0820803K			**813400**
1J0820805			**813200**
1J0820805			**813700**
1J0820805			**813400**
1J0959126			**509662**
1J1819021			**698262**
1J1819021A			**698262**
1J1819021B			**698262**
1J1819021C			**698262**
1J1820741B			**818404**
1J1907511A			**509572**
1J1907511C			**509573**
1J2819021			**698263**
1J2819021A			**698263**
1J2819021B			**698263**
1J2819021C			**698263**
1J2907511A			**509574**
1K0298403A			**509790**
1K0819031			**812254**
1K0819031A			**812254**
1K0819031B			**812254**
1K0819644			**698800**
1K0819644A			**698800**
1K0820411E			**816967**
1K0820411H			**817777**
1K0820411P			**817777**
1K0820679			**509901**
1K0820803F			**699357**
1K0820803F			**699857**
1K0820803G			**699357**
1K0820803L			**699357**
1K0820803N			**699357**
1K0820803N			**699857**
1K0820803P			**699357**
1K0820803Q			**699357**
1K0820803Q			**699857**
1K0820803S			**699857**
1K0820803S			**699357**
1K0820859C			**699357**
1K0820859C			**699857**
1K0820859D			**699357**
1K0820859D			**699857**
1K0820859E			**699357**
1K0820859E			**699857**
1K0820859F			**699857**
1K0820859F			**699357**
1K0820859M			**699357**
1K0820859M			**699857**
1K0907511B			**515065**
1K0907511C			**515127**

OE IAM	PROD	Valeo
VOLKSWAGEN (.../...)		
1K0959126B		**509662**
1K0959263A		**515074**
1K0959263A		**515074**
1K1819015		**698809**
1K1819653		**698801**
1K1819653A		**698801**
1K1820015		**698811**
1K1820015D		**698811**
1K1820015E		**698811**
1K1820015F		**698811**
1K1820103		**817719**
1K1820103A		**817719**
1K1907511C		**515064**
1K2819015		**698810**
1K2819653B		**715665**
1K2820015		**698812**
1K2820103		**817720**
1S0820367		**715744**
1T0820411B		**817806**
1T0820411C		**817806**
1T0820411E		**817806**
253260633E		**509570**
281265303A		**812245**
281265303B		**812245**
2D0820191		**509956**
2D0820413A		**816996**
2D0820413C		**816996**
2D0820805B		**699193**
2D0820805B		**699693**
2D0820805D		**699193**
2D0820805D		**699693**
2D1959101B		**715246**
2E0819638		**715601**
2E0819638A		**715602**
2E0820413		**818173**
357 820 803 C		**699514**
357820191A		**508606**
357820191C		**508606**
357820191D		**508606**
357820803A		**699517**
357820803Q		**699016**
357820803Q		**699516**
357820803R		**699013**
357820803R		**699513**
357959139B		**509672**
3A0819638		**698163**
3A0819644		**698163**
3A0820191		**508605**
3B0260401		**817679**
3B0260401A		**817679**
3B0260401B		**817679**
3B0820193		**509712**
3C0820411C		**814002**
3C0820411E		**814002**
3C0898191		**509926**
3C0907521F		**515135**
3C2820015		**698812**
3C2820015D		**698812**
3C2820015E		**698812**
3C2820015F		**698812**

OE IAM	PROD	Valeo
VOLKSWAGEN (.../...)		
3D0898644		**698793**
4B0260805B		**813166**
4B0260805C		**699275**
4B0260805C		**699775**
4B0260805N		**699275**
4B0260805N		**699775**
4B0820177		**508971**
4B0820192		**508881**
4B0820193		**508881**
4D0260805C		**699275**
4D0260805C		**699775**
5C0820411		**814369**
5Q0818653		**715720**
6E0820413		**817246**
6K0820413A		**816908**
6K0820413B		**816908**
6K0820721B		**818411**
6K0959139		**508830**
6N0820679A		**508641**
6N0820679A		**508648**
6N0820679C		**508641**
6N0820679C		**508648**
6N0820803A		**699015**
6N0820803A		**699515**
6N0820803B		**699303**
6N0820803C		**699303**
6Q0819031		**812323**
6Q0819653		**698739**
6Q0819653B		**698739**
6Q0820193		**509594**
6Q0820193B		**509594**
6Q0820367		**698685**
6Q0820411B		**817686**
6Q0820411H		**817686**
6Q0820411J		**817686**
6Q0820411K		**817686**
6Q0820679		**509682**
6Q0820679A		**509682**
6Q0820803D		**699383**
6Q0820803H		**699372**
6Q0820803J		**699383**
6Q0820803K		**699383**
6Q1819015G		**715241**
6Q1820015H		**715240**
6R0819653		**715727**
6R0820367		**715737**
6U0819021		**715039**
6U0819021A		**715039**
6U0820021		**715038**
6X0820191A		**508812**
6X0820413		**817246**
6X0820413A		**817247**
6X0820741E		**818454**
701819031A		**812013**
701820679E		**508645**
701820679E		**509409**
701820805Q		**699152**
701820805Q		**699652**
701820807A		**699012**
701820807A		**699512**

OE IAM	PROD	Valeo
VOLKSWAGEN (.../...)		
7D0819989		**698794**
7D0819989		**698794**
7D0820191		**509728**
7D0820805C		**699161**
7D0820805C		**699661**
7D0820805E		**699012**
7D0820805E		**699512**
7D0820805G		**699161**
7D0820805G		**699661**
7D0820805H		**699161**
7D0820805H		**699661**
7H0819631		**715581**
7H0819631		**715581**
7H0819631A		**698768**
7H0819631A		**698768**
7H0820805E		**813829**
7L0820411D		**817838**
7L0820411F		**817838**
7L0820411G		**817838**
7L0898191A		**509932**
7M0091800		**698696**
7M0819021B		**715028**
7M0819030		**812361**
7M0819638A		**698247**
7M0819644		**698247**
7M0820191A		**508807**
7M0820413F		**816948**
7M0820679A		**509688**
7M0820803P		**699115**
7M0820803P		**699615**
7M0820803Q		**699305**
7M1819021B		**715029**
7M1819021D		**715029**
7M1819021D		**715239**
7M1819030B		**812324**
7M2819021A		**715030**
7M2819021B		**715030**
7M2819021D		**715030**
7M3819644		**698696**
7M3819644A		**698696**
7M3820411A		**818004**
7M3820411B		**818004**
7M3820411E		**818004**
7M3820803A		**813200**
7M3820803A		**813700**
7M3820803A		**813400**
7M3898191		**509593**
7M3898191A		**509593**
7P0819631		**715704**
867819121A		**812029**
8A0819439A		**698164**
8A1820021		**698215**
8D0260401A		**816967**
8D0260401C		**816967**
8D0260401D		**816967**
8D0260401H		**816967**
8D0260403C		**816967**
8D0260403D		**816967**
8D0260403E		**816967**
8D0260403G		**817840**

OE	IAM	PROD	Valeo
VOLKSWAGEN (.../...)			
8D0260403H			**816967**
8D0260701H			**818449**
8D0260805D			**699222**
8D0260805D			**699722**
8D0260805F			**699222**
8D0260805F			**699722**
8D0260805J			**699376**
8D0260805M			**699222**
8D0260805M			**699722**
8D0820193			**509501**
8D0959482B			**509661**
8D1260710B			**818450**
8D1260710F			**818450**
8D1820103D			**817521**
8D2820021			**698216**
8J0260805			**813838**
8L0091800			**698686**
A9065000054			**818173**
W06K0820411			**817245**
VOLVO			
3200712			**812093**
3402363			**812326**
3485087			**699641**
8601533			**699260**
8601535			**699259**
8601537			**699166**
8601537			**699666**
8601632			**699263**
8601957			**699166**
8601957			**699666**
8602278			**699264**
8602359			**699264**
8602506			**699261**
8602620			**699261**
8602621			**699262**
8602622			**699264**
8602925			**813323**
8687389			**715627**
9132754			**509674**
9166174			**509569**
9171271			**817675**
9171296			**698770**
9171345			**699753**
9171503			**812328**
9171756			**715512**
9171757			**715571**
9187629			**508928**
9204626			**698771**
9204627			**715687**
12595195			**509673**
13248299			**508970**
13432166			**509478**
30612666			**698769**
30613408			**699259**
30621525			**509568**
30621526			**509568**
30662349			**715676**
30676523			**515054**
30733893			**715702**

OE	IAM	PROD	Valeo
VOLVO (.../...)			
30738666			**515054**
30742232			**515048**
30767022			**715597**
30767024			**715702**
30780200			**515048**
30780377			**715628**
30780713			**515054**
30781281			**814161**
30818694			**715688**
30871579			**817559**
30883952			**715676**
30897260			**817560**
31305837			**813270**
35131465			**699714**
35450865			**508971**
35450956			**508831**
35455542			**508928**
36000570			**813323**
36002424			**813271**
68485325			**509479**
68495753			**817675**
91442210			**812327**
91660456			**699753**
91876292			**508928**
VOLVO TRUCKS			
1071995			**813032**
1584575			**716045**
1618848			**815970**
1624373			**812345**
1697358			**812344**
3090893			**812343**
3962650			**813013**
3980841			**818987**
3980841			**818987**
3981637			**818984**
3981637			**818984**
4771477			**716041**
8142555			**813012**
8143691			**716045**
8144430			**716045**
8157212			**818039**
8191892			**813017**
8191892			**813017**
11007388			**716041**
20532914			**812343**
20559447			**716009**
81436917			**716041**
110073889			**716041**
20409908			**716053**
3962651			**818991**
3962652			**818990**
8113628			**813017**
8144690			**818989**
ZAFFO			
Z016			**698840**
Z049			**715595**
Z050			**715601**

OE	IAM	PROD	Valeo
ZAFFO (.../...)			
Z050			**715602**
Z300			**698199**
Z314			**698171**
Z318			**698165**
Z318			**715632**
Z318			**715675**
Z319			**698166**
Z323			**698170**
Z328			**698168**
Z328			**698779**
Z328			**715674**
Z329			**698159**
Z329			**698160**
Z329			**698679**
Z329			**698686**
Z329			**698885**
Z330			**698697**
Z332			**698163**
Z333			**698235**
Z335			**698172**
Z338			**698703**
Z338			**698704**
Z340			**715514**
Z341			**698146**
Z341			**715677**
Z345			**698688**
Z346			**715530**
Z347			**698167**
Z348			**698164**
Z348			**715578**
Z350			**698197**
Z350			**698687**
Z350			**698689**
Z352			**698682**
Z353			**698173**
Z355 Couple			**715531**
Z356			**698201**
Z356			**715617**
Z357			**698247**
Z357			**698696**
Z359 Couple			**698246**
Z359 Couple			**715685**
Z360			**698149**
Z362			**698174**
Z368			**698177**
Z370			**698198**
Z371			**698858**
Z372			**698691**
Z374			**698684**
Z376			**698663**
Z376			**698708**
Z377			**698723**
Z378			**698770**
Z379 Couple			**698290**
Z379 Couple			**715568**
Z380			**698279**
Z381			**715538**
Z382			**698276**
Z383			**698196**
Z383			**698819**

OE IAM	PROD	Valeo
ZAFFO (.../...)		
Z383		**698869**
Z385		**698662**
Z385		**698709**
Z385		**698874**
Z385		**698875**
Z386		**698487**
Z386		**698695**
Z387		**698454**
Z388		**698860**
Z389		**698859**
Z390		**698716**
Z391 Couple		**715561**
Z392		**698255**
Z392		**715633**
Z394		**698475**
Z394		**698744**
Z396		**698707**
Z397		**698488**
Z397		**698749**
Z398		**698683**
Z399		**698790**
Z399		**698791**
Z400		**698535**
Z403		**698489**
Z403		**698750**
Z404 Couple		**698470**
Z404 Couple		**698838**
Z406		**698690**
Z407		**698771**
Z408		**698774**
Z409		**698777**
Z409		**698778**
Z410		**715646**
Z411		**698734**
Z412		**698203**
Z412		**698748**
Z413		**698773**
Z414		**698681**
Z414		**715650**
Z415		**698878**
Z416		**698700**
Z416		**698742**
Z416		**698743**
Z417		**698512**
Z418		**698879**
Z418		**698880**
Z419		**698680**
Z419		**715612**
Z420		**715512**
Z421		**698710**
Z422		**698775**
Z422		**698776**
Z423		**698739**
Z424		**698685**
Z425		**715670**
Z426 Couple		**698747**
Z427 Couple		**698712**
Z428		**698606**
Z429		**698594**
Z429		**698715**

OE IAM	PROD	Valeo
ZAFFO (.../...)		
Z430		**698745**
Z431		**698746**
Z432 Couple		**698873**
Z434		**698769**
Z434		**715676**
Z435		**698815**
Z436		**698839**
Z436		**698867**
Z437		**698657**
Z437		**715629**
Z438		**698865**
Z439 Couple		**698890**
Z439 Couple		**698891**
Z440		**715549**
Z441		**698731**
Z442		**715542**
Z444		**715573**
Z445		**715626**
Z446		**698664**
Z446		**698714**
Z447		**715517**
Z447		**715591**
Z448		**698888**
Z450		**715572**
Z451		**698692**
Z451		**715686**
Z452		**715509**
Z453 Couple		**715548**
Z454		**698794**
Z455 Couple		**715594**
Z456 Couple		**698735**
Z457		**698795**
Z458 Couple		**698856**
Z458 Couple		**698857**
Z459		**698702**
Z459		**698741**
Z461		**698751**
Z462		**715516**
Z463		**715527**
Z464		**698738**
Z464		**715558**
Z465		**698762**
Z466		**698711**
Z467 Couple		**715525**
Z468		**698693**
Z468		**698694**
Z469 Couple		**715536**
Z470		**698730**
Z470		**715539**
Z472		**698886**
Z472		**715695**
Z473		**698800**
Z473		**698801**
Z473		**715665**
Z474		**715560**
Z474		**715623**
Z474		**715630**
Z474		**715631**
Z475		**715701**
Z476		**698768**

OE IAM	PROD	Valeo
ZAFFO (.../...)		
Z476		**715581**
Z477		**698876**
Z477		**698877**
Z478		**698870**
Z478		**715679**
Z479		**715551**
Z479		**715680**
Z480		**698753**
Z480		**715708**
Z481		**698737**
Z481		**715562**
Z482		**698736**
Z482		**715610**
Z483 Couple		**715522**
Z485 Couple		**715523**
Z486		**698713**
Z487		**698866**
Z487		**715723**
Z488		**698724**
Z488		**698725**
Z489		**698540**
Z489		**698541**
Z490		**715641**
Z491		**698882**
Z491		**698883**
Z492		**715505**
Z493		**715534**
Z494		**698871**
Z494		**698872**
Z495 Couple		**715508**
Z496		**715500**
Z496		**715501**
Z497		**698868**
Z498		**715590**
Z499		**698861**
Z499		**698862**
Z500		**698893**
Z501 Couple		**698863**
Z501 Couple		**698864**
Z502		**698892**
Z503		**715535**
Z505		**715524**
Z505		**715666**
Z506		**715526**
Z507		**715521**
Z508		**715506**
Z508		**715507**
Z510		**715510**
Z510		**715511**
Z510		**715627**
Z510		**715628**
Z511		**698796**
Z511		**715550**
Z511		**715619**
Z512		**698884**
Z512		**715570**
Z513		**698802**
Z513		**715603**
Z514		**698895**
Z515		**715502**

OE IAM	PROD	Valeo
ZAFFO (.../...)		
Z515		**715503**
Z516		**715515**
Z517		**715532**
Z517		**715533**
Z518 Couple		**698793**
Z519		**715518**
Z519		**715519**
Z520 Couple		**715643**
Z521 Couple		**715544**
Z522 Couple		**715529**
Z523		**715541**
Z524		**715520**
Z526		**715552**
Z526		**715553**
Z527		**715504**
Z528		**715620**
Z529		**715564**
Z529		**715609**
Z530		**715698**
Z531		**715718**
Z532		**715588**
Z533 Couple		**715567**
Z536 Couple		**715624**
Z537		**715615**
Z538		**715648**
Z539		**715637**
Z540		**715556**
Z540		**715557**
Z541		**715540**
Z542		**715636**
Z543		**715546**
Z544		**715597**
Z545		**715569**
Z546		**715596**
Z546		**715638**
Z547		**698894**
Z547		**715668**
Z548		**715585**
Z548		**715586**
Z549		**715537**
Z551		**715608**
Z552 Couple		**715639**
Z553		**715702**
Z554 Couple		**715554**
Z554 Couple		**715555**
Z555		**715613**
Z555		**715614**
Z557		**715654**
Z559 Couple		**715574**
Z561 Couple		**715545**
Z562		**715592**
Z563 Couple		**715699**
Z564		**715579**
Z564		**715580**
Z565		**715640**
Z566		**715559**
Z567		**715600**
Z568		**715651**
Z569		**715625**
Z570 Couple		**715583**

OE IAM	PROD	Valeo
ZAFFO (.../...)		
Z570 Couple		**715584**
Z571		**715642**
Z572		**715616**
Z573		**715644**
Z574 Couple		**715607**
Z575		**715635**
Z577		**715658**
Z577		**715659**
Z579		**715663**
Z580		**715667**
Z580		**715724**
Z581		**715649**
Z582		**715647**
Z583		**715660**
Z583		**715661**
Z584		**715662**
Z585		**715712**
Z586		**715681**
Z588		**715694**
Z589		**715691**
Z590 Couple		**715690**
Z590 Couple		**715715**
Z591		**715672**
Z593		**715709**
Z594		**715721**
Z594		**715722**
Z595		**715704**
Z596		**715692**
Z600		**715706**
Z601		**715705**
Z602		**715693**
Z607		**715697**
Z610		**715716**
Z612		**715717**
Z613		**715673**
Z616		**715652**
Z617		**715513**
ZF375		**698202**
ZF592 Couple		**715696**
ZF598 Couple		**715669**
ZF608 Couple		**715713**
ZF608 Couple		**715714**

OE IAM	PROD	Valeo

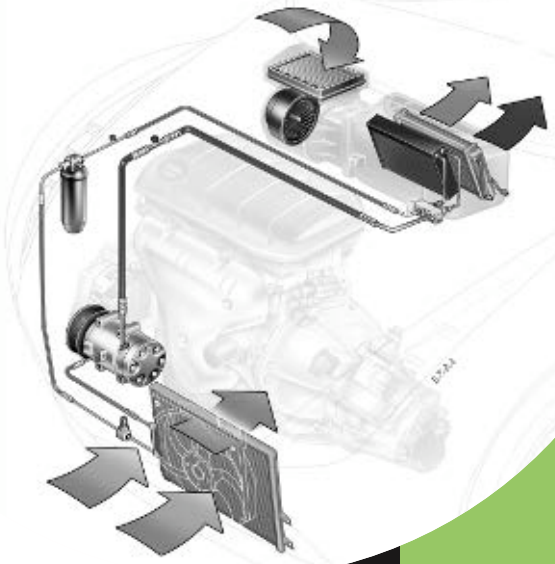

5.2

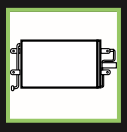

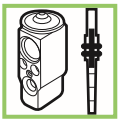

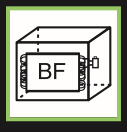

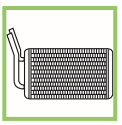

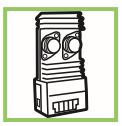
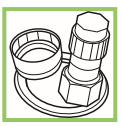
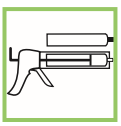

Valeo		
508291	**FIAT**	Punto II (99>2003)
508555	**PEUGEOT**	405
508588	**RENAULT**	Master (97>2003), R19, R21
508594	**MERCEDES**	190 (201)
508597	**CITROËN**	AX (86>98), BX
508599	**BMW**	3 series E36, M3, Z3
508603	**PEUGEOT**	205, 309 (85>94)
508604	**SEAT**	Toledo (91>98)
508605	**VOLKSWAGEN**	Passat (93>97)
508606	**VOLKSWAGEN**	Passat (88>93)
508607	**VOLKSWAGEN**	Caddy (95>2004), Golf II Cabriolet (93>2002) Golf III, Lupo, Polo (94>2001), Vento
508609	**RENAULT**	Safrane
508610	**RENAULT**	R19
508611	**ALFA ROMEO**	164 (87>98)
508612	**RENAULT**	Master (97>), R9, R21, R25, Super 5
508613	**RENAULT**	Twingo (93>)
508615	**RENAULT**	R19
508616	**RENAULT**	R19
508619	**RENAULT**	Espace (84>96)
508620	**RENAULT**	Clio (90>98), Express (91>), Extra (91>97) Lutecia (Jap), Rapid II
508622	**RENAULT**	Safrane
508623	**RENAULT**	Espace III, Laguna (94>2000)
508624	**RENAULT**	Mégane (95>)
508625	**OPEL**	Frontera (91>98)
508626	**ROVER**	400 (95>)
508627	**ROVER**	RV8
508628	**LANCIA**	Dedra, Delta (93>99)
508629	**ROVER**	200 (95>99)
508630	**LANCIA**	Dedra, Delta (93>99)
508631	**RENAULT**	Espace III, Laguna (94>98)
508635	**SAAB**	9000, 900 (79>93)
508637	**SAAB**	9000
508639	**CITROËN**	Xantia (93>2002)
508641	**VOLKSWAGEN**	Bora, Caddy, Corrado, Golf II, Golf III Golf IV, Jetta (2000>2003), Lupo, New Beetle Passat (88>97), Polo (94>2001), Vento
508642	**SAAB**	900 (93>)
508643	**MERCEDES**	C Class (202), E Class (210), SLK (R170) Sprinter, V Class (638, 2), Vito
508644	**RENAULT**	Mégane (95>99)
508645	**VOLKSWAGEN**	Transporter (F70) (90>96)
508646	**RENAULT**	Mégane Scénic (96>2003)
508648	**VOLKSWAGEN**	Corrado, Golf II Cabriolet (93>98), Golf III Passat (88>93), Vento
508649	**PEUGEOT**	106, 406, 607
508650	**VAUXHALL**	Vectra (95>2002)
508651	**RENAULT**	Master (97>2003)
508652	**ROVER**	200, 25
508653	**LANCIA**	Y (95>2000)
508654	**FIAT**	Cinquecento, Ducato (94>2001), Tempra, Tipo
508655	**SAAB**	9000
508657	**RENAULT**	Espace II (91>96)
508658	**LANCIA**	Dedra, Kappa, Y (95>2000)
508659	**ROVER**	200, 25, 400, 45, RV8
508660	**VAUXHALL**	Frontera (91>98)
508663	**RENAULT**	Express, Extra, Rapid, R19
508665	**RENAULT**	Clio (90>98), Espace III, Laguna (94>2000) Master (97>2003), Mégane (95>99) Mégane Scénic (96>99), Twingo (93>)
508690	**VOLKSWAGEN**	Corrado, Golf II, Golf II Cabriolet (93>98) Jetta (78>92), Passat (88>93)
508694	**VOLKSWAGEN**	Transporter (F70) (90>96)
508695	**PEUGEOT**	605 (94>99)
508696	**PEUGEOT**	106, 405, 605, Partner, Ranch
508697	**PEUGEOT**	605 (89>99), 806 (94>2002) Expert II (95>2006)
508698	**RENAULT**	R21
508703	**CITROËN**	Xantia (93>2002)
508704	**RENAULT**	R19, Safrane
508705	**RENAULT**	Kangoo (97>2003), Mégane (95>99)
508731	**MERCEDES**	200, 300 (124), E Class (124)
508736	**FORD**	Courrier (91>96), Fiesta (89>95)

Valeo		
508737	**PEUGEOT**	205, 305, 504, 505, 604, 605
508738	**PEUGEOT**	306 (93>97), Partner (96>2002) Ranch (96>2002)
508739	**VAUXHALL**	Calibra, Cavalier III, Combo, Corsa I, Tigra
508740	**VAUXHALL**	Astra III (91>98)
508741	**PEUGEOT**	806 (94>2002), Expert, Expert II
508761	**RENAULT**	R21
508762	**PEUGEOT**	106 (91>2003)
508763	**MERCEDES**	200, 300 (123), V Class (638, 2) Vito (96>2003)
508777	**CITROËN**	Xantia (93>2002), Xsara (97>2000)
508782	**PEUGEOT**	605 (89>94)
508784	**PEUGEOT**	405 (92>96), 406 (95>), 605 (94>99) 607 (2000>), Partner (96>2002)
508787	**RENAULT**	Express (85>), Extra (85>97), Rapid (85>91) Super 5
508789	**RENAULT**	Express (91>), Extra (91>97)
508791	**RENAULT**	Clio II (98>2001), R19
508792	**RENAULT**	Mégane (95>99), Mégane Scénic (96>99) Safrane
508801	**PEUGEOT**	406 (95>)
508805	**TOYOTA**	4 Runner, Camry, Carina E, Celica (ST200) Corolla (100), Corolla (110) Hi-Lux (8-9-10), Land Cruiser (BJ70)/(KZ VZ9), MR 2 (AW20), Paseo, Picnic (96>2001) Previa (TCR), RAV4, Starlet (EP91)
508807	**VOLKSWAGEN**	Sharan (95>2000)
508811	**VOLKSWAGEN**	Bora, Golf IV (97>2003) New Beetle (2001>2005)
508812	**VOLKSWAGEN**	Lupo, Polo (99>2001)
508814	**BMW**	3 series E36, M3, Z3
508815	**BMW**	5 series E34, M5, 7 series E32
508817	**BMW**	3 series E30, M3
508818	**BMW**	5 series E39, 7 series E38
508819	**MERCEDES**	E Class (124)
508825	**SAAB**	9000, 900 (93>)
508829	**SAAB**	9000
508830	**VOLKSWAGEN**	Caddy (95>2004), Polo (99>2001)
508831	**VOLVO**	850
508833	**RENAULT**	Clio II, Kangoo (97>2003) Kangoo Extra (98>2003)
508834	**PEUGEOT**	405 (87>96)
508835	**CITROËN**	Xantia (93>2002)
508836	**CITROËN**	Xantia (93>2002)
508837	**CITROËN**	Xsara (97>2000), ZX
508840	**PEUGEOT**	605 (89>99)
508866	**RENAULT**	Clio II (98>2001), Kangoo (97>2003)
508869	**FIAT**	Punto (93>99)
508870	**CITROËN**	Saxo (96>99)
508871	**CITROËN**	Saxo (96>99)
508872	**PEUGEOT**	406 (95>)
508873	**PEUGEOT**	306 (97>), Partner (96>2002), Ranch (96>2002)
508874	**PEUGEOT**	106 (96>2003)
508879	**FORD**	Fiesta (89>95)
508880	**AUDI**	90 (87>95), Coupé (88>96)
508881	**VOLKSWAGEN**	Passat (96>2000)
508882	**AUDI**	80 (91>95), 100 (90>94), A6 (94>2001) Cabriolet
508885	**AUDI**	100 (90>94), A6 (94>)
508888	**FORD**	Mondeo (93>2000)
508889	**FORD**	Probe
508891	**JEEP**	Cherokee (77>2001), Grand Cherokee (93>99)
508892	**JEEP**	Cherokee (77>2001), Grand Cherokee (93>99)
508895	**CHRYSLER**	Stratus
508898	**CHRYSLER**	Voyager (91>95)
508899	**CHRYSLER**	Voyager (91>2001)
508900	**JAGUAR**	XJ (86>94), XJS (83>96)
508902	**JAGUAR**	XJ (86>94), XJR
508906	**MERCEDES**	SL (129)
508907	**MERCEDES**	SL (129)
508909	**MERCEDES**	C Class (202) (93>2001), CLK (208)
508911	**MERCEDES**	E Class (210)
508914	**VAUXHALL**	Carlton, Senator (87>93)
508919	**SAAB**	900 (79>93)

Valeo			
508921		**SAAB**	900 (79>93)
508922		**VOLKSWAGEN**	Corrado, Golf I Cabriolet (79>93) Golf II (83>91), Jetta (78>92)
508928		**VOLVO**	850, S70, V70 (96>99)
508932		**JEEP**	Cherokee (77>2001)
508934		**HONDA**	Civic IV, CRX (AF, AS), CRX (EE, ED), CRX (EG EH, Integra (DC)
508935		**HONDA**	Civic V (EJ, EK) (95>2001), CR-V (97>2002) Logo
508936		**HONDA**	Accord IV (89>93), Legend (85>96)
508940		**HONDA**	Prelude IV (91>96)
508951		**MAZDA**	626 (GD), 626 (GE), 626 (GV), MX6
508954		**TOYOTA**	4 Runner (130), Celica (ST18) Hi-Lux (8-9-10), Land Cruiser (BJ70) MR 2 (AW20)
508957		**SUBARU**	Legacy (89>93)
508964		**VAUXHALL**	
508965		**JEEP**	
508966		**FORD**	Mondeo (93>2000)
508967		**FORD**	Cougar, Fiesta (2005>), Focus (2004>) Focus C-Max (03>07), Fusion (2005>) Mondeo (93>2000)
508968		**HYUNDAI**	Excel (89>94), Pony (89>94)
508970		**VOLVO**	740-760-780-940-960
508971		**VOLVO**	850-940-960
509152		**VAUXHALL**	
509219		**PEUGEOT**	106 (91>2003)
509220		**PEUGEOT**	106 (96>2003)
509222		**PEUGEOT**	405 (92>99)
509223		**PEUGEOT**	406 (95>99)
509224		**PEUGEOT**	406 (95>99), Safrane
509225		**PEUGEOT**	406 (95>99)
509226		**PEUGEOT**	406 (99>), 605 (89>99)
509227		**RENAULT**	Mégane (95>)
509228		**RENAULT**	Mégane (95>), Mégane Scénic (96>2003)
509229		**RENAULT**	Mégane Scénic(96>99), R19
509230		**RENAULT**	R21
509231		**RENAULT**	R21
509280		**RENAULT**	Safrane
509281		**RENAULT**	Clio (90>98), Lutecia (Jap)
509282		**RENAULT**	Mégane (95>99)
509283		**RENAULT**	Mégane (95>99), Mégane Scénic (96>99)
509288		**PEUGEOT**	405 (87>92)
509291		**FORD**	Fiesta (95>2002), Puma
509293		**VAUXHALL**	
509340		**RENAULT**	Espace III, Laguna (98>2000)
509344		**FIAT**	Punto II (99>2003)
509351		**CITROËN**	C5 (2001>)
509354		**CITROËN**	C5 (2001>2004)
509355		**RENAULT**	Clio III, Mégane II, Mégane Scénic (99>2003) Scénic II
509356		**CITROËN**	C5 (2001>2004), Xsara (2000>)
509361		**MERCEDES**	E Class (210)
509391		**BMW**	3 series E36, Z3
509392		**BMW**	5 series E39
509393		**BMW**	5 series E39
509394		**BMW**	7 series E38
509395		**BMW**	7 series E38
509396		**MERCEDES**	A Class (168) (97>2003)
509400		**VAUXHALL**	Astra IV (98>), Zafira (99>2003)
509401		**CITROËN**	Xsara (97>2000)
509402		**PEUGEOT**	Partner (96>2002)
509403		**PEUGEOT**	206
509404		**RENAULT**	Clio II (98>), Kangoo (97>), Master (97>2003)
509405		**VAUXHALL**	Corsa (93>2003)
509409		**VAUXHALL**	Corsa II (2000>2003)
509411		**MERCEDES**	A Class (168) (97>2003)
509474		**ALFA ROMEO**	145, 146, 155, Spider
509476		**LANCIA**	Kappa, Lybra, Y (2000>2003)
509477		**VOLKSWAGEN**	Bora, Corrado, Golf II Cabriolet, Golf III Golf IV, LT, New Beetle, Passat (93>97) Polo (94>2001), Sharan (95>), Transporter Vento
509478		**VOLVO**	940-960

Valeo			
509479		**VOLVO**	940-960
509482		**FORD**	Fiesta (95>99), Focus (98>2001), Mondeo
509483		**PEUGEOT**	106, 205, 305, 505, 309, 405, 605
509484		**PEUGEOT**	106, 205, 206, 306, 309, 405, 406, 806 Expert, Partner, Ranch
509485		**VAUXHALL**	Agila, Astra (2004>), Astra IV, Corsa II Meriva, Signum, Sintra, Vectra (95>), Zafira
509486		**MERCEDES**	A Class (168) C Class (202), E Class (210) S Class (140), (220), SLK (96>2003) V Class (638, 2), Viano, Vito
509488		**LANCIA**	Y (95>2003)
509489		**ALFA ROMEO**	156, GTV (95>2003), Spider
509490		**LANCIA**	Kappa, Lybra
509491		**TOYOTA**	4 Runner (180), Avensis, Camry, Carina E Corolla (110), Land Cruiser (BJ80)/(KZ, VZ9) MR 2 (AW20), Paseo (95>99), Previa (R30) Previa (TCR), RAV4, Starlet (EP91)
509492		**TOYOTA**	Corolla (100) (92>97)
509493		**MERCEDES**	A Class (168) (97>2003)
509494		**FIAT**	Doblo (2000>2003), Punto II (99>2003)
509495		**SAAB**	9-3 (98>2003)
509497		**ROVER**	400 (95>)
509498		**ROVER**	200, 25
509499		**LAND ROVER**	Freelander (97>2003)
509500		**RENAULT**	Clio II, Mégane Scénic (99>2003)
509501		**VOLKSWAGEN**	Passat (96>2000)
509502		**FORD**	Focus (2004>), Focus (98>2001)
509503		**FORD**	Ka
509505		**BMW**	5 series E39, X5
509507		**CITROËN**	C2, C3 (2002>)
509508		**CITROËN**	C2, C3 (2002>), Pluriel
509509		**PEUGEOT**	1007
509510		**PEUGEOT**	605, 1007
509511		**CITROËN**	C2, C3 (2002>), Pluriel
509524		**CITROËN**	C5 (2001>2004)
509525		**PEUGEOT**	807, 307(2001>2004)
509527		**MINI**	MINI (2001>)
509528		**LAND ROVER**	Freelander (97>2003)
509529		**MERCEDES**	CLK (209), E Class (211) (2002>), SLR
509536		**RENAULT**	Mégane II
509549		**CHRYSLER**	PT Cruiser
509558		**BMW**	3 series E46, 5 series E39, 7 series E38, X3 Z4
509559		**MERCEDES**	S Class (220)
509560		**MERCEDES**	V Class (638, 2), Vito (96>2003)
509562		**MERCEDES**	Sprinter (95>)
509563		**OPEL**	Vectra B (95>2002)
509564		**VAUXHALL**	Vectra (95>2002)
509565		**OPEL**	Omega B (94>)
509566		**LAND ROVER**	Discovery (98>2004)
509567		**SAAB**	9-5
509568		**VOLVO**	S40, V40
509569		**VOLVO**	S80 (98>2006)
509570		**VOLKSWAGEN**	Transporter (F24) (79>92)
509572		**VOLKSWAGEN**	Bora, Golf IV, Lupo, New Beetle Polo (99>2001)
509573		**VOLKSWAGEN**	Bora, Derby, Golf IV, Golf Plus, Golf V, Lupo New Beetle, Polo (99>)
509581		**VAUXHALL**	Vectra (95>2002)
509582		**OPEL**	Vectra B (95>2002)
509589		**FIAT**	Punto II (99>2003)
509590		**RENAULT**	Twingo (98>)
509591		**VAUXHALL**	Corsa II (2000>2003)
509592		**LANCIA**	Ypsilon (2000>)
509593		**VOLKSWAGEN**	Sharan (2000>2003)
509594		**VOLKSWAGEN**	Fox, Polo (2001>)
509596		**NISSAN**	Micra (K12) (2003>)
509597		**NISSAN**	Micra (K12) (2003>), Note
509598		**NISSAN**	Micra (K12) (2003>), Note
509599		**NISSAN**	Micra (K12) (2003>)
509600		**NISSAN**	Micra (K12) (2003>)
509601		**NISSAN**	Micra (K12) (2003>), Note
509602		**NISSAN**	Micra (K12) (2003>)
509603		**RENAULT**	Mégane II, Scénic II

Valeo		
509604		**RENAULT** Mégane II, Scénic II
509606		**FIAT** Multipla (98>)
509638		**RENAULT** Scénic II
509650		**ROVER** 25 (99>), 400 (95>)
509661		**VOLKSWAGEN** Passat (96>2000)
509662		**VOLKSWAGEN** Bora, Caddy, Golf IV, Golf Plus, Golf V, Lupo New Beetle, Passat (2005>), Polo (99>) Sharan, Touareg , Touran, Transporter (7J 7H)
509664		**FORD** Courrier (91>96), Escort (90>94) Fiesta (89>95), Granada (85>95) Orion (90>93), Scorpio (85>94) Sierra (87>93)
509665		**FORD** Courrier (91>96), Escort (90>2001) Fiesta (89>99), Granada (92>95) Scorpio (92>98)
509667		**FORD** Mondeo (93>2000)
509668		**VAUXHALL** Astra III (91>98), Calibra Cavalier III (88>95), Corsa I, Sintra
509669		**VAUXHALL** Vectra (95>2002)
509672		**VOLKSWAGEN** Corrado, Golf I Cabriolet, Golf II Golf II Cabriolet, Jetta (78>92) Passat (88>93)
509673		**VOLVO** 740-760-780, 940-960
509674		**VOLVO** 850
509677		**FIAT** Stilo (2001>2004)
509678		**FIAT** Marea, Multipla (98>2003)
509679		**BMW** 5 series E39, 7 series E38, M5 E39, X5, Z8
509680		**BMW** 3 series E36, Z3
509681		**BMW** 3 series E36, M3, 5 series E34, M5 7 series E32/E38, 8 series E31, Z3
509682		**VOLKSWAGEN** Fox, Polo (2001>)
509684		**RENAULT** Twingo (93>)
509685		**SMART** Crossblade, Roadster, Smart
509687		**VAUXHALL** Astra III, Calibra, Cavalier III, Combo Corsa I, Omega, Tigra
509688		**VOLKSWAGEN** Sharan (95>2003)
509689		**CITROËN** Saxo (99>)
509690		**LAND ROVER** Range Rover (94>2002)
509691		**VAUXHALL** Astra IV (98>), Zafira (99>2003)
509692		**VAUXHALL** Vectra (2002>)
509693		**VAUXHALL** Vectra (2002>2005)
509695		**FORD** Mondeo (93>2000)
509696		**FORD** Mondeo (2000>)
509701		**RENAULT** Clio II (98>2001), Mégane (98>) Mégane Scénic (99>2003)
509704		**AUDI** A6 (97>2004), A6 Allroad (2000>2005)
509705		**CITROËN** C2, C3 (2002>2005), Pluriel
509706		**FORD** Fiesta (95>2002), Puma
509709		**NISSAN** Almera (2000>2003), Almera Tino (2000>2003)
509712		**VOLKSWAGEN** Passat (2000>)
509714		**FIAT** Punto II (99>)
509716		**MERCEDES** E Class (210)
509717		**MERCEDES** SLK (96>2003)
509718		**RENAULT** Twingo (98>)
509719		**RENAULT** Mégane Scénic (99>2003)
509720		**ROVER** 25 (99>2003)
509721		**ROVER** 400, 45
509727		**RENAULT** Espace IV, Laguna II, Vel Satis
509728		**VOLKSWAGEN** Transporter (F7D) (96>2003)
509729		**VAUXHALL** Astra III (91>98), Carlton, Senator (87>93)
509730		**VAUXHALL** Astra III (91>98)
509731		**OPEL** Astra F (91>98), Calibra, Vectra A (88>95)
509732		**SAAB** 900 (93>), 9-3 (98>2003)
509733		**AUDI** A4 (99>2001), A6 (97>2004)
509775		**RENAULT** Clio III, Modus
509776		**RENAULT** Clio III, Modus
509777		**RENAULT** Modus
509783		**BMW** 1 series E81/E87, 3 series E90
509784		**MERCEDES** A Class (169) (2004>), B Class (2005>)
509790		**VOLKSWAGEN** Eos, Golf Plus (2005>), Golf V (2003>) Golf VI (2008), Jetta (2005>)
509791		**PEUGEOT** 406, 607, Partner, Ranch
509792		**RENAULT** Clio II, Kangoo (2003>)

Valeo		
509793		**RENAULT** Mégane II, Scénic II
509794		**TOYOTA** Avensis, Avensis Verso, Camry, Celica (ZT230) Corolla (120), Corolla Verso Land Cruiser (HD, UZ 10), MR 2 (AW30) Picnic, Previa (R30), Prius, RAV4, Yaris Yaris (KS, NL, SCP90), Yaris (NCP, SCP) JPP Yaris Verso
509795		**PEUGEOT** Boxer (94>2006)
509796		**BMW** 3 series E46
509797		**BMW** 3 series E46
509798		**BMW** 3 series E46, M3 E46, X3 (2003>)
509804		**CITROËN** Berlingo (2002>)
509805		**CITROËN** C2
509851		**PEUGEOT** 307(2001>2004)
509854		**CITROËN** Xsara (97>)
509862		**VAUXHALL** Astra IV (98>)
509863		**TOYOTA** Yaris, Yaris (NCP, SCP) JPP
509864		**BMW** 1 series E87, 3 series E46/E90 5 series E39/E60, 6 series E63/E64 7 series E38/E65/ E66, X3, X5, Z4
509865		**PEUGEOT** 406 (95>)
509867		**MERCEDES** C Class (203), CLK (209), CLS (219) E Class (211), G Class (463), M Class (163) SL (230), SLR
509869		**MERCEDES** A Class (169) (2004>), B Class (2005>)
509885		**RENAULT** Master (97>), Mégane Scénic (96>99)
509886		**RENAULT** Clio II
509890		**DAEWOO** Lanos
509891		**HYUNDAI** Atos, Atos Prime
509892		**HYUNDAI** Accent (99>2004), Santa Fé
509893		**MERCEDES** C Class (203) (2000>), CLK (209), SLK (2004>)
509894		**SAAB** 9-3 (2002>)
509896		**SAAB** 9-3 (2002>)
509898		**DACIA** Logan
509899		**VAUXHALL** Vivaro
509900		**VAUXHALL** Vivaro
509901		**VOLKSWAGEN** Caddy (2004>), Eos, Golf Plus, Golf V Golf VI, Jetta (2005>), Passat (2005>) Tiguan, Touran (2003>)
509907		**AUDI** A4 (2000>), A6 (2001>2004)
509909		**RENAULT** Clio II, Kangoo (2003>)
509913		**PEUGEOT** 207
509914		**RENAULT** Twingo III (2007>)
509916		**BMW** 1 series E81, E87, 3 series E90, X5
509917		**RENAULT** Twingo III (2007>)
509918		**PEUGEOT** 207
509919		**FORD** Focus (2004>), Focus C-Max (03>07)
509920		**ALFA ROMEO** 147 (2000>), 156 (2003>), 166 (2003>)
509921		**RENAULT** Clio II
509922		**DAEWOO** Matiz
509924		**MAZDA** 3, 5
509925		**MAZDA** 6 (2002>), 6 (2005>)
509926		**VOLKSWAGEN** Passat (2005>)
509927		**NISSAN** Almera (2000>)
509928		**NISSAN** Almera (2000>), Almera Tino (2000>)
509929		**OPEL** Corsa C (2000>), Tigra TwinTop (2004>)
509930		**SAAB** 9-3 (98>2003)
509931		**AUDI** A2 (2000>2005)
509933		**ALFA ROMEO** 159, Brera
509934		**MAZDA** 2
509935		**BMW** 1 series E81/E87, 3 series E90
509936		**BMW** 5 series E60, 6 series E63/E64 7 series E65/E66
509937		**CHRYSLER** 300 C
509938		**DACIA** Logan
509941		**FORD** Transit (95>99)
509944		**JAGUAR** S-Type
509945		**KIA** Sorento
509946		**KIA** Carnival
509947		**NISSAN** Primera (P11) (96>2001)
509948		**NISSAN** Almera (95>2000)
509949		**OPEL** Astra H (2004>), Zafira II (2005>)
509951		**OPEL** Meriva
509954		**RENAULT** Master (2003>)

Valeo		
509956		**VOLKSWAGEN** LT II (96>2003)
509957		**NISSAN** Interstar
509959		**PEUGEOT** 207
509961		**RENAULT** Mégane III
509964		**CITROËN** C5 (2001>2004)
509968		**CITROËN** C1
509969		**PEUGEOT** 407
515038		**PEUGEOT** 308
515039		**PEUGEOT** 308
515055		**PEUGEOT** 308
515061		**RENAULT** Mégane III
515064		**AUDI** A3 (2003>2008)
515065		**AUDI** A3 (2003>2008)
515069		**RENAULT** Master (2006>)
515070		**RENAULT** Clio II (98>)
515071		**PEUGEOT** 508
515072		**PEUGEOT** 508
515074		**AUDI** A3 (2003>2008)
515075		**MERCEDES** A Class (168) (97>2003)
515076		**MERCEDES** Sprinter
515077		**ALFA ROMEO** Giulietta
515078		**PEUGEOT** 508
515079		**CITROËN** Berlingo (2002>)
515080		**MERCEDES** V Class (638/2)
515081		**RENAULT** Clio III (2005>)
515082		**CITROËN** Berlingo (96>2002)
515083		**RENAULT** Mégane Scénic (96>99)
515084		**RENAULT** Mégane Scénic (96>99)
515085		**RENAULT** Mégane
515086		**RENAULT** Clio II (2001>)
515087		**RENAULT** Mégane Scénic (96>99)
515088		**LAND ROVER** Freelander (97>2003)
515089		**RENAULT** Mégane (95>99)
515096		**LAND ROVER** Freelander (97>2003)
515124		**PEUGEOT** 508
515126		**SAAB** 9-3 (2002>)
515127		**AUDI** A3 (2003>)
515128		**ALFA** Giulietta (2010>)
515131		**BMW** 5 series E39
515132		**ALFA ROMEO** Giulietta (2010>)
515134		**PEUGEOT** 508
515135		**AUDI** A3 (2003>2008)
515136		**RENAULT** Clio II (98>2001)
515137		**RENAULT** Kangoo (97>2003)
515138		**RENAULT** Trafic
515139		**PEUGEOT** 208, 508
515140		**PEUGEOT** 508
698032		**CITROËN** Xantia
698038		**PEUGEOT** 605 (89>99)
698040		**CITROËN** Xantia (93>2002)
698041		**CITROËN** Xantia (93>97)
698042		**CITROËN** Xantia (93>97)
698044		**PEUGEOT** 306 (93>), Partner (96>2002)
698045		**PEUGEOT** Partner (96>2002), Ranch (96>2002)
698046		**PEUGEOT** 306, Partner (96>2002), Ranch (96>2002)
698052		**RENAULT** Alliance, Encore, R9, R11, Super 5
698057		**RENAULT** R21
698059		**RENAULT** Master (97>2003), Safrane
698080		**VOLKSWAGEN** Caddy (95>2004), Golf II Cabriolet, Golf III Polo (94>99), Vento
698144		**RENAULT** Clio (90>98), Lutecia (Jap), Mégane (95>99) R19
698146		**PEUGEOT** Partner (96>), Ranch (96>2002)
698149		**RENAULT** Mégane (95>99)
698157		**VOLKSWAGEN** Corrado, Golf II, Passat (88>97) Transporter (90>2003)
698159		**VOLKSWAGEN** Caddy (95>2004), Golf II, Golf II Cabriolet Golf III, Lupo, Polo (94>2001), Vento
698160		**VOLKSWAGEN** Vento
698163		**VOLKSWAGEN** Passat (88>97)
698164		**VOLKSWAGEN** Passat (96>2000)
698165		**VAUXHALL** Astra III (91>98), Calibra, Combo
698166		**VAUXHALL** Combo, Corsa I (93>2000), Tigra
698167		**VAUXHALL** Omega

Valeo		
698168		**FORD** Cougar, Mondeo (93>2000)
698169		**MERCEDES** C Class (202), CLK (208), E Class (210) S Class (220), SLK
698170		**BMW** 5 series E34, 7 series E32, M5 E34
698171		**BMW** 3 series E36, M3 E36
698173		**RENAULT** Laguna (94>2000)
698174		**LANCIA** Dedra, Delta (93>99)
698175		**RENAULT** Mégane Scénic (96>2003)
698176		**RENAULT** Mégane Scénic (96>99)
698177		**RENAULT** Mégane Scénic (96>99)
698192		**PEUGEOT** 405 (92>96), 406 (95>)
698193		**PEUGEOT** 405 (87>96), 406 (95>)
698194		**PEUGEOT** 405 (87>96), 406 (95>99)
698195		**PEUGEOT** 106, 405, 406
698196		**ROVER** 200, 25, 400, 45, Streetwise
698197		**LANCIA** Dedra, Lybra
698198		**LANCIA** Y (95>2000)
698199		**SAAB** 9000
698201		**MAZDA** 121 (JA, JB) (96>)
698202		**VAUXHALL** Vectra (95>2002)
698203		**PORSCHE** 911 (996), Boxster (96>2004)
698215		**VOLKSWAGEN** Passat (96>)
698216		**VOLKSWAGEN** Passat (96>)
698217		**MERCEDES** V Class (638, 2), Vito (96>2003)
698218		**MERCEDES** V Class (638, 2), Vito (96>2003)
698235		**PEUGEOT** 405 (92>96)
698244		**MERCEDES** C Class (202) (93>2001), SLK
698246		**BMW** 5 series E39, M5
698247		**VOLKSWAGEN** Sharan (95>)
698253		**RENAULT** Clio II (98>2001)
698255		**RENAULT** Clio II (98>), Kangoo (97>), Mégane (95>)
698262		**VOLKSWAGEN** Bora, Golf III, Golf IV, Jetta (2000>2003) Lupo, New Beetle, Polo (99>2001)
698263		**VOLKSWAGEN** Bora, Golf IV, Jetta (2000>2003), Lupo New Beetle, Polo (99>2001)
698276		**RENAULT** Mégane (95>99)
698277		**RENAULT** Mégane (95>99)
698279		**RENAULT** Mégane Scénic (96>99)
698281		**RENAULT** Mégane (95>99)
698283		**RENAULT** Mégane Scénic (96>2003)
698290		**RENAULT** Avantime, Espace III (96>2002)
698294		**FIAT** Punto (93>99)
698325		**CITROËN** Xantia (93>2002)
698326		**CITROËN** Xsara (97>)
698327		**CITROËN** Xsara (97>2000)
698328		**RENAULT** Clio II (98>2001), Kangoo (97>2003)
698329		**RENAULT** Mégane Scénic (96>2003)
698330		**RENAULT** Mégane Scénic (96>2003)
698364		**RENAULT** Mégane Scénic (96>99)
698381		**MERCEDES** Sprinter (95>)
698382		**MERCEDES** Sprinter (95>)
698383		**MERCEDES** Sprinter (95>)
698384		**MERCEDES** Sprinter (95>)
698385		**MERCEDES** E Class (210)
698393		**VAUXHALL** Vectra (95>2002)
698402		**OPEL** Vectra B (95>2002)
698437		**IVECO TRUCKS** Eurocargo
698438		**IVECO-IRISBUS** My Way
698447		**PEUGEOT** 406 (95>), 607 (2000>)
698448		**PEUGEOT** 406 (99>), 607 (2000>)
698452		**JEEP** Cherokee (77>2001)
698454		**FIAT** Multipla (98>)
698469		**BMW** 3 series E36
698470		**BMW** 7 series E38
698475		**MERCEDES** A Class (168) (97>2003), Vaneo (414)
698487		**FORD** Focus (98>2003), Tourneo Connect Transit Connect
698488		**PEUGEOT** 206
698489		**BMW** 3 series E46, X3
698511		**IVECO TRUCKS** Eurocargo
698512		**RENAULT** Mégane Scénic (99>2003)
698513		**RENAULT** Mégane Scénic (99>2003)
698529		**PEUGEOT** 106 (96>2003)
698533		**FIAT** Doblo (2004>2005), Punto II (99>)

Valeo		
698534	FIAT	Punto II (99>2003)
698535	FIAT	Doblo (2000>2003), Punto II (2003>)
698538	CITROËN	C5 (2001>2004)
698539	CITROËN	C5 (2001>2004)
698540	CITROËN	C5 (2001>2004)
698541	CITROËN	C5 (2001>2004)
698563	OPEL	Corsa C (2000>), Tigra TwinTop (2004>)
698564	OPEL	Corsa C (2000>), Tigra TwinTop (2004>)
698575	CITROËN	Xantia (93>2002)
698594	RENAULT	Laguna II (2001>), Vel Satis (2002>2005)
698606	AUDI	A4 (2000>), A4 Cabriolet (2002>)
698657	PEUGEOT	Partner (96>), Ranch (96>)
698662	VAUXHALL	Astra IV (98>)
698663	VAUXHALL	Zafira (99>)
698664	PEUGEOT	307(2001>), 308, 1007
698675	PEUGEOT	1007
698676	PEUGEOT	1007
698679	VOLKSWAGEN	Passat (2000>)
698680	CITROËN	Xsara Picasso
698681	TOYOTA	RAV4 (2000>), Yaris (NCP, SCP) JPP Yaris Verso
698682	AUDI	A6 (97>2001)
698683	AUDI	A4 (2000>), A6 (97>2004)
698684	AUDI	100, A6 (94>97)
698685	VOLKSWAGEN	Fox, Polo (2001>)
698686	VOLKSWAGEN	Caddy (95>2004), Golf III, Passat (2000>) Polo (94>99), Vento
698687	LANCIA	Delta (93>99)
698688	ALFA ROMEO	166 (98>2003)
698689	FIAT	Brava, Bravo (95>2006), Coupe, Marea
698690	FIAT	Palio, Siena (97>), Strada Pick Up
698691	FIAT	Palio, Siena (97>2001)
698692	FIAT	Stilo (2001>)
698693	MAZDA	2 (2003>)
698694	FORD	Fiesta (2002>), Fusion
698695	FORD	Focus (98>2003), Tourneo Connect Transit Connect
698696	VOLKSWAGEN	Sharan (95>2003)
698697	MERCEDES	C Class (202) (93>2001), CLK (208) E Class (210), SLK
698700	MERCEDES	C Class (203) (2000>), CLK (209)
698701	MERCEDES	C Class (203) (2000>), CLK (209)
698702	MERCEDES	CLS (219), E Class (211) (2002>)
698703	MERCEDES	S Class (140)
698704	MERCEDES	S Class (140)
698705	MERCEDES	S Class (140)
698706	MERCEDES	S Class (140)
698707	NISSAN	Primera (P11) (96>2001) Terrano II (R20) (93>2001)
698708	VAUXHALL	Zafira (99>2003)
698710	VAUXHALL	Combo, Corsa II, Signum, Tigra Twintop Vectra (2002>2005)
698711	VAUXHALL	Combo, Corsa II, Signum, Tigra Twintop Vectra (2002>2005)
698712	VAUXHALL	Sintra
698713	PEUGEOT	607 (2000>)
698714	PEUGEOT	307, 1007
698715	RENAULT	Laguna II (2001>), Vel Satis (2002>)
698716	VOLKSWAGEN	Bora, Golf III, Golf IV, Jetta (2000>2003) Lupo, New Beetle (98>), Polo (94>2001)
698723	SAAB	9-5 (97>)
698724	MINI	MINI (2001>)
698725	MINI	MINI (2001>)
698728	RENAULT	Mégane II
698729	RENAULT	Mégane II
698730	RENAULT	Mégane II
698731	CITROËN	Xsara (97>)
698734	NISSAN	Almera (2000>), Almera Tino (2003>) Primera (P12) (2001>)
698735	HONDA	Civic (EP) (2001>), CR-V (2002>2006), FR-V
698736	RENAULT	Scénic II
698737	RENAULT	Espace IV (2002>)
698738	PEUGEOT	807
698739	VOLKSWAGEN	Fox, Polo (2001>), Polo (2005>)

Valeo		
698740	MERCEDES	CLS (219), E Class (211) (2002>)
698741	MERCEDES	CLS (219), E Class (211) (2002>)
698742	MERCEDES	C Class (203) (2000>2003)
698743	MERCEDES	C Class (203) (2000>)
698744	MERCEDES	A Class (168) (97>2003), Vaneo (414)
698745	JAGUAR	X-Type
698746	VAUXHALL	Omega
698747	ALFA ROMEO	147 (2000>), 156 (2003>), GT
698748	PORSCHE	911 (996), Boxster (96>2004)
698749	PEUGEOT	206
698750	BMW	3 series E46, M3, X3
698751	LANCIA	Thesis
698753	RENAULT	Clio III, Modus, Twingo III
698754	NISSAN	Micra (K12) (2003>)
698755	NISSAN	Micra (K12) (2003>), Note
698762	FORD	Transit (2000>)
698768	VOLKSWAGEN	Touareg (2002>), Transporter (7J, 7H) (2003>)
698769	VOLVO	S40, V40
698770	VOLVO	850, C70, S70, V70 (96>99)
698771	VOLVO	S60, S80, V70, XC 70, XC 90
698772	MERCEDES	CL Class (215), E Class (210), S Class (220)
698773	VAUXHALL	Agila
698774	SMART	Crossblade, Smart
698775	BMW	X5
698776	LAND ROVER	Range Rover (2002>)
698777	MERCEDES	M Class (163)
698778	MERCEDES	M Class (163)
698779	JAGUAR	X-Type
698790	AUDI	A8 (94>2002)
698791	AUDI	A8 (94>2002), S8 (96>2002)
698792	AUDI	A8 (2002>), S8 (2006>2007)
698793	VOLKSWAGEN	Phaeton (2002>)
698794	VOLKSWAGEN	Transporter (90>2003)
698795	TOYOTA	Avensis (2003>), Corolla (120) (2001>) Corolla Verso (2001>2003)
698796	TOYOTA	Avensis Verso (2001>), Celica (ZT230) Land Cruiser, Previa (R30), Prius, Yaris
698797	MERCEDES	S Class (140)
698799	LAND ROVER	Freelander (97>2003)
698800	VOLKSWAGEN	Caddy (2004>), Eos, Golf Plus, Golf V Golf VI, Passat (2005>), Touran (2003>)
698801	VOLKSWAGEN	Caddy (2004>), Eos, Golf Plus, Golf V Golf VI, Jetta (2005>), Passat (2005>) Touran (2003>)
698802	MITSUBISHI	Colt VI (2004>)
698803	VAUXHALL	Vectra (2002>2005)
698804	OPEL	Signum, Signum B (2005>), Vectra C (2002>)
698805	VAUXHALL	Vectra (2002>2005)
698806	SAAB	9-3 (2002>)
698807	SAAB	9-3 (2002>)
698808	SAAB	9-3 (2002>)
698809	VOLKSWAGEN	Caddy (2004>), Eos, Golf Plus, Golf V Golf VI,Jetta (2005>), Passat (2005>) Tiguan, Touran (2003>)
698810	VOLKSWAGEN	Caddy (2004>), Eos, Golf Plus, Golf V,Golf VI Jetta (2005>), Passat (2005>) Touran (2003>)
698811	VOLKSWAGEN	Eos, Golf V, Jetta (2005>), Passat (2005>) Touran
698812	VOLKSWAGEN	Golf Plus, Golf V, Touran (2003>)
698813	AUDI	A4 (2000>), A4 Cabriolet (2002>)
698814	AUDI	A4 (2000>), A4 Cabriolet (2002>)
698815	PEUGEOT	605 (94>99)
698816	RENAULT	Scénic II
698817	LAND ROVER	Freelander (97>2003)
698819	ROVER	400, 45
698838	BMW	7 series E38
698839	FIAT	Doblo (2000>), Punto II (2003>)
698840	MERCEDES	Sprinter (95>)
698841	MERCEDES	A Class (168) (97>2003)
698853	DAF	45
698856	BMW	7 series E65/E66
698857	BMW	7 series E65/E66
698858	PEUGEOT	Boxer (94>2006)

Valeo			
698859		DAEWOO	Leganza
698860		DAEWOO	Nubira (97>99)
698861		BMW	Z4
698862		BMW	Z4
698863		BMW	5 series E60/61 LCI, 6 series E63/E64
698864		BMW	5 series E60/61 LCI, 6 series E63/E64
698865		CHRYSLER	Voyager (2001>)
698866		FIAT	Panda (2003>)
698867		LANCIA	Musa, Ypsilon (2000>)
698868		HONDA	Accord VIII (2003>)
698869		NISSAN	X-Trail (2001>)
698870		MAZDA	6 (2002>)
698871		MERCEDES	Viano, Vito (2003>)
698872		MERCEDES	Viano, Vito (2003>)
698873		NISSAN	Maxima QX (A33)
698874		VAUXHALL	Astra (2004>)
698875		VAUXHALL	Astra (2004>)
698876		VAUXHALL	Meriva
698877		VAUXHALL	Meriva
698878		RENAULT	Twingo (93>)
698879		ROVER	75 (99>2003)
698880		ROVER	75 (99>)
698882		FORD	Focus C-Max (03>07), Galaxy CA1 (2006>) S-Max
698883		FORD	Focus C-Max (03>07), Galaxy CA1 (2006>) S-Max
698884		PEUGEOT	407
698885		VOLKSWAGEN	Bora, Caddy (95>2004), Golf III, Golf IV Lupo, New Beetle, Polo (94>2001), Vento
698886		HONDA	Jazz (2002>)
698888		KIA	Magentis (2001>2005)
698889		KIA	Amanti (USA)
698890		MAZDA	323 (BJ), 626 (GF), Premacy (99>)
698891		MAZDA	323 (BJ), 626 (GF), Premacy (2001>)
698892		MAZDA	3
698893		MAZDA	Tribute
698894		SUZUKI	Grand Vitara
698895		KIA	Cerato
699003		RENAULT	Clio (90>98), Espace III (96>2000) Laguna (94>98)
699013		VOLKSWAGEN	Corrado, Golf III (91>97), Passat (88>97) Vento
699036		RENAULT	Mégane (95>99)
699039		RENAULT	Clio (90>98), Lutecia (Jap)
699045		RENAULT	Mégane (95>99), Mégane Scénic (96>99)
699047		FORD	Mondeo (93>2000)
699048		FORD	Mondeo (93>2000)
699051		BMW	3 series E36, M3, 5 series E34, Z3
699057		RENAULT	Safrane
699059		RENAULT	Clio (90>2001), Kangoo (97>), Twingo (93>)
699070		VAUXHALL	Calibra, Cavalier III, Frontera (91>98)
699071		VAUXHALL	Astra III, Calibra, Cavalier III
699072		VAUXHALL	Combo, Corsa I (93>2000), Tigra
699073		OPEL	Omega A (86>94), Senator B (87>93)
699075		LANCIA	Dedra, Delta (93>99)
699076		LANCIA	Dedra, Delta (93>99)
699077		VAUXHALL	Omega
699078		FORD	Courrier (91>96), Fiesta (89>95)
699079		RENAULT	Espace III (96>2000), Laguna (94>2000)
699088		RENAULT	Espace III (96>2002), Laguna (98>2000)
699092		RENAULT	Laguna (98>2000)
699093		RENAULT	Mégane (95>99)
699094		RENAULT	Mégane (95>99), Mégane Scénic (96>99)
699101		LANCIA	Thema
699102		VAUXHALL	Vectra (95>2002)
699105		MERCEDES	200, 300 (124), CLK (208), E Class (124) SL (129), Sprinter, V Class (638, 2), Vito
699107		RENAULT	Clio II (98>2001), Kangoo (97>2003)
699109		ROVER	200, 25, 400
699114		ALFA ROMEO	164 (92>98)
699115		VOLKSWAGEN	Caddy (95>2004), Golf II Cabriolet, Golf III Passat (93>97), Polo (94>99) Sharan (95>2000), Vento
699119		FORD	Escort (90>94), Escort (95>2001)

Valeo			
699119		FORD	Orion (90>93)
699120		FORD	Galaxy (95>2000), Granada, Scorpio
699127		FORD	Galaxy (2000>), Galaxy (95>2000) Transit (2000>)
699128		FORD	Cougar, Mondeo (93>2000)
699143		RENAULT	Espace III, Master (97>), Mégane (95>) Mégane Scénic (96>2003), Trafic (2001>)
699144		RENAULT	Clio II, Kangoo (97>2003)
699145		CHRYSLER	Voyager (91>2001)
699147		LANCIA	Dedra, Delta (93>99)
699148		LAND ROVER	Range Rover (94>2002)
699155		PEUGEOT	406 (95>)
699161		VOLKSWAGEN	LT (96>), Transporter (F7D) (96>2003)
699166		VOLVO	S40, V40
699174		LANCIA	Kappa, Thesis
699175		ALFA ROMEO	145, 146, 147, 156, 166, GTV, Spider
699190		PEUGEOT	206
699191		RENAULT	Clio II (98>), Kangoo (97>)
699193		VOLKSWAGEN	Transporter (F7D) (96>2003)
699197		RENAULT	Mégane (98>), Mégane Scénic (99>2003)
699199		PEUGEOT	206, 807, 406, 607, 806, Expert
699201		ALFA ROMEO	145, 156, 166, GTV
699202		RENAULT	Clio II (98>2001)
699205		FORD	Scorpio (94>98)
699209		FORD	Mondeo (93>2000)
699212		FIAT	Cinquecento, Seicento
699216		PEUGEOT	206
699218		RENAULT	Clio II (98>), Kangoo (97>)
699221		RENAULT	Clio II (98>2001)
699222		VOLKSWAGEN	Passat (96>2000)
699234		RENAULT	Clio II, Kangoo (2003>), Twingo
699236		PEUGEOT	206, 306, 406, 605, 607, 806, Boxer, Expert Expert II , Partner (96>2002) Ranch (96>2002)
699237		PEUGEOT	106 (96>2003), Partner (96>2002)
699239		RENAULT	Clio II
699240		RENAULT	Avantime, Laguna II (2001>) Vel Satis (2002>2005)
699241		RENAULT	Laguna II (2001>)
699246		RENAULT	Mégane II
699250		VAUXHALL	Astra IV (98>)
699251		VAUXHALL	Astra IV (98>)
699260		VOLVO	C70, S70, V70 (96>99)
699261		VOLVO	C70, S70, V70 (96>99)
699262		VOLVO	S60, S80 (98>2006), V70 (2000>)
699263		VOLVO	S80 (98>2006)
699264		VOLVO	S60, S80, V70 (2000>), XC 70
699270		OPEL	Astra G, Combo, Corsa C, Meriva Tigra TwinTop
699272		PEUGEOT	807, 307(2001>2004), 406, 607 Partner (2002>), Ranch (2002>)
699275		VOLKSWAGEN	Passat (96>)
699279		FIAT	Marea
699280		LANCIA	Y (95>2000)
699281		LANCIA	Lybra
699283		FIAT	Albea, Brava/o, Palio, Punto II (99>2003) Siena (2002>)
699284		FIAT	Barchetta, Brava/o, Doblo (2000>), Marea Palio, Punto II, Strada Pick Up
699286		LANCIA	Y (95>2000)
699287		FIAT	Punto (93>99)
699288		FIAT	Palio, Punto (93>99), Siena (97>2001)
699289		LANCIA	Dedra, Delta (93>99)
699290		LANCIA	Y (95>2000)
699296		HONDA	Accord Aerodeck, Accord coupe, Accord IV Accord V
699298		MERCEDES	CLK (208), E Class (210), G Class (463) M Class (163), S Class (140), SLK, Sprinter V Class (638, 2), Vito
699299		MERCEDES	C Class (202) (93>2001), CLK (208)
699300		MERCEDES	A Class (168) (97>2003)
699301		VAUXHALL	Zafira (99>)
699303		VOLKSWAGEN	Lupo, Polo (99>2001)
699306		VAUXHALL	Corsa II (2000>)

Valeo			
699307		VAUXHALL	Astra IV, Vectra (95>2002), Zafira (99>)
699310		JEEP	Cherokee (77>2001), Grand Cherokee (93>99)
699311		FIAT	Stilo (2001>)
699314		ROVER	200, 25, 400, 45, Streetwise
699315		ROVER	400, 45
699316		SAAB	9-3 (98>2003)
699317		VAUXHALL	Signum B (2005>), Vectra (2002>2005)
699318		VAUXHALL	Signum (2003>2005), Vectra (2002>2005)
699320		BMW	5 series E39, 7 series E38
699321		BMW	5 series E39, M5, 7 series E38, Z8
699322		BMW	3 series E36
699323		BMW	5 series E39, 7 series E38
699325		HONDA	Accord Aerodeck, Accord coupe, Accord VII
699326		FORD	Cougar, Fiesta, Focus, Fusion Mondeo (93>2000), Tourneo, Transit
699327		FORD	Mondeo (2000>), Transit (2000>)
699328		FORD	Mondeo (2000>)
699330		MAZDA	121 (JA, JB) (96>)
699336		FORD	Mondeo (2000>)
699337		FORD	Transit (2000>)
699345		MITSUBISHI	Carisma (95>)
699346		SAAB	9-5 (2001>2004)
699347		ROVER	75 (99>)
699348		SAAB	9-3 (2002>)
699349		PEUGEOT	407
699351		PEUGEOT	407, 607 (2004>)
699355		VAUXHALL	Signum, Vectra (2002>)
699357		VOLKSWAGEN	Caddy (2004>), Eos, Golf Plus, Golf V Jetta (2005>), Passat (2005>) Touran (2003>)
699358		PEUGEOT	206, 307 (2001>2004)
699366		SCANIA	113, 114, 124, 144, P, R, T
699368		FIAT OPEL VAUXHALL	Croma II (2005>) Signum,Vectra C (2002>2005) Signum,Vectra (2002>2005)
699373		FIAT	Doblo (2000>), Marea, Stilo (2001>)
699374		FIAT	Stilo (2001>)
699376		VOLKSWAGEN	Passat (96>2004)
699380		AUDI	A4 (2000>2004)
699381		AUDI	A4 (2000>2004), A4 Cabriolet (2002>)
699383		VOLKSWAGEN	Bora, Fox, Golf IV (97>2003), Lupo Polo (2001>)
699391		LANCIA	Lybra
699392		TOYOTA	Aygo
699393		TOYOTA	Aygo
699405		OPEL	Astra G (98>)
699501		RENAULT	R21
699502		RENAULT	Safrane
699504		RENAULT	R19
699505		RENAULT	R25
699506		RENAULT	Safrane
699507		ALFA ROMEO	155
699512		VOLKSWAGEN	Transporter (90>2003)
699513		VOLKSWAGEN	Corrado, Golf III (91>97), Passat (88>97) Vento
699514		VOLKSWAGEN	Corrado
699515		VOLKSWAGEN	Polo (94>99)
699517		VOLKSWAGEN	Corrado
699518		CITROËN	BX
699520		PEUGEOT	405 (92>96), 605 (94>99), Boxer (94>2001)
699522		PEUGEOT	306 (93>97), Partner (96>2002)
699523		CITROËN	XM (94>2001)
699524		CITROËN	ZX
699525		PEUGEOT	605 (89>99)
699526		PEUGEOT	106, 306, Partner, Ranch
699528		PEUGEOT	Boxer (94>2001)
699533		RENAULT	Clio (90>98)
699534		RENAULT	Safrane
699536		RENAULT	Mégane (95>99)
699537		RENAULT	Twingo (93>98)
699538		RENAULT	Clio (90>98)
699539		RENAULT	Clio (90>98), Lutecia (Jap)
699540		RENAULT	Laguna (94>98)
699543		RENAULT	Safrane

Valeo			
699545		RENAULT	Mégane (95>99), Mégane Scénic (96>99)
699546		BMW	3 series E36, Z3
699547		FORD	Mondeo (93>2000)
699548		FORD	Mondeo (93>2000)
699551		BMW	3 series E36, 5 series E34, M3 E36, Z3
699552		MERCEDES	190 (201), 200, 300 (124), E Class (124) S Class (126)
699557		RENAULT	Safrane
699559		RENAULT	Clio (90>2001), Kangoo (97>), Twingo (93>)
699566		OPEL	Calibra, Vectra A (88>95)
699568		LANCIA	Dedra
699570		VAUXHALL	Calibra, Cavalier III (88>95) Frontera (91>98)
699571		VAUXHALL	Astra III (91>98), Calibra Cavalier III (88>95)
699572		VAUXHALL	Combo, Corsa I (93>2000), Tigra
699573		OPEL	Omega A (86>94), Senator B (87>93)
699574		VAUXHALL	Carlton, Senator (87>93)
699575		LANCIA	Dedra, Delta (93>99)
699577		VAUXHALL	Omega
699579		RENAULT	Espace III (96>2000), Laguna (94>2000)
699581		ALFA ROMEO	155, 164 (87>92)
699588		RENAULT	Espace III (96>2002), Laguna (98>2000)
699589		RENAULT	Safrane
699592		RENAULT	Laguna (98>2000)
699593		RENAULT	Mégane (95>99)
699594		RENAULT	Mégane (95>99), Mégane Scénic (96>99)
699596		RENAULT	Espace III (2000>2002)
699597		SAAB	9000
699598		FIAT	Croma (85>90)
699599		LANCIA	Thema
699602		VAUXHALL	Vectra (95>2002)
699604		MERCEDES	200, 300 (124), E Class (124), G Class (463)
699605		MERCEDES	200, 300 (124), CLK (208), E Class (124) SL (129), Sprinter, V Class (638, 2), Vito
699606		PEUGEOT	807, 406, 605, 607
699607		RENAULT	Clio II (98>2001), Kangoo (97>2003)
699609		ROVER	200, 25, 400
699611		ALFA ROMEO	155
699615		VOLKSWAGEN	Caddy (95>2004), Golf II Cabriolet, Golf III Passat (93>97), Polo (94>99) Sharan (95>2000), Vento
699618		RENAULT	Clio (90>98)
699619		FORD	Escort (90>2001), Orion (90>93)
699620		FORD	Galaxy (95>2000), Granada (92>95) Scorpio (92>98)
699624		CHRYSLER	Voyager (83>95)
699627		FORD	Galaxy (95>), Transit (2000>)
699628		FORD	Cougar, Mondeo (93>2000)
699635		LAND ROVER	Discovery (89>98)
699641		VOLVO	440-460-480
699643		RENAULT	Espace III, Master (97>), Mégane (95>99) Mégane Scénic (96>2003), Trafic (2001>)
699644		RENAULT	Clio II, Kangoo (97>2003)
699646		ALFA ROMEO	164 (92>98)
699648		LAND ROVER	Range Rover (94>2002)
699650		BMW	7 series E38
699652		VOLKSWAGEN	Transporter (90>2003)
699653		BMW	5 series E34, 7 series E32, 8 series E31
699655		PEUGEOT	406 (95>)
699657		RENAULT	Mégane (95>99), Mégane Scénic (96>99)
699660		RENAULT	Safrane
699661		VOLKSWAGEN	LT (96>), Transporter (F7D) (96>2003)
699666		VOLVO	S40, V40
699671		FORD	Escort (90>94), Orion (90>93)
699674		LANCIA	Kappa, Thesis
699675		ALFA ROMEO	145, 146, 147, 156, 166, GTV, Spider
699688		MERCEDES	200, 300 (124), E Class (124), S Class (126)
699690		PEUGEOT	206
699691		RENAULT	Clio II (98>), Kangoo (97>)
699693		VOLKSWAGEN	LT(96>), Transporter (96>2003)
699695		OPEL	Omega A (86>94)
699697		RENAULT	Mégane (98>), Mégane Scénic (99>2003)
699698		VOLKSWAGEN	Vento

Valeo			
699699		PEUGEOT	206, 807, 406, 607, 806, Expert, Expert II
699701		ALFA ROMEO	145, 156, 166, GTV
699714		VOLVO	740-760-780
699715		FIAT	Marengo (159) (89>93), Tempra, Tipo
699716		PEUGEOT	206
699718		RENAULT	Clio II (98>), Kangoo (97>)
699720		ROVER	200, 25, 400, 45, 600
699721		RENAULT	Clio II (98>2001)
699722		VOLKSWAGEN	Passat (96>2000)
699727		AUDI	80, 100, A6 (94>97), A8, Cabriolet, Coupé
699734		RENAULT	Clio II, Kangoo (2003>), Twingo
699735		OPEL	Sintra
699736		PEUGEOT	206, 306, 406, 605, 607, 806, Boxer, Exper Partner (96>2002), Ranch (96>2002)
699737		PEUGEOT	106 (96>2003), Partner (96>2002)
699738		CITROËN	Xsara (2000>)
699739		RENAULT	Clio II
699740		RENAULT	Avantime, Laguna II, Vel Satis (2002>2005)
699741		RENAULT	Laguna II (2001>)
699743		OPEL	Omega B (94>)
699745		OPEL	Omega B (94>)
699746		RENAULT	Mégane II
699748		VAUXHALL	Agila, Corsa I (93>2000)
699749		OPEL	Astra G (98>)
699750		VAUXHALL	Astra IV (98>)
699751		VAUXHALL	Astra IV (98>)
699752		OPEL	Astra G (98>)
699753		VOLVO	850
699766		RENAULT	Mégane II
699767		VAUXHALL	Omega
699768		OPEL	Campo (88>96)
699769		OPEL	Zafira (98>2003)
699770		OPEL	Astra G, Combo Tour (2002>), Corsa C, Meriva Tigra TwinTop
699771		VAUXHALL	Agila
699772		PEUGEOT	307 (2001>2004), 406, 607, 807 Partner (2002>), Ranch (2002>)
699775		VOLKSWAGEN	Passat (96>)
699798		MERCEDES	CLK (208), E Class (210), G Class (463) M Class (163), S Class (140), SLK, Sprinter V Class (638, 2), Vito
699800		MERCEDES	Vaneo (414)
699803		SEAT	Arosa,Cordoba (99>2002) Ibiza (99>2001)
		VOLKSWAGEN	Lupo,Polo (99>2001)
699806		VAUXHALL	Combo (2002>), Corsa II (2000>), Meriva
699807		VAUXHALL	Astra IV (98>), Vectra (95>2002) Zafira (99>)
699817		VAUXHALL	Signum B (2005>), Vectra (2002>2005)
699818		VAUXHALL	Signum (2003>2005), Vectra (2002>2005)
699823		BMW	5 series E39, 7 series E38
699824		VAUXHALL	Zafira (99>)
699826		FORD	Cougar, Fiesta (99>), Focus, Fusion Mondeo (93>2000), Tourneo Connect, Transit Transit Connect
699827		FORD	Mondeo (2000>), Transit (2000>)
699828		FORD	Mondeo (2000>)
699830		MAZDA	121 (JA, JB) (96>)
699834		FORD	Fiesta (95>99)
699836		FORD	Mondeo (2000>2003)
699837		FORD	Transit (2000>)
699840		FORD	Cougar
699848		SAAB	9-3 (2002>)
699855		VAUXHALL	Signum (2003>2005), Vectra (2002>2005)
699857		AUDI	A3 (2003>)
699858		PEUGEOT	206
699859		PEUGEOT	307 (2001>2005)
699860		RENAULT	Espace IV (2002>2006)
699862		VAUXHALL	Astra (2004>)
699867		OPEL	Agila
699868		VAUXHALL	Signum, Vectra (2002)
699870		OPEL	Astra G (98>)
699876		AUDI	A4 (94>2000),A6 (97>2004)
		SKODA	Superb (2001>2008)

Valeo			
699876		VOLKSWAGEN	Passat (96>2005)
699880		AUDI	A4 (2000>2004) A6 (2001>2004) A8 (94>2002)
699883		SEAT	Cordoba (2002>),Ibiza (2001>)
		SKODA	Fabia,Roomster (2006>)
		VOLKSWAGEN	Bora,Fox Golf IV (97>2003) Polo (2001>)
699893		TOYOTA	Aygo
699894		OPEL	Omega B (94>)
699896		OPEL	Vectra B (95>2002)
699897		OPEL	Zafira (98>)
699898		OPEL	Astra G (98>), Corsa C (2000>)
699899		VAUXHALL	Astra IV (98>)
699900		OPEL	Astra G (98>)
699912		VAUXHALL	Combo (2002>), Corsa II, Tigra Twintop
699914		DACIA	Logan
701000		PEUGEOT	508
701001		AUDI	A3 (2003>),Q3 S3 (2006>),TT II (2006>)
		SEAT	Alhambra III,Altea,Leon (2005>)
		SKODA	Octavia (2004>),Superb (2008>) Yeti
		VOLKSWAGEN	Caddy IV (2010>) Eos,Golf Plus Golf V,Golf VI,Golf VI Cabriolet Jetta (2005>) New Beetle (2011>) Passat (2005>) Passat CC,Scirocco,Sharan Tiguan,Touran,Touran Heros
701002		CITROËN	C5 (2004>2008),C6 (2005>2008)
		PEUGEOT	407,407 Coupé
701003		ABARTH	Grande Punto,Punto Evo
		ALFA ROMEO	MiTo
		FIAT	Fiorino,Grande Punto Punto Evo (2009>),Qubo
		OPEL	Corsa D (2006>)
		VAUXHALL	Corsa III (2006>)
701004		FORD	Fiesta (2002>2008),Fusion
701005		FORD	Focus (98>2004) Tourneo Connect Transit Connect
701006		RENAULT	Mégane III
701007		CITROËN	C3 (2009>),DS3
		PEUGEOT	207, 208
701008		OPEL	Astra G (98>2004),Zafira (98>)
		VAUXHALL	Astra IV (98>2004) Zafira
701009		AUDI	A2
		MERCEDES	G Class (W461/463)
		SEAT	Cordoba (2002>) Ibiza (2001>2011)
		SKODA	Fabia (99>2010) Felicia (94>2001),Roomster
		VOLKSWAGEN	Fox,Polo (2001>)
701010		CADILLAC	BLS
		FIAT	Croma II (2005>)
		OPEL	Combo (2001>) Corsa C (2000>2006) Signum Tigra Twin Top (2004>) Vectra C (2002>)
		SAAB	9-3 (2002>),9-3 Cabriolet
		VAUXHALL	Combo (2001>) Corsa II (2000>2006) Signum,Tigra Twin Top Vectra (2002>)
701011		FORD	Focus II (2004>2011),Turnier
701012		RENAULT	Grand Scénic,Scénic III
701013		CITROËN	C8,Jumpy
		FIAT	Scudo (2004>2006)

Valeo		
701013	**FIAT**	Ulysse (2002>)
	LANCIA	Phedra
	PEUGEOT	807,Expert (2004>2006)
701014	**CITROËN**	C2,C3,C3 Picasso,C3 Pluriel
		C4,C4 II,DS4
	PEUGEOT	308,1007
		307 (2001>),RCZ
701015	**RENAULT**	Laguna II,Vel Satis
701016	**AUDI**	S3 (98>2003),TT (98>2006)
	SEAT	Arosa,Leon (99>2005)
	SKODA	Octavia
	VOLKSWAGEN	Bora,Golf IV,Lupo,
		New Beetle (98>)
		Polo (99>2001)
701017	**ALFA ROMEO**	147 (2000>),156 (2003>),GT
701018	**NISSAN**	Kubistar
	RENAULT	Clio Campus Evolution
		Clio I,Clio II
		Kangoo (97>2007)
		Mégane (95>2002),Thalia
701019	**BMW**	1 Serie (2012>),3 Serie (2012)
701020	**AUDI**	A3 (2012>)
	VOLKSWAGEN	Golf VII
701021	**DAIHATSU**	Charade
	LEXUS	CT 200h (2010>)
		GS (2005>),GX 460
		IS (2005>),LFA
		LS 460 (2006>),LX 570
		RX350/450H
	SUBARU	Legacy,Outback,Trezia
	TOYOTA	Alphard II,Auris,Avalon,Avensis
		Camry,Corolla X
		Highlander II,Hilux
		Land Cruiser,Prado
		RAV4 II (2006>)
		Tundra,Urban Cruiser
		Verso,Verso-S,Yaris II,Yaris III
701023	**AUDI**	A4 (2000>2007)
		A4 Cabriolet (2002>)
		A4 Cabriolet II (2006>)
		A6 (97>2004)
		A6 Allroad (2000>2006)
		RS4 Quattro V8 FSi (2005>)
		RS6 Quattro
		S4 Cabriolet II (2004>)
		S4 V8 (2003>)
		S6 (99>2005)
	SEAT	Exeo
715007	**BMW**	5 series E39, M5, X5
715009	**FORD**	Ka
715010	**FORD**	Ka
715014	**FORD**	Courrier (91>96), Fiesta (89>95)
715016	**FORD**	Focus (98>2001)
715017	**FORD**	Focus (98>2001)
715018	**FORD**	Granada, Scorpio, Sierra
715021	**FORD**	Scorpio (94>98)
715022	**FORD**	Scorpio (94>98)
715023	**FORD**	Transit (95>)
715027	**FORD**	Fiesta (95>2002), Ka, Puma
715028	**VOLKSWAGEN**	Sharan (2000>)
715031	**MERCEDES**	E Class (210)
715032	**MERCEDES**	E Class (210)
715033	**MERCEDES**	E Class (210)
715034	**OPEL**	Corsa B
715036	**OPEL**	Astra F (91>98), Astra G (98>2004)
715040	**VOLKSWAGEN**	Golf I (74>83)
715048	**BMW**	1 series E81/E87
715049	**BMW**	1 series E81/E87
715051	**MERCEDES**	A Class (169) (2004>)
715052	**MERCEDES**	A Class (169) (2004>)
715053	**CITROËN**	Berlingo (2002>)
715056	**RENAULT**	Clio III (2005>)
715057	**DACIA**	Logan
715058	**DACIA**	Logan

Valeo		
715059	**NISSAN**	Primastar (2002>)
715060	**NISSAN**	Primastar (2002>)
715061	**SAAB**	9-5 (2001>)
715063	**PEUGEOT**	207
715065	**RENAULT**	Mégane III
715066	**RENAULT**	Twingo (2007>)
715067	**CITROËN**	C1
715068	**CITROËN**	C1
715069	**CITROËN**	C1
715071	**RENAULT**	Modus (2004>2007)
715072	**MINI**	MINI (R56) (2006>)
715073	**MINI**	MINI (R56) (2006>)
715074	**MINI**	MINI (R56) (2006>)
715075	**MINI**	MINI (R56) (2006>)
715221	**CITROËN**	C1
715222	**PEUGEOT**	308
715223	**PEUGEOT**	308
715224	**OPEL**	Corsa C
715226	**VAUXHALL**	Corsa II (2003>)
715227	**CITROËN**	Berlingo (2002>)
715229	**RENAULT**	Clio II (2001>)
715230	**LAND ROVER**	Freelander (97>2003)
715231	**RENAULT**	Clio II (2001>)
715232	**RENAULT**	Clio II (2001>)
715233	**RENAULT**	Clio II (2001>)
715239	**FORD**	Galaxy (95>2006)
715240	**AUDI**	A2 (2000>2005)
715243	**RENAULT**	Laguna II (2001>)
715245	**FORD**	Focus II (2007>)
715246	**VOLKSWAGEN**	LT II (96>2003)
715247	**MERCEDES**	SLK (R171)
715248	**ALFA ROMEO**	Giulietta
715249	**ALFA ROMEO**	Giulietta
715260	**HYUNDAI**	i30
715261	**HYUNDAI**	Accent/Getz
715262	**HYUNDAI**	Accent (2005>)
715263	**KIA**	Picanto
715264	**KIA**	Picanto
715500	**AUDI**	A6 (2004>)
715501	**AUDI**	A6 (2004>)
715502	**BMW**	1 series E81
715503	**BMW**	1 series E87
715504	**JAGUAR**	Sovereign
715505	**JAGUAR**	S-Type (98>2003)
715506	**MERCEDES**	A Class (169) (2004>)
715507	**MERCEDES**	A Class (169) (2004>)
715508	**MERCEDES**	SLK (R171)
715509	**MITSUBISHI**	Montero II
715510	**FORD**	Focus II (2004>)
715511	**FORD**	Focus II (2004>)
715512	**VOLVO**	S60
715513	**NISSAN**	Primastar
715514	**SAAB**	9-3 (98>2002)
715515	**CITROËN**	C1
715516	**HYUNDAI**	Accent (99>2003)
715517	**HYUNDAI**	Coupé (2002>)
715518	**LAND ROVER**	Discovery
715519	**LAND ROVER**	Discovery
715520	**NISSAN**	Frontier
715521	**HYUNDAI**	Genesis
715522	**KIA**	Carens II (2002>2006)
715523	**KIA**	Clarus
715524	**HYUNDAI**	i 10
715525	**HYUNDAI**	Getz
715526	**CHEVROLET**	Lacetti
715527	**HYUNDAI**	Terracan (HP) (2001>)
715528	**MITSUBISHI**	Galant (1996>)
715529	**HYUNDAI**	Santa Fe
715530	**CITROËN**	Evasion (94>98)
715531	**MAYBACH**	57/62 (240)
715532	**ALFA ROMEO**	159
715533	**ALFA ROMEO**	159
715534	**CHRYSLER**	PT Cruiser
715535	**CHEVROLET**	Aveo

Valeo			
715536		**CHEVROLET**	Rezzo
715537		**DODGE**	Caliber
715538		**NISSAN**	Kubistar
715539		**RENAULT**	Mégane II
715540		**HONDA**	Civic (2006>)
715541		**HYUNDAI**	Santa Fe II
715542		**LEXUS**	GS (97>2000)
715543		**MITSUBISHI**	Colt V (CJ)
715544		**MERCEDES**	GL Class (164)
715545		**MITSUBISHI**	Pajero Pinin (99>)
715546		**MITSUBISHI**	Airtrek I
715547		**MITSUBISHI**	Space Runner
715548		**MITSUBISHI**	Carisma
715549		**NISSAN**	Micra (K11)
715551		**SUBARU**	Impreza (GD, GG)
715552		**ABARTH**	Grande Punto
715553		**ABARTH**	Grande Punto
715554		**CITROËN**	C4 Picasso
715555		**CITROËN**	C4 Picasso
715556		**CITROËN**	C3 (2009>)
715557		**CITROËN**	C3 (2009>)
715558		**CITROËN**	C8
715559		**NISSAN**	Dualis
715560		**INFINITI**	FX 35 /45
715561		**INFINITI**	G20
715562		**RENAULT**	Espace IV (2002>)
715563		**SUBARU**	Legacy (98>2003)
715564		**SUZUKI**	Grand Vitara II
715565		**TOYOTA**	Corolla (110) (97>99)
715566		**SSANGYONG**	Korando
715567		**SSANGYONG**	Korando
715568		**RENAULT**	Avantime
715569		**ISUZU**	Trooper (2000>)
715570		**CITROËN**	C5 (2004>2008)
715571		**VOLVO**	S60
715572		**TOYOTA**	Avensis (T22)
715573		**HONDA**	Accord VII (98>2003)
715574		**MAZDA**	MPV (99>)
715575		**NISSAN**	Almera (95>2000)
715576		**MAZDA**	Demio
715577		**MERCEDES**	V Class (638)
715578		**AUDI**	80 (91>95)
715579		**AUDI**	A4 (2007>)
715580		**AUDI**	A4 (2007>)
715581		**AUDI**	Q7
715582		**BMW**	7 series E65/E66
715583		**BMW**	X5 E70
715584		**BMW**	X5 E70
715585		**MINI**	Mini (2006>)
715586		**MINI**	Mini (2006>)
715587		**CHEVROLET**	Epica
715588		**CHEVROLET**	Matiz
715589		**CITROËN**	Saxo (96>99)
715590		**DAIHATSU**	Cuore VII
715591		**HYUNDAI**	Elantra (2000>)
715592		**HYUNDAI**	Accent (2005>)
715593		**HONDA**	Accord VII Coupe (97>)
715594		**HONDA**	HR-V
715595		**IVECO**	Daily (2006>)
715597		**LAND ROVER**	Freelander
715598		**LAND ROVER**	Range Rover (94>2002)
715599		**MAZDA**	323 (BJ) (98>2000)
715600		**MERCEDES**	C Class (204)
715601		**MERCEDES**	Sprinter II
715602		**MERCEDES**	Sprinter II
715603		**MITSUBISHI**	Colt VI (2004>)
715607		**RENAULT**	Laguna III (2007>)
715608		**SMART**	Fortwo
715609		**SUZUKI**	Grand Vitara III
715610		**RENAULT**	Scénic II
715611		**CHRYSLER**	Grand Voyager (2004>)
715612		**CITROËN**	Xsara Picasso
715613		**CITROËN**	Dispatch (2007>)
715614		**CITROËN**	Dispatch (2007>)

Valeo			
715615		**FIAT**	Albea
715616		**CITROËN**	Nemo
715617		**FORD**	Fiesta (95>2002)
715618		**KIA**	Sephia II
715619		**LEXUS**	RX 300
715620		**LEXUS**	GS (2005>)
715621		**MERCEDES**	SL (R230)
715622		**MITSUBISHI**	Pajero III (2000>)
715623		**CITROËN**	C Crosser
715624		**SSANGYONG**	Actyon
715625		**SUBARU**	Forester III
715626		**SUBARU**	Forester I
715627		**VOLVO**	C30
715628		**VOLVO**	C30
715629		**CITROËN**	Xsara Break (N2)
715631		**CITROËN**	C Crosser
715632		**OPEL**	Astra F (91>98)
715633		**RENAULT**	Kangoo (97>2003)
715635		**CITROËN**	C5 (2008>)
715636		**CITROËN**	Jumper (2006>)
715637		**DAIHATSU**	Sirion II
715638		**HYUNDAI**	i 30
715639		**HYUNDAI**	Tucson
715640		**JAGUAR**	Xk
715641		**LEXUS**	GS (2000>2005)
715642		**MAZDA**	2 (2007>)
715643		**MERCEDES**	CL Class (216) (2006>)
715644		**OPEL**	Agila
715645		**VAUXHALL**	Corsa I (93>2000)
715646		**PEUGEOT**	306
715647		**RENAULT**	Mégane III
715648		**CHRYSLER**	300C
715649		**RENAULT**	Kangoo (2008>)
715650		**SCION**	xA
715651		**SUBARU**	Forester II
715652		**SUZUKI**	SX4
715653		**SEAT**	Toledo (91>1998)
715654		**CHEVROLET**	Captiva
715655		**LDV**	Maxus
715656		**HYUNDAI**	Getz
715657		**MAZDA**	Xedos 6 (CA)
715658		**CHEVROLET**	Cruze
715659		**CHEVROLET**	Cruze
715660		**FORD**	Fiesta (2008>)
715661		**FORD**	Fiesta (2008>)
715662		**HYUNDAI**	i 20
715664		**MAZDA**	323 (BA)
715665		**AUDI**	A3 (2003>)
715667		**RENAULT**	Koleos
715668		**SUZUKI**	Jimny
715669		**HYUNDAI**	H1 Starex
715670		**JEEP**	Cherokee II
715671		**CADILLAC**	CTS
715672		**RENAULT**	Scénic III
715673		**PEUGEOT**	508
715674		**FORD**	Cougar
715675		**OPEL**	Vectra B (95>2002)
715676		**VOLVO**	S40 (95>2004)
715677		**CITROËN**	Xsara (N1) (97>2000)
715678		**HONDA**	Accord VIII (2003>)
715679		**MAZDA**	2 (2003>2007)
715680		**SAAB**	9 -2x
715681		**JAGUAR**	XF
715682		**LADA**	110
715683		**AUDI**	A6 (94>97)
715684		**MERCEDES**	E Class (124)
715685		**BMW**	5 series E39
715686		**FIAT**	Bravo II
715687		**VOLVO**	Cross Country
715688		**MITSUBISHI**	Carisma
715689		**TOYOTA**	Corolla Verso (E12J) 2.0 D4D
715690		**BMW**	5 series (F07GT)
715691		**KIA**	Soul (2008>)
715692		**HONDA**	City

Valeo		
715693	**PORSCHE**	Panamera
715694	**NISSAN**	Pixo
715695	**DAIHATSU**	Cuore VIII
715696	**DODGE**	Nitro
715697	**HYUNDAI**	ix55 (2008>)
715698	**SUZUKI**	Liana
715699	**SSANGYONG**	Rexton
715700	**SSANGYONG**	Rodius
715701	**TOYOTA**	Avensis Verso (2001>)
715702	**LAND ROVER**	Freelander
715703	**NISSAN**	Murano (Z51) (2008>)
715704	**PORSCHE**	Cayenne
715705	**ALFA ROMEO**	Giulietta (2010>)
715711	**CHRYSLER**	Grand Voyager (2008>)
715721	**NISSAN**	Juke
715722	**RENAULT**	Fluence
715725	**RENAULT**	Clio IV
715726	**MAZDA**	3 (2008>)
715727	**AUDI**	A1 (2010>)
	SKODA	Fabia (2010>)
715728	**MAZDA**	MPV,RX-8
715729	**LEXUS**	GS (97>2000),IS (99>2005)
		LS (94>2000),RX (97>2003)
	TOYOTA	Harrier,Highlander I
715730	**LEXUS**	CT 200h (2010>)
		GS (2005>),GX 460,IS (2005>)
		LFA,LX 570,RX350/450H
	SUBARU	Legacy,Outback,Trezia
	TOYOTA	Alphard II,Auris,Avalon,Avensis
		Camry,Corolla X
		Highlander II,Hilux
		Land Cruiser, Prado
		RAV4 II (2006>)
		Tundra,Urban Cruiser
		Verso,Verso-S,Yaris II,Yaris III
715731	**CHEVROLET**	Captiva (2011>)
715732	**NISSAN**	Qashqai (2007>2010)
715733	**AUDI**	A6 (2010>),A6 Allroad (2012>)
		A7 (2010>),A8 (2009>)
		S7,S8 (2012>)
	BENTLEY	Mulsanne
715734	**RENAULT**	Latitude
715735	**CHRYSLER**	Sebring (2006>)
	DODGE	Avenger,Caliber,Journey
	FIAT	Freemont
	JEEP	Compass,Patriot
	LANCIA	Flavia
715736	**SMART**	Fortwo
715737	**AUDI**	A1 (2010>)
	SEAT	Ibiza (2012>)
	SKODA	Fabia (2010>)
715738	**HYUNDAI**	H1 (2000>2006)
		H1 Mini Bus (2001>2006)
715739	**LADA**	Kalina 1118,1119
715740	**HYUNDAI**	ix35,Tucson
	KIA	Sportage III
715741	**HYUNDAI**	ix20
	KIA	Venga (2010>)
715742	**FORD**	Transit (2006>)
715743	**SUZUKI**	Kizashi Sport
715744	**SEAT**	Mii
	SKODA	Citigo
	VOLKSWAGEN	UP
715745	**FORD**	Ranger
	MAZDA	BT-50 II
716000	**RENAULT TRUCKS**	AE (Magnum)
716001	**DAF**	LF 45
716004	**DAF**	65 CF
716005	**DAF**	95 Serie
716006	**DAF**	95 XF
716007	**DAF**	CF 85
716008	**DAF**	CF 85
716009	**RENAULT TRUCKS**	Kerax
716010	**MERCEDES TRUCKS**	Actros

Valeo		
716011	**MERCEDES TRUCKS**	Actros
716012	**MERCEDES TRUCKS**	Actros
716013	**MERCEDES TRUCKS**	Actros
716014	**MERCEDES TRUCKS**	Atego I
716015	**MERCEDES TRUCKS**	Atego I
716016	**MERCEDES TRUCKS**	MK Serie
716017	**MERCEDES TRUCKS**	Actros
716018	**MERCEDES TRUCKS**	Axor I
716019	**MERCEDES TRUCKS**	Axor
716020	**MERCEDES TRUCKS**	Axor
716021	**MERCEDES TRUCKS**	Atego I
716028	**IVECO**	Euromover
716029	**IVECO**	Euromover
716033	**IVECO**	Eurostar
716034	**MAN (BUS)**	Lions Coach
716035	**MAN TRUCKS**	L2000, L2000 Evolution
716036	**MAN (BUS)**	Lions Regio
716037	**MAN (BUS)**	Lions Regio
716039	**SCANIA TRUCKS**	Serie 4
716040	**SCANIA TRUCKS**	Serie 4
716041	**VOLVO TRUCKS**	F12
716045	**VOLVO TRUCKS**	F6
716046	**MAN (BUS)**	Lions Coach
716047	**MAN (BUS)**	Lions Series
716048	**MAN (BUS)**	Lions Coach
716049	**IRISBUS**	Agora
716050	**MERCEDES** (EVOBUS/SETRA)	O 530 - Citaro
716052	**SCANIA TRUCKS**	Serie P,G,R,T
716053	**VOLVO TRUCKS**	F12
716054	**NEOPLAN (NEOMAN)**	Transliner
716055	**NEOPLAN (NEOMAN)**	Starliner I
716056	**MAN (BUS)**	Lions Series
716057	**MAN (BUS)**	NG
716058	**MERCEDES** (EVOBUS/SETRA)	Comfort Class 400S
716059	**MERCEDES** (EVOBUS/SETRA)	Setra S400 Top Class
716060	**MERCEDES** (EVOBUS/SETRA)	O 530 - Citaro
716061	**MERCEDES** (EVOBUS/SETRA)	Setra S400 Top Class
716062	**IRISBUS**	Agora
716063	**IRISBUS**	Daily Citis
716064	**KING LONG BUSES**	XMQ
716065	**MERCEDES TRUCKS**	Actros II
716066	**MERCEDES TRUCKS**	Actros II
733075	**RENAULT**	Clio II (2001>2005)
811065	**FIAT**	Panda
811066	**ALFA ROMEO**	164 (87>98)
811075	**ALFA ROMEO**	145
811397	**FIAT**	Uno (83>95)
812002	**CITROËN**	AX (86>91)
812005	**CITROËN**	Xantia
812006	**CITROËN**	Xantia
812012	**AUDI**	80 (86>91)
812013	**VOLKSWAGEN**	Transporter (90>2003)
812014	**RENAULT**	Safrane
812015	**RENAULT**	R25
812016	**CITROËN**	AX (91>98)
812026	**RENAULT TRUCKS**	C-Range
812027	**SAAB**	9000
812028	**ROVER**	Mini
812029	**AUDI**	50
812030	**AUDI**	A3 (96>2003)
812031	**AUDI**	A3 (96>2003)
812032	**RENAULT**	R5
812034	**AUDI**	80 (72>81)
812036	**CITROËN**	BX
812037	**CITROËN**	XM
812039	**ROVER**	Metro
812044	**CITROËN**	Xantia
812045	**RENAULT**	Master (80>97)
812048	**RENAULT**	Laguna (94>98)
812049	**CHRYSLER**	300M
812053	**FORD**	Fiesta (83>89)
812057	**FORD**	Fiesta (89>95)
812058	**FORD**	Escort (90>94)
812069	**ROVER**	200 (89>95)

Valeo		
812070	**ROVER**	600
812071	**ROVER**	100
812072	**JAGUAR**	XJ (68>73)
812075	**IVECO TRUCKS**	190
812077	**OPEL**	Frontera
812081	**FIAT**	Barchetta (95>2003)
812084	**MERCEDES**	190 (201)
812093	**VOLVO**	340-360
812107	**NISSAN**	Micra (K11) (92>2002)
812108	**NISSAN**	Primera (P10) (90>2001)
812110	**OPEL**	Omega A (86>94)
812112	**RENAULT**	Laguna (94>98)
812113	**RENAULT**	Laguna (94>98)
812114	**PEUGEOT**	106 (91>96)
812115	**PEUGEOT**	405 (87>96)
812116	**CITROËN**	Evasion
812117	**OPEL**	Vectra B
812118	**OPEL**	Vectra B
812126	**OPEL**	Omega B (94>)
812128	**RENAULT TRUCKS**	Premium
812129	**FORD**	Escort (90>94)
812130	**RENAULT TRUCKS**	AE
812132	**IVECO TRUCKS**	Eurocargo
812133	**IVECO TRUCKS**	Eurostar
812134	**MERCEDES**	V Class (638/2)
812139	**RENAULT**	Espace II (91>96)
812141	**CITROËN**	Jumper (94>2001)
812145	**FIAT**	Barchetta (95>2003)
812146	**OPEL**	Astra F (91>98)
812148	**OPEL**	Corsa A (82>93)
812149	**OPEL**	Corsa B (93>2000)
812150	**OPEL**	Kadett E (84>91)
812154	**RENAULT**	Twingo (93>)
812156	**FIAT**	Marengo (159) (89>95)
812157	**RENAULT**	R19
812161	**RENAULT**	Mégane Scénic (96>2003)
812162	**RENAULT**	Mégane Scénic (96>2003)
812169	**RENAULT**	Clio II
812170	**RENAULT**	Master (97>2003)
812176	**ALFA ROMEO**	145
812181	**PEUGEOT**	406 (95>)
812194	**FIAT**	Marea
812211	**FIAT**	Punto II (99>2005)
812212	**PEUGEOT**	607 (2000>2004)
812215	**CITROËN**	C5 (2001>2004)
812220	**BMW**	3 series E46
812221	**CITROËN**	Xsara Picasso
812222	**OPEL**	Astra G (98>)
812223	**RENAULT**	Kangoo (97>2003)
812225	**OPEL**	Corsa C (2000>2006)
812234	**CITROËN**	C2
812235	**CITROËN**	C2
812238	**BMW**	3 series E21
812239	**BMW**	5 series E34
812240	**BMW**	3 series E36
812245	**VOLKSWAGEN**	LT (75>96)
812247	**RENAULT**	Mégane II
812249	**NISSAN**	Micra (K12) (2003>)
812250	**NISSAN**	Micra (K12) (2003>)
812251	**MERCEDES**	Sprinter (95>)
812253	**OPEL**	Signum
812254	**AUDI**	A3 (2003>)
812255	**AUDI**	A4 (2000>2004)
812256	**AUDI**	A4 (2000>2004)
812268	**LAND ROVER**	Freelander
812272	**FORD**	Fiesta (95>2002)
812274	**FORD**	Focus (98>2004)
812275	**FORD**	Cougar
812277	**FORD**	Transit (95>99)
812280	**FIAT**	Idea
812281	**FIAT**	Brava
812283	**FIAT**	Palio
812284	**OPEL**	Astra G (98>)
812285	**OPEL**	Astra G (98>)

Valeo		
812286	**TOYOTA**	Corolla (80) (83>87)
812287	**RENAULT**	Espace III (96>2000)
812288	**RENAULT**	Avantime
812294	**BMW**	5 series E34
812296	**BMW**	3 series E21
812299	**MERCEDES**	S Class (126)
812303	**FIAT**	Cinquecento
812304	**MERCEDES**	E Class (124)
812308	**RENAULT**	Modus
812309	**RENAULT**	Modus
812318	**BMW**	3 series E46
812319	**AUDI**	A2
812320	**FORD**	Fiesta (2002>)
812321	**MERCEDES**	C Class (203) (2000>)
812322	**PEUGEOT**	307 (2001>2004)
812323	**SEAT**	Cordoba (2002>)
812324	**FORD**	Galaxy (95>2006)
812326	**VOLVO**	440-460-480
812327	**VOLVO**	850
812328	**VOLVO**	S60
812329	**FIAT**	Bravo II (2007>)
812332	**FORD**	Transit (2000>)
812334	**LANCIA**	Y10
812335	**DAEWOO**	Lanos
812336	**FIAT**	Panda (2003>)
812337	**CITROËN**	C25 (81>94)
812338	**PEUGEOT**	307 (2001>2004)
812339	**PEUGEOT**	307 (2001>2004)
812340	**IVECO**	Daily IV (1999>)
812341	**IVECO**	Daily IV (1999>)
812342	**IVECO**	Daily II (1989>1996)
812343	**VOLVO TRUCKS**	FH 12 (1993>)
812344	**VOLVO TRUCKS**	FL
812345	**VOLVO TRUCKS**	FL
812346	**MAN**	L 2000
812347	**MERCEDES**	LP
812348	**MERCEDES**	LP
812349	**RENAULT TRUCKS**	AE
812350	**MAN**	F 2000
812351	**MAN**	F 90
812352	**MAN**	TG-A
812353	**MERCEDES**	O 302
812354	**MERCEDES**	MK
812355	**RENAULT-IRISBUS**	R312 BUS
812356	**MERCEDES**	NG
812357	**MERCEDES**	NG
812358	**CITROËN**	Jumper (94>2001)
812360	**BMW**	3 series E36 Compact
812361	**FORD**	Galaxy (95>2006)
812362	**BMW**	7 series E38
812363	**OPEL**	Corsa D (2006>)
812364	**FORD**	Transit (2000>)
812365	**BMW**	7 series E65/E66
812366	**MERCEDES**	CL Class (215)
812373	**RENAULT**	Clio III
812374	**DACIA**	Logan
812375	**NISSAN**	Primastar
812378	**PEUGEOT**	207
812382	**MINI**	MINI (R56) (2006>)
812395	**FIAT**	Ulysse (2002>)
812396	**HYUNDAI**	Atos
812399	**PEUGEOT**	205
812400	**ALFA ROMEO**	166
812401	**BMW**	1 series E81/E87
812409	**HYUNDAI**	Accent
812410	**KIA**	Rio
812411	**KIA**	Carnival
812412	**KIA**	Carnival
812413	**RENAULT**	Mégane III
812416	**PEUGEOT**	308
812417	**PEUGEOT**	308
812423	**RENAULT**	Mégane II
812424	**PEUGEOT**	508
812426	**ALFA ROMEO**	Giulietta

Valeo			
812430		HYUNDAI	i30
		KIA	Ceed
812431		HYUNDAI	Matrix
812436		KIA	Picanto (2006>2007)
812438		KIA	Picanto (2007>)
812440		HYUNDAI	Tucson
812441		HYUNDAI	i30
812442		DAEWOO	Kalos
812444		KIA	Carnival
813007		RENAULT	Magnum E-Tech
813012		VOLVO	FH12
813013		VOLVO	FH12
813014		MAN	TGA
813016		SCANIA	94
813017		VOLVO	FH12
813019		DAF	75
813022		MAN	F2000
813023		RENAULT	Midlum
813025		RENAULT	Premium
813030		MERCEDES	SK
813031		MERCEDES	Actros
813032		VOLVO	FL6
813101		OPEL	Astra H (2004>)
		VAUXHALL	Astra V (2004>)
813108		NISSAN	King Cab (D22)
813109		NISSAN	King Cab (D22)
813110		NISSAN	Terrano III
813111		NISSAN	Murano
813113		NISSAN	Micra (K12)
813115		NISSAN	X-Trail (T30)
813117		NISSAN	X-Trail (T30)
813121		ALFA ROMEO	159 (2005>2008)
813122		ALFA ROMEO	159 (2005>2008)
813123		ALFA ROMEO	159 (2005>2008)
813124		SAAB	9-5 (2001>)
813125		RENAULT	Espace IV (2006>)
813129		RENAULT	Mascott
813131		RENAULT	Clio III (2005>)
813132		RENAULT	Clio III (2005>)
813137		MERCEDES	C Class (204) (2007>)
813140		VOLVO	S60 (2010>)
813141		VOLVO	XC90 (2002>)
813142		VOLVO	XC90 (2002>)
813144		RENAULT	Espace IV (2006>)
813145		RENAULT	Laguna III (2007>)
813147		RENAULT	Laguna III (2007>)
813149		RENAULT	Laguna III (2007>)
813150		AUDI	A4 (2000>2004)
813151		BMW	3 series E46
813157		MERCEDES	C Class (203) (2000>2003)
813159		DAEWOO	Lanos
813161		CITROËN	C4 Picasso (2006>)
813162		CITROËN	C3 Picasso
813163		CITROËN	C5 (2004>2008)
813164		CITROËN	C4
813165		RENAULT	Modus
813166		AUDI	A4 (94>2000)
813167		FIAT	Albea
813168		HONDA	Civic V (EJ/EK) (95>2001)
813169		HYUNDAI	Accent (99>2003)
813170		HYUNDAI	Accent (94>99)
813171		FIAT	Idea
813173		MERCEDES	V Class (638/2)
813175		MAZDA	Mazda 6
813189		CITROËN	C2
813190		AUDI	A4 (2000>2004)
813194		BMW	5 series E60
813195		MERCEDES	CLK (209) (2002>)
813196		MERCEDES	A Class (169) (2004>2008)
813197		FIAT	Linea (2007>)
813198		DACIA	Logan
813200		AUDI	A3 (96>2003)
813203		FORD	Focus C-MAX (2003>2007)
813220		RENAULT	Laguna II

Valeo			
813222		RENAULT	Mégane II (2002>)
813223		CITROËN	Berlingo (2008>),C3 (2009>)
			C3 Picasso,C4,C5 (2008>),DS3
		PEUGEOT	207,307,308,508
			Partner (2008>)
813225		PEUGEOT	407
813228		CHRYSLER	PT Cruiser
813255		ALFA ROMEO	159 (2005>2008)
813256		DACIA	Logan (X90, H79)
813258		MERCEDES	C Class (204) (2007>)
813262		NISSAN	Qashqai (2007>2010)
813263		RENAULT	Mégane III (2008>)
813264		RENAULT	Latitude
813265		RENAULT	Latitude
813268		SUZUKI	Grand Vitara (YT4)
813269		SUZUKI	Grand Vitara (YT4)
813270		VOLVO	S80 (2006>)
813271		VOLVO	V70 (2007>)
813317		CITROËN	Berlingo (2002>),C2
			C3 (2002>),C3 Pluriel,Nemo
			Xsara (2000>),Xsara Picasso
		FIAT	Fiorino (2008>)
		PEUGEOT	1007,206,206+,307,Bipper
			Partner (2002>),Ranch (2002>)
813322		CITROËN	C8
		PEUGEOT	807
813323		VOLVO	C30,S40 (2004>),V50
813339		RENAULT	Koleos
813343		NISSAN	Micra (K12),Note (2005>)
			Tiida (C11X) (2007>)
813350		HYUNDAI	Getz (2002>2005)
813353		HYUNDAI	Getz (2002>)
813356		HYUNDAI	i30
		KIA	Ceed
813357		HYUNDAI	Tucson (2004>)
		KIA	Sportage
813358		HYUNDAI	Getz (2005>)
813359		HYUNDAI	Elantra (2006>),i30
		KIA	Ceed
813360		KIA	Cerato
813361		HYUNDAI	Grandeur,Sonata (2005>)
		KIA	Magentis II
813362		KIA	Cerato
813364		HYUNDAI	ix55
813366		HYUNDAI	i30
		KIA	Ceed
813367		KIA	Picanto (2004>)
813368		HYUNDAI	i10
813369		HYUNDAI	i10
813370		KIA	Sorento
813371		KIA	Sorento
813372		KIA	Soul (2008>),Venga (2009>)
813373		CHEVROLET	Matiz
813374		HYUNDAI	Solaris (Rus)
813375		KIA	Picanto (2004>2007)
813377		HYUNDAI	Santa Fé (2006>)
813379		HYUNDAI	i10
813381		RENAULT	Clio IV 1.2
813382		RENAULT	Clio IV 0.9 Tce
813383		RENAULT	Clio IV 1.5 dci
813384		RENAULT	Clio IV 1.6 turbo
813400		AUDI	A3 (96>2003),S3 (98>2003),TT
		FORD	Galaxy (95>2000)
		SEAT	Alhambra,Cordoba (99>2002)
			Ibiza (99>2001),Inca,Leon
			Toledo (98>2004)
		SKODA	Octavia (96>2004)
		VOLKSWAGEN	Bora,Caddy (95>2004)
			Golf IV (97>2003)
			New Beetle (98>)
			Polo (99>2001),Sharan (95>)
813600		OPEL	Astra H (2004>)
813601		OPEL	Astra H (2004>)
813602		OPEL	Astra H (2004>)

Valeo			
813603		OPEL	Zafira II (2005>)
813604		OPEL	Astra H (2004>)
813605		OPEL	Astra H (2004>)
813606		FORD	Escort (90>94)
813625		RENAULT	Espace IV (2006>)
813627		FORD	Galaxy (2000>2006)
813628		LANCIA	Dedra (94>99)
813630		RENAULT	R21
813631		RENAULT	Clio III (2005>)
813632		RENAULT	Clio III (2005>)
813633		RENAULT	Laguna II
813634		RENAULT	Laguna II
813635		RENAULT	Espace IV (2002>2006)
813637		MERCEDES	C Class (204) (2007>)
813638		FORD	Fiesta (2002>)
813640		VOLVO	S60 (2010>),S80 (2006>) V60 (2010>),V70 (2000>) XC70 (2000>)
813644		RENAULT	Espace IV (2006>)
813645		RENAULT	Laguna III (2007>)
813647		RENAULT	Laguna III (2007>)
813649		RENAULT	Laguna III (2007>)
813650		AUDI	A4 (2000>) A4 Cabriolet (2002>2005) A6 (2004>2008),A8 (2002>2007)
813657		MERCEDES	C Class (203) (2000>2003)
813662		CITROËN	C4
813663		PEUGEOT	407
813664		CITROËN	C4
813665		RENAULT	Clio III (2005>) Kangoo (2007>) Modus (2004>) Twingo (2007>)
813682		OPEL	Vectra C (2005>)
813685		OPEL	Signum
813686		SAAB	9-3 (2005>)
813688		OPEL	Signum Vectra C (2005>)
813689		CITROËN	C2
813690		AUDI	A4 (2000>2004) A4 Cabriolet (2002>2005) S4 (99>2001)
813695		MERCEDES	C Class (203) (2000>) CLK (209) (2002>) S Class (220)
813700		AUDI	A3 (96>2003)
813705		RENAULT	Mégane II,Scénic II
813711		FORD	Fiesta (2002>),Fusion (2002>)
813712		PEUGEOT	407
813713		CITROËN	C5 (2004>2007)
813714		PEUGEOT	307 (2005>)
813715		PEUGEOT	407
813716		CITROËN	C4 Picasso (2006>)
813717		CITROËN	C4 Picasso (2006>)
813718		PEUGEOT	407
813719		CITROËN	C4
813723		CITROËN	C3 Picasso
813725		CITROËN	C5 (2008>)
813726		CITROËN	C5 (2008>)
813733		FORD	Focus (2004>)
813734		FORD	Focus (2004>)
813735		FORD	Focus (2004>)
813736		FORD	Focus (2004>)
813737		FORD	Focus (2004>)
813738		FORD	Galaxy (2006>2010)
813739		FORD	Galaxy (2006>2010)
813740		FORD	Transit (2006>)
813741		FORD	Transit (2006>)
813749		PEUGEOT	208,Partner (2008>)
813763		RENAULT	Mégane III,Scénic III
813764		RENAULT	Latitude
813765		NISSAN	Primastar (2006>)
		RENAULT	Latitude,Master (2010>)
813769		SUZUKI	Grand Vitara (YT4)

Valeo			
813804		CITROËN	C5 (2001>2004)
813806		CITROËN	Xsara Picasso
813808		CITROËN	Jumper (94>2001)
813809		CITROËN	C2
813810		CITROËN	Dispatch (2004>2006)
813811		CITROËN	C8
813812		CITROËN	Xsara (2000>)
813813		CITROËN	Dispatch (2007>)
813814		CITROËN	Xsara (2000>)
813815		CITROËN	C5 (2001>2004)
813816		PEUGEOT	406 (99>)
813817		CITROËN	C2
813818		PEUGEOT	206
813820		CITROËN	C5 (2001>2004)
813824		CITROËN	Xsara (2000>)
813825		RENAULT	Mégane II (2002>)
813826		RENAULT	Clio III FL (2009>)
813827		DACIA	Logan
813828		RENAULT	Mégane II (2002>)
813829		VOLKSWAGEN	Phaeton (2002>2007) Touareg (2002>) Transporter (7J/7H)(2003>2009)
813831		CHRYSLER	Voyager (96>2001)
813832		LAND ROVER	Freelander
		MG	MG ZS,MG ZT
		ROVER	45 (2000>2004),75
813833		BMW	3 series E46 X3 (2003>2006)
813834		NISSAN	Almera (2000>2006) Almera Tino (2000>) Primera (P11) (96>2001) Primera (P12) (2001>)
813835		AUDI	A4 (2007>) A5 (2007>2012) A5 Cabriolet (2009>) A6 (2004>) Q5
813836		AUDI	A6 (2001>2004)
813837		AUDI	A4 (2000>2004) A4 Cabriolet (2002>2005)
813838		AUDI	A1 (2010>),A3 (2003>) A3 Cabriolet (2008>) S3 (2006>),TT (2006>)
		SEAT	Altea,Leon II (2005>) Toledo (2004>)
		SKODA	Octavia (2004>)
		VOLKSWAGEN	Golf VI,Golf VI Plus Jetta (2010>) New Beetle (2011>) Scirocco (2008>),Tiguan
813842		TOYOTA	Avensis (97>2000) Corolla (90) (87>92)
814000		SAAB	9-5 (2001>2004)
814002		VOLKSWAGEN	Passat (2005>2010)
814003		RENAULT	Master (2006>)
814004		AUDI	A6 (2004>)
814006		RENAULT	Laguna II (2005>)
814007		RENAULT	Espace IV (2002>2006)
814008		NISSAN	Qashqai (2007>2010)
814009		NISSAN	Qashqai (2007>2010)
814010		NISSAN	Qashqai (2007>2010)
814011		BMW	1 series E81
814012		BMW	1 series E81
814014		OPEL	Meriva
		VAUXHALL	Meriva
814051		DACIA	Logan
814061		RENAULT	Twingo III (2007>)
814065		CITROËN	C8
814066		OPEL	Corsa C (2003>)
814069		CITROËN	Jumper (2006>)
814077		DACIA	Sandero
814080		CITROËN	Xsara Picasso
814081		CITROËN	Jumper (2002>)
814083		FORD	Fiesta (2002>2005)

Valeo			
814085		**CITROËN**	Jumper (2006>)
814087		**FORD**	Transit (2006>)
814090		**CITROËN**	C5 (2008>)
814094		**RENAULT**	Mégane III
814095		**CITROËN**	C2
814155		**FIAT**	500 Nuova (2007>)
814158		**TOYOTA**	Prius (2003>2009)
814159		**HONDA**	Accord (2003>2008)
814165		**LAND ROVER**	Range Rover (2002>2009)
814167		**PORSCHE**	911 Carrera (04>08)
814171		**RENAULT**	Trafic (2006>)
814172		**RENAULT**	Trafic (2006>)
814173		**CITROËN**	C5 (2008>)
814178		**DACIA**	Duster
814179		**RENAULT**	Master (2010 >)
814184		**FORD**	Galaxy (2006>)
814185		**FORD**	Kuga
814186		**MERCEDES**	SLK (171)
814187		**RENAULT**	Mégane III
814189		**BMW**	1 series
814190		**BMW**	3 series
814191		**BMW**	1 series
814192		**BMW**	5 series
814197		**FORD**	C-Max
814198		**LANCIA**	Lybra
814199		**JAGUAR**	X-Type
814201		**OPEL**	Astra J (2009>)
814202		**OPEL**	Astra J (2009>)
814203		**TOYOTA**	Land Cruiser (96>2002)
814204		**TOYOTA**	RAV 4 (2006>)
814205		**TOYOTA**	Auris (2006>)
814206		**DAIHATSU**	Terios 2 (2006>)
814207		**TOYOTA**	Avensis Verso (2001>2005)
814208		**TOYOTA**	Avensis (2003>2008)
814209		**TOYOTA**	Avensis (2003>2008)
814210		**TOYOTA**	Corolla (120) (2001>)
814211		**TOYOTA**	Corolla Verso (2004>2009)
814212		**TOYOTA**	Corolla Verso (2004>2009)
814213		**TOYOTA**	Avensis (2003>2008)
814214		**MITSUBISHI**	L 200 II (K84T) (2006>)
814215		**MAZDA**	RX8 (2003>)
814216		**MAZDA**	3 (2003>2006)
814217		**HONDA**	Civic (FK/FD) (2006>)
814218		**TOYOTA**	RAV 4 (2000>2005)
814219		**SUZUKI**	Splash
814220		**TOYOTA**	IQ
814221		**NISSAN**	Juke
814223		**TOYOTA**	Yaris (2005>)
814224		**TOYOTA**	Yaris (2005>)
814225		**HONDA**	CR-V (2002>2006)
814226		**LEXUS**	IS (2005>)
814227		**MAZDA**	MX5 (2005>)
814228		**SUZUKI**	Grand Vitara (98>2005)
814230		**TOYOTA**	Land Cruiser (2002>)
814231		**NISSAN**	X-Trail (2007>)
814232		**HONDA**	CR-V (2006>2010)
814233		**TOYOTA**	Yaris (2005>)
814234		**TOYOTA**	Auris (JPP150) (2006>)
814235		**MAZDA**	CX-7 (2007>)
814236		**TOYOTA**	Land Cruiser (2002>)
814237		**SUZUKI**	Swift (2005>)
814238		**TOYOTA**	Corolla (120) (2001>)
814239		**MAZDA**	MPV
814240		**MITSUBISHI**	Colt (91>96)
814241		**HONDA**	Jazz (2002>)
814242		**HONDA**	Accord (2003>2008)
814243		**HONDA**	Civic (EP) (2001>)
814244		**SUZUKI**	Vitara
814245		**TOYOTA**	HILUX
814246		**TOYOTA**	Carina E (92>97)
814247		**TOYOTA**	Camry (96>2001)
814248		**TOYOTA**	Corolla (100) (92>97)
814250		**KIA**	Sportage
814251		**MAZDA**	MX6

Valeo			
814252		**NISSAN**	Patrol (79>97)
814253		**MAZDA**	323 (BA) (94>96)
814254		**MAZDA**	626 (GE) (91>97)
814255		**HYUNDAI**	Accent (94>99)
814256		**NISSAN**	Maxima QX
814257		**MAZDA**	323 (BA) (96>98)
814258		**MAZDA**	Demio
814259		**SUBARU**	Legacy (94>97)
814260		**MITSUBISHI**	Galant (96>2003)
814261		**TOYOTA**	Previa (2000>)
814262		**MITSUBISHI**	Space Wagon (98>)
814263		**TOYOTA**	Corolla Verso (2001>2003)
814264		**HYUNDAI**	Coupe (2002>)
814265		**MAZDA**	3 (FL) (2006>)
814266		**MAZDA**	MPV
814267		**HONDA**	Stream
814268		**SUBARU**	Forester (97>2002)
814269		**TOYOTA**	HILUX
814270		**KIA**	Carnival
814271		**TOYOTA**	Avensis (2003>2008)
814272		**MITSUBISHI**	Lancer (2003>)
814273		**MITSUBISHI**	Lancer (2003>)
814274		**MAZDA**	626 (GD) (87>92)
814275		**NISSAN**	Sunny (Y10) (90>96)
814276		**HONDA**	Accord coupe (91>93)
814277		**DAEWOO**	Espero
814278		**MAZDA**	323 (BG) (89>94)
814279		**TOYOTA**	Camry (86>91)
814280		**TOYOTA**	Land Cruiser (80>96)
814281		**MAZDA**	323 (BF) (85>89)
814282		**TOYOTA**	Camry (91>96)
814283		**TOYOTA**	Camry (96>2001)
814284		**NISSAN**	Terrano (87>95)
814285		**TOYOTA**	RAV 4 (94>2000)
814286		**AUDI**	80 (91>95)
814287		**BMW**	Z4 (2002>2009)
814288		**AUDI**	80 (91>95)
814289		**FORD**	Scorpio (94>98)
814290		**CHRYSLER**	Voyager (96>2001)
814291		**AUDI**	80 (86>91)
814292		**FIAT**	Croma
814293		**ALFA ROMEO**	166 (98>2003)
814295		**AUDI**	100 (82>90)
814296		**AUDI**	80 (91>95)
814298		**TOYOTA**	Corolla (110) (97>99)
814300		**NISSAN**	Micra (K11) (92>2000)
814302		**HONDA**	Accord coupe (93>97)
814303		**MITSUBISHI**	Colt (96>)
814304		**NISSAN**	King Cab (D22)
814305		**SUZUKI**	Baleno
814306		**SUBARU**	Forester (97>2002)
814307		**TOYOTA**	Yaris (99>2005)
814308		**TOYOTA**	HILUX
814309		**TOYOTA**	Yaris (99>2005)
814310		**LEXUS**	LS 400 (94>2000)
814311		**SUBARU**	Forester (97>2002)
814312		**SUBARU**	Forester (2002>)
814314		**SUBARU**	Legacy (98>2002)
814315		**CITROËN**	C Crosser
814316		**MAZDA**	Premacy (99>2001)
814317		**SAAB**	900 (79>93)
814326		**HONDA**	Civic (EJ/EK)
814327		**SUZUKI**	Swift (2005>)
814328		**NISSAN**	Almera (2000>2003) Primera (P12) (2001>)
814330		**SUZUKI**	Liana
814331		**NISSAN**	X-Trail (2001>2007)
814333		**HONDA**	Civic (FK/FD) (2006>)
814341		**HYUNDAI**	Getz (2002>2006) Getz (TB) (India) (2007>) i10
814344		**DAEWOO**	Kalos
814345		**KIA**	Cerato
814346		**KIA**	Picanto

Valeo			
814347		HYUNDAI	Sonata (2005>2008)
			Tucson (2004>)
		KIA	Sportage
814350		HYUNDAI	Accent (2003>)
814351		HYUNDAI	Elantra (2006>),i30
814352		KIA	Sorento (2002>2006)
814353		HYUNDAI	Santa Fé (2000>)
814354		HYUNDAI	i10
814357		SEAT	Leon (99>2005)
			Toledo (98>2004)
		VOLKSWAGEN	Bora,Golf IV (97>2003)
814358		CHEVROLET	Matiz
814359		OPEL	Antara
		VAUXHALL	Antara (2006>)
814360		FORD	Mondeo III (2007>)
814362		HYUNDAI	Solaris
814363		CITROËN	C5 (2008>)
		PEUGEOT	407,508
814364		AUDI	A1 (2010>)
		SEAT	Ibiza (2008>)
814365		PEUGEOT	508
814366		CITROËN	C8,Dispatch (2007>)
			Jumpy (2007>)
		FIAT	Scudo (2007>),Ulysse (2002>)
		LANCIA	Phedra
		PEUGEOT	807,Expert II (2007>)
814367		BMW	X5 E70 (12/2006>)
			X5 LCI E70 (2010>)
			X6 E71
814368		MERCEDES	C Class (203) (2004>)
814369		VOLKSWAGEN	Jetta (2010>)
814370		AUDI	A4 (2007>)
			A5 (2007>2012)
			A5 Cabriolet (2009>)
			Q5
			S4 (2008>)
			S5 (2007>2012)
			S5 Cabriolet (2009>2012)
815963		DAF	95 FAT
815964		DAF	95 XF
815966		IVECO	Eurocargo
815967		RENAULT	Magnum
815968		RENAULT	Premium
815969		SCANIA	124
815970		VOLVO	FH12
815971		MAN	F2000
815972		MAN	TGA
815973		MERCEDES	Atego
815974		MERCEDES	Actros
815975		MERCEDES	Actros
816803		CITROËN	Xantia (93>97)
816839		RENAULT	Espace III (96>2000)
816850		CITROËN	XM (89>94)
816852		CITROËN	Evasion (94>98)
816863		RENAULT	R19
816865		RENAULT	Safrane
816866		RENAULT	R21
816867		RENAULT	Espace III (96>2000)
816891		MERCEDES	Sprinter (95>2006)
816900		MERCEDES	C Class (202) (93>2001)
816902		OPEL	Corsa B (93>2000)
816908		SEAT	Cordoba (93>96)
816910		VOLKSWAGEN	Golf II Cabriolet (93>98)
816912		RENAULT	Mégane (95>99)
816921		ROVER	25 (99>)
816922		BMW	7 series E38
816924		OPEL	Tigra (94>2003)
816948		FORD	Galaxy (95>2000)
816949		MERCEDES	190 (201)
816962		RENAULT TRUCKS	AE
816964		CITROËN	Saxo (96>99)
816967		AUDI	A4 (94>2000)
816973		ALFA ROMEO	145
816977		PEUGEOT	106 (96>2003)

Valeo			
816980		RENAULT TRUCKS	Kerax
816981		BMW	8 series E31
816985		FIAT	Marea
816991		CHRYSLER	Stratus
817011		MERCEDES	V Class (638/2)
817015		CHRYSLER	Grand Voyager (91>96)
817023		JEEP	Grand Cherokee (93>99)
817024		VOLKSWAGEN	Golf III Cabriolet (98>2002)
817042		CITROËN	Xsara (97>2000)
817065		OPEL	Movano
817067		LAND ROVER	Freelander
817073		CHRYSLER	Voyager (96>2001)
817074		CHRYSLER	Grand Voyager (2001>2004)
817075		CHRYSLER	300M
817080	EVA	CITROËN	ZX
817085	EVA	CITROËN	Xsara (97>2000)
817093	EVA	PEUGEOT	405 (92>96)
817095	EVA	PEUGEOT	406 (95>99)
817171		RENAULT	Clio II (98>2001)
817197		RENAULT	Mégane (95>99)
817225		FORD	Ka
817229		CITROËN	Xsara (97>2000)
817230		CITROËN	Xsara (97>2000)
817232		FORD	Cougar
817235		MERCEDES	E Class (210)
817244		AUDI	A3 (96>2003)
817245		SEAT	Cordoba (99>2002)
817246		SEAT	Arosa
817247		SEAT	Arosa
817248		BMW	5 series E39
817252		MERCEDES	E Class (210)
817253		NISSAN	Primera (P11) (96>2001)
817283		PEUGEOT	206
817288		JEEP	Grand Cherokee (93>99)
817328	EVA	MERCEDES	Sprinter (95>)
817338	EVA	PEUGEOT	406 (95>99)
817339	EVA	PEUGEOT	406 (99>)
817375		PEUGEOT	406 (95>)
817379		RENAULT	Mascott
817383		BMW	3 series E46
817384		FIAT	Bravo
817385		FIAT	Punto II (99>2003)
817386		LANCIA	Lybra
817405		BMW	3 series E46
817406		BMW	7 series E38
817427		VOLKSWAGEN	New Beetle (98>2001)
817428		RENAULT	Clio II (98>2001)
817445		CHRYSLER	PT Cruiser
817446		MERCEDES	M Class (163)
817458		MERCEDES	M Class (163)
817463		ALFA ROMEO	147 (2000>2004)
817464		CITROËN	C5 (2001>2004)
817465		CITROËN	C5 (2001>2004)
817467	EVA	PEUGEOT	607 (2000>2004)
817475		CHRYSLER	Sebring
817477		CHRYSLER	Grand Voyager (2001>2004)
817492		MERCEDES	C Class (202) (93>2001)
817493		FORD	Focus (98>2001)
817504		MERCEDES	A Class (168) (97>2003)
817505		OPEL	Astra G (98>)
817506		OPEL	Astra G (98>)
817507		SAAB	900 (93>)
817508		CITROËN	Xsara (2000>)
817509		RENAULT	Mégane Scénic (96>99)
817510	EVA	BMW	3 series E36
817511	EVA	BMW	3 series E46
817512	EVA	BMW	5 series E34
817513	EVA	BMW	7 series E38
817514	EVA	MERCEDES	C Class (202)
817515	EVA	MERCEDES	200/300 (124)
817516	EVA	MERCEDES	E Class (210)
817517	EVA	MERCEDES	S Class (140)
817518	EVA	OPEL	Astra G (98>)
817519	EVA	PEUGEOT	206

Valeo			
817520	EVA	PEUGEOT	306
817521	EVA	AUDI	A4 (94>2000)
817524		PEUGEOT	307 (2001>2005)
817526		PEUGEOT	307 (2001>2005)
817527		ALFA ROMEO	147 (2000>2004)
817530	EVA	OPEL	Corsa C
817547		MINI	MINI
817549		LAND ROVER	Freelander
817559		VOLVO	S40
817560		MITSUBISHI	Carisma (95>99)
817561		BMW	5 series E39
817562		MERCEDES	C Class (202) (93>2001)
817563		MERCEDES	C Class (202) (93>2001)
817567		FORD	Mondeo (2000>2002)
817568		RENAULT	Laguna II (2001>)
817569		AUDI	A4 (2000>2004)
817570		AUDI	A2
817575		BMW	X5
817577		OPEL	Vivaro
817579		CITROËN	C8
817582		CHRYSLER	Grand Voyager (2001>2004)
817601		RENAULT	Master (97>2003)
817602		RENAULT	Clio II (2001>2005)
817603		NISSAN	Primera (P11) (96>2001)
817607		BMW	5 series E39
817608		RENAULT	Mégane II
817609		OPEL	Corsa C (2000>2003)
817610		OPEL	Corsa C (2000>2003)
817644		OPEL	Vivaro
817645		OPEL	Vivaro
817646		RENAULT	Clio II (2001>2005)
817647		OPEL	Signum
817648		OPEL	Signum
817655		CITROËN	Saxo (99>)
817657		FORD	Mondeo (2000>2002)
817659		MERCEDES	A Class (168) (97>2003)
817661		RENAULT	Kangoo (2003>)
817662		RENAULT	Kangoo (2003>)
817664		FORD	Fiesta (2002>2005)
817665		AUDI	A6 (97>2001)
817666		AUDI	A6 (97>2001)
817667		CITROËN	Xsara (2000>)
817668		CITROËN	C8
817669		FIAT	Stilo (2001>2004)
817670		OPEL	Vectra B (95>99)
817674		TOYOTA	Yaris (99>2005)
817675		VOLVO	850
817679		SKODA	Superb
817680	EVA	NISSAN	Micra (K12) (2003>2005)
817682	EVA	NISSAN	Micra (K12) (2003>2005)
817683	EVA	NISSAN	Micra (K12) (2003>2005)
817684		FIAT	Punto II (99>2003)
817685		FIAT	Punto II (99>2003)
817686		SEAT	Cordoba (2002>)
817687		RENAULT	Kangoo (2003>)
817689		OPEL	Movano
817701		DACIA	Logan
817703		FIAT	Punto II (2003>)
817709	EVA	RENAULT	Scénic II
817711		SAAB	9-3 (2002>)
817712		SAAB	9-3 (2002>)
817717	EVA	OPEL	Signum
817718	EVA	OPEL	Signum
817719	EVA	AUDI	A3 (2003>)
817720	EVA	AUDI	A3 (2003>)
817731		RENAULT	Espace IV (2002>2006)
817732		NISSAN	Micra (K11) (92>2000)
817739		CHRYSLER	Grand Voyager (2004>)
817740		CITROËN	C5 (2004>)
817741		AUDI	A4 (2000>2004)
817742		NISSAN	Interstar
817777		AUDI	A3 (2003>2008)
817780		HONDA	Civic (EP) (2001>)
817781		HONDA	Accord (93>95)

Valeo			
817783		HONDA	Accord coupe (97>2002)
817789		MITSUBISHI	Carisma (95>),Space Star
817790		MITSUBISHI	Carisma (99>)
817791		MITSUBISHI	Pajero Pinin (99>2005)
817792		NISSAN	Almera (95>2000)
817794		NISSAN	Almera (95>2000)
817798		OPEL	Meriva
		VAUXHALL	Meriva
817799		RENAULT	Twingo (93>98)
817801		SMART	Smart - For Two
817802		TOYOTA	Avensis (97>2000)
817803		TOYOTA	Avensis (97>2000)
817805		TOYOTA	Corolla (120) (2001>)
817806		VOLKSWAGEN	Touran (2003>2006)
817809		OPEL	Signum
817818		ALFA ROMEO	147 (2000>2004)
817819		NISSAN	Almera (2000>2003)
817822		NISSAN	Almera (2000>2003)
817824		CITROËN	C5 (2004>)
817827		DACIA	Logan
817836		NISSAN	Juke,Micra (2003>),Note (2005>)
817837		MINI	MINI
817838		AUDI	Q7
		PORSCHE	Cayenne (2003>2006)
		VOLKSWAGEN	Touareg (2002>)
817839		OPEL	Astra H (2004>)
817840		AUDI	A4 (94>2000)
817841		MERCEDES	Vaneo (414)
817842		MERCEDES	Viano
817843		OPEL	Corsa C (2003>)
817844		OPEL	Corsa C (2003>)
817846		OPEL	Astra H (2004>)
817847		OPEL	Astra H (2004>)
817848		MERCEDES	C Class (203) (2000>2003)
817849		MERCEDES	C Class (203) (2000>2003)
817850		BMW	5 series E60
817851		BMW	5 series E60
817852		OPEL	Signum
817853		OPEL	Signum
817997		AUDI	A6 (97>2001)
818000		PEUGEOT	206
818001		PEUGEOT	206
818002		RENAULT	Mégane II
818003		MERCEDES	CLS (2004>2010)
818004		FORD	Galaxy (2000>)
818005		FIAT	Panda (2003>)
818006		FIAT	Punto II (99>2003)
818007		FIAT	Multipla (98>2003)
818008		RENAULT	Laguna (98>2000)
818009		FIAT	Brava
818013		CITROËN	C1
818014		CITROËN	C1
818015		CITROËN	C3 (2002>2005)
818017		FIAT	Punto II (99>2003)
818018		CITROËN	Jumper (2002>)
818019		FIAT	Brava
818020		FIAT	Idea
818021		FIAT	Idea
818023		JAGUAR	X-Type
818024		JEEP	Grand Cherokee (93>99)
818025		LAND ROVER	Discovery (98>2004)
818027		RENAULT	Avantime
818028		RENAULT	Espace III (96>2000)
818029		RENAULT	Espace III (96>2000)
818030		RENAULT	Espace III (96>2000)
818031		ROVER	200 (89>95)
818032		TOYOTA	Picnic (96>2001)
818033		MAN	TG-A
818034		MERCEDES	Actros 1996
818035		MERCEDES	Atego I
818036		IVECO	Daily (99>)
818037		IVECO	Daily (99>)
818038		IVECO TRUCKS	Eurocargo
818039		VOLVO TRUCKS	FL

Valeo		
818040	**MAN**	F 2000
818041	**MAN**	F 90
818042	**MAN**	F 90
818043	**MAN**	L 2000
818044	**MAN**	M 2000
818046	**FORD**	Focus (2004>)
818047	**OPEL**	Astra G (98>)
818050	**FORD**	Transit (2000>)
818060	**DAEWOO**	Matiz (98>)
818061	**DAEWOO**	Kalos
818070	**HONDA**	CR-V (97>2002)
818074	**HYUNDAI**	Getz (2002>) Getz (TB) (India) (2007>)
818075	**HYUNDAI**	Matrix
818080	**KIA**	Sorento (2002>)
818081	**MITSUBISHI**	Galant (92>96)
818084	**MAZDA**	323 (BA) (94>96)
818085	**MAZDA**	626 (GF) (97>99)
818086	**MAZDA**	323 (BJ) (98>2000)
818087	**MAZDA**	323 (BJ) (98>2000)
818088	**MAZDA**	323 (BJ) (98>2000)
818090	**MAZDA**	6 (2002>2005)
818092	**MAZDA**	Premacy (99>2001)
818101	**SUBARU**	Legacy (94>97)
818103	**TOYOTA**	4 Runner (130)
818104	**TOYOTA**	Celica (93>99)
818105	**TOYOTA**	Picnic (96>2001)
818107	**TOYOTA**	Corolla (110) (97>99)
818114	**OPEL**	Astra H (2004>)
818116	**IVECO TRUCKS**	Eurocargo Tector Restyling (2003>)
818118	**OPEL**	Corsa C (2000>2003)
818162	**FIAT**	Panda (2003>)
818165	**RENAULT**	Clio III (2005>)
818166	**RENAULT**	Clio III (2005>)
818168	**OPEL**	Astra H (2004>)
818170	**CITROËN**	C4
818171	**CITROËN**	C4
818172	**RENAULT TRUCKS**	Magnum
818173	**MERCEDES**	Sprinter (2006>)
818175	**SAAB**	9-3 (2002>)
818190	**AUDI**	A4 (2004>)
818191	**CITROËN**	Jumper (94>2001)
818192	**FIAT**	Bravo II (2007>)
818193	**CITROËN**	Nemo
818194	**FORD**	Fiesta (2005>)
818195	**FORD**	Fiesta (2005>)
818200	**MERCEDES**	C Class (203) (2000>) CLK (209)
818201	**BMW**	1 series E87, E87 LCI
818205	**MERCEDES**	A Class (169) (2004>)
818411	**SEAT**	Cordoba (93>96)
818440	**CITROËN**	Berlingo (96>2002)
818445	**FIAT**	Punto (93>99)
818452	**MERCEDES**	E Class (210)
818462	**FIAT**	Brava
818468	**FORD**	Mondeo (93>96)
818479	**PEUGEOT**	306 (93>97)
818500	**ROVER**	200 (95>99)
818981	**CITROËN**	Berlingo (2002>)
818984	**VOLVO TRUCKS**	FM-Series
818985	**IVECO TRUCKS**	Stralis
818986	**DAF**	XF95-Series
818987	**VOLVO TRUCKS**	FH12-Series
818988	**SCANIA**	Series -P,G,R,T
818989	**VOLVO TRUCKS**	FH16-Series
818990	**VOLVO TRUCKS**	FH12-Series
818991	**VOLVO TRUCKS**	FH12-Series,FH16-Series
818992	**SCANIA**	Series-4
881769	**ROVER**	Mini
883468	**CITROËN**	Visa
883520	**CITROËN**	CX
883614	**DAF**	2800
883629	**PEUGEOT**	505
883674	**PEUGEOT**	505

Valeo		
883737	**PEUGEOT**	504
883739	**RENAULT**	Trafic (80>2001)
883790	**RENAULT**	Super 5
883965	**PEUGEOT**	205
883966	**PEUGEOT**	205
883973	**RENAULT**	R21
883976	**PEUGEOT**	405 (87>96)
883978	**PEUGEOT**	205
883982	**BMW**	5 series E34
883995	**PEUGEOT**	205
715730	**DAIHATSU**	Charade

Every effort has been made to ensure that the information contained in this catalogue is correct at the time of printing, but no warranty or representation is given or made as to the accuracy of such information and Valeo Service UK Ltd does not accept any liability whatsoever for any inaccuracies.

Valeo Service UK Ltd reserves the right to alter specifications and/or the final construction of products without notice.

Product references referred to in this catalogue may not be available in all countries.

All orders for products are only accepted subject to the terms and conditions of Valeo Service UK Ltd.

Photographs and drawings are not binding on Valeo Service UK Ltd. The copyright in this publication belongs to Valeo Service UK Ltd exclusively. No part of this publication may be reproduced by any means without the prior authorisation of Valeo Service UK Ltd.

L'affectation et la préconisation des produits figurant dans nos catalogues prennent en compte l'état du parc automobile au jour de leur parution.

La responsabilité de Valeo Service ne saurait être engagée en cas de modification, substitution ou suppression des affectations ou préconisations qui pourraient intervenir notamment à l'initiative des constructeurs de véhicules.

Les caractéristiques techniques de nos produits sont susceptibles d'évoluer à tout moment pour tenir compte des améliorations techniques et technologiques.

Certaines références peuvent ne pas être disponibles dans tous les pays.

Les commandes sont régies par les conditions générales de vente de Valeo Service.

Photos et dessins non contractuels. La reproduction de tout ou partie de cette publication est interdite sans l'autorisation expresse et écrite de Valeo Service.

La aplicación de los productos sobre vehículos y las especificaciones de los productos que figuran en nuestros catálogos se refieren a la situación del parque de automóviles en la fecha de puesta en circulación de los productos.

Valeo Service España SA no asume ninguna responsabilidad en caso de modificación, sustitución o supresión de dichas aplicaciones y/o especificaciones que pudieran producirse por iniciativa de los fabricantes de automóviles.

Las características técnicas de nuestros productos son susceptibles de evolucionar en cualquier momento para incorporar las mejoras técnicas y tecnológicas que se desarrollen.

Las referencias de productos mencionadas en este catalogo puede que no estén disponibles en todos los países.

Los pedidos se regiran por las conditiones generales de venta de Valeo Service España SA.

Las fotografías y dibujos que aparecen en nuestros catálogos son meramente indicativas, por lo que no siempre coinciden exactamente con la apariencia externa de nuestros productos. Se prohíbe la reproducción de todo o parte de esta publicación sin la autorización expresa y escrita de Valeo Service España SA.

As prescrições e recomendações relativas ao uso ou utilidade dos produtos constantes de nossos catálogos levam em consideração o estado do parque automotivo à época do lançamento desses produtos.

A Valeo Sistemas Automotivos Ltda (Valeo Cibié Service) não será responsável por quaisquer modificações, substituições ou supressões incidentes sobre as prescrições e recomendações relativas ao uso ou utilidade de nossos produtos, que sejam decorrentes de ações dos construtores de veículos.

As características técnicas de nossos produtos são suscetíveis de alteração a qualquer momento para que sejam incorporadas melhorias técnicas e/ou tecnológicas.

Certas referências podem não estar disponíveis em todos os países.

Os pedidos feitos pelos clientes são regidos pelas condições gerais de venda da Valeo Sistemas Automotivos Ltda (Valeo Cibié Service).

Fotos e desenhos não contratuais. A reprodução do todo ou de parte desta publicação é proibida sem a autorização expressa e por escrito da Valeo Sistemas Automotivos Ltda (Valeo Cibié Service).

Le applicazioni e le specifiche dei prodotti che figurano nei nostri cataloghi si riferiscono alla situazione del parco circolante al momento della pubblicazione.

Valeo Service Italia S.p.A. declina qualsiasi responsabilità in caso di modifica, sostituzione o soppressione di applicazioni o specifiche eventualmente apportate, senza preavviso, da parte dei Costruttori .

Le caratteristiche tecniche dei nostri prodotti sono suscettibili di modifiche in qualsiasi momento, per apportare migliorie tecniche e tecnologiche.

Alcuni riferimenti presenti in questo catalogo non sono disponibili in tutti i paesi.

Gli ordini sono regolamentati dalle condizioni generali di vendita di Valeo Service Italia S.p.A..

Le Foto ed i disegni che appaiono nel catalogo sono puramente indicativi. E' vietata la riproduzione della totalità o di una parte della presente pubblicazione senza un'esplicita autorizzazione scritta da parte di Valeo Service Italia S.p.A..

De ter zake van de producten in onze catalogi aangegeven bestemmingen en gedane aanbevelingen zijn gebaseerd op het wagenpark ten tijde van publicatie.

Valeo Service Benelux B.V. sluit elke aansprakelijkheid uit met betrekking tot wijziging, vervanging of annulering van de bestemmingen of aanbevelingen, die met name op initiatief van de autofabrikanten kunnen worden doorgevoerd.

De technische eigenschappen van onze producten kunnen te allen tijde evolueren teneinde rekening te houden met technische en technologische verbeteringen.

Bepaalde artikelen kunnen in bepaalde landen niet beschikbaar zijn.

Orders zijn onderworpen aan de algemene verkoopvoorwaarden van Valeo Service Benelux B.V.

Foto's en tekeningen zijn niet bindend.

De gehele of gedeeltelijke verveelvoudiging van deze uitgave zonder uitdrukkelijke voorafgaande schriftelijke toestemming van Valeo Service Benelux B.V. is verboden.

Die Verwendungsempfehlungen zu den in diesem Katalog aufgeführten Produkten beziehen sich auf den zum Zeitpunkt des Erscheinens dieses Katalogs existierenden Fahrzeugbestand.

Valeo Service Deutschland GmbH übernimmt keine Haftung für Änderungen, Ersetzungen oder Streichungen der Fahrzeuganwendung oder -Empfehlungen, die besonders auf Initiative der Fahrzeughersteller auftreten können.

Die technischen Eigenschaften unserer Produkte unterliegen ständiger Entwicklung, um technischen und technologischen Verbesserungen Rechnung zu tragen.

Die Fotos oder Zeichnungen in diesem Katalog dienen ausschliesslich der Veranschaulichung unserer Produkte. Rechtliche Ansprüche können daraus nicht abgeleitet werden.

Einige Produktreferenzen sind nicht in allen Ländern verfügbar.

Lieferungen unterliegen den Allgemeinen Verkaufsbedingungen von Valeo Service Deutschland GmbH.

Die Vervielfältigung dieses Katalogs oder Teilen davon ohne die schriftliche Erlaubnis von Valeo Service Deutschland GmbH ist nicht zulässig.

Przeznaczenie i zalecenia dotyczące produktów figurujących w naszych katalogach biorą pod uwagę stan parku samochodowego w dniu ich wprowadzenia na rynek.

Valeo Service Eastern Europe Sp. z o.o. nie mo e ponosić odpowiedzialno ci w przypadku zmiany, zastąpienia lub usunięcia wskazówek dotyczących przeznaczenia i zaleceń, które mogą wystąpić z inicjatywy producentów samochodów.

Dane techniczne naszych produktów mogą być w ka dej chwili zmienione w celu uwzględnienia ulepszeń technicznych i technologicznych.

Niektóre modele mogą być niedostępne w niektórych krajach.

Zamówienia podlegają ogólnym warunkom umów z Valeo Service Eastern Europe Sp. z o.o.

Wykorzystywanie w cało ci lub w czę ci zdjęć i rysunków zamieszczonych w naszych katalogach wymaga pisemnej zgody Valeo Service Eastern Europe Sp. z o.o.

Kataloglarımızda yer alan ürünlerin kullanım ve tanımları, otomobil parkının yayın tarihindeki durumuna göredir.

Valeo Otomotiv Dağitim AS, özellikle araç, üreticilerinin inisiyatifi sonucu yapılan değişiklik, ikame veya kaldırmalardan sorumlu tutulamaz.

Ürünlerimizin teknik özellikleri, teknik ve teknolojik gelişmelere paralel olarak geliştirilebilir.

Bazı referanslar bazı ülkelerde bulunmayabilir.

Siparişler, Valeo Otomotiv Dağitim AS'un genel satiş koşullarına uygun olarak ödenir.

Fotoğraf ve resimler akdi değildir. Işbu yayının Valeo Otomotiv Dağitim AS'un önceden verilmiş yazılı izni olmaksızın kısmen veya tamamen çoğaltılması yasaktır.

Назначение и рекомендации по эксплуатации продукции, содержащиеся в наших каталогах, указываются с учетом состояния автомобильного парка на день ее появления.

Компания «Valeo Service Eastern Europe Sp.zo.o» не несет ответственности в случае внесения изменений в рекомендации по эксплуатации продукции или их устранения, произошедших, в частности, по инициативе производителей автомобилей.

Технические характеристики нашей продукции могут претерпевать изменения в любой момент, с учетом усовершенствования технических и технологических процессов.

Некоторые виды продукции могут не иметься в наличии в отдельных странах.

Заказы осуществляются согласно общим правилам торговли, применяемым в компании «Valeo Service Eastern Europe Sp.zo.o».

Фотографии и изображения продукции могут не в полной мере соответствовать оригиналам. Воспроизведение всей или части настоящей публикации запрещено без специального письменного согласия компании «Valeo Service Eastern Europe Sp.zo.o».

Ο κατάλογος έχει συσταθεί λαμβάνοντας υπόψη τη σύσταση του στόλου αυτοκινήτων την ημέρα, της κυκλοφορίας του.

Η Valeo δε φέρει ευθύνη σε περίπτωση τροποποίησης, αλλαγής ή αντικατάστασης κάποιου αντ/κου που περιέχεται στο κατάλογο, εξαιτίας πρωτοβουλίας του κατασκευαστή του οχήματος.

Τα τεχνικά χαρακτηριστικά των προϊόντων ενδέχεται να διαφοροποιηθούν ανά πάσα στιγμή λόγο τεχνολογικών εξελίξεων.

Μερικοί κωδικοί αντ/κων μπορεί να μην είναι διαθέσιμοι σε κάποιες χώρες.

Οι παραγγελίες υπόκεινται στους γενικούς όρους πωλήσεων της Valeo.

Οι φωτογραφίες και τα σχέδια δεν είναι δεσμευτικά. Η αναπαραγωγή ολόκληρου ή τμήματος αυτού του καταλόγου απαγορεύεται να γίνει χωρίς τη ρητή και γραπτή άδεια της Valeo Service.

Valeo, your A/C Multi-specialist*

3 276429 556030

valeo added™

Automotive technology, naturally

Valeo

©2013 Valeo Service - Société par Actions Simplifiée - Capital 12.900.000 euros - 306 486 408 R.C.S. Bobigny - 70, rue Pleyel - 93200 Saint-Denis - France • Ref.955603 • Price : 5 euros
Non contractual pictures - Photos : Anders-olyy-minerva studio @shutterstock.com - Christian Schryve, Compiègne - Enjoy:) - 1001 Images - *Valeo, votre multispécialiste des systèmes de climatisation